UNITED STATES PATENT AND TRADEMARK OFFICE

UNITED STATES DEPARTMENT OF COMMERCE
United States Patent and Trademark Office
Address: COMMISSIONER FOR PATENTS
P.O. Box 1450
Alexandria, Virginia 22313-1450
www.uspto.gov

APPLICATION NO.	ISSUE DATE	PATENT NO.	ATTORNEY DOCKET NO.	CONFIRMATION NO.
13/346,355	02/18/2014	8650671	171401-1033	7392

24504 7590 01/29/2014
THOMAS | HORSTEMEYER, LLP
400 INTERSTATE NORTH PARKWAY SE
SUITE 1500
ATLANTA, GA 30339

ISSUE NOTIFICATION

The projected patent number and issue date are specified above.

Determination of Patent Term Adjustment under 35 U.S.C. 154 (b)
(application filed on or after May 29, 2000)

The Patent Term Adjustment is 0 day(s). Any patent to issue from the above-identified application will include an indication of the adjustment on the front page.

If a Continued Prosecution Application (CPA) was filed in the above-identified application, the filing date that determines Patent Term Adjustment is the filing date of the most recent CPA.

Applicant will be able to obtain more detailed information by accessing the Patent Application Information Retrieval (PAIR) WEB site (http://pair.uspto.gov).

Any questions regarding the Patent Term Extension or Adjustment determination should be directed to the Office of Patent Legal Administration at (571)-272-7702. Questions relating to issue and publication fee payments should be directed to the Application Assistance Unit (AAU) of the Office of Data Management (ODM) at (571)-272-4200.

APPLICANT(s) (Please see PAIR WEB site http://pair.uspto.gov for additional applicants):

Michael J. Schuster, Joliet, IL;
Larry Schneider, Wadsworth, IL;

The United States represents the largest, most dynamic marketplace in the world and is an unparalleled location for business investment, innovation, and commercialization of new technologies. The USA offers tremendous resources and advantages for those who invest and manufacture goods here. Through SelectUSA, our nation works to encourage and facilitate business investment. To learn more about why the USA is the best country in the world to develop technology, manufacture products, and grow your business, visit SelectUSA.gov.

IR103 (Rev. 10/09)

UNITED STATES PATENT AND TRADEMARK OFFICE

UNITED STATES DEPARTMENT OF COMMERCE
United States Patent and Trademark Office
Address: COMMISSIONER FOR PATENTS
P.O. Box 1450
Alexandria, Virginia 22313-1450
www.uspto.gov

APPLICATION NO.	FILING DATE	FIRST NAMED INVENTOR	ATTORNEY DOCKET NO.	CONFIRMATION NO.
13/346,355	01/09/2012	Michael J. Schuster	171401-1033	7392

24504 7590 01/16/2014
THOMAS | HORSTEMEYER, LLP
400 INTERSTATE NORTH PARKWAY SE
SUITE 1500
ATLANTA, GA 30339

EXAMINER
NGUYEN, TUAN N

ART UNIT	PAPER NUMBER
3751	

NOTIFICATION DATE	DELIVERY MODE
01/16/2014	ELECTRONIC

Please find below and/or attached an Office communication concerning this application or proceeding.

The time period for reply, if any, is set in the attached communication.

Notice of the Office communication was sent electronically on above-indicated "Notification Date" to the following e-mail address(es):

uspatents@tkhr.com
kristen.layton@tkhr.com
ozzie.liggins@tkhr.com

PTOL-90A (Rev. 04/07)

Response to Rule 312 Communication	Application No.	Applicant(s)
	13/346,355	SCHUSTER ET AL.
	Examiner	**Art Unit**
	TUAN N. NGUYEN	3751

-- The MAILING DATE of this communication appears on the cover sheet with the correspondence address --

1. ☒ The amendment filed on *02 January 2014* under 37 CFR 1.312 has been considered, and has been:

a) ☐ entered.

b) ☒ entered as directed to matters of form not affecting the scope of the invention.

c) ☐ disapproved because the amendment was filed after the payment of the issue fee.
Any amendment filed after the date the issue fee is paid must be accompanied by a petition under 37 CFR 1.313(c)(1) and the required fee to withdraw the application from issue.

d) ☐ disapproved. See explanation below.

e) ☐ entered in part. See explanation below.

/TUAN N NGUYEN/
Primary Examiner
Art Unit: 3751

Fluidmaster, Inc. - EX1009, Page 003
IPR2024-00633 (Fluidmaster Inc v. Danco Inc)

IN THE UNITED STATES PATENT AND TRADEMARK OFFICE

In re the application of: Confirmation: 7392

Schuster *et al.* Art Unit: 3751

Application Number: 13/346,355 Examiner: Nguyen, Tuan N.

Filing Date: January 09, 2012 Docket No.: 171401-1033

Title: **TOILET FILL VALVE WITH ADJUSTABLE BOWL FILL FLOW**

AMENDMENT AFTER ALLOWANCE OK TO ENTER: /T.N./ (01/09/2014)

Mail Stop: Issue Fee
P.O. Box 1450
Commissioner for Patents
Alexandria, Virginia 22313-1450

Sir:

Pursuant to 37 C.F.R. 1.312, please enter the following amendments. Applicant respectfully submits that the amendments herein embody merely the correction of formal matters and do not alter the scope or substance of the application.

It is believed that no extensions of time or fees for net addition of claims are required, beyond those which may otherwise be provided for in documents accompanying this paper. However, in the event that additional extensions of time are necessary to allow consideration of this paper, such extensions are hereby petitioned under 37 C.F.R. § 1.136(a), and any fees required therefor (including fees for net addition of claims) are hereby authorized to be charged to deposit account no. 20-0778.

PART B - FEE(S) TRANSMITTAL

Complete and send this form, together with applicable fee(s), to: Mail **Mail Stop ISSUE FEE**
Commissioner for Patents
P.O. Box 1450
Alexandria, Virginia 22313-1450
or Fax (571)-273-2885

INSTRUCTIONS: This form should be used for transmitting the ISSUE FEE and PUBLICATION FEE (if required). Blocks 1 through 5 should be completed where appropriate. All further correspondence including the Patent, advance orders and notification of maintenance fees will be mailed to the current correspondence address as indicated unless corrected below or directed otherwise in Block 1, by (a) specifying a new correspondence address; and/or (b) indicating a separate "FEE ADDRESS" for maintenance fee notifications.

CURRENT CORRESPONDENCE ADDRESS (Note: Use Block 1 for any change of address)

24504 7590 10/01/2013
THOMAS | HORSTEMEYER, LLP
400 INTERSTATE NORTH PARKWAY SE
SUITE 1500
ATLANTA, GA 30339

Note: A certificate of mailing can only be used for domestic mailings of the Fee(s) Transmittal. This certificate cannot be used for any other accompanying papers. Each additional paper, such as an assignment or formal drawing, must have its own certificate of mailing or transmission.

Certificate of Mailing or Transmission
I hereby certify that this Fee(s) Transmittal is being deposited with the United States Postal Service with sufficient postage for first class mail in an envelope addressed to the Mail Stop ISSUE FEE address above, or being facsimile transmitted to the USPTO (571) 273-2885, on the date indicated below.

(Depositor's name)
(Signature)
(Date)

APPLICATION NO.	FILING DATE	FIRST NAMED INVENTOR	ATTORNEY DOCKET NO.	CONFIRMATION NO.
13/346,355	01/09/2012	Michael J. Schuster	171401-1033	7392

TITLE OF INVENTION: Toilet Fill Valve with Adjustable Bowl Fill Flow

APPLN. TYPE	ENTITY STATUS	ISSUE FEE DUE	PUBLICATION FEE DUE	PREV. PAID ISSUE FEE	TOTAL FEE(S) DUE	DATE DUE
nonprovisional	~~SMALL~~ LARGE	~~$800~~ $960	$0	$0	~~$800~~ $960	01/02/2014

EXAMINER	ART UNIT	CLASS-SUBCLASS
NGUYEN, TUAN N	3751	004-415000

1. Change of correspondence address or indication of "Fee Address" (37 CFR 1.363).
- ☐ Change of correspondence address (or Change of Correspondence Address form PTO/SB/122) attached.
- ☐ "Fee Address" indication (or "Fee Address" Indication form PTO/SB/47; Rev 03-02 or more recent) attached. **Use of a Customer Number is required.**

2. For printing on the patent front page, list
(1) the names of up to 3 registered patent attorneys or agents OR, alternatively,
(2) the name of a single firm (having as a member a registered attorney or agent) and the names of up to 2 registered patent attorneys or agents. If no name is listed, no name will be printed.

1 Thomas | Horstemeyer, LLP
2
3

3. ASSIGNEE NAME AND RESIDENCE DATA TO BE PRINTED ON THE PATENT (print or type)

PLEASE NOTE: Unless an assignee is identified below, no assignee data will appear on the patent. If an assignee is identified below, the document has been filed for recordation as set forth in 37 CFR 3.11. Completion of this form is NOT a substitute for filing an assignment.

(A) NAME OF ASSIGNEE: Danco, Inc.
(B) RESIDENCE: (CITY and STATE OR COUNTRY): Irving, TX

Please check the appropriate assignee category or categories (will not be printed on the patent) : ☐ Individual ☒ Corporation or other private group entity ☐ Government

4a. The following fee(s) are submitted:
- ☒ Issue Fee
- ☐ Publication Fee (No small entity discount permitted)
- ☐ Advance Order - # of Copies _____

4b. Payment of Fee(s): **(Please first reapply any previously paid issue fee shown above)**
- ☐ A check is enclosed.
- ☒ Payment by credit card. ~~Form PTO-2038 is attached.~~
- ☒ The Director is hereby authorized to charge the required fee(s), any deficiency, or credit any overpayment, to Deposit Account Number 20-0778 (enclose an extra copy of this form).

PTOL-85 (Rev. 02/11)

Fluidmaster, Inc. - EX1009, Page 005
IPR2024-00633 (Fluidmaster Inc v. Danco Inc)

5. **Change in Entity Status** (from status indicated above)

☐ Applicant certifying micro entity status. See 37 CFR 1.29	NOTE: Absent a valid certification of Micro Entity Status (see form PTO/SB/15A and 15B), issue fee payment in the micro entity amount will not be accepted at the risk of application abandonment.
☐ Applicant asserting small entity status. See 37 CFR 1.27	NOTE: If the application was previously under micro entity status, checking this box will be taken to be a notification of loss of entitlement to micro entity status.
☒ Applicant changing to regular undiscounted fee status.	NOTE: Checking this box will be taken to be a notification of loss of entitlement to small or micro entity status, as applicable.

NOTE: The Issue Fee and Publication Fee (if required) will not be accepted from anyone other than the applicant; a registered attorney or agent; or the assignee or other party in interest as shown by the records of the United States Patent and Trademark Office.

Authorized Signature /RDG/ Date January 2, 2014

Typed or printed name Robert D. Gravois Registration No. 67,224

This collection of information is required by 37 CFR 1.311. The information is required to obtain or retain a benefit by the public which is to file (and by the USPTO to process) an application. Confidentiality is governed by 35 U.S.C. 122 and 37 CFR 1.14. This collection is estimated to take 12 minutes to complete, including gathering, preparing, and submitting the completed application form to the USPTO. Time will vary depending upon the individual case. Any comments on the amount of time you require to complete this form and/or suggestions for reducing this burden, should be sent to the Chief Information Officer, U.S. Patent and Trademark Office, U.S. Department of Commerce, P.O. Box 1450, Alexandria, Virginia 22313-1450. DO NOT SEND FEES OR COMPLETED FORMS TO THIS ADDRESS. SEND TO: Commissioner for Patents, P.O. Box 1450, Alexandria, Virginia 22313-1450.

Under the Paperwork Reduction Act of 1995, no persons are required to respond to a collection of information unless it displays a valid OMB control number.

Fluidmaster, Inc. - EX1009, Page 006
IPR2024-00633 (Fluidmaster Inc v. Danco Inc)

PATENT

IN THE UNITED STATES PATENT AND TRADEMARK OFFICE

In re the application of:	Confirmation: 7392
Schuster et al.	Art Unit: 3751
Application Number: 13/346,355	Examiner: Nguyen, Tuan N.
Filing Date: January 09, 2012	Docket No.: 171401-1033

Title: **TOILET FILL VALVE WITH ADJUSTABLE BOWL FILL FLOW**

COMMENTS ON STATEMENT OF REASONS FOR ALLOWANCE

Mail Stop Issue Fee
Commissioner for Patents
P.O. Box 1450
Alexandria, VA 22313-1450

Sir:

The attachments to the Notice of Allowability include some broad conclusory statements that may be viewed as an oversimplification of the examination issues, and if taken out of context, could give rise to an improper interpretation of the claims as well as the file history. For these reasons, Applicants provide the following comments.

First, Applicants assert that there are multiple grounds supporting allowance of the presently pending claims, including grounds in addition to those stated in the attachments to the Notice of Allowability. Accordingly, it should not be assumed that Applicants agree with the accuracy of the characterizations of the cited references and the claim elements in the attachments to the Notice of Allowability.

Second, in accordance with 35 U.S.C. Section 282: "Each claim of a patent (whether in independent, dependent, or multiple dependent form) shall be presumed valid independently of the validity of other claims; dependent or multiple dependent claims shall be presumed valid even though dependent upon an invalid claim." Thus, any dependent claims that are not addressed should not rise or fall, when construed in terms of validity, with their respective independent claims, but instead should be construed independently of their respective independent claims.

Third, the scope and validity of each claim (whether in independent, dependent, or multiple dependent form) should be determined based upon the entire combination of elements/features/steps in each claim, as opposed to only the particular feature or features pointed out by the attachments to the Notice of Allowability.

Respectfully submitted,

/RDG/
Robert D. Gravois
Registration No: 67,224

THOMAS | HORSTEMEYER, LLP
400 INTERSTATE NORTH PARKWAY, SUITE 1500
Atlanta, Georgia 30339-5948
Telephone: (770) 933-9500

IN THE UNITED STATES PATENT AND TRADEMARK OFFICE

In re the application of:	Confirmation: 7392
Schuster *et al.*	Art Unit: 3751
Application Number: 13/346,355	Examiner: Nguyen, Tuan N.
Filing Date: January 09, 2012	Docket No.: 171401-1033

Title: **TOILET FILL VALVE WITH ADJUSTABLE BOWL FILL FLOW**

AMENDMENT AFTER ALLOWANCE

Mail Stop: Issue Fee
P.O. Box 1450
Commissioner for Patents
Alexandria, Virginia 22313-1450

Sir:

Pursuant to 37 C.F.R. 1.312, please enter the following amendments. Applicant respectfully submits that the amendments herein embody merely the correction of formal matters and do not alter the scope or substance of the application.

It is believed that no extensions of time or fees for net addition of claims are required, beyond those which may otherwise be provided for in documents accompanying this paper. However, in the event that additional extensions of time are necessary to allow consideration of this paper, such extensions are hereby petitioned under 37 C.F.R. § 1.136(a), and any fees required therefor (including fees for net addition of claims) are hereby authorized to be charged to deposit account no. 20-0778.

Fluidmaster, Inc. - EX1009, Page 009
IPR2024-00633 (Fluidmaster Inc v. Danco Inc)

AMENDMENTS

IN THE SPECIFICATION

Please amend the specification as indicated below. The language being added is underlined ("__"), and the language being deleted contains strikethrough (" ") or is enclosed by double brackets ("[[ ]]").

Please replace the original abstract with the following new abstract:

ABSTRACT OF THE DISCLOSURE

Various embodiments are directed towards toilet fill valves with adjustable bowl fill flow. In one embodiment, a toilet fill valve includes a water inlet, a water outlet, a bowl fill outlet port, and a bowl fill valve. The bowl fill valve has an integrally molded portion that forms a bowl fill valve inlet port. The integrally molded portion of the bowl fill valve inserts into the bowl fill outlet port so that the bowl fill valve inlet port is coupled to the bowl fill outlet port.

Fluidmaster, Inc. - EX1009, Page 010
IPR2024-00633 (Fluidmaster Inc v. Danco Inc)

REMARKS

Applicant respectfully asserts that the foregoing amendments are not being submitted for purpose of delay and do not involve new matter. If, in the opinion of the Examiner, a telephonic conference would expedite entry of the foregoing amendments, the Examiner is invited to call the undersigned attorney at (770) 933-9500.

Respectfully submitted,

/RDG/

Robert D. Gravois, Reg. No.: 67,224

THOMAS | HORSTEMEYER, LLP
400 Interstate North Parkway
Suite 1500
Atlanta, Georgia 30339
(770) 933-9500

Fluidmaster, Inc. - EX1009, Page 011
IPR2024-00633 (Fluidmaster Inc v. Danco Inc)

Electronic Patent Application Fee Transmittal

Application Number:	13346355
Filing Date:	09-Jan-2012
Title of Invention:	Toilet Fill Valve with Adjustable Bowl Fill Flow
First Named Inventor/Applicant Name:	Michael J. Schuster
Filer:	Robert D. Gravois/Stephanie Davy-Jow
Attorney Docket Number:	171401-1033

Filed as Large Entity

Utility under 35 USC 111(a) Filing Fees

Description	Fee Code	Quantity	Amount	Sub-Total in USD($)
Basic Filing:				
Pages:				
Claims:				
Miscellaneous-Filing:				
Petition:				
Patent-Appeals-and-Interference:				
Post-Allowance-and-Post-Issuance:				
Utility Appl Issue Fee	1501	1	960	960
Extension-of-Time:				

Description	Fee Code	Quantity	Amount	Sub-Total in USD($)
Miscellaneous:				
		Total in USD ($)		**960**

Electronic Acknowledgement Receipt	
EFS ID:	17795614
Application Number:	13346355
International Application Number:	
Confirmation Number:	7392
Title of Invention:	Toilet Fill Valve with Adjustable Bowl Fill Flow
First Named Inventor/Applicant Name:	Michael J. Schuster
Customer Number:	24504
Filer:	Robert D. Gravois
Filer Authorized By:	
Attorney Docket Number:	171401-1033
Receipt Date:	02-JAN-2014
Filing Date:	09-JAN-2012
Time Stamp:	11:29:25
Application Type:	Utility under 35 USC 111(a)

Payment information:

Submitted with Payment	yes
Payment Type	Credit Card
Payment was successfully received in RAM	$960
RAM confirmation Number	11713
Deposit Account	200778
Authorized User	D'AURELIO, MICHAEL J

The Director of the USPTO is hereby authorized to charge indicated fees and credit any overpayment as follows:

Charge any Additional Fees required under 37 C.F.R. Section 1.20 (Post Issuance fees)

Charge any Additional Fees required under 37 C.F.R. Section 1.21 (Miscellaneous fees and charges)

File Listing:

Document Number	Document Description	File Name	File Size(Bytes)/ Message Digest	Multi Part /.zip	Pages (if appl.)
1	Issue Fee Payment (PTO-85B)	01921543.PDF	1036053 6216e2a962c03e5786a9f3def717abbda9d2ada1	no	2
Warnings:					
Information:					
2	Post Allowance Communication - Incoming	01953611.PDF	60010 d7b5633d516d670ac94b3d9ef1089b2e8afdaf4d	no	2
Warnings:					
Information:					
3	Amendment after Notice of Allowance (Rule 312)	01953610.PDF	87236 21b9319426f5d67bc7b0691e4369600264e60342	no	3
Warnings:					
Information:					
4	Fee Worksheet (SB06)	fee-info.pdf	30270 cba56acc62b9e4f1e4ce80d37495bda25f2dd243	no	2
Warnings:					
Information:					
		Total Files Size (in bytes):	1213569		

This Acknowledgement Receipt evidences receipt on the noted date by the USPTO of the indicated documents, characterized by the applicant, and including page counts, where applicable. It serves as evidence of receipt similar to a Post Card, as described in MPEP 503.

<u>New Applications Under 35 U.S.C. 111</u>
If a new application is being filed and the application includes the necessary components for a filing date (see 37 CFR 1.53(b)-(d) and MPEP 506), a Filing Receipt (37 CFR 1.54) will be issued in due course and the date shown on this Acknowledgement Receipt will establish the filing date of the application.

<u>National Stage of an International Application under 35 U.S.C. 371</u>
If a timely submission to enter the national stage of an international application is compliant with the conditions of 35 U.S.C. 371 and other applicable requirements a Form PCT/DO/EO/903 indicating acceptance of the application as a national stage submission under 35 U.S.C. 371 will be issued in addition to the Filing Receipt, in due course.

<u>New International Application Filed with the USPTO as a Receiving Office</u>
If a new international application is being filed and the international application includes the necessary components for an international filing date (see PCT Article 11 and MPEP 1810), a Notification of the International Application Number and of the International Filing Date (Form PCT/RO/105) will be issued in due course, subject to prescriptions concerning national security, and the date shown on this Acknowledgement Receipt will establish the international filing date of the application.

UNITED STATES PATENT AND TRADEMARK OFFICE

UNITED STATES DEPARTMENT OF COMMERCE
United States Patent and Trademark Office
Address: COMMISSIONER FOR PATENTS
P.O. Box 1450
Alexandria, Virginia 22313-1450
www.uspto.gov

APPLICATION NO.	FILING DATE	FIRST NAMED INVENTOR	ATTORNEY DOCKET NO.	CONFIRMATION NO.
13/346,355	01/09/2012	Michael J. Schuster	171401-1033	7392

24504 7590 11/27/2013
THOMAS | HORSTEMEYER, LLP
400 INTERSTATE NORTH PARKWAY SE
SUITE 1500
ATLANTA, GA 30339

EXAMINER
NGUYEN, TUAN N

ART UNIT	PAPER NUMBER
3751	

NOTIFICATION DATE	DELIVERY MODE
11/27/2013	ELECTRONIC

Please find below and/or attached an Office communication concerning this application or proceeding.

The time period for reply, if any, is set in the attached communication.

Notice of the Office communication was sent electronically on above-indicated "Notification Date" to the following e-mail address(es):

uspatents@tkhr.com
kristen.layton@tkhr.com
ozzie.liggins@tkhr.com

PTOL-90A (Rev. 04/07)

UNITED STATES DEPARTMENT OF COMMERCE
U.S. Patent and Trademark Office
Address : COMMISSIONER FOR PATENTS
P.O. Box 1450
Alexandria, Virginia 22313-1450

APPLICATION NO./ CONTROL NO.	FILING DATE	FIRST NAMED INVENTOR / PATENT IN REEXAMINATION	ATTORNEY DOCKET NO.
13/346,355	09 January, 2012	SCHUSTER ET AL.	171401-1033

		EXAMINER	
THOMAS | HORSTEMEYER, LLP 400 INTERSTATE NORTH PARKWAY SE SUITE 1500 ATLANTA, GA 30339		RICHARD ELLIS	
		ART UNIT	PAPER
		OPIM	A-98756

DATE MAILED:

Please find below and/or attached an Office communication concerning this application or proceeding.

Commissioner for Patents

The attached addendum forms part of the previously mailed PTOL-85 (Notice of Allowance and Fees Due). This addendum does NOT change the time period set in the PTOL-85 for payment of the issue fee.

ANY QUESTIONS REGARDING THIS COMMUNICATION SHOULD BE DIRECTED TO THE OFFICE OF PATENT LEGAL ADMINISTRATION AT (571) 272-7701.

PTO-90C (Rev.04-03)

Notices of Allowance and Fee(s) Due mailed between October 1, 2013 and December 31, 2013

(Addendum to PTOL-85)

If the "Notice of Allowance and Fee(s) Due" has a mailing date on or after October 1, 2013 and before January 1, 2014, the following information is applicable to this application.

If the issue fee is being timely paid on or after January 1, 2014, the amount due is the issue fee and publication fee in effect January 1, 2014. On January 1, 2014, the issue fees set forth in 37 CFR 1.18 decrease significantly and the publication fee set forth in 37 CFR 1.18(d)(1) decreases to $0.

If an issue fee or publication fee has been previously paid in this application, applicant is not entitled to a refund of the difference between the amount paid and the amount in effect on January 1, 2014.

UNITED STATES PATENT AND TRADEMARK OFFICE

UNITED STATES DEPARTMENT OF COMMERCE
United States Patent and Trademark Office
Address: COMMISSIONER FOR PATENTS
P.O. Box 1450
Alexandria, Virginia 22313-1450
www.uspto.gov

NOTICE OF ALLOWANCE AND FEE(S) DUE

24504 7590 10/01/2013
THOMAS | HORSTEMEYER, LLP
400 INTERSTATE NORTH PARKWAY SE
SUITE 1500
ATLANTA, GA 30339

EXAMINER
NGUYEN, TUAN N

ART UNIT	PAPER NUMBER
3751	

DATE MAILED: 10/01/2013

APPLICATION NO.	FILING DATE	FIRST NAMED INVENTOR	ATTORNEY DOCKET NO.	CONFIRMATION NO.
13/346,355	01/09/2012	Michael J. Schuster	171401-1033	7392

TITLE OF INVENTION: Toilet Fill Valve with Adjustable Bowl Fill Flow

APPLN. TYPE	ENTITY STATUS	ISSUE FEE DUE	PUBLICATION FEE DUE	PREV. PAID ISSUE FEE	TOTAL FEE(S) DUE	DATE DUE
nonprovisional	SMALL	$890	$0	$0	$890	01/02/2014

THE APPLICATION IDENTIFIED ABOVE HAS BEEN EXAMINED AND IS ALLOWED FOR ISSUANCE AS A PATENT. PROSECUTION ON THE MERITS IS CLOSED. THIS NOTICE OF ALLOWANCE IS NOT A GRANT OF PATENT RIGHTS. THIS APPLICATION IS SUBJECT TO WITHDRAWAL FROM ISSUE AT THE INITIATIVE OF THE OFFICE OR UPON PETITION BY THE APPLICANT. SEE 37 CFR 1.313 AND MPEP 1308.

THE ISSUE FEE AND PUBLICATION FEE (IF REQUIRED) MUST BE PAID WITHIN THREE MONTHS FROM THE MAILING DATE OF THIS NOTICE OR THIS APPLICATION SHALL BE REGARDED AS ABANDONED. THIS STATUTORY PERIOD CANNOT BE EXTENDED. SEE 35 U.S.C. 151. THE ISSUE FEE DUE INDICATED ABOVE DOES NOT REFLECT A CREDIT FOR ANY PREVIOUSLY PAID ISSUE FEE IN THIS APPLICATION. IF AN ISSUE FEE HAS PREVIOUSLY BEEN PAID IN THIS APPLICATION (AS SHOWN ABOVE), THE RETURN OF PART B OF THIS FORM WILL BE CONSIDERED A REQUEST TO REAPPLY THE PREVIOUSLY PAID ISSUE FEE TOWARD THE ISSUE FEE NOW DUE.

HOW TO REPLY TO THIS NOTICE:

I. Review the ENTITY STATUS shown above. If the ENTITY STATUS is shown as SMALL or MICRO, verify whether entitlement to that entity status still applies.

If the ENTITY STATUS is the same as shown above, pay the TOTAL FEE(S) DUE shown above.

If the ENTITY STATUS is changed from that shown above, on PART B - FEE(S) TRANSMITTAL, complete section number 5 titled "Change in Entity Status (from status indicated above)".

For purposes of this notice, small entity fees are 1/2 the amount of undiscounted fees, and micro entity fees are 1/2 the amount of small entity fees.

II. PART B - FEE(S) TRANSMITTAL, or its equivalent, must be completed and returned to the United States Patent and Trademark Office (USPTO) with your ISSUE FEE and PUBLICATION FEE (if required). If you are charging the fee(s) to your deposit account, section "4b" of Part B - Fee(s) Transmittal should be completed and an extra copy of the form should be submitted. If an equivalent of Part B is filed, a request to reapply a previously paid issue fee must be clearly made, and delays in processing may occur due to the difficulty in recognizing the paper as an equivalent of Part B.

III. All communications regarding this application must give the application number. Please direct all communications prior to issuance to Mail Stop ISSUE FEE unless advised to the contrary.

IMPORTANT REMINDER: Utility patents issuing on applications filed on or after Dec. 12, 1980 may require payment of maintenance fees. It is patentee's responsibility to ensure timely payment of maintenance fees when due.

PTOL-85 (Rev. 02/11)

Fluidmaster, Inc. - EX1009, Page 019
IPR2024-00633 (Fluidmaster Inc v. Danco Inc)

PART B - FEE(S) TRANSMITTAL

Complete and send this form, together with applicable fee(s), to: Mail **Mail Stop ISSUE FEE**
Commissioner for Patents
P.O. Box 1450
Alexandria, Virginia 22313-1450
or Fax (571)-273-2885

INSTRUCTIONS: This form should be used for transmitting the ISSUE FEE and PUBLICATION FEE (if required). Blocks 1 through 5 should be completed where appropriate. All further correspondence including the Patent, advance orders and notification of maintenance fees will be mailed to the current correspondence address as indicated unless corrected below or directed otherwise in Block 1, by (a) specifying a new correspondence address; and/or (b) indicating a separate "FEE ADDRESS" for maintenance fee notifications.

CURRENT CORRESPONDENCE ADDRESS (Note: Use Block 1 for any change of address)

24504 7590 10/01/2013
THOMAS | HORSTEMEYER, LLP
400 INTERSTATE NORTH PARKWAY SE
SUITE 1500
ATLANTA, GA 30339

Note: A certificate of mailing can only be used for domestic mailings of the Fee(s) Transmittal. This certificate cannot be used for any other accompanying papers. Each additional paper, such as an assignment or formal drawing, must have its own certificate of mailing or transmission.

Certificate of Mailing or Transmission

I hereby certify that this Fee(s) Transmittal is being deposited with the United States Postal Service with sufficient postage for first class mail in an envelope addressed to the Mail Stop ISSUE FEE address above, or being facsimile transmitted to the USPTO (571) 273-2885, on the date indicated below.

(Depositor's name)
(Signature)
(Date)

APPLICATION NO.	FILING DATE	FIRST NAMED INVENTOR	ATTORNEY DOCKET NO.	CONFIRMATION NO.
13/346,355	01/09/2012	Michael J. Schuster	171401-1033	7392

TITLE OF INVENTION: Toilet Fill Valve with Adjustable Bowl Fill Flow

APPLN. TYPE	ENTITY STATUS	ISSUE FEE DUE	PUBLICATION FEE DUE	PREV. PAID ISSUE FEE	TOTAL FEE(S) DUE	DATE DUE
nonprovisional	SMALL	$890	$0	$0	$890	01/02/2014

EXAMINER	ART UNIT	CLASS-SUBCLASS
NGUYEN, TUAN N	3751	004-415000

1. Change of correspondence address or indication of "Fee Address" (37 CFR 1.363).

❑ Change of correspondence address (or Change of Correspondence Address form PTO/SB/122) attached.

❑ "Fee Address" indication (or "Fee Address" Indication form PTO/SB/47; Rev 03-02 or more recent) attached. **Use of a Customer Number is required.**

2. For printing on the patent front page, list

(1) the names of up to 3 registered patent attorneys or agents OR, alternatively,

(2) the name of a single firm (having as a member a registered attorney or agent) and the names of up to 2 registered patent attorneys or agents. If no name is listed, no name will be printed.

1_____
2_____
3_____

3. ASSIGNEE NAME AND RESIDENCE DATA TO BE PRINTED ON THE PATENT (print or type)

PLEASE NOTE: Unless an assignee is identified below, no assignee data will appear on the patent. If an assignee is identified below, the document has been filed for recordation as set forth in 37 CFR 3.11. Completion of this form is NOT a substitute for filing an assignment.

(A) NAME OF ASSIGNEE (B) RESIDENCE: (CITY and STATE OR COUNTRY)

Please check the appropriate assignee category or categories (will not be printed on the patent) : ❑ Individual ❑ Corporation or other private group entity ❑ Government

4a. The following fee(s) are submitted:

❑ Issue Fee
❑ Publication Fee (No small entity discount permitted)
❑ Advance Order - # of Copies _____

4b. Payment of Fee(s): **(Please first reapply any previously paid issue fee shown above)**

❑ A check is enclosed.
❑ Payment by credit card. Form PTO-2038 is attached.
❑ The Director is hereby authorized to charge the required fee(s), any deficiency, or credit any overpayment, to Deposit Account Number _____ (enclose an extra copy of this form).

PTOL-85 (Rev. 02/11)

Fluidmaster, Inc. - EX1009, Page 020
IPR2024-00633 (Fluidmaster Inc v. Danco Inc)

5. **Change in Entity Status** (from status indicated above)

❑ Applicant certifying micro entity status. See 37 CFR 1.29	NOTE: Absent a valid certification of Micro Entity Status (see form PTO/SB/15A and 15B), issue fee payment in the micro entity amount will not be accepted at the risk of application abandonment.
❑ Applicant asserting small entity status. See 37 CFR 1.27	NOTE: If the application was previously under micro entity status, checking this box will be taken to be a notification of loss of entitlement to micro entity status.
❑ Applicant changing to regular undiscounted fee status.	NOTE: Checking this box will be taken to be a notification of loss of entitlement to small or micro entity status, as applicable.

NOTE: The Issue Fee and Publication Fee (if required) will not be accepted from anyone other than the applicant; a registered attorney or agent; or the assignee or other party in interest as shown by the records of the United States Patent and Trademark Office.

Authorized Signature _____ Date _____

Typed or printed name _____ Registration No. _____

This collection of information is required by 37 CFR 1.311. The information is required to obtain or retain a benefit by the public which is to file (and by the USPTO to process) an application. Confidentiality is governed by 35 U.S.C. 122 and 37 CFR 1.14. This collection is estimated to take 12 minutes to complete, including gathering, preparing, and submitting the completed application form to the USPTO. Time will vary depending upon the individual case. Any comments on the amount of time you require to complete this form and/or suggestions for reducing this burden, should be sent to the Chief Information Officer, U.S. Patent and Trademark Office, U.S. Department of Commerce, P.O. Box 1450, Alexandria, Virginia 22313-1450. DO NOT SEND FEES OR COMPLETED FORMS TO THIS ADDRESS. SEND TO: Commissioner for Patents, P.O. Box 1450, Alexandria, Virginia 22313-1450.

Under the Paperwork Reduction Act of 1995, no persons are required to respond to a collection of information unless it displays a valid OMB control number.

Fluidmaster, Inc. - EX1009, Page 021
IPR2024-00633 (Fluidmaster Inc v. Danco Inc)

UNITED STATES PATENT AND TRADEMARK OFFICE

UNITED STATES DEPARTMENT OF COMMERCE
United States Patent and Trademark Office
Address: COMMISSIONER FOR PATENTS
P.O. Box 1450
Alexandria, Virginia 22313-1450
www.uspto.gov

APPLICATION NO.	FILING DATE	FIRST NAMED INVENTOR	ATTORNEY DOCKET NO.	CONFIRMATION NO.
13/346,355	01/09/2012	Michael J. Schuster	171401-1033	7392

24504 7590 10/01/2013
THOMAS | HORSTEMEYER, LLP
400 INTERSTATE NORTH PARKWAY SE
SUITE 1500
ATLANTA, GA 30339

EXAMINER
NGUYEN, TUAN N

ART UNIT	PAPER NUMBER
3751	

DATE MAILED: 10/01/2013

Determination of Patent Term Adjustment under 35 U.S.C. 154 (b)
(application filed on or after May 29, 2000)

The Patent Term Adjustment to date is 0 day(s). If the issue fee is paid on the date that is three months after the mailing date of this notice and the patent issues on the Tuesday before the date that is 28 weeks (six and a half months) after the mailing date of this notice, the Patent Term Adjustment will be 0 day(s).

If a Continued Prosecution Application (CPA) was filed in the above-identified application, the filing date that determines Patent Term Adjustment is the filing date of the most recent CPA.

Applicant will be able to obtain more detailed information by accessing the Patent Application Information Retrieval (PAIR) WEB site (http://pair.uspto.gov).

Any questions regarding the Patent Term Extension or Adjustment determination should be directed to the Office of Patent Legal Administration at (571)-272-7702. Questions relating to issue and publication fee payments should be directed to the Customer Service Center of the Office of Patent Publication at 1-(888)-786-0101 or (571)-272-4200.

PTOL-85 (Rev. 02/11)

Privacy Act Statement

The Privacy Act of 1974 (P.L. 93-579) requires that you be given certain information in connection with your submission of the attached form related to a patent application or patent. Accordingly, pursuant to the requirements of the Act, please be advised that: (1) the general authority for the collection of this information is 35 U.S.C. 2(b)(2); (2) furnishing of the information solicited is voluntary; and (3) the principal purpose for which the information is used by the U.S. Patent and Trademark Office is to process and/or examine your submission related to a patent application or patent. If you do not furnish the requested information, the U.S. Patent and Trademark Office may not be able to process and/or examine your submission, which may result in termination of proceedings or abandonment of the application or expiration of the patent.

The information provided by you in this form will be subject to the following routine uses:

1. The information on this form will be treated confidentially to the extent allowed under the Freedom of Information Act (5 U.S.C. 552) and the Privacy Act (5 U.S.C 552a). Records from this system of records may be disclosed to the Department of Justice to determine whether disclosure of these records is required by the Freedom of Information Act.
2. A record from this system of records may be disclosed, as a routine use, in the course of presenting evidence to a court, magistrate, or administrative tribunal, including disclosures to opposing counsel in the course of settlement negotiations.
3. A record in this system of records may be disclosed, as a routine use, to a Member of Congress submitting a request involving an individual, to whom the record pertains, when the individual has requested assistance from the Member with respect to the subject matter of the record.
4. A record in this system of records may be disclosed, as a routine use, to a contractor of the Agency having need for the information in order to perform a contract. Recipients of information shall be required to comply with the requirements of the Privacy Act of 1974, as amended, pursuant to 5 U.S.C. 552a(m).
5. A record related to an International Application filed under the Patent Cooperation Treaty in this system of records may be disclosed, as a routine use, to the International Bureau of the World Intellectual Property Organization, pursuant to the Patent Cooperation Treaty.
6. A record in this system of records may be disclosed, as a routine use, to another federal agency for purposes of National Security review (35 U.S.C. 181) and for review pursuant to the Atomic Energy Act (42 U.S.C. 218(c)).
7. A record from this system of records may be disclosed, as a routine use, to the Administrator, General Services, or his/her designee, during an inspection of records conducted by GSA as part of that agency's responsibility to recommend improvements in records management practices and programs, under authority of 44 U.S.C. 2904 and 2906. Such disclosure shall be made in accordance with the GSA regulations governing inspection of records for this purpose, and any other relevant (i.e., GSA or Commerce) directive. Such disclosure shall not be used to make determinations about individuals.
8. A record from this system of records may be disclosed, as a routine use, to the public after either publication of the application pursuant to 35 U.S.C. 122(b) or issuance of a patent pursuant to 35 U.S.C. 151. Further, a record may be disclosed, subject to the limitations of 37 CFR 1.14, as a routine use, to the public if the record was filed in an application which became abandoned or in which the proceedings were terminated and which application is referenced by either a published application, an application open to public inspection or an issued patent.
9. A record from this system of records may be disclosed, as a routine use, to a Federal, State, or local law enforcement agency, if the USPTO becomes aware of a violation or potential violation of law or regulation.

Notice of Allowability	Application No.	Applicant(s)	
	13/346,355	SCHUSTER ET AL.	
	Examiner	Art Unit	
	TUAN N. NGUYEN	3751	

-- The MAILING DATE of this communication appears on the cover sheet with the correspondence address--

All claims being allowable, PROSECUTION ON THE MERITS IS (OR REMAINS) CLOSED in this application. If not included herewith (or previously mailed), a Notice of Allowance (PTOL-85) or other appropriate communication will be mailed in due course. **THIS NOTICE OF ALLOWABILITY IS NOT A GRANT OF PATENT RIGHTS.** This application is subject to withdrawal from issue at the initiative of the Office or upon petition by the applicant. See 37 CFR 1.313 and MPEP 1308.

1. ☒ This communication is responsive to *the amendment filed 8/2/13*.

2. ☒ The allowed claim(s) is/are *1-20*.

3. ☐ Acknowledgment is made of a claim for foreign priority under 35 U.S.C. § 119(a)-(d) or (f).
   a) ☐ All b) ☐ Some* c) ☐ None of the:
      1. ☐ Certified copies of the priority documents have been received.
      2. ☐ Certified copies of the priority documents have been received in Application No. _____ .
      3. ☐ Copies of the certified copies of the priority documents have been received in this national stage application from the International Bureau (PCT Rule 17.2(a)).

   * Certified copies not received: _____.

Applicant has THREE MONTHS FROM THE "MAILING DATE" of this communication to file a reply complying with the requirements noted below. Failure to timely comply will result in ABANDONMENT of this application.
THIS THREE-MONTH PERIOD IS NOT EXTENDABLE.

4. ☐ A SUBSTITUTE OATH OR DECLARATION must be submitted. Note the attached EXAMINER'S AMENDMENT or NOTICE OF INFORMAL PATENT APPLICATION (PTO-152) which gives reason(s) why the oath or declaration is deficient.

5. ☐ CORRECTED DRAWINGS (as "replacement sheets") must be submitted.
   (a) ☐ including changes required by the Notice of Draftsperson's Patent Drawing Review (PTO-948) attached
      1) ☐ hereto or 2) ☐ to Paper No./Mail Date _____.
   (b) ☐ including changes required by the attached Examiner's Amendment / Comment or in the Office action of Paper No./Mail Date _____.

   Identifying indicia such as the application number (see 37 CFR 1.84(c)) should be written on the drawings in the front (not the back) of each sheet. Replacement sheet(s) should be labeled as such in the header according to 37 CFR 1.121(d).

6. ☐ DEPOSIT OF and/or INFORMATION about the deposit of BIOLOGICAL MATERIAL must be submitted. Note the attached Examiner's comment regarding REQUIREMENT FOR THE DEPOSIT OF BIOLOGICAL MATERIAL.

Attachment(s)

1. ☐ Notice of References Cited (PTO-892)
2. ☐ Notice of Draftperson's Patent Drawing Review (PTO-948)
3. ☐ Information Disclosure Statements (PTO/SB/08), Paper No./Mail Date _____
4. ☐ Examiner's Comment Regarding Requirement for Deposit of Biological Material
5. ☐ Notice of Informal Patent Application
6. ☒ Interview Summary (PTO-413), Paper No./Mail Date *attached* .
7. ☒ Examiner's Amendment/Comment
8. ☐ Examiner's Statement of Reasons for Allowance
9. ☐ Other _____.

Fluidmaster, Inc. - EX1009, Page 024
IPR2024-00633 (Fluidmaster Inc v. Danco Inc)

The present application is being examined under the pre-AIA first to invent provisions.

EXAMINER'S AMENDMENT

An examiner's amendment to the record appears below. Should the changes and/or additions be unacceptable to applicant, an amendment may be filed as provided by 37 CFR 1.312. To ensure consideration of such an amendment, it MUST be submitted no later than the payment of the issue fee.

Authorization for this examiner's amendment was given in a telephone interview with Mr. Robert Gravois on 9/24/13.

The application has been amended as follows:

In claim 16 (patent claim 16),

line 12: "integrally portion" has been changed to --integrally molded portion--; and

line 13: "configured to" has been changed to --configured to insert into and--.

Any inquiry concerning this communication or earlier communications from the examiner should be directed to TUAN N. NGUYEN whose telephone number is (571)272-4892. The examiner can normally be reached on Monday to Friday between 10am-6pm.

If attempts to reach the examiner by telephone are unsuccessful, the examiner's supervisor, Greg Huson can be reached on (571)272-4887. The fax phone number for the organization where this application or proceeding is assigned is 571-273-8300.

Information regarding the status of an application may be obtained from the Patent Application Information Retrieval (PAIR) system. Status information for published applications may be obtained from either Private PAIR or Public PAIR. Status information for unpublished applications is available through Private PAIR only. For more information about the PAIR system, see http://pair-direct.uspto.gov. Should you have questions on access to the Private PAIR system, contact the Electronic Business Center (EBC) at 866-217-9197 (toll-free). If you would like assistance from a USPTO Customer Service Representative or access to the automated information system, call 800-786-9199 (IN USA OR CANADA) or 571-272-1000.

/TUAN N NGUYEN/
Primary Examiner
Art Unit 3751

Examiner-Initiated Interview Summary	Application No.	Applicant(s)	
	13/346,355	SCHUSTER ET AL.	
	Examiner	Art Unit	
	TUAN N. NGUYEN	3751	

All participants (applicant, applicant's representative, PTO personnel):

(1) *TUAN N. NGUYEN*. (3)_____.

(2) *ROBERT GRAVOIS*. (4)_____.

Date of Interview: *24 September 2013*.

Type: ☒ Telephonic ☐ Video Conference
☐ Personal [copy given to: ☐ applicant ☐ applicant's representative]

Exhibit shown or demonstration conducted: ☐ Yes ☒ No.
If Yes, brief description: _____.

Issues Discussed ☐101 ☐112 ☒102 ☐103 ☒Others
(For each of the checked box(es) above, please describe below the issue and detailed description of the discussion)

Claim(s) discussed: *16*.

Identification of prior art discussed: *DeMarco*.

Substance of Interview
(For each issue discussed, provide a detailed description and indicate if agreement was reached. Some topics may include: identification or clarification of a reference or a portion thereof, claim interpretation, proposed amendments, arguments of any applied references etc...)

It was agreed to amend claim 16 as indicated in the attached Examiner's Amendment to avoid the application of prior art and expedite the prosecution of this case..

Applicant recordation instructions: It is not necessary for applicant to provide a separate record of the substance of interview.

Examiner recordation instructions: Examiners must summarize the substance of any interview of record. A complete and proper recordation of the substance of an interview should include the items listed in MPEP 713.04 for complete and proper recordation including the identification of the general thrust of each argument or issue discussed, a general indication of any other pertinent matters discussed regarding patentability and the general results or outcome of the interview, to include an indication as to whether or not agreement was reached on the issues raised.

☐ Attachment

Fluidmaster, Inc. - EX1009, Page 027
IPR2024-00633 (Fluidmaster Inc v. Danco Inc)

UNITED STATES PATENT AND TRADEMARK OFFICE

UNITED STATES DEPARTMENT OF COMMERCE
United States Patent and Trademark Office
Address: COMMISSIONER FOR PATENTS
P.O. Box 1450
Alexandria, Virginia 22313-1450
www.uspto.gov

BIB DATA SHEET

CONFIRMATION NO. 7392

SERIAL NUMBER	FILING or 371(c) DATE	CLASS	GROUP ART UNIT	ATTORNEY DOCKET NO.
13/346,355	01/09/2012 **RULE**	004	3751	171401-1033

APPLICANTS

Michael J. Schuster, Joliet, IL;
Larry Schneider, Wadsworth, IL;

**** CONTINUING DATA ****************************

This application is a CON of 12/786,904 05/25/2010 PAT 8104105 *
which is a CON of 10/958,797 10/05/2004 PAT 7743436
which is a CIP of 10/798,606 03/11/2004 PAT 6823889
(*)Data provided by applicant is not consistent with PTO records.

**** FOREIGN APPLICATIONS ****************************

**** IF REQUIRED, FOREIGN FILING LICENSE GRANTED **** ** SMALL ENTITY **
01/19/2012

			STATE OR COUNTRY	SHEETS DRAWINGS	TOTAL CLAIMS	INDEPENDENT CLAIMS
Foreign Priority claimed ☐ Yes ☑ No 35 USC 119(a-d) conditions met ☐ Yes ☑ No Verified and Acknowledged /TUAN N NGUYEN/ Examiner's Signature		☐ Met after Allowance Initials	IL	9	15	2

ADDRESS

THOMAS | HORSTEMEYER, LLP
400 INTERSTATE NORTH PARKWAY SE
SUITE 1500
ATLANTA, GA 30339
UNITED STATES

TITLE

Toilet Fill Valve with Adjustable Bowl Fill Flow

FILING FEE RECEIVED 595	FEES: Authority has been given in Paper No._____ to charge/credit DEPOSIT ACCOUNT No._____ for following:	☐ All Fees ☐ 1.16 Fees (Filing) ☐ 1.17 Fees (Processing Ext. of time) ☐ 1.18 Fees (Issue) ☐ Other _____ ☐ Credit

Issue Classification	**Application/Control No.** 13346355	**Applicant(s)/Patent Under Reexamination** SCHUSTER ET AL.
	Examiner TUAN N NGUYEN	**Art Unit** 3751

CPC				
Symbol			**Type**	**Version**
	/			
	/			
	/			
	/			
	/			
	/			
	/			
	/			
	/			
	/			
	/			
	/			
	/			
	/			
	/			

CPC Combination Sets						
Symbol			**Type**	**Set**	**Ranking**	**Version**
	/					
	/					

NONE (Assistant Examiner)	(Date)	**Total Claims Allowed:** 20	
/TUAN N NGUYEN/ Primary Examiner.Art Unit 3751 (Primary Examiner)	9/25/13 (Date)	O.G. Print Claim(s) 1	O.G. Print Figure 4 & 5B

Fluidmaster, Inc. - EX1009, Page 029
IPR2024-00633 (Fluidmaster Inc v. Danco Inc)

Issue Classification	Application/Control No.	Applicant(s)/Patent Under Reexamination
	13346355	SCHUSTER ET AL.
	Examiner	**Art Unit**
	TUAN N NGUYEN	3751

US ORIGINAL CLASSIFICATION		INTERNATIONAL CLASSIFICATION	
CLASS	SUBCLASS	CLAIMED	NON-CLAIMED
4	415	E 0 3 D 1 / 00 (2006.01.01)	

CROSS REFERENCE(S)

CLASS	SUBCLASS (ONE SUBCLASS PER BLOCK)				
4	324				
137	441				

NONE	Total Claims Allowed:
(Assistant Examiner) (Date)	20
/TUAN N NGUYEN/ Primary Examiner.Art Unit 3751 9/25/13	O.G. Print Claim(s) 1 / O.G. Print Figure 4 & 5B
(Primary Examiner) (Date)	

Issue Classification	Application/Control No.	Applicant(s)/Patent Under Reexamination
	13346355	SCHUSTER ET AL.
	Examiner	**Art Unit**
	TUAN N NGUYEN	3751

☒ **Claims renumbered in the same order as presented by applicant** ☐ **CPA** ☐ **T.D.** ☐ **R.1.47**

Final	Original	Final	Original	Final	Original	Final	Original	Final	Original	Final	Original	Final	Original	Final	Original

NONE (Assistant Examiner) (Date)		**Total Claims Allowed:** 20	
/TUAN N NGUYEN/ Primary Examiner.Art Unit 3751 (Primary Examiner)	9/25/13 (Date)	O.G. Print Claim(s) 1	O.G. Print Figure 4 & 5B

U.S. Patent and Trademark Office Part of Paper No. 20130924

Search Notes	Application/Control No.	Applicant(s)/Patent Under Reexamination
	13346355	SCHUSTER ET AL.
	Examiner	**Art Unit**
	TUAN N NGUYEN	3751

CPC- SEARCHED		
Symbol	**Date**	**Examiner**

CPC COMBINATION SETS - SEARCHED		
Symbol	**Date**	**Examiner**

US CLASSIFICATION SEARCHED			
Class	**Subclass**	**Date**	**Examiner**
4	331,324,366,415,675	7/2/12	TN
137	15.26,432,434,436,437,441-444	7/2/12	TN
285	91	7/2/12	TN
above updated		9/24/13	TN

SEARCH NOTES		
Search Notes	**Date**	**Examiner**
EAST BRS TEXT SEARCH ATTACHED	9/24/13	TN

INTERFERENCE SEARCH			
US Class/ CPC Symbol	**US Subclass / CPC Group**	**Date**	**Examiner**
USPGPUB	INTERFERENCE TEXT SEARCH ATTACHED	9/24/13	TN

Fluidmaster, Inc. - EX1009, Page 032
IPR2024-00633 (Fluidmaster Inc v. Danco Inc)

PTO/SB/30EFS (07-09)
Approved for use through 07/31/2012. OMB 0651-0031
U.S. Patent and Trademark Office; U.S. DEPARTMENT OF COMMERCE
Under the Paperwork Reduction Act of 1995, no persons are required to respond to a collection of information unless it contains a valid OMB control number.

REQUEST FOR CONTINUED EXAMINATION(RCE)TRANSMITTAL
(Submitted Only via EFS-Web)

Application Number	13346355	Filing Date	2012-01-09	Docket Number (if applicable)	171401-1033	Art Unit	3751
First Named Inventor	Michael J. Schuster			Examiner Name	Nguyen, Tuan N.		

This is a Request for Continued Examination (RCE) under 37 CFR 1.114 of the above-identified application.
Request for Continued Examination (RCE) practice under 37 CFR 1.114 does not apply to any utility or plant application filed prior to June 8, 1995, or to any design application. The Instruction Sheet for this form is located at WWW.USPTO.GOV

SUBMISSION REQUIRED UNDER 37 CFR 1.114

Note: If the RCE is proper, any previously filed unentered amendments and amendments enclosed with the RCE will be entered in the order in which they were filed unless applicant instructs otherwise. If applicant does not wish to have any previously filed unentered amendment(s) entered, applicant must request non-entry of such amendment(s).

☐ Previously submitted. If a final Office action is outstanding, any amendments filed after the final Office action may be considered as a submission even if this box is not checked.

- ☐ Consider the arguments in the Appeal Brief or Reply Brief previously filed on _____
- ☐ Other _____

☒ Enclosed

- ☒ Amendment/Reply
- ☐ Information Disclosure Statement (IDS)
- ☐ Affidavit(s)/ Declaration(s)
- ☐ Other _____

MISCELLANEOUS

☐ Suspension of action on the above-identified application is requested under 37 CFR 1.103(c) for a period of months _____
(Period of suspension shall not exceed 3 months; Fee under 37 CFR 1.17(i) required)

☐ Other _____

FEES

☒ **The RCE fee under 37 CFR 1.17(e) is required by 37 CFR 1.114 when the RCE is filed.**
The Director is hereby authorized to charge any underpayment of fees, or credit any overpayments, to
Deposit Account No 200778

SIGNATURE OF APPLICANT, ATTORNEY, OR AGENT REQUIRED

☒ Patent Practitioner Signature
☐ Applicant Signature

PTO/SB/30EFS (07-09)
Approved for use through 07/31/2012. OMB 0651-0031
U.S. Patent and Trademark Office; U.S. DEPARTMENT OF COMMERCE
Under the Paperwork Reduction Act of 1995, no persons are required to respond to a collection of information unless it contains a valid OMB control number.

Signature of Registered U.S. Patent Practitioner			
Signature	/RDG/	Date (YYYY-MM-DD)	2013-08-02
Name	/Robert D. Gravois/	Registration Number	67224

This collection of information is required by 37 CFR 1.114. The information is required to obtain or retain a benefit by the public which is to file (and by the USPTO to process) an application. Confidentiality is governed by 35 U.S.C. 122 and 37 CFR 1.11 and 1.14. This collection is estimated to take 12 minutes to complete, including gathering, preparing, and submitting the completed application form to the USPTO. Time will vary depending upon the individual case. Any comments on the amount of time you require to complete this form and/or suggestions for reducing this burden, should be sent to the Chief Information Officer, U.S. Patent and Trademark Office, U.S. Department of Commerce, P.O. Box 1450, Alexandria, VA 22313-1450.

If you need assistance in completing the form, call 1-800-PTO-9199 and select option 2.

Privacy Act Statement

The Privacy Act of 1974 (P.L. 93-579) requires that you be given certain information in connection with your submission of the attached form related to a patent application or patent. Accordingly, pursuant to the requirements of the Act, please be advised that: (1) the general authority for the collection of this information is 35 U.S.C. 2(b)(2); (2) furnishing of the information solicited is voluntary; and (3) the principal purpose for which the information is used by the U.S. Patent and Trademark Office is to process and/or examine your submission related to a patent application or patent. If you do not furnish the requested information, the U.S. Patent and Trademark Office may not be able to process and/or examine your submission, which may result in termination of proceedings or abandonment of the application or expiration of the patent.

The information provided by you in this form will be subject to the following routine uses:

1. The information on this form will be treated confidentially to the extent allowed under the Freedom of Information Act (5 U.S.C. 552) and the Privacy Act (5 U.S.C. 552a). Records from this system of records may be disclosed to the Department of Justice to determine whether the Freedom of Information Act requires disclosure of these records.

2. A record from this system of records may be disclosed, as a routine use, in the course of presenting evidence to a court, magistrate, or administrative tribunal, including disclosures to opposing counsel in the course of settlement negotiations.

3. A record in this system of records may be disclosed, as a routine use, to a Member of Congress submitting a request involving an individual, to whom the record pertains, when the individual has requested assistance from the Member with respect to the subject matter of the record.

4. A record in this system of records may be disclosed, as a routine use, to a contractor of the Agency having need for the information in order to perform a contract. Recipients of information shall be required to comply with the requirements of the Privacy Act of 1974, as amended, pursuant to 5 U.S.C. 552a(m).

5. A record related to an International Application filed under the Patent Cooperation Treaty in this system of records may be disclosed, as a routine use, to the International Bureau of the World Intellectual Property Organization, pursuant to the Patent Cooperation Treaty.

6. A record in this system of records may be disclosed, as a routine use, to another federal agency for purposes of National Security review (35 U.S.C. 181) and for review pursuant to the Atomic Energy Act (42 U.S.C. 218(c)).

7. A record from this system of records may be disclosed, as a routine use, to the Administrator, General Services, or his/her designee, during an inspection of records conducted by GSA as part of that agency's responsibility to recommend improvements in records management practices and programs, under authority of 44 U.S.C. 2904 and 2906. Such disclosure shall be made in accordance with the GSA regulations governing inspection of records for this purpose, and any other relevant (i.e., GSA or Commerce) directive. Such disclosure shall not be used to make determinations about individuals.

8. A record from this system of records may be disclosed, as a routine use, to the public after either publication of the application pursuant to 35 U.S.C. 122(b) or issuance of a patent pursuant to 35 U.S.C. 151. Further, a record may be disclosed, subject to the limitations of 37 CFR 1.14, as a routine use, to the public if the record was filed in an application which became abandoned or in which the proceedings were terminated and which application is referenced by either a published application, an application open to public inspections or an issued patent.

9. A record from this system of records may be disclosed, as a routine use, to a Federal, State, or local law enforcement agency, if the USPTO becomes aware of a violation or potential violation of law or regulation.

Electronic Patent Application Fee Transmittal

Application Number:	13346355
Filing Date:	09-Jan-2012
Title of Invention:	Toilet Fill Valve with Adjustable Bowl Fill Flow
First Named Inventor/Applicant Name:	Michael J. Schuster
Filer:	Robert D. Gravois/Stephanie Davy-Jow
Attorney Docket Number:	171401-1033

Filed as Large Entity

Utility under 35 USC 111(a) Filing Fees

Description	Fee Code	Quantity	Amount	Sub-Total in USD($)
Basic Filing:				
Pages:				
Claims:				
Miscellaneous-Filing:				
Petition:				
Patent-Appeals-and-Interference:				
Post-Allowance-and-Post-Issuance:				
Extension-of-Time:				
Extension - 3 months with $0 paid	1253	1	1400	1400

Description	Fee Code	Quantity	Amount	Sub-Total in USD($)
Miscellaneous:				
Request for Continued Examination	1801	1	1200	1200
		Total in USD ($)		**2600**

Electronic Acknowledgement Receipt	
EFS ID:	16490503
Application Number:	13346355
International Application Number:	
Confirmation Number:	7392
Title of Invention:	Toilet Fill Valve with Adjustable Bowl Fill Flow
First Named Inventor/Applicant Name:	Michael J. Schuster
Customer Number:	24504
Filer:	Robert D. Gravois/Stephanie Davy-Jow
Filer Authorized By:	Robert D. Gravois
Attorney Docket Number:	171401-1033
Receipt Date:	02-AUG-2013
Filing Date:	09-JAN-2012
Time Stamp:	16:00:28
Application Type:	Utility under 35 USC 111(a)

Payment information:

Submitted with Payment	yes
Payment Type	Credit Card
Payment was successfully received in RAM	$2600
RAM confirmation Number	2656
Deposit Account	200778
Authorized User	D'AURELIO, MICHAEL J
The Director of the USPTO is hereby authorized to charge indicated fees and credit any overpayment as follows:	
Charge any Additional Fees required under 37 C.F.R. Section 1.21 (Miscellaneous fees and charges)	

File Listing:

Document Number	Document Description	File Name	File Size(Bytes)/ Message Digest	Multi Part /.zip	Pages (if appl.)
1	Amendment Submitted/Entered with Filing of CPA/RCE	01880362.PDF	104538 1c17923f1da9fa552e57e3205e1b47cb522c4d34	no	14
Warnings:					
Information:					
2	Extension of Time	01880227.PDF	152114 1a543ae6f86a38db7f3e6b42eaaedc88a7076290	no	2
Warnings:					
Information:					
3	Request for Continued Examination (RCE)	01880216.PDF	700042 e7ad4f3c4048226b92ddb34fd9d965937c6c7a66	no	3
Warnings:					
Information:					
4	Fee Worksheet (SB06)	fee-info.pdf	32409 8fe6470a8d26b4653147bef8c240b157a14f3e17	no	2
Warnings:					
Information:					
		Total Files Size (in bytes):	989103		

This Acknowledgement Receipt evidences receipt on the noted date by the USPTO of the indicated documents, characterized by the applicant, and including page counts, where applicable. It serves as evidence of receipt similar to a Post Card, as described in MPEP 503.

<u>New Applications Under 35 U.S.C. 111</u>
If a new application is being filed and the application includes the necessary components for a filing date (see 37 CFR 1.53(b)-(d) and MPEP 506), a Filing Receipt (37 CFR 1.54) will be issued in due course and the date shown on this Acknowledgement Receipt will establish the filing date of the application.

<u>National Stage of an International Application under 35 U.S.C. 371</u>
If a timely submission to enter the national stage of an international application is compliant with the conditions of 35 U.S.C. 371 and other applicable requirements a Form PCT/DO/EO/903 indicating acceptance of the application as a national stage submission under 35 U.S.C. 371 will be issued in addition to the Filing Receipt, in due course.

<u>New International Application Filed with the USPTO as a Receiving Office</u>
If a new international application is being filed and the international application includes the necessary components for an international filing date (see PCT Article 11 and MPEP 1810), a Notification of the International Application Number and of the International Filing Date (Form PCT/RO/105) will be issued in due course, subject to prescriptions concerning national security, and the date shown on this Acknowledgement Receipt will establish the international filing date of the application.

IN THE UNITED STATES PATENT AND TRADEMARK OFFICE

In re the application of:	Confirmation: 7392
Schuster *et al.*	Art Unit: 3751
Application Number: 13/346,355	Examiner: Nguyen, Tuan N
Filing Date: January 09, 2012	Docket No.: 171401-1033

Title: **TOILET FILL VALVE WITH ADJUSTABLE BOWL FILL FLOW**

RCE AND RESPONSE TO FINAL OFFICE ACTION OF FEBRUARY 04, 2013

Mail Stop: RCE
Commissioner for Patents
P.O. Box 1450
Alexandria, VA 22313-1450

Sir:

With respect to the outstanding final Office Action dated February 4, 2013, the following Response is submitted.

It is believed that no extensions of time or fees for net addition of claims are required, beyond those that may otherwise be provided for in documents accompanying this paper. However, in the event that additional extensions of time are necessary to allow consideration of this paper, such extensions are hereby petitioned under 37 C.F.R. § 1.136(a), and any fees required therefor (including fees for net addition of claims) are hereby authorized to be charged to Deposit Account No. 20-0778.

REQUEST FOR CONTINUED EXAMINATION

In accordance with 37 C.F.R. § 1.114, a Request for Continued Examination (RCE) is filed concurrently with this response. The effect of the RCE is to cause examination of the instant application to remain open. Accordingly, amendments and new claims submitted herein are to be entered as a matter of right, and each claim is entitled to continue examination.

IN THE CLAIMS:

Please amend the claims as indicated below. The language being added is underlined ("__"), and the language being deleted contains a double strikethrough ("–") or double brackets ("[[ ]]").

1. (Currently Amended) A toilet fill valve, comprising:

a water inlet;

a ~~first~~ water outlet configured to supply water to a toilet tank;

a bowl fill outlet port radially extending from a portion of a body of the toilet fill valve, the bowl fill outlet port being operatively coupled to the water inlet, and the bowl fill outlet port ~~comprising~~ being an integrally molded portion of the body of the toilet fill valve;

a bowl fill valve having a first integrally molded portion that forms a bowl fill valve inlet port ~~and~~, the bowl fill valve having a second integrally molded portion that forms a bowl fill valve outlet port, wherein ~~the bowl fill valve inlet port is compatible with~~ the first integrally molded portion of the bowl fill valve inserts into the bowl fill outlet port so that ~~and~~ the bowl fill valve inlet port is ~~being~~ coupled to the bowl fill outlet port ~~and establishing direct contact between the bowl fill outlet port and the bowl fill valve inlet port, wherein the bowl fill valve inlet port and the bowl fill valve outlet port each comprise an integrally molded portion of the bowl fill valve~~;

the bowl fill valve being configured to supply an adjustable flow of water out the bowl fill valve outlet port for filling a toilet bowl during a flush cycle of a toilet; and

the bowl fill valve being affixed to the bowl fill outlet port by an annular protrusion being snap-fit into an annular groove.

2. (Original) The toilet fill valve of claim 1, wherein:

the annular protrusion extends from a first side wall of the bowl fill valve inlet port; and

the annular groove is in a second side wall of the bowl fill outlet port.

3. (Original) The toilet fill valve of claim 1, wherein:

the annular groove is in a first side wall of the bowl fill valve inlet port; and

the annular protrusion extends from a second side wall of the bowl fill outlet port.

4. (Original) The toilet fill valve of claim 1, wherein bowl fill valve extends beyond the bowl fill outlet port in a radial direction with respect to a portion of the body of the toilet fill valve.

5. (Original) The toilet fill valve of claim 1, further comprising:

a float;

an actuating arm coupled to the float, the actuating arm radially extending in an orthogonal direction relative to a longitudinal axis of the toilet fill valve; and

the bowl fill valve extending in an orthogonal direction relative to the longitudinal axis of the toilet fill valve, wherein the actuating arm is angularly offset relative to the bowl fill valve, thereby preventing an interference with the bowl fill valve and a translational stem extending from the float to a free end of the actuating arm.

6. (Original) The toilet fill valve of claim 1, wherein the bowl fill valve outlet port further comprises a nipple adapted to mate with an end of a tube.

7. (Currently Amended) The toilet fill valve of claim 1, wherein the bowl fill valve further comprises a ~~number~~ plurality of biased positions.

8. (Currently Amended) The toilet fill valve of claim 1, further comprising:

a rib extending from a ~~side wall of the~~ bowl fill outlet port side wall; and

a slot in a ~~side wall of the~~ bowl fill valve inlet port side wall, the rib being inserted into the slot, thereby preventing rotation of the bowl fill valve with respect to the bowl fill outlet port.

9. (Currently Amended) The toilet fill valve of claim 1, further comprising:

a rib extending from a ~~side wall of the~~ bowl fill valve inlet port side wall; and

a slot in a ~~side wall of the~~ bowl fill outlet port side wall, the rib being inserted into the slot, thereby preventing rotation of the bowl fill valve with respect to the bowl fill outlet port.

10. (Currently Amended) A method for providing an adjustable bowl fill water flow from a toilet fill valve, comprising the steps of:

operatively coupling a bowl fill outlet port that radially extends from a portion of a body of the toilet fill valve to a water inlet of the toilet fill valve, the bowl fill outlet port ~~comprising~~ being an integrally molded portion of the body of the toilet fill valve; and

~~coupling~~ inserting a first integrally molded portion of a bowl fill valve that forms a bowl fill valve inlet port ~~of a bowl fill valve directly to~~ into the bowl fill outlet port ~~by~~ and engaging an annular groove with an annular protrusion, wherein the bowl fill valve inlet port is affixed to the bowl fill outlet port via the annular groove and the annular protrusion, ~~the bowl fill valve inlet port being~~

~~compatible with the bowl fill outlet port,~~ and the bowl fill valve being configured to provide for the adjustable bowl fill water flow out a second integrally molded portion of the bowl fill valve that forms a bowl fill valve outlet port ~~of the bowl fill valve~~ for filling a toilet bowl during a flush cycle of a toilet.

11. (Original) The method of claim 10, wherein:

the annular groove is associated with the bowl fill outlet port; and

the annular protrusion is associated with the bowl fill valve inlet port.

12. (Original) The method of claim 10, wherein:

the annular protrusion is associated with the bowl fill outlet port; and

the annular groove is associated with the bowl fill valve inlet port.

13. (Currently Amended) The method of claim 10, wherein the step of ~~coupling of the bowl fill valve inlet port of the bowl fill valve directly to the bowl fill outlet port~~ inserting the first integrally molded portion of the bowl fill valve into the bowl fill outlet port further comprises the step of mating a rib with a groove, thereby preventing rotation of the bowl fill valve with respect to the bowl fill outlet port.

14. (Original) The method of claim 13, wherein:

the rib is associated with the bowl fill outlet port; and

the groove is associated with the bowl fill valve inlet port.

15. (Original) The method of claim 13, wherein:

the groove is associated with the bowl fill outlet port; and

the rib is associated with the bowl fill valve inlet port.

16. (New) A system, comprising:

a toilet fill valve that comprises:

a water inlet;

a water outlet configured to provide water to a toilet tank; and

a body comprising an integrally molded portion that forms a bowl fill outlet port, the bowl fill outlet port being operatively coupled to the water inlet; and

a bowl fill valve comprising a first integrally molded portion and a second integrally molded portion, the first integrally molded portion forming a bowl fill valve inlet port, the second integrally molded portion forming a bowl fill valve outlet port, wherein the first integrally portion of the bowl fill valve is configured to make direct contact with the integrally molded portion of the body that forms the bowl fill outlet port by being affixed using an annular protrusion being snap-fit into an annular groove, wherein the bowl fill valve is configured to

provide an adjustable flow of water out the bowl fill valve outlet port to fill a toilet bowl during a flush cycle of a toilet.

17. (New) The system of claim 16, wherein:

the annular protrusion extends from a bowl fill valve inlet port side wall; and

the annular groove is in a bowl fill outlet port side wall.

18. (New) The system of claim 16, wherein:

the annular groove is in a bowl fill valve inlet port side wall; and

the annular protrusion extends from a bowl fill outlet port side wall.

19. (New) The system of claim 16, wherein the bowl fill valve outlet port is attached to a nipple adapted to mate with an end of a tube.

20. (New) The system of claim 16, wherein the bowl fill valve outlet port is associated with a rib that is configured to insert into a slot to prevent rotation of the bowl fill valve with respect to the bowl fill outlet port.

REMARKS

As of entry of this Response, claims 1-20 are pending in the present application. Claims 1, 7-10, and 13 are currently amended, and claims 16-20 are new. Reconsideration and allowance of the pending application and claims are respectfully requested.

I. Summary of Telephonic Interviews

On July 23, 2013 and July 24, 2013, Examiner Nguyen and Applicants' representative, Robert Gravois, conducted telephonic interviews. During the interviews, currently amended claim 1 was discussed. Examiner Nguyen indicated that he agreed that currently amended claim 1 was not disclosed or rendered obvious by the references cited in the Office Action. Applicants thank Examiner Nguyen for his time and consideration.

II. Rejections of Claims 10-12 under 35 U.S.C. § 102

Page 2 of the Office Action indicates that claims 10-12 are rejected under 35 U.S.C. § 102(b) as allegedly being anticipated by U.S. Patent 5,708,991 ("*DeMarco*") as evidenced by U.S. Patent 6,047,725 ("*Gish*"). A claim is anticipated only if each and every element as set forth in the claim is found, either expressly or inherently described, in a single prior art reference. *Verdegaal Bros. v. Union Oil Co. of California*, 814 F.2d 628, 631 (Fed. Cir. 1987). Stated differently, to anticipate a claim, it is required "that the four corners of a single, prior art document describe every element of the claimed invention."

Xerox Corp. v. 3Com Corp., 458 F.3d 1310, 1322 (Fed. Cir. 2006). Further, "unless a reference discloses within the four corners of the document not only all of the limitations claimed but also all of the limitations arranged or combined in the same way as recited in the claim, it cannot be said to prove prior invention of the thing claimed and, thus, cannot anticipate under 35 U.S.C. § 102." *Net MoneyIN, Inc. v. VeriSign, Inc.*, 545 F.3d 1359, 1371 (Fed. Cir. 2008). *See also* MPEP § 2131. Applicants respectfully request that the rejections of claims 10-12 be withdrawn for at least the following reasons.

Claim 10, as amended, recites in part:

> 10. A method for providing an adjustable bowl fill water flow from a toilet fill valve, comprising the steps of:
>
> …
>
> inserting a first integrally molded portion of a bowl fill valve that forms a bowl fill valve inlet port into the bowl fill outlet port and engaging an annular groove with an annular protrusion, wherein the bowl fill valve inlet port is affixed to the bowl fill outlet port via the annular groove and the annular protrusion, and the bowl fill valve being configured to provide for the adjustable bowl fill water flow out a second integrally molded portion of the bowl fill valve that forms a bowl fill valve outlet port for filling a toilet bowl during a flush cycle of a toilet.

During the examiner interviews dated July 23, 2013 and July 24, 2013, Examiner Nguyen agreed that claim elements similar to those recited above were not disclosed or rendered obvious by the references cited in the Office Action. Thus, Applicants respectfully submit that the combination of the cited references fails to disclose or render obvious all of the elements of claim 10.

Therefore, Applicants respectfully request that the rejection of claim 10 be withdrawn. In addition, Applicants respectfully request that the rejections of claims 11-12 be withdrawn as depending from claim 10.

III. Rejections of Claims 1-9 and 13-15 under 35 U.S.C. § 103

Page 3 of the Office Action indicates that claims 1-9 and 13-15 are rejected under 35 U.S.C. § 103(a) as allegedly being unpatentable over *DeMarco*, as evidenced by *Gish*, in view of U.S. Patent 5,624,073 ("*Mueller*"). In order to establish a *prima facie* case of obviousness under 35 U.S.C. § 103, the Examiner must show that each and every element of the claim is described or suggested by the prior art or would have been obvious in view of the prior art. *See In re Fine*, 837 F.2d 1071, 1073-1074 (Fed. Cir. 1988); *Ex Parte Wada and Murphy*, Appeal 2007-3733 (BPAI 2008); *See also, KSR Int'l v. Teleflex, Inc.*, 550 U.S. 398, 411 (2007) (claim deemed obvious to one of ordinary skill where all claim elements were disclosed in the cited prior art references). In addition, "[r]ejections on obviousness grounds cannot be sustained by mere conclusory statements; instead, there must be some articulated reasoning with some rational underpinning to support the legal conclusion of obviousness." *KSR Int'l*, 550 U.S. at 418 (quoting *In re Kahn*, 441 F.3d 977, 988 (Fed. Cir. 2006)). Applicants respectfully request that the rejections of claims 1-9 and 13-15 be withdrawn for at least the following reasons.

A. Claims 1-9

Claim 1, as amended, recites in part:

> 1. A toilet fill valve, comprising:
>
> …
>
> a bowl fill valve having a first integrally molded portion that forms a bowl fill valve inlet port, the bowl fill valve having a second integrally molded portion that forms a bowl fill valve outlet port, wherein the first integrally molded portion of the bowl fill valve

> inserts into the bowl fill outlet port so that the bowl fill valve inlet port is coupled to the bowl fill outlet port;
>
> … .

During the examiner interviews dated July 23, 2013 and July 24, 2013, Examiner Nguyen agreed that the claim elements that are recited above were not disclosed or rendered obvious by the references cited in the Office Action. Thus, Applicants respectfully submit that the combination of the cited references fails to disclose or render obvious all of the elements of claim 1.

Therefore, Applicants respectfully request that the rejection of claim 1 be withdrawn. In addition, Applicants respectfully request that the rejections of claims 2-9 be withdrawn as depending from claim 1.

B. Claims 13-15

Applicants respectfully request that the rejections of claims 13-15 be withdrawn as depending from claim 10 for the reasons set forth above. As discussed above, Examiner Nguyen indicated that he agreed that the combination of the cited references failed to disclose or render all of the elements of claim 10.

Therefore, the combination of the cited references fails to disclose or render obvious all of the elements of claim 10, from which claims 13-15 depend. For at least this reason, Applicants respectfully request that the rejections of claims 13-15 be withdrawn.

IV. Claims 16-20

New claims 16-20 have been added to claim further embodiments. Applicants respectfully request favorable consideration of claims 16-20.

CONCLUSION

It is requested that all outstanding objections and rejections be withdrawn and that this application and all presently pending claims be allowed to issue. If the Examiner has any questions or comments regarding this Response, the Examiner is encouraged to telephone the undersigned counsel of Applicants.

Respectfully submitted,

/RDG/

_____

Robert D. Gravois
Registration Number: 67,224

THOMAS|HORSTEMEYER, LLP
Customer Number 24504
(770) 933-9500

PTO/AIA/22 (03-13)
Approved for use through 3/31/2013. OMB 0651-0031
U.S. Patent and Trademark Office; U.S. DEPARTMENT OF COMMERCE
Under the Paperwork Reduction Act of 1995, no persons are required to respond to a collection of information unless it displays a valid OMB control number.

PETITION FOR EXTENSION OF TIME UNDER 37 CFR 1.136(a)	Docket Number (Optional) 171401-1033
Application Number 13/346,355	Filed January 09, 2012
For TOILET FILL VALVE WITH ADJUSTABLE BOWL FILL FLOW	
Art Unit 3751	Examiner Nguyen, Tuan N.

This is a request under the provisions of 37 CFR 1.136(a) to extend the period for filing a reply in the above-identified application.

The requested extension and fee are as follows (check time period desired and enter the appropriate fee below):

		Fee	Small Entity Fee	Micro Entity Fee	
☐	One month (37 CFR 1.17(a)(1))	$200	$100	$50	$
☐	Two months (37 CFR 1.17(a)(2))	$600	$300	$150	$
☑	Three months (37 CFR 1.17(a)(3))	$1,400	$700	$350	$ 1,400.00
☐	Four months (37 CFR 1.17(a)(4))	$2,200	$1,100	$550	$
☐	Five months (37 CFR 1.17(a)(5))	$3,000	$1,500	$750	$

☐ Applicant asserts small entity status. See 37 CFR 1.27.

☐ Applicant certifies micro entity status. See 37 CFR 1.29.
Form PTO/SB/15A or B or equivalent must either be enclosed or have been submitted previously.

☐ A check in the amount of the fee is enclosed.

☐ Payment by credit card. Form PTO-2038 is attached.

☐ The Director has already been authorized to charge fees in this application to a Deposit Account.

☑ The Director is hereby authorized to charge any fees which may be required, or credit any overpayment, to Deposit Account Number 20-0778.

☑ Payment made via EFS-Web.

WARNING: Information on this form may become public. Credit card information should not be included on this form. Provide credit card information and authorization on PTO-2038.

I am the

☐ applicant.

☑ attorney or agent of record. Registration number 67,224.

☐ attorney or agent acting under 37 CFR 1.34. Registration number _____.

/RDG/	2013-08-02
Signature	Date
Robert D. Gravois	770-933-9500
Typed or printed name	Telephone Number

NOTE: This form must be signed in accordance with 37 CFR 1.33. See 37 CFR 1.4 for signature requirements and certifications. Submit multiple forms if more than one signature is required, see below*.

☐ * Total of _____ forms are submitted.

This collection of information is required by 37 CFR 1.136(a). The information is required to obtain or retain a benefit by the public, which is to file (and by the USPTO to process) an application. Confidentiality is governed by 35 U.S.C. 122 and 37 CFR 1.11 and 1.14. This collection is estimated to take 6 minutes to complete, including gathering, preparing, and submitting the completed application form to the USPTO. Time will vary depending upon the individual case. Any comments on the amount of time you require to complete this form and/or suggestions for reducing this burden should be sent to the Chief Information Officer, U.S. Patent and Trademark Office, U.S. Department of Commerce, P.O. Box 1450, Alexandria, VA 22313-1450. DO NOT SEND FEES OR COMPLETED FORMS TO THIS ADDRESS. SEND TO: Mail Stop PCT, Commissioner for Patents, P.O. Box 1450, Alexandria, VA 22313-1450.

Privacy Act Statement

The **Privacy Act of 1974 (P.L. 93-579)** requires that you be given certain information in connection with your submission of the attached form related to a patent application or patent. Accordingly, pursuant to the requirements of the Act, please be advised that: (1) the general authority for the collection of this information is 35 U.S.C. 2(b)(2); (2) furnishing of the information solicited is voluntary; and (3) the principal purpose for which the information is used by the U.S. Patent and Trademark Office is to process and/or examine your submission related to a patent application or patent. If you do not furnish the requested information, the U.S. Patent and Trademark Office may not be able to process and/or examine your submission, which may result in termination of proceedings or abandonment of the application or expiration of the patent.

The information provided by you in this form will be subject to the following routine uses:

1. The information on this form will be treated confidentially to the extent allowed under the Freedom of Information Act (5 U.S.C. 552) and the Privacy Act (5 U.S.C 552a). Records from this system of records may be disclosed to the Department of Justice to determine whether disclosure of these records is required by the Freedom of Information Act.
2. A record from this system of records may be disclosed, as a routine use, in the course of presenting evidence to a court, magistrate, or administrative tribunal, including disclosures to opposing counsel in the course of settlement negotiations.
3. A record in this system of records may be disclosed, as a routine use, to a Member of Congress submitting a request involving an individual, to whom the record pertains, when the individual has requested assistance from the Member with respect to the subject matter of the record.
4. A record in this system of records may be disclosed, as a routine use, to a contractor of the Agency having need for the information in order to perform a contract. Recipients of information shall be required to comply with the requirements of the Privacy Act of 1974, as amended, pursuant to 5 U.S.C. 552a(m).
5. A record related to an International Application filed under the Patent Cooperation Treaty in this system of records may be disclosed, as a routine use, to the International Bureau of the World Intellectual Property Organization, pursuant to the Patent Cooperation Treaty.
6. A record in this system of records may be disclosed, as a routine use, to another federal agency for purposes of National Security review (35 U.S.C. 181) and for review pursuant to the Atomic Energy Act (42 U.S.C. 218(c)).
7. A record from this system of records may be disclosed, as a routine use, to the Administrator, General Services, or his/her designee, during an inspection of records conducted by GSA as part of that agency's responsibility to recommend improvements in records management practices and programs, under authority of 44 U.S.C. 2904 and 2906. Such disclosure shall be made in accordance with the GSA regulations governing inspection of records for this purpose, and any other relevant (*i.e.*, GSA or Commerce) directive. Such disclosure shall not be used to make determinations about individuals.
8. A record from this system of records may be disclosed, as a routine use, to the public after either publication of the application pursuant to 35 U.S.C. 122(b) or issuance of a patent pursuant to 35 U.S.C. 151. Further, a record may be disclosed, subject to the limitations of 37 CFR 1.14, as a routine use, to the public if the record was filed in an application which became abandoned or in which the proceedings were terminated and which application is referenced by either a published application, an application open to public inspection or an issued patent.
9. A record from this system of records may be disclosed, as a routine use, to a Federal, State, or local law enforcement agency, if the USPTO becomes aware of a violation or potential violation of law or regulation.

PTO/SB/06 (09-11)
Approved for use through 1/31/2014. OMB 0651-0032
U.S. Patent and Trademark Office; U.S. DEPARTMENT OF COMMERCE
Under the Paperwork Reduction Act of 1995, no persons are required to respond to a collection of information unless it displays a valid OMB control number.

PATENT APPLICATION FEE DETERMINATION RECORD Substitute for Form PTO-875	Application or Docket Number 13/346,355	Filing Date 01/09/2012	☐ To be Mailed

ENTITY: ☐ LARGE ☒ SMALL ☐ MICRO

APPLICATION AS FILED – PART I

FOR	(Column 1) NUMBER FILED	(Column 2) NUMBER EXTRA	RATE ($)	FEE ($)
☐ BASIC FEE (37 CFR 1.16(a), (b), or (c))	N/A	N/A	N/A	
☐ SEARCH FEE (37 CFR 1.16(k), (i), or (m))	N/A	N/A	N/A	
☐ EXAMINATION FEE (37 CFR 1.16(o), (p), or (q))	N/A	N/A	N/A	
TOTAL CLAIMS (37 CFR 1.16(i))	minus 20 =	*	X $ =	
INDEPENDENT CLAIMS (37 CFR 1.16(h))	minus 3 =	*	X $ =	
☐ APPLICATION SIZE FEE (37 CFR 1.16(s))	If the specification and drawings exceed 100 sheets of paper, the application size fee due is $310 ($155 for small entity) for each additional 50 sheets or fraction thereof. See 35 U.S.C. 41(a)(1)(G) and 37 CFR 1.16(s).			
☐ MULTIPLE DEPENDENT CLAIM PRESENT (37 CFR 1.16(j))				
* If the difference in column 1 is less than zero, enter "0" in column 2.			TOTAL	

APPLICATION AS AMENDED – PART II

AMENDMENT	08/02/2013	(Column 1) CLAIMS REMAINING AFTER AMENDMENT		(Column 2) HIGHEST NUMBER PREVIOUSLY PAID FOR	(Column 3) PRESENT EXTRA	RATE ($)	ADDITIONAL FEE ($)
	Total (37 CFR 1.16(i))	* 20	Minus	** 20	= 0	X $40 =	0
	Independent (37 CFR 1.16(h))	* 2	Minus	***3	= 0	X $210 =	0
	☐ Application Size Fee (37 CFR 1.16(s))						
	☐ FIRST PRESENTATION OF MULTIPLE DEPENDENT CLAIM (37 CFR 1.16(j))						
						TOTAL ADD'L FEE	**0**

AMENDMENT		(Column 1) CLAIMS REMAINING AFTER AMENDMENT		(Column 2) HIGHEST NUMBER PREVIOUSLY PAID FOR	(Column 3) PRESENT EXTRA	RATE ($)	ADDITIONAL FEE ($)
	Total (37 CFR 1.16(i))	*	Minus	**	=	X $ =	
	Independent (37 CFR 1.16(h))	*	Minus	***	=	X $ =	
	☐ Application Size Fee (37 CFR 1.16(s))						
	☐ FIRST PRESENTATION OF MULTIPLE DEPENDENT CLAIM (37 CFR 1.16(j))						
						TOTAL ADD'L FEE	

* If the entry in column 1 is less than the entry in column 2, write "0" in column 3.
** If the "Highest Number Previously Paid For" IN THIS SPACE is less than 20, enter "20".
*** If the "Highest Number Previously Paid For" IN THIS SPACE is less than 3, enter "3".
The "Highest Number Previously Paid For" (Total or Independent) is the highest number found in the appropriate box in column 1.

LIE
/DEANNA RORIE/

This collection of information is required by 37 CFR 1.16. The information is required to obtain or retain a benefit by the public which is to file (and by the USPTO to process) an application. Confidentiality is governed by 35 U.S.C. 122 and 37 CFR 1.14. This collection is estimated to take 12 minutes to complete, including gathering, preparing, and submitting the completed application form to the USPTO. Time will vary depending upon the individual case. Any comments on the amount of time you require to complete this form and/or suggestions for reducing this burden, should be sent to the Chief Information Officer, U.S. Patent and Trademark Office, U.S. Department of Commerce, P.O. Box 1450, Alexandria, VA 22313-1450. DO NOT SEND FEES OR COMPLETED FORMS TO THIS ADDRESS. **SEND TO: Commissioner for Patents, P.O. Box 1450, Alexandria, VA 22313-1450.**
If you need assistance in completing the form, call 1-800-PTO-9199 and select option 2.

UNITED STATES PATENT AND TRADEMARK OFFICE

UNITED STATES DEPARTMENT OF COMMERCE
United States Patent and Trademark Office
Address: COMMISSIONER FOR PATENTS
P.O. Box 1450
Alexandria, Virginia 22313-1450
www.uspto.gov

APPLICATION NO.	FILING DATE	FIRST NAMED INVENTOR	ATTORNEY DOCKET NO.	CONFIRMATION NO.
13/346,355	01/09/2012	Michael J. Schuster	171901-1033	7392

24504 7590 07/30/2013
THOMAS | HORSTEMEYER, LLP
400 INTERSTATE NORTH PARKWAY SE
SUITE 1500
ATLANTA, GA 30339

EXAMINER
NGUYEN, TUAN N

ART UNIT	PAPER NUMBER
3751	

NOTIFICATION DATE	DELIVERY MODE
07/30/2013	ELECTRONIC

Please find below and/or attached an Office communication concerning this application or proceeding.

The time period for reply, if any, is set in the attached communication.

Notice of the Office communication was sent electronically on above-indicated "Notification Date" to the following e-mail address(es):

uspatents@tkhr.com
kristen.layton@tkhr.com
ozzie.liggins@tkhr.com

PTOL-90A (Rev. 04/07)

Applicant-Initiated Interview Summary	Application No.	Applicant(s)	
	13/346,355	SCHUSTER ET AL.	
	Examiner	Art Unit	
	TUAN N. NGUYEN	3751	

All participants (applicant, applicant's representative, PTO personnel):

(1) *TUAN N. NGUYEN*. (3)_____.

(2) *ROBERT GRAVOIS*. (4)_____.

Date of Interview: *24 July 2013*.

Type: ☒ Telephonic ☐ Video Conference
☐ Personal [copy given to: ☐ applicant ☐ applicant's representative]

Exhibit shown or demonstration conducted: ☐ Yes ☐ No.
If Yes, brief description: _____.

Issues Discussed ☐101 ☐112 ☒102 ☒103 ☐Others
(For each of the checked box(es) above, please describe below the issue and detailed description of the discussion)

Claim(s) discussed: *1*.

Identification of prior art discussed: *DeMarco*.

Substance of Interview
(For each issue discussed, provide a detailed description and indicate if agreement was reached. Some topics may include: identification or clarification of a reference or a portion thereof, claim interpretation, proposed amendments, arguments of any applied references etc...)

See Continuation Sheet.

Applicant recordation instructions: The formal written reply to the last Office action must include the substance of the interview. (See MPEP section 713.04). If a reply to the last Office action has already been filed, applicant is given a non-extendable period of the longer of one month or thirty days from this interview date, or the mailing date of this interview summary form, whichever is later, to file a statement of the substance of the interview

Examiner recordation instructions: Examiners must summarize the substance of any interview of record. A complete and proper recordation of the substance of an interview should include the items listed in MPEP 713.04 for complete and proper recordation including the identification of the general thrust of each argument or issue discussed, a general indication of any other pertinent matters discussed regarding patentability and the general results or outcome of the interview, to include an indication as to whether or not agreement was reached on the issues raised.

☐ Attachment

/TUAN N NGUYEN/ Primary Examiner, Art Unit 3751	

Fluidmaster, Inc. - EX1009, Page 058
IPR2024-00633 (Fluidmaster Inc v. Danco Inc)

Summary of Record of Interview Requirements

Manual of Patent Examining Procedure (MPEP), Section 713.04, Substance of Interview Must be Made of Record
A complete written statement as to the substance of any face-to-face, video conference, or telephone interview with regard to an application must be made of record in the application whether or not an agreement with the examiner was reached at the interview.

Title 37 Code of Federal Regulations (CFR) § 1.133 Interviews
Paragraph (b)

In every instance where reconsideration is requested in view of an interview with an examiner, a complete written statement of the reasons presented at the interview as warranting favorable action must be filed by the applicant. An interview does not remove the necessity for reply to Office action as specified in §§ 1.111, 1.135. (35 U.S.C. 132)

37 CFR §1.2 Business to be transacted in writing.
All business with the Patent or Trademark Office should be transacted in writing. The personal attendance of applicants or their attorneys or agents at the Patent and Trademark Office is unnecessary. The action of the Patent and Trademark Office will be based exclusively on the written record in the Office. No attention will be paid to any alleged oral promise, stipulation, or understanding in relation to which there is disagreement or doubt.

The action of the Patent and Trademark Office cannot be based exclusively on the written record in the Office if that record is itself incomplete through the failure to record the substance of interviews.

It is the responsibility of the applicant or the attorney or agent to make the substance of an interview of record in the application file, unless the examiner indicates he or she will do so. It is the examiner's responsibility to see that such a record is made and to correct material inaccuracies which bear directly on the question of patentability.

Examiners must complete an Interview Summary Form for each interview held where a matter of substance has been discussed during the interview by checking the appropriate boxes and filling in the blanks. Discussions regarding only procedural matters, directed solely to restriction requirements for which interview recordation is otherwise provided for in Section 812.01 of the Manual of Patent Examining Procedure, or pointing out typographical errors or unreadable script in Office actions or the like, are excluded from the interview recordation procedures below. Where the substance of an interview is completely recorded in an Examiners Amendment, no separate Interview Summary Record is required.

The Interview Summary Form shall be given an appropriate Paper No., placed in the right hand portion of the file, and listed on the "Contents" section of the file wrapper. In a personal interview, a duplicate of the Form is given to the applicant (or attorney or agent) at the conclusion of the interview. In the case of a telephone or video-conference interview, the copy is mailed to the applicant's correspondence address either with or prior to the next official communication. If additional correspondence from the examiner is not likely before an allowance or if other circumstances dictate, the Form should be mailed promptly after the interview rather than with the next official communication.

The Form provides for recordation of the following information:
- Application Number (Series Code and Serial Number)
- Name of applicant
- Name of examiner
- Date of interview
- Type of interview (telephonic, video-conference, or personal)
- Name of participant(s) (applicant, attorney or agent, examiner, other PTO personnel, etc.)
- An indication whether or not an exhibit was shown or a demonstration conducted
- An identification of the specific prior art discussed
- An indication whether an agreement was reached and if so, a description of the general nature of the agreement (may be by attachment of a copy of amendments or claims agreed as being allowable). Note: Agreement as to allowability is tentative and does not restrict further action by the examiner to the contrary.
- The signature of the examiner who conducted the interview (if Form is not an attachment to a signed Office action)

It is desirable that the examiner orally remind the applicant of his or her obligation to record the substance of the interview of each case. It should be noted, however, that the Interview Summary Form will not normally be considered a complete and proper recordation of the interview unless it includes, or is supplemented by the applicant or the examiner to include, all of the applicable items required below concerning the substance of the interview.

A complete and proper recordation of the substance of any interview should include at least the following applicable items:
1) A brief description of the nature of any exhibit shown or any demonstration conducted,
2) an identification of the claims discussed,
3) an identification of the specific prior art discussed,
4) an identification of the principal proposed amendments of a substantive nature discussed, unless these are already described on the Interview Summary Form completed by the Examiner,
5) a brief identification of the general thrust of the principal arguments presented to the examiner,
   (The identification of arguments need not be lengthy or elaborate. A verbatim or highly detailed description of the arguments is not required. The identification of the arguments is sufficient if the general nature or thrust of the principal arguments made to the examiner can be understood in the context of the application file. Of course, the applicant may desire to emphasize and fully describe those arguments which he or she feels were or might be persuasive to the examiner.)
6) a general indication of any other pertinent matters discussed, and
7) if appropriate, the general results or outcome of the interview unless already described in the Interview Summary Form completed by the examiner.

Examiners are expected to carefully review the applicant's record of the substance of an interview. If the record is not complete and accurate, the examiner will give the applicant an extendable one month time period to correct the record.

Examiner to Check for Accuracy

If the claims are allowable for other reasons of record, the examiner should send a letter setting forth the examiner's version of the statement attributed to him or her. If the record is complete and accurate, the examiner should place the indication, "Interview Record OK" on the paper recording the substance of the interview along with the date and the examiner's initials.

Continuation of Substance of Interview including description of the general nature of what was agreed to if an agreement was reached, or any other comments: It was agreed that the proposed amendment to claim as inidicated below would overcome the previously prior art rejection. However, further search and consideration are needed.

1. (Proposed) A toilet fill valve, comprising:
a water inlet
a water outlet configured to supply water to a toilet tanki
a bowl fill outlet port radially extending from a portion of a body of the toilet
fill valve, the bowl fill outlet port being operatively coupled to the water inlet, and the
bowl fill outlet port being an integrally molded portion of the body of the toilet
fill valve;
a bowl fill valve having a first integrally molded portion that forms a bowl fill
valve inlet port, the bowl fill valve havinq a second inteqrallv molded portion that
forms a bowl fill valve outlet port, wherein the first integrally molded portion of the bowl fill valve inserts into the bowl fill outlet port so that the bowl fill valve inlet port is coupled to the bowl fill outlet port;
the bowl fill valve being configured to supply an adjustable flow of water
out the bowl fill valve outlet port for filling a toilet bowl during a flush cycle of a toilet; and
the bowl fill valve being affixed to the bowl fill outlet port by an annular
protrusion being snap-fit into an annular groove.

UNITED STATES PATENT AND TRADEMARK OFFICE

UNITED STATES DEPARTMENT OF COMMERCE
United States Patent and Trademark Office
Address: COMMISSIONER FOR PATENTS
P.O. Box 1450
Alexandria, Virginia 22313-1450
www.uspto.gov

APPLICATION NO.	FILING DATE	FIRST NAMED INVENTOR	ATTORNEY DOCKET NO.	CONFIRMATION NO.
13/346,355	01/09/2012	Michael J. Schuster	171901-1033	7392

24504 7590 05/31/2013
THOMAS | HORSTEMEYER, LLP
400 INTERSTATE NORTH PARKWAY SE
SUITE 1500
ATLANTA, GA 30339

EXAMINER
NGUYEN, TUAN N

ART UNIT	PAPER NUMBER
3751	

NOTIFICATION DATE	DELIVERY MODE
05/31/2013	ELECTRONIC

Please find below and/or attached an Office communication concerning this application or proceeding.

The time period for reply, if any, is set in the attached communication.

Notice of the Office communication was sent electronically on above-indicated "Notification Date" to the following e-mail address(es):

uspatents@tkhr.com
kristen.layton@tkhr.com
ozzie.liggins@tkhr.com

PTOL-90A (Rev. 04/07)

Advisory Action Before the Filing of an Appeal Brief	**Application No.** *13/346,355*	**Applicant(s)** SCHUSTER ET AL.
	Examiner TUAN N. NGUYEN	**Art Unit** 3751

--The MAILING DATE of this communication appears on the cover sheet with the correspondence address --

THE REPLY FILED 5/23/13 FAILS TO PLACE THIS APPLICATION IN CONDITION FOR ALLOWANCE.

NO NOTICE OF APPEAL FILED

1. ☒ The reply was filed after a final rejection. No Notice of Appeal has been filed. To avoid abandonment of this application, applicant must timely file one of the following replies: (1) an amendment, affidavit, or other evidence, which places the application in condition for allowance;

(2) a Notice of Appeal (with appeal fee) in compliance with 37 CFR 41.31; or (3) a Request for Continued Examination (RCE) in compliance with 37 CFR 1.114 if this is a utility or plant application. Note that RCEs are not permitted in design applications. The reply must be filed within one of the following time periods:

a) ☒ The period for reply expires 3 months from the mailing date of the final rejection.

b) ☐ The period for reply expires on: (1) the mailing date of this Advisory Action; or (2) the date set forth in the final rejection, whichever is later. In no event, however, will the statutory period for reply expire later than SIX MONTHS from the mailing date of the final rejection.

c) ☐ A prior Advisory Action was mailed more than 3 months after the mailing date of the final rejection in response to a first after-final reply filed within 2 months of the mailing date of the final rejection. The current period for reply expires months from the mailing date of *the prior Advisory Action* or SIX MONTHS from the mailing date of the final rejection, whichever is earlier.

Examiner Note: If box 1 is checked, check either box (a), (b) or (c). ONLY CHECK BOX (b) WHEN THIS ADVISORY ACTION IS THE FIRST RESPONSE TO APPLICANT'S FIRST AFTER-FINAL REPLY WHICH WAS FILED WITHIN TWO MONTHS OF THE FINAL REJECTION. ONLY CHECK BOX (c) IN THE LIMITED SITUATION SET FORTH UNDER BOX (c). See MPEP 706.07(f).

Extensions of time may be obtained under 37 CFR 1.136(a). The date on which the petition under 37 CFR 1.136(a) and the appropriate extension fee have been filed is the date for purposes of determining the period of extension and the corresponding amount of the fee. The appropriate extension fee under 37 CFR 1.17(a) is calculated from: (1) the expiration date of the shortened statutory period for reply originally set in the final Office action; or (2) as set forth in (b) or (c) above, if checked. Any reply received by the Office later than three months after the mailing date of the final rejection, even if timely filed, may reduce any earned patent term adjustment. See 37 CFR 1.704(b).

NOTICE OF APPEAL

2. ☐ The Notice of Appeal was filed on _____. A brief in compliance with 37 CFR 41.37 must be filed within two months of the date of filing the Notice of Appeal (37 CFR 41.37(a)), or any extension thereof (37 CFR 41.37(e)), to avoid dismissal of the appeal. Since a Notice of Appeal has been filed, any reply must be filed within the time period set forth in 37 CFR 41.37(a).

AMENDMENTS

3. ☒ The proposed amendments filed after a final rejection, but prior to the date of filing a brief, will not be entered because

a) ☐ They raise new issues that would require further consideration and/or search (see NOTE below);

b) ☐ They raise the issue of new matter (see NOTE below);

c) ☒ They are not deemed to place the application in better form for appeal by materially reducing or simplifying the issues for appeal; and/or

d) ☐ They present additional claims without canceling a corresponding number of finally rejected claims.

NOTE: _____. (See 37 CFR 1.116 and 41.33(a)).

4. ☐ The amendments are not in compliance with 37 CFR 1.121. See attached Notice of Non-Compliant Amendment (PTOL-324).

5. ☐ Applicant's reply has overcome the following rejection(s): _____.

6. ☐ Newly proposed or amended claim(s) _____ would be allowable if submitted in a separate, timely filed amendment canceling the non-allowable claim(s).

7. ☐ For purposes of appeal, the proposed amendment(s): (a) ☐ will not be entered, or (b) ☐ will be entered, and an explanation of how the new or amended claims would be rejected is provided below or appended.

AFFIDAVIT OR OTHER EVIDENCE

8. ☐ The affidavit or other evidence filed after final action, but before or on the date of filing a Notice of Appeal will not be entered because applicant failed to provide a showing of good and sufficient reasons why the affidavit or other evidence is necessary and was not earlier presented. See 37 CFR 1.116(e).

9. ☐ The affidavit or other evidence filed after the date of filing the Notice of Appeal, but prior to the date of filing a brief, will not be entered because the affidavit or other evidence failed to overcome all rejections under appeal and/or appellant fails to provide a showing of good and sufficient reasons why it is necessary and was not earlier presented. See 37 CFR 41.33(d)(1).

10. ☐ The affidavit or other evidence is entered. An explanation of the status of the claims after entry is below or attached.

REQUEST FOR RECONSIDERATION/OTHER

11. ☒ The request for reconsideration has been considered but does NOT place the application in condition for allowance because: See Continuation Sheet.

12. ☐ Note the attached Information *Disclosure Statement*(s). (PTO/SB/08) Paper No(s). _____

13. ☐ Other: _____.

STATUS OF CLAIMS

14. The status of the claim(s) is (or will be) as follows:

Claim(s) allowed: .

Claim(s) objected to: .

Claim(s) rejected: 1-15.

Claim(s) withdrawn from consideration: .

/TUAN N NGUYEN/
Primary Examiner
Art Unit: 3751

Fluidmaster, Inc. - EX1009, Page 062
IPR2024-00633 (Fluidmaster Inc v. Danco Inc)

Continuation of 11. does NOT place the application in condition for allowance because: Applicant's argument has been previously address. Furthermore, it appears Applicant want to see the protrusion port, where the member 22 to the left of valve 36, is connected to is the integral molded portion of the toilet fill valve.

Fluidmaster, Inc. - EX1009, Page 063
IPR2024-00633 (Fluidmaster Inc v. Danco Inc)

IN THE UNITED STATES PATENT AND TRADEMARK OFFICE

In re the application of:	Confirmation: 7392
Schuster *et al.*	Art Unit: 3751
Application Number: 13/346,355	Examiner: Nguyen, Tuan N
Filing Date: January 09, 2012	Docket No.: 171901-1033

Title: **TOILET FILL VALVE WITH ADJUSTABLE BOWL FILL FLOW**

RESPONSE TO FINAL OFFICE ACTION DATED FEBRUARY 04, 2013

Mail Stop: Amendment
Commissioner for Patents
P.O. Box 1450
Alexandria, VA 22313-1450

Sir:

With respect to the outstanding final Office Action dated February 4, 2013, the following Response is submitted.

It is believed that no extensions of time or fees for net addition of claims are required, beyond those that may otherwise be provided for in documents accompanying this paper. However, in the event that additional extensions of time are necessary to allow consideration of this paper, such extensions are hereby petitioned under 37 C.F.R. § 1.136(a), and any fees required therefor (including fees for net addition of claims) are hereby authorized to be charged to Deposit Account No. 20-0778.

IN THE CLAIMS:

Please amend the claims as indicated below. The language being added is underlined ("__"), and the language being deleted contains a double strikethrough ("=").

1. (Previously presented) A toilet fill valve, comprising:

a water inlet;

a first water outlet configured to supply water to a toilet tank;

a bowl fill outlet port radially extending from a portion of a body of the toilet fill valve, the bowl fill outlet port being operatively coupled to the water inlet, and the bowl fill outlet port comprising an integrally molded portion of the body of the toilet fill valve;

a bowl fill valve having a bowl fill valve inlet port and a bowl fill valve outlet port, wherein the bowl fill valve inlet port is compatible with the bowl fill outlet port and the bowl fill valve inlet port being coupled to the bowl fill outlet port and establishing direct contact between the bowl fill outlet port and the bowl fill valve inlet port, wherein the bowl fill valve inlet port and the bowl fill valve outlet port each comprise an integrally molded portion of the bowl fill valve;

the bowl fill valve being configured to supply an adjustable flow of water out the bowl fill valve outlet port for filling a toilet bowl during a flush cycle of a toilet; and

the bowl fill valve being affixed to the bowl fill outlet port by an annular protrusion being snap-fit into an annular groove.

2. (Original) The toilet fill valve of claim 1, wherein:

the annular protrusion extends from a first side wall of the bowl fill valve inlet port; and

the annular groove is in a second side wall of the bowl fill outlet port.

3. (Original) The toilet fill valve of claim 1, wherein:

the annular groove is in a first side wall of the bowl fill valve inlet port; and

the annular protrusion extends from a second side wall of the bowl fill outlet port.

4. (Original) The toilet fill valve of claim 1, wherein bowl fill valve extends beyond the bowl fill outlet port in a radial direction with respect to a portion of the body of the toilet fill valve.

5. (Original) The toilet fill valve of claim 1, further comprising:

a float;

an actuating arm coupled to the float, the actuating arm radially extending in an orthogonal direction relative to a longitudinal axis of the toilet fill valve; and

the bowl fill valve extending in an orthogonal direction relative to the longitudinal axis of the toilet fill valve, wherein the actuating arm is angularly offset relative to the bowl fill valve, thereby preventing an interference with the bowl fill valve and a translational stem extending from the float to a free end of the actuating arm.

6. (Original) The toilet fill valve of claim 1, wherein the bowl fill valve outlet port further comprises a nipple adapted to mate with an end of a tube.

7. (Original) The toilet fill valve of claim 1, wherein the bowl fill valve further comprises a number of biased positions.

8. (Original) The toilet fill valve of claim 1, further comprising:

a rib extending from a side wall of the bowl fill outlet port; and

a slot in a side wall of the bowl fill valve inlet port, the rib being inserted into the slot, thereby preventing rotation of the bowl fill valve with respect to the bowl fill outlet port.

9. (Original) The toilet fill valve of claim 1, further comprising:

a rib extending from a side wall of the bowl fill valve inlet port; and

a slot in a side wall of the bowl fill outlet port, the rib being inserted into the slot, thereby preventing rotation of the bowl fill valve with respect to the bowl fill outlet port.

10. (Previously presented) A method for providing an adjustable bowl fill water flow from a toilet fill valve, comprising the steps of:

operatively coupling a bowl fill outlet port that radially extends from a portion of a body of the toilet fill valve to a water inlet of the toilet fill valve, the bowl fill outlet port comprising an integrally molded portion of the body of the toilet fill valve; and

coupling a bowl fill valve inlet port of a bowl fill valve directly to the bowl fill outlet port by engaging an annular groove with an annular protrusion, wherein the bowl fill valve inlet port is affixed to the bowl fill outlet port via the annular groove and the annular protrusion, the bowl fill valve inlet port being compatible with the bowl fill outlet port, and the bowl fill valve being configured to provide for the adjustable bowl fill water flow out a bowl fill valve outlet port of the bowl fill valve for filling a toilet bowl during a flush cycle of a toilet.

11. (Original) The method of claim 10, wherein:

the annular groove is associated with the bowl fill outlet port; and

the annular protrusion is associated with the bowl fill valve inlet port.

12. (Original) The method of claim 10, wherein:

the annular protrusion is associated with the bowl fill outlet port; and

the annular groove is associated with the bowl fill valve inlet port.

13. (Original) The method of claim 10, wherein the step of coupling of the bowl fill valve inlet port of the bowl fill valve directly to the bowl fill outlet port further comprises the step of mating a rib with a groove, thereby preventing rotation of the bowl fill valve with respect to the bowl fill outlet port.

14. (Original) The method of claim 13, wherein:

the rib is associated with the bowl fill outlet port; and

the groove is associated with the bowl fill valve inlet port.

15. (Original) The method of claim 13, wherein:

the groove is associated with the bowl fill outlet port; and

the rib is associated with the bowl fill valve inlet port.

REMARKS

As of entry of this Response, claims 1-15 remain pending in the present application. Reconsideration and allowance of the pending application and claims are respectfully requested.

I. Rejections of Claims 10-12 under 35 U.S.C. § 102

Page 2 of the Office Action indicates that claims 10-12 are rejected under 35 U.S.C. § 102(b) as allegedly being anticipated by U.S. Patent 5,708,991 ("*DeMarco*") as evidenced by U.S. Patent 6,047,725 ("*Gish*"). A claim is anticipated only if each and every element as set forth in the claim is found, either expressly or inherently described, in a single prior art reference. *Verdegaal Bros. v. Union Oil Co. of California*, 814 F.2d 628, 631 (Fed. Cir. 1987). Stated differently, to anticipate a claim, it is required "that the four corners of a single, prior art document describe every element of the claimed invention." *Xerox Corp. v. 3Com Corp.*, 458 F.3d 1310, 1322 (Fed. Cir. 2006). Further, "unless a reference discloses within the four corners of the document not only all of the limitations claimed but also all of the limitations arranged or combined in the same way as recited in the claim, it cannot be said to prove prior invention of the thing claimed and, thus, cannot anticipate under 35 U.S.C. § 102." *Net MoneyIN, Inc. v. VeriSign, Inc.*, 545 F.3d 1359, 1371 (Fed. Cir. 2008). *See also* MPEP § 2131. Applicants respectfully request that the rejections of claims 10-12 be withdrawn for at least the following reasons.

Claim 10 recites as follows:

> 10. A method for providing an adjustable bowl fill water flow from a toilet fill valve, comprising the steps of:
>
> operatively coupling a bowl fill outlet port that radially extends from a portion of a body of the toilet fill valve to a water inlet of the toilet fill valve, the bowl fill outlet port comprising an integrally molded portion of the body of the toilet fill valve; and
>
> ***coupling a bowl fill valve inlet port of a bowl fill valve <u>directly</u> to the bowl fill outlet port <u>by engaging an annular groove</u> with an annular protrusion, wherein the bowl fill valve inlet port is affixed to the bowl fill outlet port via the annular groove and the annular protrusion***, the bowl fill valve inlet port being compatible with the bowl fill outlet port, and the bowl fill valve being configured to provide for the adjustable bowl fill water flow out a bowl fill valve outlet port of the bowl fill valve for filling a toilet bowl during a flush cycle of a toilet.

(*Emphasis added*). Applicants respectfully submit that the cited references fail to disclose or render obvious at least the elements of claim 10 that are emphasized above.

In rejecting claim 10, the Office Action appears to rely on the same rationale that was provided in the Non-Final Office Action dated July 12, 2012. With respect to the claim element "coupling a bowl fill valve inlet port of a bowl fill valve directly to the bowl fill outlet port," page 2 of the Non-Final Office Action alleged:

> DeMarco discloses an adjustable bowl fill water with a bowl fill outlet port (defined by 22) being coupling to a bowl fill valve (36) with a bowl fill valve inlet port (44) engaging the outlet port by annular groove (in hose 22 cause by 44) and annular protrusion (see Fig. 2 at 44).

FIG. 1 of *DeMarco* is provided below:

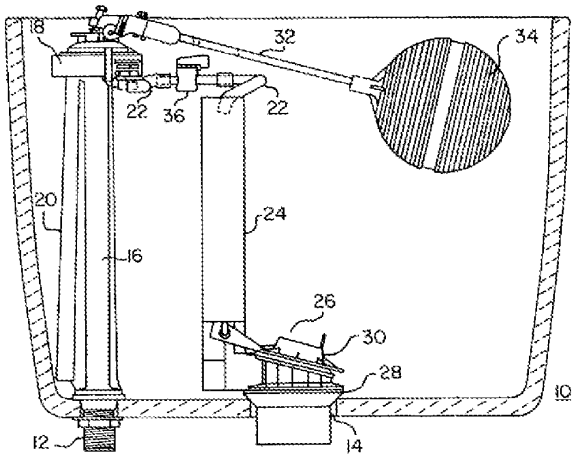

FIG. 1

Thus, it appears that the Office Action is alleging that the left hose 22 in *DeMarco* is "a bowl fill outlet port" and that the reseal valve 36 is "a bowl fill valve," as recited in claim 10. However, claim 10 specifically recites that "the bowl fill outlet port compris[es] ***an integrally molded portion*** of the body of the toilet fill valve" (*emphasis added*). By contrast, the left hose 22 in *DeMarco* appears to be a flexible tube that is a distinct component from the water control assembly 18. In other words, the left hose 22 does not comprise an integrally molded portion of the water control assembly 18. Thus, *DeMarco* does not disclose or render obvious "coupling a bowl fill valve inlet port of a bowl fill valve directly to the bowl fill outlet port," "the bowl fill outlet port comprising an integrally molded portion of the body of the toilet fill valve," as recited in claim 10.

The bowl fill outlet port comprising an integrally molded portion of the body of the toilet fill valve, as claimed, serves an important function for the toilet fill valve. For example, as explained in paragraph [0023] of Applicants' detailed description:

> Specifically, ***the fact that the bowl fill valve 109 is integral with the toilet fill valve 100 prevents the creation of a pressure head in the tube 146 as would be the case if the bowl fill valve 109 were included in the middle of the tube 146***. The fact that a pressure head is not created in any portion of the tube 146 prevents the tube 146 from working its way off of the bowl fill valve outlet 116 over time.

(*Emphasis added*). Thus, the bowl fill valve outlet port comprising an integrally molded portion of the body of the toilet fill valve may prevent a pressure head from developing in a tube. In other words, if the bowl fill valve were located between a tube, as appears to be the case in FIG. 1 of *DeMarco*, the tube may be forced off of the bowl fill valve over time. Therefore, Applicants respectfully submit that claim 10 solves a problem that can arise from the configuration shown in FIG. 1 of *DeMarco*.

In responding to Applicants' previous arguments, pages 2-3 of the Office Action allege:

> [H]ose 22 to the left of valve 36 [in *DeMarco*] serves as an inlet connection for valve 36; therefore, it is directly couple the bowl fill valve inlet port to the bowl fill outlet port. It is reminded that Applicant is using the term "comprising" an integrally molded portion of the body of the toilet valve. DeMarco is silenced as to the process of making the body of the toilet fill valve and outlet that radially extends from a portion of the body because such process is inherently well-known in the art given the particular shape and structure of the toilet fill valve and body (16 and 18) of DeMarco as shown. The Gish reference is provided herewith as evidence of such well-known process in that the body 204 and outlet 224 are integrally molded (see Gish col. 4, line 19+).

First, Applicants respectfully traverse any findings in the Office Action that coupling a bowl fill valve inlet port of a bowl fill valve directly to a bowl fill outlet port is well-known. As is readily apparent from FIG. 1 of *DeMarco*, the flexible tube 22 connects the reseal valve 36 to the water control assembly 18. The

flexible tube 22 is not an integrally molded portion of the water control assembly 18. Instead, the flexible tube 22 is a component that is distinct from the water control assembly 18. Thus, the reseal valve 36 is not directly coupled to the water control assembly 18.

FIG. 1 of *Gish* is produced below:

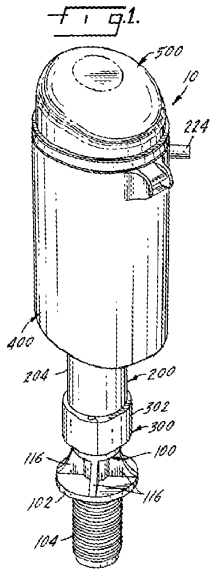

Col. 4, lines 33-37, of *Gish* states:

> Just below the platform 208 an outlet port 222 is cut through the wall of the sleeve 204. The port 222 communicates with a radially-extending conduit 224. ***The conduit connects to a fill tube*** (not shown) for refilling the toilet bowl in the conventional manner.

(*Emphasis added*). Thus, the conduit 224 in *Gish* connects to a fill tube, apparently the same type of flexible tube 22 shown in FIG. 1 of *DeMarco*. As such, the conduit 224 in *Gish* does not couple directly to a bowl fill valve inlet port.

Therefore, neither *DeMarco* nor *Gish* show or suggest coupling a bowl fill valve inlet port of a bowl fill valve directly to a bowl fill outlet port. As such,

coupling a bowl fill valve inlet port of a bowl fill valve directly to a bowl fill outlet port is not well-known.

Additionally, Applicants respectfully traverse any findings in the Office Action that coupling a bowl fill valve inlet port of a bowl fill valve directly to a bowl fill outlet port is inherent in *DeMarco* or *Gish*. As discussed above, in *DeMarco*, the flexible tube 22 connects the reseal valve 36 to the water control assembly 18. As such, it is apparent in *DeMarco* that the reseal valve 36 is not directly coupled to the water control assembly 18. Similarly, in *Gish*, the conduit 224 connects to a flexible tube. As such, it is apparent in *Gish* that a bowl fill valve inlet port of a bowl fill valve is not directly coupled to the conduit 224. Therefore, coupling a bowl fill valve inlet port of a bowl fill valve directly to a bowl fill outlet port is not inherent in *DeMarco* or *Gish*.

With respect to the claim element "engaging an annular groove with an annular protrusion, wherein the bowl fill valve inlet port is affixed to the bowl fill outlet port via the annular groove and the annular protrusion," page 3 of the Office Action alleges:

> It is also well-known to one skill in the art to realize that hose 22 of DeMarco is smooth by itself but once fitted over a protrusion structure such as 44 would inherently expand to form an annular groove. Just because the prior does not state the inherently well-known facts, it doesn't exclude those inherently well-known facts exists.

Applicants respectfully disagree. FIG. 2 of *DeMarco* is provided below:

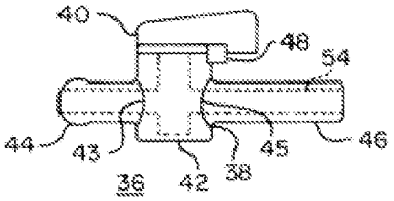

FIG. 2

Col. 3, lines 54-57, of *DeMarco* states:

> In accordance with the instant invention, a flow control or reseal valve 36 is interposed in reseal hose 22. Valve 36 fits easily into hose 22 by merely cutting the tube and inserting valve 36 into the resulting ends of hose 22.

Thus, it appears that the tubular stem 44 in *DeMarco* merely inserts into the reseal hose 22. From FIG. 1 of *DeMarco*, the reseal hose 22 appears to have a smooth interior that stretches to accommodate the valve 36 being inserted into the reseal hose 22. The Office Action appears to allege that stretching the reseal hose 22 is the same as "engaging an annular groove." However, Applicants respectfully submit that such an interpretation is unreasonably broad. A person having ordinary skill in the art would understand that stretching a flexible hose 22 is not the same as "coupling … by engaging an annular groove with an annular protrusion, wherein the bowl fill valve inlet port is affixed to the bowl fill outlet port via the annular groove and the annular protrusion."

Additionally, Applicants respectfully traverse any findings in the Office Action that "engaging an annular groove with an annular protrusion, wherein the bowl fill valve inlet port is affixed to the bowl fill outlet port via the annular groove and the annular protrusion" is well-known or is inherent. As discussed above, *DeMarco* fails to disclose or render obvious an annular groove, much less

coupling a bowl fill valve inlet port by engaging an annular groove with an annular protrusion. For at least this reason, Applicants respectfully submit that "engaging an annular groove with an annular protrusion, wherein the bowl fill valve inlet port is affixed to the bowl fill outlet port via the annular groove and the annular protrusion" is neither well-known nor inherent in *DeMarco*.

Therefore, the combination of the cited references fails to disclose or render obvious all of the elements of claim 10. For at least this reason, Applicants respectfully request that the rejection of claim 10 be withdrawn. In addition, Applicants respectfully request that the rejections of claims 11-12 be withdrawn as depending from claim 10.

II. Rejections of Claims 1-9 and 13-15 under 35 U.S.C. § 103

Page 3 of the Office Action indicates that claims 1-9 and 13-15 are rejected under 35 U.S.C. § 103(a) as allegedly being unpatentable over *DeMarco*, as evidenced by *Gish*, in view of U.S. Patent 5,624,073 ("*Mueller*"). In order to establish a *prima facie* case of obviousness under 35 U.S.C. § 103, the Examiner must show that each and every element of the claim is described or suggested by the prior art or would have been obvious in view of the prior art. *See In re Fine*, 837 F.2d 1071, 1073-1074 (Fed. Cir. 1988); *Ex Parte Wada and Murphy*, Appeal 2007-3733 (BPAI 2008); *See also, KSR Int'l v. Teleflex, Inc.*, 550 U.S. 398, 411 (2007) (claim deemed obvious to one of ordinary skill where all claim elements were disclosed in the cited prior art references). In addition, "[r]ejections on obviousness grounds cannot be sustained by mere conclusory

statements; instead, there must be some articulated reasoning with some rational underpinning to support the legal conclusion of obviousness." *KSR Int'l*, 550 U.S. at 418 (quoting *In re Kahn*, 441 F.3d 977, 988 (Fed. Cir. 2006)). Applicants respectfully request that the rejections of claims 1-9 and 13-15 be withdrawn for at least the following reasons.

A. Claims 1-9

Claim 1 recites as follows:

> 1. A toilet fill valve, comprising:
> a water inlet;
> a first water outlet configured to supply water to a toilet tank;
> a bowl fill outlet port radially extending from a portion of a body of the toilet fill valve, the bowl fill outlet port being operatively coupled to the water inlet, and the bowl fill outlet port comprising an integrally molded portion of the body of the toilet fill valve;
> a bowl fill valve having a bowl fill valve inlet port and a bowl fill valve outlet port, wherein the bowl fill valve inlet port is compatible with the bowl fill outlet port and ***the bowl fill valve inlet port being coupled to the bowl fill outlet port and establishing direct contact between the bowl fill outlet port and the bowl fill valve inlet port, wherein the bowl fill valve inlet port and the bowl fill valve outlet port each comprise an integrally molded portion of the bowl fill valve***;
> the bowl fill valve being configured to supply an adjustable flow of water out the bowl fill valve outlet port for filling a toilet bowl during a flush cycle of a toilet; and
> the bowl fill valve being affixed to the bowl fill outlet port by an annular protrusion being snap-fit into an annular groove.

(*Emphasis added*). Applicants respectfully submit that the combination of the cited references fails to disclose or render obvious at least the elements of claim 1 that are emphasized above.

To reject claim 1, the Office Action appears to rely on the same rationale that was provided in the Non-Final Office Action dated July 12, 2012. With respect to the claim element "the bowl fill valve inlet port being coupled to the bowl fill outlet port and establishing direct contact between the bowl fill outlet port and the bowl fill valve inlet port, wherein the bowl fill valve inlet port and the bowl fill valve outlet port each comprise an integrally molded portion of the bowl fill valve," page 3 of the Non-Final Office Action alleged:

> DeMarco discloses a toilet fill valve (Fig. 1) comprising … a bowl fill outlet port-radially extending from a portion of a body of the toilet fill valve, the bowl fill outlet port being operatively coupled to the water inlet; a bowl fill valve (36) having a bowl fill valve inlet port and a bowl fill valve outlet port, wherein the bowl fill valve inlet port is compatible with the bowl fill outlet port and the bowl fill valve inlet port being coupled to the bowl fill outlet port;

Applicants respectfully disagree. It appears that the Office Action is alleging that the reseal valve 36 in *DeMarco* is the same as "a bowl fill valve" and that the portion of the water control assembly 18 that connects to the reseal hose 22 is the same as "a bowl outlet port," as recited in claim 1. However, as discussed above, it appears that the reseal valve 36 in *DeMarco* is inserted into the reseal hose 22, and the reseal hose 22 appears to be attached to the water control assembly 18. In other words, it appears that the reseal hose 22 connects the reseal valve 36 to the water control assembly 18.

However, claim 1 specifically recites "the bowl fill valve inlet port being coupled to the bowl fill outlet port and establishing ***direct contact*** between the bowl fill outlet port and the bowl fill valve inlet port" (*emphasis*

added). In *DeMarco*, the reseal valve 36 and the water control assembly 18 are not in direct contact.

When responding to Applicants' previous arguments, pages 3-4 of the Office Action allege:

> ***[H]ose 22 to the left of 36 is considered part of the valve 36***. With that said, 36 and 22 to the left thereof is considered as the bowl fill valve and the end to the left of hose 22 does have an inlet port which is being considered as the "bowl fill valve inlet port" that is directly contact with the bowl fill outlet port.

(*Emphasis added*). Applicants respectfully disagree and submit that the interpretation provided by the Office Action is inconsistent with the claim language. It appears that the Office Action is interpreting the hose 22 and the valve 36 combined to be the same as "a bowl fill valve having a bowl fill valve inlet port." However, the Applicants' claim language itself sets forth that "the bowl fill valve inlet port and the bowl fill valve outlet port each comprise an integrally molded portion of the bowl fill valve." From FIG. 1 and col. 3, lines 54-57, of *DeMarco*, it is apparent that the reseal valve 36 is a component that is distinct from the reseal hose 22 and that the reseal valve 36 merely inserts into the flexible reseal hose 22. As such, it is self-evident that the reseal hose 22 is not an integrally molded portion of the reseal valve 36. Accordingly, the interpretation provided by the Office Action is inconsistent with Applicants' claim language and is therefore unreasonably broad.

Mueller does not disclose or render obvious "the bowl fill valve inlet port being coupled to the bowl fill outlet port and establishing direct contact between the bowl fill outlet port and the bowl fill valve inlet port, wherein the bowl fill valve

inlet port and the bowl fill valve outlet port each comprise an integrally molded portion of the bowl fill valve," nor does the Office Action rely on *Mueller* when alleging that these elements are disclosed in the cited references. Instead, *Mueller* appears to be directed towards a diverter valve for shower spray systems (*See Mueller*, abstract).

Therefore, the combination of the cited references fails to disclose or render obvious all of the elements of claim 1. For at least this reason, Applicants respectfully request that the rejection of claim 1 be withdrawn. In addition, Applicants respectfully request that the rejections of claims 2-9 be withdrawn as depending from claim 1.

B. Claims 13-15

As discussed above, the combination of *DeMarco* and *Gish* fails to disclose or render obvious "coupling a bowl fill valve inlet port of a bowl fill valve directly to the bowl fill outlet port by engaging an annular groove with an annular protrusion, wherein the bowl fill valve inlet port is affixed to the bowl fill outlet port via the annular groove and the annular protrusion," as recited in claim 10, from which claims 13-15 depend. *Mueller* does not disclose or render obvious these claim elements, nor does the Office Action rely on *Mueller* when alleging that these elements are disclosed in the cited references. Instead, *Mueller* appears to be directed towards a diverter valve for shower spray systems (*See Mueller*, abstract).

Therefore, the combination of the cited references fails to disclose or render obvious all of the elements of claim 10, from which claims 13-15 depend. For at least this additional reason, Applicants respectfully request that the rejections of claims 13-15 be withdrawn.

CONCLUSION

It is requested that all outstanding objections and rejections be withdrawn and that this application and all presently pending claims be allowed to issue. If the Examiner has any questions or comments regarding this Response, the Examiner is encouraged to telephone the undersigned counsel of Applicants.

Respectfully submitted,

/RDG/

_____

Robert D. Gravois
Registration Number: 67,224

THOMAS|HORSTEMEYER, LLP
Customer Number 24504
(770) 933-9500

PTO/AIA/22 (03-13)
Approved for use through 3/31/2013. OMB 0651-0031
U.S. Patent and Trademark Office; U.S. DEPARTMENT OF COMMERCE
Under the Paperwork Reduction Act of 1995, no persons are required to respond to a collection of information unless it displays a valid OMB control number.

PETITION FOR EXTENSION OF TIME UNDER 37 CFR 1.136(a)

Docket Number (Optional): 171901-1033

Application Number: 13/346,355

Filed: January 9, 2012

For: Toilet Fill Valve with Adjustable Bowl Fill Flow

Art Unit:

Examiner:

This is a request under the provisions of 37 CFR 1.136(a) to extend the period for filing a reply in the above-identified application.

The requested extension and fee are as follows (check time period desired and enter the appropriate fee below):

		Fee	Small Entity Fee	Micro Entity Fee	
☑	One month (37 CFR 1.17(a)(1))	$200	$100	$50	$ 100.00
☐	Two months (37 CFR 1.17(a)(2))	$600	$300	$150	$
☐	Three months (37 CFR 1.17(a)(3))	$1,400	$700	$350	$
☐	Four months (37 CFR 1.17(a)(4))	$2,200	$1,100	$550	$
☐	Five months (37 CFR 1.17(a)(5))	$3,000	$1,500	$750	$

☑ Applicant asserts small entity status. See 37 CFR 1.27.

☐ Applicant certifies micro entity status. See 37 CFR 1.29.
Form PTO/SB/15A or B or equivalent must either be enclosed or have been submitted previously.

☐ A check in the amount of the fee is enclosed.

☐ Payment by credit card. Form PTO-2038 is attached.

☐ The Director has already been authorized to charge fees in this application to a Deposit Account.

☑ The Director is hereby authorized to charge any fees which may be required, or credit any overpayment, to Deposit Account Number 20-0778.

☑ Payment made via EFS-Web.

WARNING: Information on this form may become public. Credit card information should not be included on this form. Provide credit card information and authorization on PTO-2038.

I am the

☐ applicant.

☐ attorney or agent of record. Registration number _____.

☑ attorney or agent acting under 37 CFR 1.34. Registration number 67,224.

/RDG/	2013-05-23
Signature	Date
Robert D. Gravois	770-933-9500
Typed or printed name	Telephone Number

NOTE: This form must be signed in accordance with 37 CFR 1.33. See 37 CFR 1.4 for signature requirements and certifications. Submit multiple forms if more than one signature is required, see below*.

☐ * Total of _____ forms are submitted.

This collection of information is required by 37 CFR 1.136(a). The information is required to obtain or retain a benefit by the public, which is to file (and by the USPTO to process) an application. Confidentiality is governed by 35 U.S.C. 122 and 37 CFR 1.11 and 1.14. This collection is estimated to take 6 minutes to complete, including gathering, preparing, and submitting the completed application form to the USPTO. Time will vary depending upon the individual case. Any comments on the amount of time you require to complete this form and/or suggestions for reducing this burden should be sent to the Chief Information Officer, U.S. Patent and Trademark Office, U.S. Department of Commerce, P.O. Box 1450, Alexandria, VA 22313-1450. DO NOT SEND FEES OR COMPLETED FORMS TO THIS ADDRESS. SEND TO: Mail Stop PCT, Commissioner for Patents, P.O. Box 1450, Alexandria, VA 22313-1450.

Privacy Act Statement

The **Privacy Act of 1974 (P.L. 93-579)** requires that you be given certain information in connection with your submission of the attached form related to a patent application or patent. Accordingly, pursuant to the requirements of the Act, please be advised that: (1) the general authority for the collection of this information is 35 U.S.C. 2(b)(2); (2) furnishing of the information solicited is voluntary; and (3) the principal purpose for which the information is used by the U.S. Patent and Trademark Office is to process and/or examine your submission related to a patent application or patent. If you do not furnish the requested information, the U.S. Patent and Trademark Office may not be able to process and/or examine your submission, which may result in termination of proceedings or abandonment of the application or expiration of the patent.

The information provided by you in this form will be subject to the following routine uses:

1. The information on this form will be treated confidentially to the extent allowed under the Freedom of Information Act (5 U.S.C. 552) and the Privacy Act (5 U.S.C 552a). Records from this system of records may be disclosed to the Department of Justice to determine whether disclosure of these records is required by the Freedom of Information Act.
2. A record from this system of records may be disclosed, as a routine use, in the course of presenting evidence to a court, magistrate, or administrative tribunal, including disclosures to opposing counsel in the course of settlement negotiations.
3. A record in this system of records may be disclosed, as a routine use, to a Member of Congress submitting a request involving an individual, to whom the record pertains, when the individual has requested assistance from the Member with respect to the subject matter of the record.
4. A record in this system of records may be disclosed, as a routine use, to a contractor of the Agency having need for the information in order to perform a contract. Recipients of information shall be required to comply with the requirements of the Privacy Act of 1974, as amended, pursuant to 5 U.S.C. 552a(m).
5. A record related to an International Application filed under the Patent Cooperation Treaty in this system of records may be disclosed, as a routine use, to the International Bureau of the World Intellectual Property Organization, pursuant to the Patent Cooperation Treaty.
6. A record in this system of records may be disclosed, as a routine use, to another federal agency for purposes of National Security review (35 U.S.C. 181) and for review pursuant to the Atomic Energy Act (42 U.S.C. 218(c)).
7. A record from this system of records may be disclosed, as a routine use, to the Administrator, General Services, or his/her designee, during an inspection of records conducted by GSA as part of that agency's responsibility to recommend improvements in records management practices and programs, under authority of 44 U.S.C. 2904 and 2906. Such disclosure shall be made in accordance with the GSA regulations governing inspection of records for this purpose, and any other relevant (*i.e.*, GSA or Commerce) directive. Such disclosure shall not be used to make determinations about individuals.
8. A record from this system of records may be disclosed, as a routine use, to the public after either publication of the application pursuant to 35 U.S.C. 122(b) or issuance of a patent pursuant to 35 U.S.C. 151. Further, a record may be disclosed, subject to the limitations of 37 CFR 1.14, as a routine use, to the public if the record was filed in an application which became abandoned or in which the proceedings were terminated and which application is referenced by either a published application, an application open to public inspection or an issued patent.
9. A record from this system of records may be disclosed, as a routine use, to a Federal, State, or local law enforcement agency, if the USPTO becomes aware of a violation or potential violation of law or regulation.

Electronic Patent Application Fee Transmittal

Application Number:	13346355
Filing Date:	09-Jan-2012
Title of Invention:	Toilet Fill Valve with Adjustable Bowl Fill Flow
First Named Inventor/Applicant Name:	Michael J. Schuster
Filer:	Robert D. Gravois/mary meegan
Attorney Docket Number:	171901-1033

Filed as Small Entity

Utility under 35 USC 111(a) Filing Fees

Description	Fee Code	Quantity	Amount	Sub-Total in USD($)
Basic Filing:				
Pages:				
Claims:				
Miscellaneous-Filing:				
Petition:				
Patent-Appeals-and-Interference:				
Post-Allowance-and-Post-Issuance:				
Extension-of-Time:				
Extension - 1 month with $0 paid	2251	1	100	100

Description	Fee Code	Quantity	Amount	Sub-Total in USD($)
Miscellaneous:				
		Total in USD ($)		**100**

Electronic Acknowledgement Receipt	
EFS ID:	15855104
Application Number:	13346355
International Application Number:	
Confirmation Number:	7392
Title of Invention:	Toilet Fill Valve with Adjustable Bowl Fill Flow
First Named Inventor/Applicant Name:	Michael J. Schuster
Customer Number:	24504
Filer:	Robert D. Gravois/mary meegan
Filer Authorized By:	Robert D. Gravois
Attorney Docket Number:	171901-1033
Receipt Date:	23-MAY-2013
Filing Date:	09-JAN-2012
Time Stamp:	14:41:24
Application Type:	Utility under 35 USC 111(a)

Payment information:

Submitted with Payment	yes
Payment Type	Credit Card
Payment was successfully received in RAM	$100
RAM confirmation Number	1043
Deposit Account	200778
Authorized User	RISLEY, DAVID R.

The Director of the USPTO is hereby authorized to charge indicated fees and credit any overpayment as follows:

Charge any Additional Fees required under 37 C.F.R. Section 1.16 (National application filing, search, and examination fees)

Charge any Additional Fees required under 37 C.F.R. Section 1.17 (Patent application and reexamination processing fees)

Charge any Additional Fees required under 37 C.F.R. Section 1.21 (Miscellaneous fees and charges)

File Listing:

Document Number	Document Description	File Name	File Size(Bytes)/ Message Digest	Multi Part /.zip	Pages (if appl.)
1	Amendment After Final	01844300.PDF	197669 a954087b1ef5b0a08d989d5bec2b1f2276597273	no	19
Warnings:					
Information:					
2	Extension of Time	01844059.PDF	151704 06f1efdb7b4e86b36a8f569a4f0cb9543b5038cf	no	2
Warnings:					
Information:					
3	Fee Worksheet (SB06)	fee-info.pdf	30226 3495d5bafaec1c322ca07501aa6d1d083282f5e6	no	2
Warnings:					
Information:					
		Total Files Size (in bytes):	379599		

This Acknowledgement Receipt evidences receipt on the noted date by the USPTO of the indicated documents, characterized by the applicant, and including page counts, where applicable. It serves as evidence of receipt similar to a Post Card, as described in MPEP 503.

<u>New Applications Under 35 U.S.C. 111</u>
If a new application is being filed and the application includes the necessary components for a filing date (see 37 CFR 1.53(b)-(d) and MPEP 506), a Filing Receipt (37 CFR 1.54) will be issued in due course and the date shown on this Acknowledgement Receipt will establish the filing date of the application.

<u>National Stage of an International Application under 35 U.S.C. 371</u>
If a timely submission to enter the national stage of an international application is compliant with the conditions of 35 U.S.C. 371 and other applicable requirements a Form PCT/DO/EO/903 indicating acceptance of the application as a national stage submission under 35 U.S.C. 371 will be issued in addition to the Filing Receipt, in due course.

<u>New International Application Filed with the USPTO as a Receiving Office</u>
If a new international application is being filed and the international application includes the necessary components for an international filing date (see PCT Article 11 and MPEP 1810), a Notification of the International Application Number and of the International Filing Date (Form PCT/RO/105) will be issued in due course, subject to prescriptions concerning national security, and the date shown on this Acknowledgement Receipt will establish the international filing date of the application.

PTO/SB/06 (09-11)
Approved for use through 1/31/2014. OMB 0651-0032
U.S. Patent and Trademark Office; U.S. DEPARTMENT OF COMMERCE
Under the Paperwork Reduction Act of 1995, no persons are required to respond to a collection of information unless it displays a valid OMB control number.

PATENT APPLICATION FEE DETERMINATION RECORD Substitute for Form PTO-875	Application or Docket Number 13/346,355	Filing Date 01/09/2012	☐ To be Mailed

ENTITY: ☐ LARGE ☒ SMALL ☐ MICRO

APPLICATION AS FILED – PART I

FOR	(Column 1) NUMBER FILED	(Column 2) NUMBER EXTRA	RATE ($)	FEE ($)
☐ BASIC FEE (37 CFR 1.16(a), (b), or (c))	N/A	N/A	N/A	
☐ SEARCH FEE (37 CFR 1.16(k), (i), or (m))	N/A	N/A	N/A	
☐ EXAMINATION FEE (37 CFR 1.16(o), (p), or (q))	N/A	N/A	N/A	
TOTAL CLAIMS (37 CFR 1.16(i))	minus 20 =	*	X $ =	
INDEPENDENT CLAIMS (37 CFR 1.16(h))	minus 3 =	*	X $ =	
☐ APPLICATION SIZE FEE (37 CFR 1.16(s))	If the specification and drawings exceed 100 sheets of paper, the application size fee due is $310 ($155 for small entity) for each additional 50 sheets or fraction thereof. See 35 U.S.C. 41(a)(1)(G) and 37 CFR 1.16(s).			
☐ MULTIPLE DEPENDENT CLAIM PRESENT (37 CFR 1.16(j))				
* If the difference in column 1 is less than zero, enter "0" in column 2.			TOTAL	

APPLICATION AS AMENDED – PART II

AMENDMENT	05/23/2013	(Column 1) CLAIMS REMAINING AFTER AMENDMENT		(Column 2) HIGHEST NUMBER PREVIOUSLY PAID FOR	(Column 3) PRESENT EXTRA	RATE ($)	ADDITIONAL FEE ($)
	Total (37 CFR 1.16(i))	* 15	Minus	** 20	= 0	X $40 =	0
	Independent (37 CFR 1.16(h))	* 2	Minus	***3	= 0	X $210 =	0
	☐ Application Size Fee (37 CFR 1.16(s))						
	☐ FIRST PRESENTATION OF MULTIPLE DEPENDENT CLAIM (37 CFR 1.16(j))						
						TOTAL ADD'L FEE	**0**

AMENDMENT		(Column 1) CLAIMS REMAINING AFTER AMENDMENT		(Column 2) HIGHEST NUMBER PREVIOUSLY PAID FOR	(Column 3) PRESENT EXTRA	RATE ($)	ADDITIONAL FEE ($)
	Total (37 CFR 1.16(i))	*	Minus	**	=	X $ =	
	Independent (37 CFR 1.16(h))	*	Minus	***	=	X $ =	
	☐ Application Size Fee (37 CFR 1.16(s))						
	☐ FIRST PRESENTATION OF MULTIPLE DEPENDENT CLAIM (37 CFR 1.16(j))						
						TOTAL ADD'L FEE	

* If the entry in column 1 is less than the entry in column 2, write "0" in column 3.
** If the "Highest Number Previously Paid For" IN THIS SPACE is less than 20, enter "20".
*** If the "Highest Number Previously Paid For" IN THIS SPACE is less than 3, enter "3".
The "Highest Number Previously Paid For" (Total or Independent) is the highest number found in the appropriate box in column 1.

LIE
/BURNELL L. ROSS/

This collection of information is required by 37 CFR 1.16. The information is required to obtain or retain a benefit by the public which is to file (and by the USPTO to process) an application. Confidentiality is governed by 35 U.S.C. 122 and 37 CFR 1.14. This collection is estimated to take 12 minutes to complete, including gathering, preparing, and submitting the completed application form to the USPTO. Time will vary depending upon the individual case. Any comments on the amount of time you require to complete this form and/or suggestions for reducing this burden, should be sent to the Chief Information Officer, U.S. Patent and Trademark Office, U.S. Department of Commerce, P.O. Box 1450, Alexandria, VA 22313-1450. DO NOT SEND FEES OR COMPLETED FORMS TO THIS ADDRESS. **SEND TO: Commissioner for Patents, P.O. Box 1450, Alexandria, VA 22313-1450.**
If you need assistance in completing the form, call 1-800-PTO-9199 and select option 2.

UNITED STATES PATENT AND TRADEMARK OFFICE

UNITED STATES DEPARTMENT OF COMMERCE
United States Patent and Trademark Office
Address: COMMISSIONER FOR PATENTS
P.O. Box 1450
Alexandria, Virginia 22313-1450
www.uspto.gov

APPLICATION NO.	FILING DATE	FIRST NAMED INVENTOR	ATTORNEY DOCKET NO.	CONFIRMATION NO.
13/346,355	01/09/2012	Michael J. Schuster	171901-1033	7392

24504 7590 02/04/2013
THOMAS | HORSTEMEYER, LLP
400 INTERSTATE NORTH PARKWAY SE
SUITE 1500
ATLANTA, GA 30339

EXAMINER
NGUYEN, TUAN N

ART UNIT	PAPER NUMBER
3751	

NOTIFICATION DATE	DELIVERY MODE
02/04/2013	ELECTRONIC

Please find below and/or attached an Office communication concerning this application or proceeding.

The time period for reply, if any, is set in the attached communication.

Notice of the Office communication was sent electronically on above-indicated "Notification Date" to the following e-mail address(es):

uspatents@tkhr.com
kristen.layton@tkhr.com
ozzie.liggins@tkhr.com

PTOL-90A (Rev. 04/07)

Office Action Summary	Application No.	Applicant(s)	
	13/346,355	SCHUSTER ET AL.	
	Examiner	Art Unit	
	TUAN N. NGUYEN	3751	

-- The MAILING DATE of this communication appears on the cover sheet with the correspondence address --

Period for Reply

A SHORTENED STATUTORY PERIOD FOR REPLY IS SET TO EXPIRE 3 MONTH(S) OR THIRTY (30) DAYS, WHICHEVER IS LONGER, FROM THE MAILING DATE OF THIS COMMUNICATION.

- Extensions of time may be available under the provisions of 37 CFR 1.136(a). In no event, however, may a reply be timely filed after SIX (6) MONTHS from the mailing date of this communication.
- If NO period for reply is specified above, the maximum statutory period will apply and will expire SIX (6) MONTHS from the mailing date of this communication.
- Failure to reply within the set or extended period for reply will, by statute, cause the application to become ABANDONED (35 U.S.C. § 133). Any reply received by the Office later than three months after the mailing date of this communication, even if timely filed, may reduce any earned patent term adjustment. See 37 CFR 1.704(b).

Status

1)☒ Responsive to communication(s) filed on *09 October 2012*.

2a)☒ This action is **FINAL**. 2b)☐ This action is non-final.

3)☐ Since this application is in condition for allowance except for formal matters, prosecution as to the merits is closed in accordance with the practice under *Ex parte Quayle*, 1935 C.D. 11, 453 O.G. 213.

Disposition of Claims

4)☒ Claim(s) *1-15* is/are pending in the application.

4a) Of the above claim(s) _____ is/are withdrawn from consideration.

5)☐ Claim(s) _____ is/are allowed.

6)☒ Claim(s) *1-15* is/are rejected.

7)☐ Claim(s) _____ is/are objected to.

8)☐ Claim(s) _____ are subject to restriction and/or election requirement.

Application Papers

9)☐ The specification is objected to by the Examiner.

10)☐ The drawing(s) filed on _____ is/are: a)☐ accepted or b)☐ objected to by the Examiner.

Applicant may not request that any objection to the drawing(s) be held in abeyance. See 37 CFR 1.85(a).

Replacement drawing sheet(s) including the correction is required if the drawing(s) is objected to. See 37 CFR 1.121(d).

11)☐ The oath or declaration is objected to by the Examiner. Note the attached Office Action or form PTO-152.

Priority under 35 U.S.C. § 119

12)☐ Acknowledgment is made of a claim for foreign priority under 35 U.S.C. § 119(a)-(d) or (f).

a)☐ All b)☐ Some * c)☐ None of:

1.☐ Certified copies of the priority documents have been received.

2.☐ Certified copies of the priority documents have been received in Application No. _____.

3.☐ Copies of the certified copies of the priority documents have been received in this National Stage application from the International Bureau (PCT Rule 17.2(a)).

* See the attached detailed Office action for a list of the certified copies not received.

Attachment(s)

1) ☒ Notice of References Cited (PTO-892)

2) ☐ Notice of Draftsperson's Patent Drawing Review (PTO-948)

3) ☐ Information Disclosure Statement(s) (PTO/SB/08) Paper No(s)/Mail Date _____.

4) ☐ Interview Summary (PTO-413) Paper No(s)/Mail Date. _____ .

5) ☐ Notice of Informal Patent Application

6) ☐ Other: _____.

Fluidmaster, Inc. - EX1009, Page 091
IPR2024-00633 (Fluidmaster Inc v. Danco Inc)

DETAILED ACTION

Response to Arguments

Applicant's arguments filed 10/9/12 have been fully considered but they are not persuasive as indicated in the rejections below. The amendment in line 2 of claim 10 has broadened up the scope of the claim(s).

Claim Rejections - 35 USC § 102

The following is a quotation of the appropriate paragraphs of 35 U.S.C. 102 that form the basis for the rejections under this section made in this Office action:

> A person shall be entitled to a patent unless –
>
> (b) the invention was patented or described in a printed publication in this or a foreign country or in public use or on sale in this country, more than one year prior to the date of application for patent in the United States.

Claims 10-12 are rejected under 35 U.S.C. 102(b) as being anticipated US 5,708,991 (hereinafter DeMarco) as evidenced by US 6,047,725 (hereinafter Gish).

Applicant contends that DeMarco reseal hose 22 is not the same as "the bowl fill outlet port comprising ***an integrally molded portion*** of the body of the toilet fill valve" and that DeMarco fails to show or suggest “coupling a bowl fill valve inlet port of a bowl fill valve ***directly*** to the bowl fill outlet port.” These are found not persuasive because hose 22 to the left of valve 36 serves as an inlet connection for valve 36; therefore, it is directly couple the bowl fill valve inlet port to the bowl fill outlet port. It is reminded that Applicant is using the term "comprising" an integrally molded portion of the body of the toilet fill valve. DeMarco is silenced as to the process of making the body of the toilet fill valve and outlet that radially extends from a portion of the body because such process is inherently well-known in the art given the particular shape and structure of the toilet fill

valve and body (16 and 18) of DeMarco as shown. The Gish reference is provided herewith as evidence of such well-known process in that the body 204 and outlet 224 are integrally molded (see Gish col. 4, line 19+). It is also well-known to one skill in the art to realize that hose 22 of DeMarco is smooth by itself but once fitted over a protrusion structure such as 44 would inherently expand to the form of the protrusion 44 and therefore would inherently form an annular groove. Just because the prior does not state the inherently well-known facts, it doesn't exclude those inherently well-known facts exist.

Claim Rejections - 35 USC § 103

The following is a quotation of 35 U.S.C. 103(a) which forms the basis for all obviousness rejections set forth in this Office action:

> (a) A patent may not be obtained though the invention is not identically disclosed or described as set forth in section 102 of this title, if the differences between the subject matter sought to be patented and the prior art are such that the subject matter as a whole would have been obvious at the time the invention was made to a person having ordinary skill in the art to which said subject matter pertains. Patentability shall not be negatived by the manner in which the invention was made.

Claims 1-9 and 13-15 are rejected under 35 U.S.C. 103(a) as being unpatentable over DeMarco as evidenced by Gish, as discussed above, in view of Mueller as set forth in the previous office action.

Regarding claims 1-9, Applicant contends that DeMarco fails to teach "the bowl fill valve inlet port being coupled to the bowl fill outlet port and establishing direct contact between the bowl fill outlet port and the bowl fill valve inlet port." This is found not persuasive because hose 22 to the left of 36 is considered part of the valve 36. With that said, 36 and 22 to the left thereof is considered as the bowl fill valve and the end to

the left of hose 22 does have an inlet port which is being considered as the "bowl fill valve inlet port" that is directly contact with the bowl fill outlet port.

Conclusion

Applicant's amendment necessitated the new ground(s) of rejection presented in this Office action. Accordingly, **THIS ACTION IS MADE FINAL**. See MPEP § 706.07(a). Applicant is reminded of the extension of time policy as set forth in 37 CFR 1.136(a).

A shortened statutory period for reply to this final action is set to expire THREE MONTHS from the mailing date of this action. In the event a first reply is filed within TWO MONTHS of the mailing date of this final action and the advisory action is not mailed until after the end of the THREE-MONTH shortened statutory period, then the shortened statutory period will expire on the date the advisory action is mailed, and any extension fee pursuant to 37 CFR 1.136(a) will be calculated from the mailing date of the advisory action. In no event, however, will the statutory period for reply expire later than SIX MONTHS from the date of this final action.

Any inquiry concerning this communication or earlier communications from the examiner should be directed to TUAN N. NGUYEN whose telephone number is (571)272-4892. The examiner can normally be reached on Monday to Friday between 10am-6pm.

If attempts to reach the examiner by telephone are unsuccessful, the examiner's supervisor, Greg Huson can be reached on (571)272-4887. The fax phone number for the organization where this application or proceeding is assigned is 571-273-8300.

Information regarding the status of an application may be obtained from the Patent Application Information Retrieval (PAIR) system. Status information for published applications may be obtained from either Private PAIR or Public PAIR. Status information for unpublished applications is available through Private PAIR only. For more information about the PAIR system, see http://pair-direct.uspto.gov. Should you have questions on access to the Private PAIR system, contact the Electronic Business Center (EBC) at 866-217-9197 (toll-free). If you would like assistance from a USPTO Customer Service Representative or access to the automated information system, call 800-786-9199 (IN USA OR CANADA) or 571-272-1000.

/Tuan N Nguyen/
Primary Examiner, Art Unit 3751

Notice of References Cited	Application/Control No. 13/346,355	Applicant(s)/Patent Under Reexamination SCHUSTER ET AL.	
	Examiner TUAN N. NGUYEN	Art Unit 3751	Page 1 of 1

U.S. PATENT DOCUMENTS

*		Document Number Country Code-Number-Kind Code	Date MM-YYYY	Name	Classification
*	A	US-6,047,725 A	04-2000	Gish et al.	137/426
	B	US-			
	C	US-			
	D	US-			
	E	US-			
	F	US-			
	G	US-			
	H	US-			
	I	US-			
	J	US-			
	K	US-			
	L	US-			
	M	US-			

FOREIGN PATENT DOCUMENTS

*		Document Number Country Code-Number-Kind Code	Date MM-YYYY	Country	Name	Classification
	N					
	O					
	P					
	Q					
	R					
	S					
	T					

NON-PATENT DOCUMENTS

*		Include as applicable: Author, Title Date, Publisher, Edition or Volume, Pertinent Pages)
	U	
	V	
	W	
	X	

*A copy of this reference is not being furnished with this Office action. (See MPEP § 707.05(a).)
Dates in MM-YYYY format are publication dates. Classifications may be US or foreign.

IN THE UNITED STATES PATENT AND TRADEMARK OFFICE

In re the application of:	Confirmation: 7392
Schuster, *et al.*	Art Unit: 3751
Application Number: 13/346,355	Examiner: Nguyen, Tuan N
Filing Date: January 09, 2012	Docket No.: 171901-1033

Title: **TOILET FILL VALVE WITH ADJUSTABLE BOWL FILL FLOW**

RESPONSE TO NON-FINAL OFFICE ACTION DATED JULY 12, 2012

Mail Stop: Amendment
Commissioner for Patents
P.O. Box 1450
Alexandria, VA 22313-1450

Sir:

In regard to the outstanding non-final Office Action dated July 12, 2012, the following Response is submitted.

It is believed that no extensions of time or fees for net addition of claims are required, beyond those that may otherwise be provided for in documents accompanying this paper. However, in the event that additional extensions of time are necessary to allow consideration of this paper, such extensions are hereby petitioned under 37 C.F.R. § 1.136(a), and any fees required therefore (including fees for net addition of claims) are hereby authorized to be charged to Deposit Account No. 20-0778.

Please amend the above-identified application as follows

IN THE CLAIMS:

Please amend the claims as indicated below. The language being added is underlined ("__"), and the language being deleted contains a double strikethrough ("=").

1. (Currently Amended) A toilet fill valve, comprising:

a water inlet;

a first water outlet configured to supply water to a toilet tank;

a bowl fill outlet port radially extending from a portion of a body of the toilet fill valve, the bowl fill outlet port being operatively coupled to the water inlet, and the bowl fill outlet port comprising an integrally molded portion of the body of the toilet fill valve;

a bowl fill valve having a bowl fill valve inlet port and a bowl fill valve outlet port, wherein the bowl fill valve inlet port is compatible with the bowl fill outlet port and the bowl fill valve inlet port being coupled to the bowl fill outlet port and establishing direct contact between the bowl fill outlet port and the bowl fill valve inlet port, wherein the bowl fill valve inlet port and the bowl fill valve outlet port each comprise an integrally molded portion of the bowl fill valve;

the bowl fill valve being configured to supply an adjustable flow of water out the bowl fill valve outlet port for filling a toilet bowl during a flush cycle of a toilet; and

the bowl fill valve being affixed to the bowl fill outlet port by an ~~annual~~ annular protrusion being snap-fit into an annular groove.

2. (Original) The toilet fill valve of claim 1, wherein:

the annular protrusion extends from a first side wall of the bowl fill valve inlet port; and

the annular groove is in a second side wall of the bowl fill outlet port.

3. (Original) The toilet fill valve of claim 1, wherein:

the annular groove is in a first side wall of the bowl fill valve inlet port; and

the annular protrusion extends from a second side wall of the bowl fill outlet port.

4. (Original) The toilet fill valve of claim 1, wherein bowl fill valve extends beyond the bowl fill outlet port in a radial direction with respect to a portion of the body of the toilet fill valve.

5. (Original) The toilet fill valve of claim 1, further comprising:

a float;

an actuating arm coupled to the float, the actuating arm radially extending in an orthogonal direction relative to a longitudinal axis of the toilet fill valve; and

the bowl fill valve extending in an orthogonal direction relative to the longitudinal axis of the toilet fill valve, wherein the actuating arm is angularly offset relative to the bowl fill valve, thereby preventing an interference with the bowl fill valve and a translational stem extending from the float to a free end of the actuating arm.

6. (Original) The toilet fill valve of claim 1, wherein the bowl fill valve outlet port further comprises a nipple adapted to mate with an end of a tube.

7. (Original) The toilet fill valve of claim 1, wherein the bowl fill valve further comprises a number of biased positions.

8. (Original) The toilet fill valve of claim 1, further comprising:

a rib extending from a side wall of the bowl fill outlet port; and

a slot in a side wall of the bowl fill valve inlet port, the rib being inserted into the slot, thereby preventing rotation of the bowl fill valve with respect to the bowl fill outlet port.

9. (Original) The toilet fill valve of claim 1, further comprising:

a rib extending from a side wall of the bowl fill valve inlet port; and

a slot in a side wall of the bowl fill outlet port, the rib being inserted into the slot, thereby preventing rotation of the bowl fill valve with respect to the bowl fill outlet port.

10. (Currently Amended) A method for providing an adjustable bowl fill water flow ~~in~~ from a toilet fill valve, comprising the steps of:

operatively coupling a bowl fill outlet port that radially extends from a portion of a body of the toilet fill valve to a water inlet of the toilet fill valve, the bowl fill outlet port comprising an integrally molded portion of the body of the toilet fill valve; and

~~radially extending the bowl fill outlet port from a portion of a body of the toilet fill valve; and~~

coupling a bowl fill valve inlet port of a bowl fill valve directly to the bowl fill outlet port by engaging an annular groove with an annular protrusion, wherein the bowl fill valve inlet port is affixed to the bowl fill outlet port via the annular groove and the annular protrusion, the bowl fill valve inlet port being compatible with the bowl fill outlet port, and the bowl fill valve being configured to provide for the adjustable bowl fill water flow out a bowl fill valve outlet port of the bowl fill valve for filling a toilet bowl during a flush cycle of a toilet.

11. (Original) The method of claim 10, wherein:

the annular groove is associated with the bowl fill outlet port; and

the annular protrusion is associated with the bowl fill valve inlet port.

12. (Original) The method of claim 10, wherein:

the annular protrusion is associated with the bowl fill outlet port; and

the annular groove is associated with the bowl fill valve inlet port.

13. (Original) The method of claim 10, wherein the step of coupling of the bowl fill valve inlet port of the bowl fill valve directly to the bowl fill outlet port further comprises the step of mating a rib with a groove, thereby preventing rotation of the bowl fill valve with respect to the bowl fill outlet port.

14. (Original) The method of claim 13, wherein:

the rib is associated with the bowl fill outlet port; and

the groove is associated with the bowl fill valve inlet port.

15. (Original) The method of claim 13, wherein:

the groove is associated with the bowl fill outlet port; and

the rib is associated with the bowl fill valve inlet port.

REMARKS

As of entry of this Response, claims 1-15 remain pending in the present application. Claims 1 and 10 are currently amended. Reconsideration and allowance of the pending application and claims are respectfully requested.

I. Rejections of Claims 10-12 Under 35 U.S.C. § 102

Page 2 of the Office Action indicates that claims 10-12 are rejected under 35 U.S.C. § 102(b) as allegedly being anticipated by both U.S. Patent 4,980,932 (hereinafter "*Stemples*") and U.S. Patent 5,708,991 (hereinafter "*DeMarco*"). It is axiomatic that anticipation under § 102 "requires the disclosure in a single prior art reference of each element of the claim under construction." *W.L. Gore & Associates, Inc. v. Garlock, Inc.,* 220 U.S.P.Q. 303, 313 (Fed. Cir. 1983). Applicants respectfully request that the rejections of claims 10-12 be withdrawn for at least the following reasons.

A. Rejections of Claims 10-12 in View of *Stemples*

Currently amended claim 10 recites as follows:

> 10. A method for providing an adjustable bowl fill water flow from a toilet fill valve, comprising the steps of:
>
> operatively coupling a bowl fill outlet port that radially extends from a portion of a body of the toilet fill valve to a water inlet of the toilet fill valve, the bowl fill outlet port comprising an integrally molded portion of the body of the toilet fill valve; and
>
> ***coupling a bowl fill valve inlet port of a bowl fill valve directly to the bowl fill outlet port by engaging an annular groove with an annular protrusion, wherein the bowl fill valve inlet port is affixed to the bowl fill outlet port via the annular groove and the annular protrusion***, the bowl fill valve inlet port being compatible with the bowl fill outlet port, and the bowl fill valve being configured to provide for the adjustable bowl fill water flow out a bowl fill valve outlet port of the bowl fill valve for filling a toilet bowl during a flush cycle of a toilet.

(*Emphasis added*). Applicants respectfully submit that the cited reference fails to show or suggest at least the elements of independent claim 10 emphasized above.

In rejecting claim 10, page 2 of the Office Action alleges:

> Stemples discloses an adjustable bowl fill water with a bowl fill outlet port (AT) being coupling to a bowl fill valve (see Fig. 2) … .

Applicants respectfully disagree.

FIGS. 1 and 2 of *Stemples* are provided below:

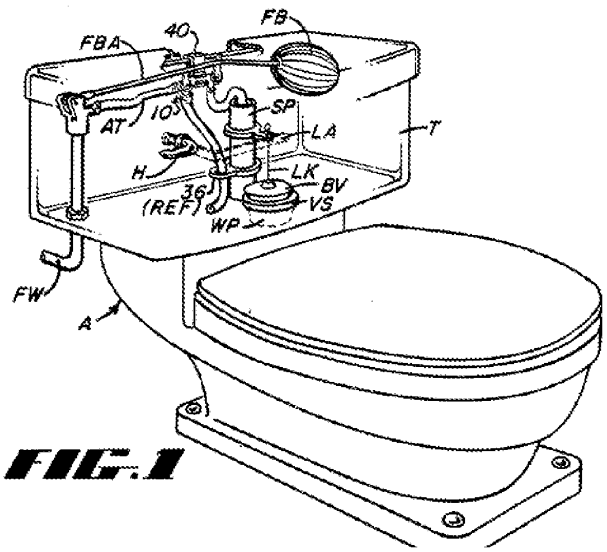

FIG. 1

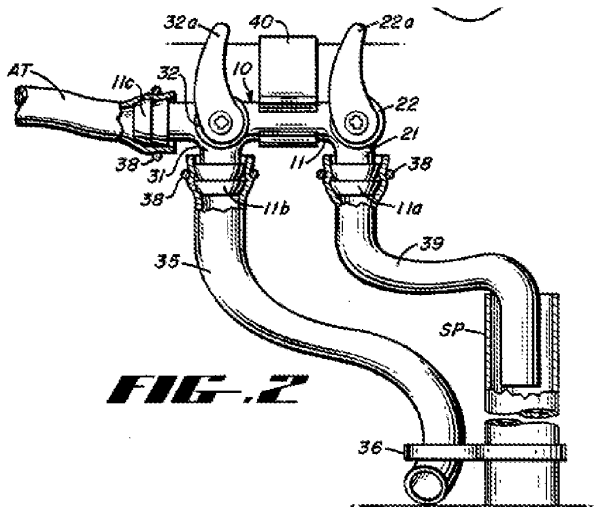

FIG. 2

It appears that the Office Action alleges that the afterfill tube AT and the flow splitting system 10 in *Stemples* are the same as “a bowl fill outlet port” and “a bowl fill valve,” respectively, as recited in claim 10. Currently amended claim 10 specifically recites that the bowl fill outlet port “compris[es] an integrally molded portion of the body of the toilet fill valve.” As shown in FIGS. 1 and 2 of *Stemples*, the afterfill tube AT, which the Office Action alleges is a bowl fill outlet port, appears to be a tube that connects the ballcock assembly FBA to the flow splitting system 10. However, the afterfill tube AT in *Stemples* is not ***an integrally molded portion*** of the ballcock assembly FBA. Instead, it appears that the afterfill tube AT is inserted on or into the ballcock assembly FBA. Thus, the afterfill tube AT is not the same as “the bowl fill outlet port comprising an integrally molded portion of the body of the toilet fill valve,” as recited in claim 10.

As such, Applicants respectfully submit that the cited reference fails to show or suggest "coupling a bowl fill valve inlet port of a bowl fill valve directly to the bowl fill outlet port," as recited in claim 10. In FIGS. 1 and 2 of *Stemples*, the flow splitting system 10 appears to be directly connected to the afterfill tube AT. However, as previously mentioned, the afterfill tube AT is not the same as a "bowl fill outlet port comprising an integrally molded portion of the body of the toilet fill valve." Because afterfill tube AT is not the same as "comprising an integrally molded portion of the body of the toilet fill valve," connecting the flow splitting system 10 to the afterfill tube AT does not show or suggest "coupling a bowl fill valve inlet port of a bowl fill valve ***directly*** to the bowl fill outlet port," (*emphasis added*) as recited in claim 10.

Additionally, Applicants respectfully submit that the cited reference fails to show or suggest "engaging ***an annular groove*** with an annular protrusion, wherein the bowl fill valve inlet port is affixed to the bowl fill outlet port via the annular groove and the annular protrusion," (*emphasis added*) as recited in claim 10. With respect to this element, page 2 of the Office Action alleges:

> Stemples discloses … a bowl fill valve inlet port engaging the outlet port by annular groove and annular protrusion (about 11c, see Fig. 2).

Applicants respectfully disagree. As best shown in FIG. 2 of *Stemples*, it appears that the afterfill tube AT is connected to the flow splitting system 10 by the end 11c. Col. 2, lines 45-50, of *Stemples* states:

> Each of the fitting ends may be shaped or formed for convenient connection, *e.g.*, in the manner of a barbed male shape which is conveniently insertable into the tubing such as the afterfill tube AT.

Thus, it appears that the afterfill tube AT is connected to the flow splitting system 10 by the barbed end 11c being inserted into the afterfill tube AT. However, the afterfill tube AT does not appear to include ***an annular groove***. Instead, it appears that the afterfill tube AT has a smooth interior wall and is flexible in order to accommodate the barbed end 11c. Thus, *Stemples* fails to show or suggest "coupling … by engaging an annular groove with an annular protrusion," as recited in claim 10.

Therefore, the cited reference fails to show or suggest all of the elements of claim 10. For at least this reason, Applicants respectfully request that the rejection of claim 10 in view of *Stemples* be withdrawn. In addition, Applicants request that the rejections of claims 11-12 be withdrawn as depending from claim 10.

B. Rejections of Claims 10-12 in View of *DeMarco*

Currently amended claim 10 recites as follows:

> 10. A method for providing an adjustable bowl fill water flow from a toilet fill valve, comprising the steps of:
>
> operatively coupling a bowl fill outlet port that radially extends from a portion of a body of the toilet fill valve to a water inlet of the toilet fill valve, the bowl fill outlet port comprising an integrally molded portion of the body of the toilet fill valve; and
>
> ***coupling a bowl fill valve inlet port of a bowl fill valve directly to the bowl fill outlet port by engaging an annular groove with an annular protrusion, wherein the bowl fill valve inlet port is affixed to the bowl fill outlet port via the annular groove and the annular protrusion***, the bowl fill valve inlet port being compatible with the bowl fill outlet port, and the bowl fill valve being configured to provide for the adjustable bowl fill water flow out a bowl fill valve outlet port of the bowl fill valve for filling a toilet bowl during a flush cycle of a toilet.

(*Emphasis added*). Applicants respectfully submit that the cited reference fails to show or suggest at least the elements of independent claim 10 emphasized above.

In rejecting claim 10, page 2 of the Office Action alleges:

> DeMarco discloses an adjustable bowl fill water with a bowl fill outlet port (defined by 22) being coupling to a bowl fill valve (36) with a bowl fill valve inlet port (44) … .

Applicants respectfully disagree. FIG. 1 of *DeMarco* is provided below:

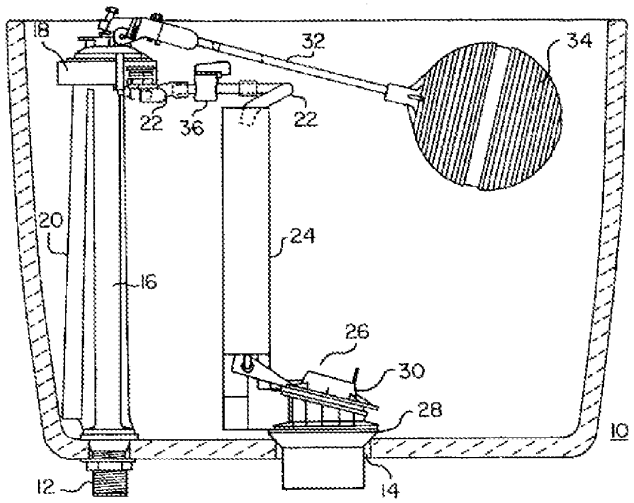

FIG. 1

It appears that the Office Action alleges that element 22 and element 36 in *DeMarco* are "a bowl fill outlet port" and "a bowl fill valve," respectively, as recited in claim 10. However, currently amended claim 10 recites that "the bowl fill outlet port compris[es] ***an integrally molded portion*** of the body of the toilet fill valve" (*emphasis added*). Col. 3, lines 16-26, of *DeMarco* states:

> Water control assembly 18 is provided in the tank for refilling water closet tank 10 with fresh water after flushing has occurred. Water enters the tank through a water closet filling tube 20 which extends downwardly from water control assembly 18 with its open end

> spaced a short distance from the bottom of the tank. Some fresh water is also supplied to a reseal hose 22 during refilling of the tank. Reseal hose 22 directs water into an overflow tube 24 of a flush valve 26.

Col. 3, lines 54-57, of *DeMarco* further states:

> In accordance with the instant invention, a flow control or reseal valve 36 is interposed in reseal hose 22. Valve 36 fits easily into hose 22 by merely cutting the tube and inserting valve 36 into the resulting ends of hose 22.

Thus, it appears that the reseal valve 36 is inserted in the reseal hose 22, and the reseal hose 22 appears to be attached to the water control assembly 18.

However, Applicants respectfully submit that the reseal hose 22 in *DeMarco* is not the same as a "bowl fill outlet port bowl fill outlet port comprising an integrally molded portion of the body of the toilet fill valve," as recited in claim 10. Instead, it appears that the reseal hose 22 in *DeMarco* is a tube that fits over a portion of the water control assembly 18. As such, the reseal hose 22 in *DeMarco* is not the same as "the bowl fill outlet port comprising ***an integrally molded portion*** of the body of the toilet fill valve," (*emphasis added*) as recited in claim 10.

Accordingly, Applicants submit that *DeMarco* fails to show or suggest "coupling a bowl fill valve inlet port of a bowl fill valve ***directly*** to the bowl fill outlet port." In *DeMarco*, it appears that the reseal valve 36 is connected to the reseal hose 22, which in turn is connected to the water control assembly 18. Thus, *DeMarco* fails to show or suggest "coupling a bowl fill valve inlet port of a bowl fill valve ***directly*** to the bowl fill outlet port," as recited in claim 10.

Additionally, the cited reference fails to show or suggest "engaging an annular groove with an annular protrusion, wherein the bowl fill valve inlet port is affixed to the bowl fill outlet port via the annular groove and the annular protrusion," as recited in claim 10. With respect to this element, page 2 of the Office Action alleges:

> Demarco discloses … engaging the outlet port by annular groove (in hose 22 cause by 44) and annular protrusion (see Fig. 2 at 44).

Applicants respectfully disagree. FIG. 2 of *DeMarco* is provided below:

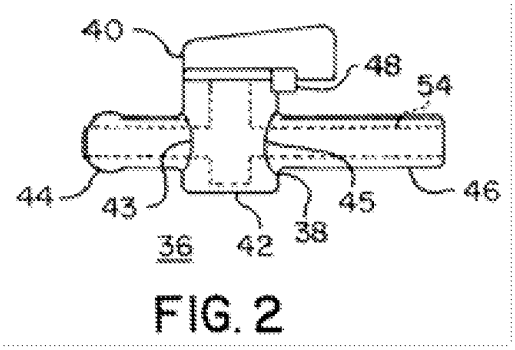

FIG. 2

Further, col. 3, lines 54-57, of *DeMarco* states:

> In accordance with the instant invention, a flow control or reseal valve 36 is interposed in reseal hose 22. Valve 36 fits easily into hose 22 by merely cutting the tube and inserting valve 36 into the resulting ends of hose 22.

It appears that the Office Action alleges that the tubular stem 44 is the same as "an annular protrusion" as recited in claim 10. However, claim 10 specifically recites "engaging an ***annular groove*** with an annular protrusion" (*emphasis added*). Applicants respectfully submit the tubular stem 44 in *DeMarco* does not engage an annular groove. Instead, it appears that the tubular stem 44 merely inserts into the reseal hose 22, which appears to have a smooth interior that

accommodates the valve 36 being inserted into the reseal hose 22. Therefore, *DeMarco* fails to show or suggest "engaging an annular groove with an annular protrusion, wherein the bowl fill valve inlet port is affixed to the bowl fill outlet port via the annular groove and the annular protrusion," as recited in claim 10.

Therefore, the cited reference fails to show or suggest all of the elements of claim 10. For at least this reason, Applicants respectfully request that the rejection of claim 10 be withdrawn. In addition, Applicants request that the rejections of claims 11-12 be withdrawn as depending from claim 10.

II. Rejections of Claims 1-9 and 13-15 Under 35 U.S.C. § 103

Page 3 of the Office Action indicates that claims 1-9 and 13-15 are rejected under 35 U.S.C. § 103(a) as allegedly being unpatentable over *DeMarco* in view of U.S. Patent 5,624,073 (hereinafter "*Mueller*"). Page 4 of the Office Action indicates that claims 13-15 are also rejected under 35 U.S.C. § 103(a) as allegedly being unpatentable over *Stemples* in view of *Mueller*. In order to establish a *prima facie* case of obviousness under 35 U.S.C. § 103, the Examiner must show that each and every element of the claim is described or suggested by the prior art or would have been obvious in view of the prior art. *See In re Fine*, 837 F.2d 1071, 1073-1074 (Fed. Cir. 1988); *Ex Parte Wada and Murphy*, Appeal 2007-3733 (BPAI 2008); *See also, KSR Int'l v. Teleflex, Inc.*, 550 U.S. 398, 411 (2007) (claim deemed obvious to one of ordinary skill where all claim elements were disclosed in the cited prior art references). In addition, "[r]ejections on obviousness grounds cannot be sustained by mere conclusory

statements; instead, there must be some articulated reasoning with some rational underpinning to support the legal conclusion of obviousness." *KSR Int'l*, 550 U.S. at 418 (quoting *In re Kahn*, 441 F.3d 977, 988 (Fed. Cir. 2006)). Applicant respectfully requests that the rejections of claims 1-9 and 13-15 be withdrawn for at least the following reasons.

A. Rejections of Claims 1-9 in View of *DeMarco* and *Mueller*

Independent claim 1 is currently amended to correct a minor typographical error. No substantive changes are imposed to the claim by this amendment.

Independent claim 1 recites as follows:

> 1. A toilet fill valve, comprising:
> a water inlet;
> a first water outlet configured to supply water to a toilet tank;
> a bowl fill outlet port radially extending from a portion of a body of the toilet fill valve, the bowl fill outlet port being operatively coupled to the water inlet, and the bowl fill outlet port comprising an integrally molded portion of the body of the toilet fill valve;
> a bowl fill valve having a bowl fill valve inlet port and a bowl fill valve outlet port, wherein the bowl fill valve inlet port is compatible with the bowl fill outlet port and ***the bowl fill valve inlet port being coupled to the bowl fill outlet port and establishing direct contact between the bowl fill outlet port and the bowl fill valve inlet port***, wherein the bowl fill valve inlet port and the bowl fill valve outlet port each comprise an integrally molded portion of the bowl fill valve;
> the bowl fill valve being configured to supply an adjustable flow of water out the bowl fill valve outlet port for filling a toilet bowl during a flush cycle of a toilet; and
> the bowl fill valve being affixed to the bowl fill outlet port by an annular protrusion being snap-fit into an annular groove.

(*Emphasis added*). Applicants respectfully submit that the combination of the cited references fails to show or suggest at least the elements of independent claim 1 emphasized above.

In rejecting claim 1, page 3 of the Office Action alleges:

> DeMarco discloses a toilet fill valve (Fig. 1) comprising … a bowl fill outlet port-radially extending from a portion of a body of the toilet fill valve, the bowl fill outlet port being operatively coupled to the water inlet; a bowl fill valve (36) having a bowl fill valve inlet port and a bowl fill valve outlet port, wherein the bowl fill valve inlet port is compatible with the bowl fill outlet port and the bowl fill valve inlet port being coupled to the bowl fill outlet port

Applicants respectfully disagree. FIG. 1 of *DeMarco* is provided below:

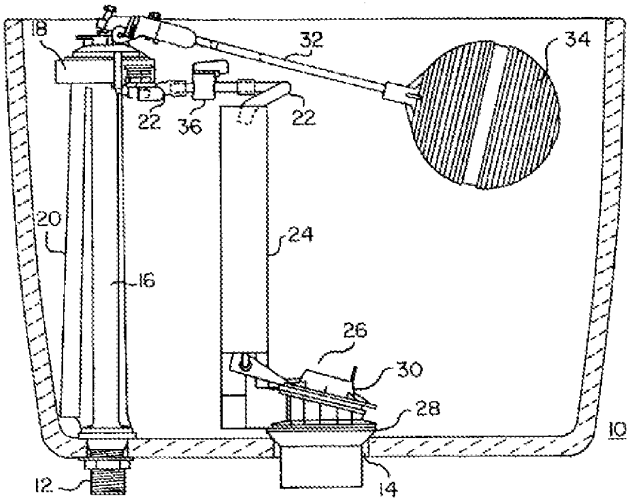

FIG. 1

It appears that the Office Action alleges that the reseal valve 36 in *DeMarco* is the same as "a bowl fill valve," as recited in claim 10. Although the Office Action does not explicitly identify the element it alleges as being "a bowl fill outlet port," Applicants believe the Office Action is alleging that the component of the water

control assembly 18 that connects to the reseal hose 22 is the same as "a bowl fill outlet port."

However, col. 3, lines 16-26, of *DeMarco* states:

> Water control assembly 18 is provided in the tank for refilling water closet tank 10 with fresh water after flushing has occurred. Water enters the tank through a water closet filling tube 20 which extends downwardly from water control assembly 18 with its open end spaced a short distance from the bottom of the tank. Some fresh water is also supplied to a reseal hose 22 during refilling of the tank. Reseal hose 22 directs water into an overflow tube 24 of a flush valve 26.

Col. 3, lines 54-57, of *DeMarco* further states:

> In accordance with the instant invention, a flow control or reseal valve 36 is interposed in reseal hose 22. Valve 36 fits easily into hose 22 by merely cutting the tube and inserting valve 36 into the resulting ends of hose 22.

Thus, it appears that the reseal valve 36 is inserted into the reseal hose 22, and the reseal hose 22 appears to be attached to the water control assembly 18. In other words, it appears that the reseal hose 22 connects the reseal valve 36 to the water control assembly 18.

However, claim 1 specifically recites "the bowl fill valve inlet port being coupled to the bowl fill outlet port and establishing ***direct contact*** between the bowl fill outlet port and the bowl fill valve inlet port" (*emphasis added*). In *DeMarco*, the reseal valve 36 and the water control assembly 18 do not appear to be in direct contact. Instead, it appears that the reseal hose 22 is used to connect the water control assembly 18 and the reseal valve 36. Thus, *DeMarco* fails to show or suggest "the bowl fill valve inlet port being coupled to the bowl fill

outlet port and establishing direct contact between the bowl fill outlet port and the bowl fill valve inlet port," as recited in claim 1.

Likewise, *Mueller* does not show or suggest "the bowl fill valve inlet port being coupled to the bowl fill outlet port and establishing direct contact between the bowl fill outlet port and the bowl fill valve inlet port," nor does the Office Action rely on *Mueller* as allegedly showing or suggesting this element. Instead, it appears that *Mueller* is directed towards "a fluid diverter valve (10) that allows quick connection/disconnection of a hand held sprayer used for cleaning shower stalls and bathroom" (*Mueller*, abstract). Thus, *Mueller* fails to show or suggest "the bowl fill valve inlet port being coupled to the bowl fill outlet port and establishing direct contact between the bowl fill outlet port and the bowl fill valve inlet port," as recited in claim 1.

Therefore, the combination of the cited references fails to show or suggest all of the elements of independent claim 1. For at least this reason, Applicants respectfully request that the rejection of claim 1 be withdrawn. In addition, Applicants request that the rejections of claim 2-9 be withdrawn as depending from claim 1.

B. Rejections of Claims 13-15 in View of *DeMarco* and *Mueller*

Applicants respectfully request that the rejections of claims 13-15 in view of *DeMarco* and *Mueller* be withdrawn as depending from claim 10 for the reasons set forth above. As discussed above, *DeMarco* fails to show or suggest "coupling a bowl fill valve inlet port of a bowl fill valve directly to the bowl fill outlet

port by engaging an annular groove with an annular protrusion, wherein the bowl fill valve inlet port is affixed to the bowl fill outlet port via the annular groove and the annular protrusion," as recited in claim 10.

Mueller does not show or suggest this element, nor does the Office Action rely on *Mueller* as showing or suggesting this element. Instead, it appears that *Mueller* is directed towards "a fluid diverter valve (10) that allows quick connection/disconnection of a hand held sprayer used for cleaning shower stalls and bathroom" (*Mueller*, abstract). Thus, *Mueller* fails to show or suggest "coupling a bowl fill valve inlet port of a bowl fill valve directly to the bowl fill outlet port by engaging an annular groove with an annular protrusion, wherein the bowl fill valve inlet port is affixed to the bowl fill outlet port via the annular groove and the annular protrusion," as recited in claim 10.

Therefore, the combination of the cited references fails to show or suggest all of the elements of claim 10, from which claims 13-15 depend. For at least this reason, Applicants respectfully request that the rejections of claims 13-15 in view of *DeMarco* and *Mueller* be withdrawn.

C. Rejections of Claims 13-15 in View of *Stemples* and *Mueller*

Applicants respectfully request that the rejections of claims 13-15 in view of *Stempels* and *Mueller* be withdrawn as depending from claim 10 for the reasons set forth above. As discussed above, *DeMarco* fails to show or suggest "coupling a bowl fill valve inlet port of a bowl fill valve directly to the bowl fill outlet port by engaging an annular groove with an annular protrusion, wherein the bowl

fill valve inlet port is affixed to the bowl fill outlet port via the annular groove and the annular protrusion," as recited in claim 10.

Mueller does not show or suggest this element, nor does the Office Action rely on *Mueller* as showing or suggesting this element. Instead, it appears that *Mueller* is directed towards "a fluid diverter valve (10) that allows quick connection/disconnection of a hand held sprayer used for cleaning shower stalls and bathroom" (*Mueller*, abstract). Thus, *Mueller* fails to show or suggest "coupling a bowl fill valve inlet port of a bowl fill valve directly to the bowl fill outlet port by engaging an annular groove with an annular protrusion, wherein the bowl fill valve inlet port is affixed to the bowl fill outlet port via the annular groove and the annular protrusion," as recited in claim 10.

Therefore, the combination of the cited references fails to show or suggest all of the elements of claim 10, from which claims 13-15 depend. For at least this reason, Applicants respectfully request that the rejections of claims 13-15 in view of *Stemples* and *Mueller* be withdrawn.

CONCLUSION

It is requested that all outstanding objections and rejections be withdrawn and that this application and all presently pending claims be allowed to issue. If the Examiner has any questions or comments regarding this Response, the Examiner is encouraged to telephone the undersigned counsel of Applicants.

Respectfully submitted,

/RDG/

_____

Robert D. Gravois
Registration Number: 67,224

THOMAS, KAYDEN, HORSTEMEYER & RISLEY, L.L.P.
Customer Number 24504
(770) 933-9500

Electronic Acknowledgement Receipt

EFS ID:	13936487
Application Number:	13346355
International Application Number:	
Confirmation Number:	7392
Title of Invention:	Toilet Fill Valve with Adjustable Bowl Fill Flow
First Named Inventor/Applicant Name:	Michael J. Schuster
Customer Number:	24504
Filer:	Robert D. Gravois/mary meegan
Filer Authorized By:	Robert D. Gravois
Attorney Docket Number:	171901-1033
Receipt Date:	09-OCT-2012
Filing Date:	09-JAN-2012
Time Stamp:	11:26:11
Application Type:	Utility under 35 USC 111(a)

Payment information:

Submitted with Payment	no

File Listing:

Document Number	Document Description	File Name	File Size(Bytes)/ Message Digest	Multi Part /.zip	Pages (if appl.)
1	Amendment/Req. Reconsideration-After Non-Final Reject	01729877.PDF	225137 90cc898faee72353711c0b157e49c4fbd4ac033b	no	22

Warnings:

Information:

Total Files Size (in bytes):	225137

This Acknowledgement Receipt evidences receipt on the noted date by the USPTO of the indicated documents, characterized by the applicant, and including page counts, where applicable. It serves as evidence of receipt similar to a Post Card, as described in MPEP 503.

New Applications Under 35 U.S.C. 111
If a new application is being filed and the application includes the necessary components for a filing date (see 37 CFR 1.53(b)-(d) and MPEP 506), a Filing Receipt (37 CFR 1.54) will be issued in due course and the date shown on this Acknowledgement Receipt will establish the filing date of the application.

National Stage of an International Application under 35 U.S.C. 371
If a timely submission to enter the national stage of an international application is compliant with the conditions of 35 U.S.C. 371 and other applicable requirements a Form PCT/DO/EO/903 indicating acceptance of the application as a national stage submission under 35 U.S.C. 371 will be issued in addition to the Filing Receipt, in due course.

New International Application Filed with the USPTO as a Receiving Office
If a new international application is being filed and the international application includes the necessary components for an international filing date (see PCT Article 11 and MPEP 1810), a Notification of the International Application Number and of the International Filing Date (Form PCT/RO/105) will be issued in due course, subject to prescriptions concerning national security, and the date shown on this Acknowledgement Receipt will establish the international filing date of the application.

PTO/SB/06 (07-06)
Approved for use through 1/31/2007. OMB 0651-0032
U.S. Patent and Trademark Office; U.S. DEPARTMENT OF COMMERCE
Under the Paperwork Reduction Act of 1995, no persons are required to respond to a collection of information unless it displays a valid OMB control number.

PATENT APPLICATION FEE DETERMINATION RECORD Substitute for Form PTO-875	Application or Docket Number 13/346,355	Filing Date 01/09/2012	☐ To be Mailed

APPLICATION AS FILED – PART I

FOR	(Column 1) NUMBER FILED	(Column 2) NUMBER EXTRA	SMALL ENTITY ☒ RATE ($)	FEE ($)	OR	OTHER THAN SMALL ENTITY RATE ($)	FEE ($)
☐ BASIC FEE (37 CFR 1.16(a), (b), or (c))	N/A	N/A	N/A			N/A	
☐ SEARCH FEE (37 CFR 1.16(k), (i), or (m))	N/A	N/A	N/A			N/A	
☐ EXAMINATION FEE (37 CFR 1.16(o), (p), or (q))	N/A	N/A	N/A			N/A	
TOTAL CLAIMS (37 CFR 1.16(i))	minus 20 =	*	X $ =		OR	X $ =	
INDEPENDENT CLAIMS (37 CFR 1.16(h))	minus 3 =	*	X $ =			X $ =	
☐ APPLICATION SIZE FEE (37 CFR 1.16(s))	If the specification and drawings exceed 100 sheets of paper, the application size fee due is $250 ($125 for small entity) for each additional 50 sheets or fraction thereof. See 35 U.S.C. 41(a)(1)(G) and 37 CFR 1.16(s).						
☐ MULTIPLE DEPENDENT CLAIM PRESENT (37 CFR 1.16(j))							
* If the difference in column 1 is less than zero, enter "0" in column 2.			TOTAL			TOTAL	

APPLICATION AS AMENDED – PART II

AMENDMENT 10/09/2012	(Column 1) CLAIMS REMAINING AFTER AMENDMENT		(Column 2) HIGHEST NUMBER PREVIOUSLY PAID FOR	(Column 3) PRESENT EXTRA	SMALL ENTITY RATE ($)	ADDITIONAL FEE ($)	OR	OTHER THAN SMALL ENTITY RATE ($)	ADDITIONAL FEE ($)
Total (37 CFR 1.16(i))	* 15	Minus	** 20	= 0	X $31 =	0	OR	X $ =	
Independent (37 CFR 1.16(h))	* 2	Minus	***3	= 0	X $125 =	0	OR	X $ =	
☐ Application Size Fee (37 CFR 1.16(s))									
☐ FIRST PRESENTATION OF MULTIPLE DEPENDENT CLAIM (37 CFR 1.16(j))							OR		
					TOTAL ADD'L FEE	0	OR	TOTAL ADD'L FEE	

AMENDMENT	(Column 1) CLAIMS REMAINING AFTER AMENDMENT		(Column 2) HIGHEST NUMBER PREVIOUSLY PAID FOR	(Column 3) PRESENT EXTRA	RATE ($)	ADDITIONAL FEE ($)	OR	RATE ($)	ADDITIONAL FEE ($)
Total (37 CFR 1.16(i))	*	Minus	**	=	X $ =		OR	X $ =	
Independent (37 CFR 1.16(h))	*	Minus	***	=	X $ =		OR	X $ =	
☐ Application Size Fee (37 CFR 1.16(s))									
☐ FIRST PRESENTATION OF MULTIPLE DEPENDENT CLAIM (37 CFR 1.16(j))							OR		
					TOTAL ADD'L FEE		OR	TOTAL ADD'L FEE	

* If the entry in column 1 is less than the entry in column 2, write "0" in column 3.
** If the "Highest Number Previously Paid For" IN THIS SPACE is less than 20, enter "20".
*** If the "Highest Number Previously Paid For" IN THIS SPACE is less than 3, enter "3".
The "Highest Number Previously Paid For" (Total or Independent) is the highest number found in the appropriate box in column 1.

Legal Instrument Examiner:
/TAMARA DARKO/

This collection of information is required by 37 CFR 1.16. The information is required to obtain or retain a benefit by the public which is to file (and by the USPTO to process) an application. Confidentiality is governed by 35 U.S.C. 122 and 37 CFR 1.14. This collection is estimated to take 12 minutes to complete, including gathering, preparing, and submitting the completed application form to the USPTO. Time will vary depending upon the individual case. Any comments on the amount of time you require to complete this form and/or suggestions for reducing this burden, should be sent to the Chief Information Officer, U.S. Patent and Trademark Office, U.S. Department of Commerce, P.O. Box 1450, Alexandria, VA 22313-1450. DO NOT SEND FEES OR COMPLETED FORMS TO THIS ADDRESS. **SEND TO: Commissioner for Patents, P.O. Box 1450, Alexandria, VA 22313-1450.**
If you need assistance in completing the form, call 1-800-PTO-9199 and select option 2.

UNITED STATES PATENT AND TRADEMARK OFFICE

UNITED STATES DEPARTMENT OF COMMERCE
United States Patent and Trademark Office
Address: COMMISSIONER FOR PATENTS
P.O. Box 1450
Alexandria, Virginia 22313-1450
www.uspto.gov

APPLICATION NO.	FILING DATE	FIRST NAMED INVENTOR	ATTORNEY DOCKET NO.	CONFIRMATION NO.
13/346,355	01/09/2012	Michael J. Schuster	171901-1033	7392

24504 7590 07/12/2012
THOMAS, KAYDEN, HORSTEMEYER & RISLEY, LLP
400 INTERSTATE NORTH PARKWAY SE
SUITE 1500
ATLANTA, GA 30339

EXAMINER
NGUYEN, TUAN N

ART UNIT	PAPER NUMBER
3751	

NOTIFICATION DATE	DELIVERY MODE
07/12/2012	ELECTRONIC

Please find below and/or attached an Office communication concerning this application or proceeding.

The time period for reply, if any, is set in the attached communication.

Notice of the Office communication was sent electronically on above-indicated "Notification Date" to the following e-mail address(es):

uspatents@tkhr.com
kristen.layton@tkhr.com
ozzie.liggins@tkhr.com

PTOL-90A (Rev. 04/07)

Office Action Summary	Application No.	Applicant(s)	
	13/346,355	SCHUSTER ET AL.	
	Examiner	Art Unit	
	TUAN N. NGUYEN	3751	

-- The MAILING DATE of this communication appears on the cover sheet with the correspondence address --

Period for Reply

A SHORTENED STATUTORY PERIOD FOR REPLY IS SET TO EXPIRE 3 MONTH(S) OR THIRTY (30) DAYS, WHICHEVER IS LONGER, FROM THE MAILING DATE OF THIS COMMUNICATION.

- Extensions of time may be available under the provisions of 37 CFR 1.136(a). In no event, however, may a reply be timely filed after SIX (6) MONTHS from the mailing date of this communication.
- If NO period for reply is specified above, the maximum statutory period will apply and will expire SIX (6) MONTHS from the mailing date of this communication.
- Failure to reply within the set or extended period for reply will, by statute, cause the application to become ABANDONED (35 U.S.C. § 133). Any reply received by the Office later than three months after the mailing date of this communication, even if timely filed, may reduce any earned patent term adjustment. See 37 CFR 1.704(b).

Status

1)☒ Responsive to communication(s) filed on *09 January 2012*.

2a)☐ This action is **FINAL**. 2b)☒ This action is non-final.

3)☐ Since this application is in condition for allowance except for formal matters, prosecution as to the merits is closed in accordance with the practice under *Ex parte Quayle*, 1935 C.D. 11, 453 O.G. 213.

Disposition of Claims

4)☒ Claim(s) *1-15* is/are pending in the application.

4a) Of the above claim(s) _____ is/are withdrawn from consideration.

5)☐ Claim(s) _____ is/are allowed.

6)☒ Claim(s) *1-15* is/are rejected.

7)☐ Claim(s) _____ is/are objected to.

8)☐ Claim(s) _____ are subject to restriction and/or election requirement.

Application Papers

9)☐ The specification is objected to by the Examiner.

10)☐ The drawing(s) filed on _____ is/are: a)☐ accepted or b)☐ objected to by the Examiner.

Applicant may not request that any objection to the drawing(s) be held in abeyance. See 37 CFR 1.85(a).

Replacement drawing sheet(s) including the correction is required if the drawing(s) is objected to. See 37 CFR 1.121(d).

11)☐ The oath or declaration is objected to by the Examiner. Note the attached Office Action or form PTO-152.

Priority under 35 U.S.C. § 119

12)☐ Acknowledgment is made of a claim for foreign priority under 35 U.S.C. § 119(a)-(d) or (f).

a)☐ All b)☐ Some * c)☐ None of:

1.☐ Certified copies of the priority documents have been received.

2.☐ Certified copies of the priority documents have been received in Application No. _____.

3.☐ Copies of the certified copies of the priority documents have been received in this National Stage application from the International Bureau (PCT Rule 17.2(a)).

* See the attached detailed Office action for a list of the certified copies not received.

Attachment(s)

1) ☐ Notice of References Cited (PTO-892)

2) ☐ Notice of Draftsperson's Patent Drawing Review (PTO-948)

3) ☒ Information Disclosure Statement(s) (PTO/SB/08) Paper No(s)/Mail Date *4/25/12*.

4) ☐ Interview Summary (PTO-413) Paper No(s)/Mail Date. _____ .

5) ☐ Notice of Informal Patent Application

6) ☐ Other: _____.

Fluidmaster, Inc. - EX1009, Page 123
IPR2024-00633 (Fluidmaster Inc v. Danco Inc)

DETAILED ACTION

Claim Rejections - 35 USC § 102

The following is a quotation of the appropriate paragraphs of 35 U.S.C. 102 that form the basis for the rejections under this section made in this Office action:

> A person shall be entitled to a patent unless –
>
> (b) the invention was patented or described in a printed publication in this or a foreign country or in public use or on sale in this country, more than one year prior to the date of application for patent in the United States.

Claims 10-12 are rejected under 35 U.S.C. 102(b) as being anticipated by US 4,980,932 (hereinafter Stemples).

Stemples discloses an adjustable bowl fill water with a bowl fill outlet port (AT) being coupling to a bowl fill valve (see Fig. 2) with a bowl fill valve inlet port engaging the outlet port by annular groove and annular protrusion (about 11c, see Fig. 2). The method as claimed would be inherent during the normal assembly and use of the Stemples device.

Claims 10-12 are rejected under 35 U.S.C. 102(b) as being anticipated US 5,708,991 (hereinafter DeMarco).

DeMarco discloses an adjustable bowl fill water with a bowl fill outlet port (defined by 22) being coupling to a bowl fill valve (36) with a bowl fill valve inlet port (44) engaging the outlet port by annular groove (in hose 22 cause by 44) and annular protrusion (see Fig. 2 at 44). The method as claimed would be inherent during the normal assembly and use of the DeMarco device.

Claim Rejections - 35 USC § 103

1. The following is a quotation of 35 U.S.C. 103(a) which forms the basis for all obviousness rejections set forth in this Office action:

> (a) A patent may not be obtained though the invention is not identically disclosed or described as set forth in section 102 of this title, if the differences between the subject matter sought to be patented and the prior art are such that the subject matter as a whole would have been obvious at the time the invention was made to a person having ordinary skill in the art to which said subject matter pertains. Patentability shall not be negatived by the manner in which the invention was made.

Claims 1-9 and 13-15 are rejected under 35 U.S.C. 103(a) as being unpatentable over US 5,708,991 (hereinafter DeMarco) in view of US 5,624,073 (hereinafter Mueller).

DeMarco discloses a toilet fill valve (Fig. 1) comprising a water inlet; a first water outlet configured to supply water to a toilet tank; a bowl fill outlet port-radially extending from a portion of a body of the toilet fill valve, the bowl fill outlet port being operatively coupled to the water inlet; a bowl fill valve (36) having a bowl fill valve inlet port and a bowl fill valve outlet port, wherein the bowl fill valve inlet port is compatible with the bowl fill outlet port and the bowl fill valve inlet port being coupled to the bowl fill outlet port; a tube (tube 22 on the right) having a first end attached to the bowl fill valve outlet port and a second end directed into an overflow tube in the toilet tank, wherein a flow of water into the overflow tube is directed to a toilet bowl of the toilet; and the bowl fill valve being configured to supply an adjustable flow of water out the bowl fill outlet port for filling a toilet bowl during a flush cycle of a toilet. The bowl fill valve extends beyond the bowl fill outlet port in a radial direction with respect to a portion of the body of the toilet fill valve. The bowl fill outlet port further comprises a female receptacle (the right side of the left member 22 of Fig. 1); and the bowl fill valve inlet port (about 44) further comprises a male end compatible with the female receptacle. The bowl fill valve inlet

port further comprises a female receptacle (the left side of the left member 22 of Fig. 1); and the bowl fill outlet port further comprises a male end (see Fig. 1) compatible with the female receptacle. The toilet fill valve further comprises a float (34); an actuating arm (32) coupled to the float, the actuating arm radially extending in an orthogonal direction relative to a longitudinal axis of the toilet fill valve; and the bowl fill valve extending in an orthogonal direction relative to the longitudinal axis of the toilet fill valve, wherein the actuating arm is angularly offset relative to the bowl fill valve, thereby preventing an interference with the bowl fill valve and a translational stern extending from the float to a free end of the actuating arm. The bowl fill valve outlet port further comprises a nipple (about 46) adapted to mate with an end of a tube (22). The bowl fill valve further comprises a number of biased positions that is rotatable to select different flow rate output. The DeMarco reference teaches all of the limitations with annular groove (in hose 22 cause by 44) and annular protrusion (see Fig. 2 at 44) as discussed above except the rib and groove as claimed. However, such a rib and groove coupling is taught by Mueller (see Fig. 3). Therefore, it would have been obvious to one of ordinary skill in the art at the time the invention was made to modify the connection coupling type of DeMarco in view of the teaching of Mueller. The method as claimed would be inherent during normal assembly and use of the DeMarco in view of Mueller device.

Claims 13-15 are rejected under 35 U.S.C. 103(a) as being unpatentable over Stemples in view of Mueller.

Stemples teaches all of the claimed limitations as discussed above except for the rib and groove as claimed. However, such a rib and groove coupling is taught by Mueller (see Fig. 3). Therefore, it would have been obvious to one of ordinary skill in the art at the time the invention was made to modify the connection coupling type of Stemples in view of the teaching of Mueller. The method as claimed would be inherent during normal assembly and use of the Stemples in view of Mueller device.

Conclusion

2. Any inquiry concerning this communication or earlier communications from the examiner should be directed to TUAN N. NGUYEN whose telephone number is (571)272-4892. The examiner can normally be reached on Monday to Friday between 10am-6pm.

If attempts to reach the examiner by telephone are unsuccessful, the examiner's supervisor, Greg Huson can be reached on (571)272-4887. The fax phone number for the organization where this application or proceeding is assigned is 571-273-8300.

Information regarding the status of an application may be obtained from the Patent Application Information Retrieval (PAIR) system. Status information for published applications may be obtained from either Private PAIR or Public PAIR. Status information for unpublished applications is available through Private PAIR only. For more information about the PAIR system, see http://pair-direct.uspto.gov. Should you have questions on access to the Private PAIR system, contact the Electronic Business Center (EBC) at 866-217-9197 (toll-free). If you would like assistance from a USPTO Customer Service Representative or access to the automated information system, call 800-786-9199 (IN USA OR CANADA) or 571-272-1000.

/Tuan N Nguyen/
Primary Examiner, Art Unit 3751

TN

INFORMATION DISCLOSURE STATEMENT BY APPLICANT (Not for submission under 37 CFR 1.99)		
	Application Number	13346355
	Filing Date	2012-01-09
	First Named Inventor	Michael J. Schuster et al.
	Art Unit	3751
	Examiner Name	tba
	Attorney Docket Number	171901-1033

U.S.PATENTS						
Examiner Initial*	Cite No	Patent Number	Kind Code[1]	Issue Date	Name of Patentee or Applicant of cited Document	Pages,Columns,Lines where Relevant Passages or Relevant Figures Appear
	1	1787601		1931-01-06	Swanberg	
	2	2087503		1937-07-20	Clemmons	
	3	2512176		1950-06-20	Shaffer	
	4	2791235		1957-05-07	Smith	
	5	3040769		1962-06-26	Lamb	
	6	3086546		1963-04-23	Brown	
	7	3172128		1965-03-09	Ducey	
	8	3457947		1969-07-29	Fitzgerald	

ALL REFERENCES CONSIDERED EXCEPT WHERE LINED THROUGH. /T.N./

Receipt date: 04/25/2012	Application Number	13346355	13346355 - GAU: 3751
INFORMATION DISCLOSURE STATEMENT BY APPLICANT (**Not for submission under 37 CFR 1.99**)	Filing Date	2012-01-09	
	First Named Inventor	Michael J. Schuster et al.	
	Art Unit	3751	
	Examiner Name	tba	
	Attorney Docket Number	171901-1033	

	9	3744064		1973-07-10	Preston	
	10	4351071		1982-09-28	Clar	
	11	4700413		1987-10-20	Lopez	
	12	4770388		1988-09-13	Carman	
	13	5083323		1992-01-28	Cannan	
	14	5228152		1993-07-20	Fraley	
	15	5232011		1993-08-03	Royalty	
	16	5327931		1994-07-12	Royalty	
	17	5442820		1995-08-22	Becker	
	18	5542448		1996-08-06	Campbell et al.	
	19	5742951		1998-04-28	Wright et al.	

ALL REFERENCES CONSIDERED EXCEPT WHERE LINED THROUGH. /T.N./

Receipt date: 04/25/2012	Application Number	13346355	13346355 - GAU: 3751
INFORMATION DISCLOSURE STATEMENT BY APPLICANT (**Not for submission under 37 CFR 1.99**)	Filing Date	2012-01-09	
	First Named Inventor	Michael J. Schuster et al.	
	Art Unit	3751	
	Examiner Name	tba	
	Attorney Docket Number	171901-1033	

	20	5775366		1998-07-07	Ray	
	21	6219856	B1	2001-04-24	Alles	
	22	6385788	B1	2002-05-14	Wasielewski	
	23	0136128		1873-02-25	Bralley	
	24	0994746		1911-06-13	Dwyer et al.	
	25	0996743		1911-07-04	Yancey	
	26	1113057		1914-10-06	Schumann	
	27	2465866		1949-03-29	Gaines	
	28	2736037		1956-02-28	Hardie	
	29	2799865		1957-07-23	Schuster	
	30	3321972		1967-05-30	Goldtrap	

ALL REFERENCES CONSIDERED EXCEPT WHERE LINED THROUGH. /T.N./

Receipt date: 04/25/2012	Application Number	13346355	13346355 - GAU: 3751
INFORMATION DISCLOSURE STATEMENT BY APPLICANT (**Not for submission under 37 CFR 1.99**)	Filing Date	2012-01-09	
	First Named Inventor	Michael J. Schuster et al.	
	Art Unit	3751	
	Examiner Name	tba	
	Attorney Docket Number	171901-1033	

	31	3762395		1973-10-02	Taylor	
	32	4134164		1979-01-16	Sanmartin Rial	
	33	4505231		1985-03-19	Syler	
	34	4527295		1985-07-09	Lacore	
	35	4898124		1990-02-06	Granberg et al.	
	36	5794279		1998-08-18	Schwartz	
	37	5862537		1999-01-26	Osmond	
	38	6295660		2001-10-02	Schuster	
	39	3986216		1976-10-19	Davis et al.	
	40	3994628		1976-11-30	Kemper	
	41	4007498		1977-02-15	Pearson	

ALL REFERENCES CONSIDERED EXCEPT WHERE LINED THROUGH. /T.N./

Receipt date: 04/25/2012	Application Number	13346355	13346355 - GAU: 3751
INFORMATION DISCLOSURE STATEMENT BY APPLICANT (**Not for submission under 37 CFR 1.99**)	Filing Date	2012-01-09	
	First Named Inventor	Michael J. Schuster et al.	
	Art Unit	3751	
	Examiner Name	tba	
	Attorney Docket Number	171901-1033	

	42	4017916		1977-04-19	Pearson	
	43	4032822		1977-06-28	Un	
	44	4090532		1978-05-23	Story, Jr.	
	45	4145775		1979-03-27	Butler	
	46	4392260		1983-07-12	Bensen	
	47	4707867		1987-11-24	Kawabe et al.	
	48	4764996		1988-08-23	Pino	
	49	4793588		1988-12-27	Laverty, Jr.	
	50	4918764		1990-04-24	Haselswerdt et al.	
	51	4980932		1991-01-01	Stemples	
	52	5007452		1991-04-16	Antunez	

ALL REFERENCES CONSIDERED EXCEPT WHERE LINED THROUGH. /T.N./

Receipt date: 04/25/2012	Application Number	13346355	13346355 - GAU: 3751
INFORMATION DISCLOSURE STATEMENT BY APPLICANT (**Not for submission under 37 CFR 1.99**)	Filing Date	2012-01-09	
	First Named Inventor	Michael J. Schuster et al.	
	Art Unit	3751	
	Examiner Name	tba	
	Attorney Docket Number	171901-1033	

	53	5036553		1991-08-06	Sanderson	
	54	5052060		1991-10-01	Makita et al.	
	55	5134729		1992-08-04	Shaw	
	56	5245710		1993-09-21	Haselswerdt et al.	
	57	5362026		1994-11-08	Kobayashi et al.	
	58	5432959		1995-07-18	Ellsworth et al.	
	59	5469586		1995-11-28	Tsutsui et al.	
	60	5708991		1998-01-20	DeMarco	
	61	5715860		1998-02-10	Horad	
	62	6202227	B1	2001-03-20	Gurowitz	
	63	6209576	B1	2001-04-03	Davis	

ALL REFERENCES CONSIDERED EXCEPT WHERE LINED THROUGH. /T.N./

Receipt date: 04/25/2012	Application Number	13346355	13346355 - GAU: 3751
INFORMATION DISCLOSURE STATEMENT BY APPLICANT (**Not for submission under 37 CFR 1.99**)	Filing Date	2012-01-09	
	First Named Inventor	Michael J. Schuster et al.	
	Art Unit	3751	
	Examiner Name	tba	
	Attorney Docket Number	171901-1033	

	64	6263519	B1	2001-07-24	Parsons et al.	
	65	6560790	B2	2003-05-13	Saar et al.	
	66	4420845		1983-12-20	Antunez	
	67	6823889		2004-11-30	Schuster	
	68	6409221	B1	2002-06-25	Robinson et al.	
	69	5926868	A	1999-07-27	Bjerke, Thomas E.	
	70	5624073		1997-04-29	Mueller et al.	

If you wish to add additional U.S. Patent citation information please click the Add button.

U.S.PATENT APPLICATION PUBLICATIONS

Examiner Initial*	Cite No	Publication Number	Kind Code[1]	Publication Date	Name of Patentee or Applicant of cited Document	Pages,Columns,Lines where Relevant Passages or Relevant Figures Appear
	1	20020092090	A1	2002-07-18	Johnson	
	2	20020162166	A1	2002-11-07	Saar et al.	

If you wish to add additional U.S. Published Application citation information please click the Add button.

EFS Web 2.1.17 ALL REFERENCES CONSIDERED EXCEPT WHERE LINED THROUGH. /T.N./

Receipt date: 04/25/2012	Application Number	13346355	13346355 - GAU: 3751
INFORMATION DISCLOSURE STATEMENT BY APPLICANT (**Not for submission under 37 CFR 1.99**)	Filing Date	2012-01-09	
	First Named Inventor	Michael J. Schuster et al.	
	Art Unit	3751	
	Examiner Name	tba	
	Attorney Docket Number	171901-1033	

FOREIGN PATENT DOCUMENTS

Examiner Initial*	Cite No	Foreign Document Number[3]	Country Code[2] i	Kind Code[4]	Publication Date	Name of Patentee or Applicant of cited Document	Pages,Columns,Lines where Relevant Passages or Relevant Figures Appear	T[5]
	1							☐

If you wish to add additional Foreign Patent Document citation information please click the Add button

NON-PATENT LITERATURE DOCUMENTS

Examiner Initials*	Cite No	Include name of the author (in CAPITAL LETTERS), title of the article (when appropriate), title of the item (book, magazine, journal, serial, symposium, catalog, etc), date, pages(s), volume-issue number(s), publisher, city and/or country where published.	T[5]
	1	US Patent 6,823,889, File History, 2004-2005 (Great-Grandparent Patent to this Application) (copy not attached).	☐
	2	US Patent 7,743,436, File History, 2004-2010 (Grandparent Patent to this Application) (copy not attached).	☐
	3	US Patent 8,104,105, File History, (2010-1212) (Parent to this Application) (copy not attached).	☐

If you wish to add additional non-patent literature document citation information please click the Add button

EXAMINER SIGNATURE

Examiner Signature	/Tuan Nguyen/	Date Considered	07/02/2012

*EXAMINER: Initial if reference considered, whether or not citation is in conformance with MPEP 609. Draw line through a citation if not in conformance and not considered. Include copy of this form with next communication to applicant.

[1] See Kind Codes of USPTO Patent Documents at www.USPTO.GOV or MPEP 901.04. [2] Enter office that issued the document, by the two-letter code (WIPO Standard ST.3). [3] For Japanese patent documents, the indication of the year of the reign of the Emperor must precede the serial number of the patent document. [4] Kind of document by the appropriate symbols as indicated on the document under WIPO Standard ST.16 if possible. [5] Applicant is to place a check mark here if English language translation is attached.

EFS Web 2.1.17

ALL REFERENCES CONSIDERED EXCEPT WHERE LINED THROUGH. /T.N./

Receipt date: 04/25/2012	Application Number	13346355	13346355 - GAU: 3751
INFORMATION DISCLOSURE STATEMENT BY APPLICANT (**Not for submission under 37 CFR 1.99**)	Filing Date	2012-01-09	
	First Named Inventor	Michael J. Schuster et al.	
	Art Unit	3751	
	Examiner Name	tba	
	Attorney Docket Number	171901-1033	

CERTIFICATION STATEMENT

Please see 37 CFR 1.97 and 1.98 to make the appropriate selection(s):

☐ That each item of information contained in the information disclosure statement was first cited in any communication from a foreign patent office in a counterpart foreign application not more than three months prior to the filing of the information disclosure statement. See 37 CFR 1.97(e)(1).

OR

☐ That no item of information contained in the information disclosure statement was cited in a communication from a foreign patent office in a counterpart foreign application, and, to the knowledge of the person signing the certification after making reasonable inquiry, no item of information contained in the information disclosure statement was known to any individual designated in 37 CFR 1.56(c) more than three months prior to the filing of the information disclosure statement. See 37 CFR 1.97(e)(2).

☐ See attached certification statement.

☐ Fee set forth in 37 CFR 1.17 (p) has been submitted herewith.

☒ None

SIGNATURE

A signature of the applicant or representative is required in accordance with CFR 1.33, 10.18. Please see CFR 1.4(d) for the form of the signature.

Signature	/RDG/	Date (YYYY-MM-DD)	2012-04-25
Name/Print	Robert D. Gravois	Registration Number	67244

This collection of information is required by 37 CFR 1.97 and 1.98. The information is required to obtain or retain a benefit by the public which is to file (and by the USPTO to process) an application. Confidentiality is governed by 35 U.S.C. 122 and 37 CFR 1.14. This collection is estimated to take 1 hour to complete, including gathering, preparing and submitting the completed application form to the USPTO. Time will vary depending upon the individual case. Any comments on the amount of time you require to complete this form and/or suggestions for reducing this burden, should be sent to the Chief Information Officer, U.S. Patent and Trademark Office, U.S. Department of Commerce, P.O. Box 1450, Alexandria, VA 22313-1450. DO NOT SEND FEES OR COMPLETED FORMS TO THIS ADDRESS. **SEND TO: Commissioner for Patents, P.O. Box 1450, Alexandria, VA 22313-1450.**

ALL REFERENCES CONSIDERED EXCEPT WHERE LINED THROUGH. /T.N./

Privacy Act Statement

The Privacy Act of 1974 (P.L. 93-579) requires that you be given certain information in connection with your submission of the attached form related to a patent application or patent. Accordingly, pursuant to the requirements of the Act, please be advised that: (1) the general authority for the collection of this information is 35 U.S.C. 2(b)(2); (2) furnishing of the information solicited is voluntary; and (3) the principal purpose for which the information is used by the U.S. Patent and Trademark Office is to process and/or examine your submission related to a patent application or patent. If you do not furnish the requested information, the U.S. Patent and Trademark Office may not be able to process and/or examine your submission, which may result in termination of proceedings or abandonment of the application or expiration of the patent.

The information provided by you in this form will be subject to the following routine uses:

1. The information on this form will be treated confidentially to the extent allowed under the Freedom of Information Act (5 U.S.C. 552) and the Privacy Act (5 U.S.C. 552a). Records from this system of records may be disclosed to the Department of Justice to determine whether the Freedom of Information Act requires disclosure of these record s.

2. A record from this system of records may be disclosed, as a routine use, in the course of presenting evidence to a court, magistrate, or administrative tribunal, including disclosures to opposing counsel in the course of settlement negotiations.

3. A record in this system of records may be disclosed, as a routine use, to a Member of Congress submitting a request involving an individual, to whom the record pertains, when the individual has requested assistance from the Member with respect to the subject matter of the record.

4. A record in this system of records may be disclosed, as a routine use, to a contractor of the Agency having need for the information in order to perform a contract. Recipients of information shall be required to comply with the requirements of the Privacy Act of 1974, as amended, pursuant to 5 U.S.C. 552a(m).

5. A record related to an International Application filed under the Patent Cooperation Treaty in this system of records may be disclosed, as a routine use, to the International Bureau of the World Intellectual Property Organization, pursuant to the Patent Cooperation Treaty.

6. A record in this system of records may be disclosed, as a routine use, to another federal agency for purposes of National Security review (35 U.S.C. 181) and for review pursuant to the Atomic Energy Act (42 U.S.C. 218(c)).

7. A record from this system of records may be disclosed, as a routine use, to the Administrator, General Services, or his/her designee, during an inspection of records conducted by GSA as part of that agency's responsibility to recommend improvements in records management practices and programs, under authority of 44 U.S.C. 2904 and 2906. Such disclosure shall be made in accordance with the GSA regulations governing inspection of records for this purpose, and any other relevant (i.e., GSA or Commerce) directive. Such disclosure shall not be used to make determinations about individuals.

8. A record from this system of records may be disclosed, as a routine use, to the public after either publication of the application pursuant to 35 U.S.C. 122(b) or issuance of a patent pursuant to 35 U.S.C. 151. Further, a record may be disclosed, subject to the limitations of 37 CFR 1.14, as a routine use, to the public if the record was filed in an application which became abandoned or in which the proceedings were terminated and which application is referenced by either a published application, an application open to public inspections or an issued patent.

9. A record from this system of records may be disclosed, as a routine use, to a Federal, State, or local law enforcement agency, if the USPTO becomes aware of a violation or potential violation of law or regulation.

ALL REFERENCES CONSIDERED EXCEPT WHERE LINED THROUGH. /T.N./

Search Notes	Application/Control No.	Applicant(s)/Patent under Reexamination	
	13/346,355	SCHUSTER ET AL.	
	Examiner	Art Unit	
	TUAN N. NGUYEN	3751	

SEARCHED			
Class	Subclass	Date	Examiner
4	331 324 366 415 675	7/2/2012	TN
285	91		
137	15.26		
	432 434		
	436 437		
	441-444	7/2/2012	TN

INTERFERENCE SEARCHED			
Class	Subclass	Date	Examiner

SEARCH NOTES (INCLUDING SEARCH STRATEGY)		
	DATE	EXMR
REVIEW PARENT CASES	7/2/2012	TN

PTO/SB/08a (01-10)
Approved for use through 07/31/2012. OMB 0651-0031
U.S. Patent and Trademark Office; U.S. DEPARTMENT OF COMMERCE

Under the Paperwork Reduction Act of 1995, no persons are required to respond to a collection of information unless it contains a valid OMB control number.

INFORMATION DISCLOSURE STATEMENT BY APPLICANT (Not for submission under 37 CFR 1.99)		
	Application Number	13346355
	Filing Date	2012-01-09
	First Named Inventor	Michael J. Schuster et al.
	Art Unit	3751
	Examiner Name	tba
	Attorney Docket Number	171901-1033

U.S.PATENTS						
Examiner Initial*	Cite No	Patent Number	Kind Code[1]	Issue Date	Name of Patentee or Applicant of cited Document	Pages,Columns,Lines where Relevant Passages or Relevant Figures Appear
	1	1787601		1931-01-06	Swanberg	
	2	2087503		1937-07-20	Clemmons	
	3	2512176		1950-06-20	Shaffer	
	4	2791235		1957-05-07	Smith	
	5	3040769		1962-06-26	Lamb	
	6	3086546		1963-04-23	Brown	
	7	3172128		1965-03-09	Ducey	
	8	3457947		1969-07-29	Fitzgerald	

INFORMATION DISCLOSURE STATEMENT BY APPLICANT (Not for submission under 37 CFR 1.99)	Application Number	13346355
	Filing Date	2012-01-09
	First Named Inventor	Michael J. Schuster et al.
	Art Unit	3751
	Examiner Name	tba
	Attorney Docket Number	171901-1033

	9	3744064		1973-07-10	Preston	
	10	4351071		1982-09-28	Clar	
	11	4700413		1987-10-20	Lopez	
	12	4770388		1988-09-13	Carman	
	13	5083323		1992-01-28	Cannan	
	14	5228152		1993-07-20	Fraley	
	15	5232011		1993-08-03	Royalty	
	16	5327931		1994-07-12	Royalty	
	17	5442820		1995-08-22	Becker	
	18	5542448		1996-08-06	Campbell et al.	
	19	5742951		1998-04-28	Wright et al.	

INFORMATION DISCLOSURE STATEMENT BY APPLICANT (Not for submission under 37 CFR 1.99)		
	Application Number	13346355
	Filing Date	2012-01-09
	First Named Inventor	Michael J. Schuster et al.
	Art Unit	3751
	Examiner Name	tba
	Attorney Docket Number	171901-1033

	20	5775366		1998-07-07	Ray	
	21	6219856	B1	2001-04-24	Alles	
	22	6385788	B1	2002-05-14	Wasielewski	
	23	0136128		1873-02-25	Bralley	
	24	0994746		1911-06-13	Dwyer et al.	
	25	0996743		1911-07-04	Yancey	
	26	1113057		1914-10-06	Schumann	
	27	2465866		1949-03-29	Gaines	
	28	2736037		1956-02-28	Hardie	
	29	2799865		1957-07-23	Schuster	
	30	3321972		1967-05-30	Goldtrap	

INFORMATION DISCLOSURE STATEMENT BY APPLICANT (Not for submission under 37 CFR 1.99)	Application Number	13346355
	Filing Date	2012-01-09
	First Named Inventor	Michael J. Schuster et al.
	Art Unit	3751
	Examiner Name	tba
	Attorney Docket Number	171901-1033

	31	3762395		1973-10-02	Taylor	
	32	4134164		1979-01-16	Sanmartin Rial	
	33	4505231		1985-03-19	Syler	
	34	4527295		1985-07-09	Lacore	
	35	4898124		1990-02-06	Granberg et al.	
	36	5794279		1998-08-18	Schwartz	
	37	5862537		1999-01-26	Osmond	
	38	6295660		2001-10-02	Schuster	
	39	3986216		1976-10-19	Davis et al.	
	40	3994628		1976-11-30	Kemper	
	41	4007498		1977-02-15	Pearson	

INFORMATION DISCLOSURE STATEMENT BY APPLICANT (Not for submission under 37 CFR 1.99)	Application Number	13346355
	Filing Date	2012-01-09
	First Named Inventor	Michael J. Schuster et al.
	Art Unit	3751
	Examiner Name	tba
	Attorney Docket Number	171901-1033

	42	4017916		1977-04-19	Pearson	
	43	4032822		1977-06-28	Un	
	44	4090532		1978-05-23	Story, Jr.	
	45	4145775		1979-03-27	Butler	
	46	4392260		1983-07-12	Bensen	
	47	4707867		1987-11-24	Kawabe et al.	
	48	4764996		1988-08-23	Pino	
	49	4793588		1988-12-27	Laverty, Jr.	
	50	4918764		1990-04-24	Haselswerdt et al.	
	51	4980932		1991-01-01	Stemples	
	52	5007452		1991-04-16	Antunez	

INFORMATION DISCLOSURE STATEMENT BY APPLICANT (Not for submission under 37 CFR 1.99)	Application Number	13346355
	Filing Date	2012-01-09
	First Named Inventor	Michael J. Schuster et al.
	Art Unit	3751
	Examiner Name	tba
	Attorney Docket Number	171901-1033

	53	5036553		1991-08-06	Sanderson	
	54	5052060		1991-10-01	Makita et al.	
	55	5134729		1992-08-04	Shaw	
	56	5245710		1993-09-21	Haselswerdt et al.	
	57	5362026		1994-11-08	Kobayashi et al.	
	58	5432959		1995-07-18	Ellsworth et al.	
	59	5469586		1995-11-28	Tsutsui et al.	
	60	5708991		1998-01-20	DeMarco	
	61	5715860		1998-02-10	Horad	
	62	6202227	B1	2001-03-20	Gurowitz	
	63	6209576	B1	2001-04-03	Davis	

INFORMATION DISCLOSURE STATEMENT BY APPLICANT (Not for submission under 37 CFR 1.99)		
	Application Number	13346355
	Filing Date	2012-01-09
	First Named Inventor	Michael J. Schuster et al.
	Art Unit	3751
	Examiner Name	tba
	Attorney Docket Number	171901-1033

	64	6263519	B1	2001-07-24	Parsons et al.	
	65	6560790	B2	2003-05-13	Saar et al.	
	66	4420845		1983-12-20	Antunez	
	67	6823889		2004-11-30	Schuster	
	68	6409221	B1	2002-06-25	Robinson et al.	
	69	5926868	A	1999-07-27	Bjerke, Thomas E.	
	70	5624073		1997-04-29	Mueller et al.	
If you wish to add additional U.S. Patent citation information please click the Add button.						
U.S.PATENT APPLICATION PUBLICATIONS						
Examiner Initial*	Cite No	Publication Number	Kind Code[1]	Publication Date	Name of Patentee or Applicant of cited Document	Pages,Columns,Lines where Relevant Passages or Relevant Figures Appear
	1	20020092090	A1	2002-07-18	Johnson	
	2	20020162166	A1	2002-11-07	Saar et al.	
If you wish to add additional U.S. Published Application citation information please click the Add button.						

EFS Web 2.1.17

INFORMATION DISCLOSURE STATEMENT BY APPLICANT (Not for submission under 37 CFR 1.99)		
	Application Number	13346355
	Filing Date	2012-01-09
	First Named Inventor	Michael J. Schuster et al.
	Art Unit	3751
	Examiner Name	tba
	Attorney Docket Number	171901-1033

FOREIGN PATENT DOCUMENTS

Examiner Initial*	Cite No	Foreign Document Number[3]	Country Code[2] i	Kind Code[4]	Publication Date	Name of Patentee or Applicant of cited Document	Pages,Columns,Lines where Relevant Passages or Relevant Figures Appear	T[5]
	1							☐

If you wish to add additional Foreign Patent Document citation information please click the Add button

NON-PATENT LITERATURE DOCUMENTS

Examiner Initials*	Cite No	Include name of the author (in CAPITAL LETTERS), title of the article (when appropriate), title of the item (book, magazine, journal, serial, symposium, catalog, etc), date, pages(s), volume-issue number(s), publisher, city and/or country where published.	T[5]
	1	US Patent 6,823,889, File History, 2004-2005 (Great-Grandparent Patent to this Application) (copy not attached).	☐
	2	US Patent 7,743,436, File History, 2004-2010 (Grandparent Patent to this Application) (copy not attached).	☐
	3	US Patent 8,104,105, File History, (2010-1212) (Parent to this Application) (copy not attached).	☐

If you wish to add additional non-patent literature document citation information please click the Add button

EXAMINER SIGNATURE

Examiner Signature		Date Considered	

*EXAMINER: Initial if reference considered, whether or not citation is in conformance with MPEP 609. Draw line through a citation if not in conformance and not considered. Include copy of this form with next communication to applicant.

[1] See Kind Codes of USPTO Patent Documents at www.USPTO.GOV or MPEP 901.04. [2] Enter office that issued the document, by the two-letter code (WIPO Standard ST.3). [3] For Japanese patent documents, the indication of the year of the reign of the Emperor must precede the serial number of the patent document. [4] Kind of document by the appropriate symbols as indicated on the document under WIPO Standard ST.16 if possible. [5] Applicant is to place a check mark here if English language translation is attached.

INFORMATION DISCLOSURE STATEMENT BY APPLICANT (Not for submission under 37 CFR 1.99)		
	Application Number	13346355
	Filing Date	2012-01-09
	First Named Inventor	Michael J. Schuster et al.
	Art Unit	3751
	Examiner Name	tba
	Attorney Docket Number	171901-1033

CERTIFICATION STATEMENT

Please see 37 CFR 1.97 and 1.98 to make the appropriate selection(s):

☐ That each item of information contained in the information disclosure statement was first cited in any communication from a foreign patent office in a counterpart foreign application not more than three months prior to the filing of the information disclosure statement. See 37 CFR 1.97(e)(1).

OR

☐ That no item of information contained in the information disclosure statement was cited in a communication from a foreign patent office in a counterpart foreign application, and, to the knowledge of the person signing the certification after making reasonable inquiry, no item of information contained in the information disclosure statement was known to any individual designated in 37 CFR 1.56(c) more than three months prior to the filing of the information disclosure statement. See 37 CFR 1.97(e)(2).

☐ See attached certification statement.

☐ Fee set forth in 37 CFR 1.17 (p) has been submitted herewith.

☒ None

SIGNATURE

A signature of the applicant or representative is required in accordance with CFR 1.33, 10.18. Please see CFR 1.4(d) for the form of the signature.

Signature	/RDG/	Date (YYYY-MM-DD)	2012-04-25
Name/Print	Robert D. Gravois	Registration Number	67244

This collection of information is required by 37 CFR 1.97 and 1.98. The information is required to obtain or retain a benefit by the public which is to file (and by the USPTO to process) an application. Confidentiality is governed by 35 U.S.C. 122 and 37 CFR 1.14. This collection is estimated to take 1 hour to complete, including gathering, preparing and submitting the completed application form to the USPTO. Time will vary depending upon the individual case. Any comments on the amount of time you require to complete this form and/or suggestions for reducing this burden, should be sent to the Chief Information Officer, U.S. Patent and Trademark Office, U.S. Department of Commerce, P.O. Box 1450, Alexandria, VA 22313-1450. DO NOT SEND FEES OR COMPLETED FORMS TO THIS ADDRESS. **SEND TO: Commissioner for Patents, P.O. Box 1450, Alexandria, VA 22313-1450.**

Privacy Act Statement

The Privacy Act of 1974 (P.L. 93-579) requires that you be given certain information in connection with your submission of the attached form related to a patent application or patent. Accordingly, pursuant to the requirements of the Act, please be advised that: (1) the general authority for the collection of this information is 35 U.S.C. 2(b)(2); (2) furnishing of the information solicited is voluntary; and (3) the principal purpose for which the information is used by the U.S. Patent and Trademark Office is to process and/or examine your submission related to a patent application or patent. If you do not furnish the requested information, the U.S. Patent and Trademark Office may not be able to process and/or examine your submission, which may result in termination of proceedings or abandonment of the application or expiration of the patent.

The information provided by you in this form will be subject to the following routine uses:

1. The information on this form will be treated confidentially to the extent allowed under the Freedom of Information Act (5 U.S.C. 552) and the Privacy Act (5 U.S.C. 552a). Records from this system of records may be disclosed to the Department of Justice to determine whether the Freedom of Information Act requires disclosure of these record s.

2. A record from this system of records may be disclosed, as a routine use, in the course of presenting evidence to a court, magistrate, or administrative tribunal, including disclosures to opposing counsel in the course of settlement negotiations.

3. A record in this system of records may be disclosed, as a routine use, to a Member of Congress submitting a request involving an individual, to whom the record pertains, when the individual has requested assistance from the Member with respect to the subject matter of the record.

4. A record in this system of records may be disclosed, as a routine use, to a contractor of the Agency having need for the information in order to perform a contract. Recipients of information shall be required to comply with the requirements of the Privacy Act of 1974, as amended, pursuant to 5 U.S.C. 552a(m).

5. A record related to an International Application filed under the Patent Cooperation Treaty in this system of records may be disclosed, as a routine use, to the International Bureau of the World Intellectual Property Organization, pursuant to the Patent Cooperation Treaty.

6. A record in this system of records may be disclosed, as a routine use, to another federal agency for purposes of National Security review (35 U.S.C. 181) and for review pursuant to the Atomic Energy Act (42 U.S.C. 218(c)).

7. A record from this system of records may be disclosed, as a routine use, to the Administrator, General Services, or his/her designee, during an inspection of records conducted by GSA as part of that agency's responsibility to recommend improvements in records management practices and programs, under authority of 44 U.S.C. 2904 and 2906. Such disclosure shall be made in accordance with the GSA regulations governing inspection of records for this purpose, and any other relevant (i.e., GSA or Commerce) directive. Such disclosure shall not be used to make determinations about individuals.

8. A record from this system of records may be disclosed, as a routine use, to the public after either publication of the application pursuant to 35 U.S.C. 122(b) or issuance of a patent pursuant to 35 U.S.C. 151. Further, a record may be disclosed, subject to the limitations of 37 CFR 1.14, as a routine use, to the public if the record was filed in an application which became abandoned or in which the proceedings were terminated and which application is referenced by either a published application, an application open to public inspections or an issued patent.

9. A record from this system of records may be disclosed, as a routine use, to a Federal, State, or local law enforcement agency, if the USPTO becomes aware of a violation or potential violation of law or regulation.

Electronic Acknowledgement Receipt

EFS ID:	12625627
Application Number:	13346355
International Application Number:	
Confirmation Number:	7392
Title of Invention:	Toilet Fill Valve with Adjustable Bowl Fill Flow
First Named Inventor/Applicant Name:	Michael J. Schuster
Customer Number:	24504
Filer:	Robert D. Gravois/mary meegan
Filer Authorized By:	Robert D. Gravois
Attorney Docket Number:	171901-1033
Receipt Date:	25-APR-2012
Filing Date:	09-JAN-2012
Time Stamp:	13:46:18
Application Type:	Utility under 35 USC 111(a)

Payment information:

Submitted with Payment	no

File Listing:

Document Number	Document Description	File Name	File Size(Bytes)/ Message Digest	Multi Part /.zip	Pages (if appl.)
1	Transmittal Letter	01601899.PDF	97396 b6868ee4d0321dee25c42ca70c66bc172c3d628f	no	2

Warnings:

Information:

2	Information Disclosure Statement (IDS) Form (SB08)	01601885.PDF	78029 207b541e008a59ade01b5af4073aa47f5c478a66	no	10

Warnings:

Information:

This is not an USPTO supplied IDS fillable form

Total Files Size (in bytes):	175425

This Acknowledgement Receipt evidences receipt on the noted date by the USPTO of the indicated documents, characterized by the applicant, and including page counts, where applicable. It serves as evidence of receipt similar to a Post Card, as described in MPEP 503.

New Applications Under 35 U.S.C. 111
If a new application is being filed and the application includes the necessary components for a filing date (see 37 CFR 1.53(b)-(d) and MPEP 506), a Filing Receipt (37 CFR 1.54) will be issued in due course and the date shown on this Acknowledgement Receipt will establish the filing date of the application.

National Stage of an International Application under 35 U.S.C. 371
If a timely submission to enter the national stage of an international application is compliant with the conditions of 35 U.S.C. 371 and other applicable requirements a Form PCT/DO/EO/903 indicating acceptance of the application as a national stage submission under 35 U.S.C. 371 will be issued in addition to the Filing Receipt, in due course.

New International Application Filed with the USPTO as a Receiving Office
If a new international application is being filed and the international application includes the necessary components for an international filing date (see PCT Article 11 and MPEP 1810), a Notification of the International Application Number and of the International Filing Date (Form PCT/RO/105) will be issued in due course, subject to prescriptions concerning national security, and the date shown on this Acknowledgement Receipt will establish the international filing date of the application.

PATENT

IN THE UNITED STATES PATENT AND TRADEMARK OFFICE

In Re Application of:

Michael J. Schuster, et al.

Serial No.: 13/346,355

Filed: January 9, 2012

For: Toilet Fill Valve With Adjustable Bowl Fill Flow

Confirmation No.: 7392

Group Art Unit: 3751

Examiner: TBA

Docket No. 171901-1033

INFORMATION DISCLOSURE STATEMENT

Mail Stop Amendment
Commissioner for Patents
P.O. Box 1450
Alexandria, Virginia 22313-1450

Sir:

This information disclosure statement is filed in accordance with 37 C.F.R. §§ 1.56, 1.97, and 1.98, and specifically:

☒ under 37 CFR 1.97(b), or
(within Three months of filing national application; or date of entry of international application; or before mailing date of first office action on the merits; whichever occurs last)

☐ under 37 CFR 1.97(c) together with either a:
- ☐ Statement Under 37 C.F.R. 1.97(e), or
- ☐ a $180.00 fee under 37 CFR 1.17(p), or
(After the CFR 1.97(b) time period, but before the final office action or notice of allowance, whichever occurs first)

☐ under 37 CFR 1.97(d) together with a:
- ☐ Statement under 37 CFR 1.97(e), and
- ☐ a $180.00 petition fee set forth in 37 CFR 1.17(p).
(Filed after final office action or notice of allowance, whichever occurs first, but before payment of the issue fee)

☐ Enclosed is a check in the amount of $.

☐ Payment by credit card.

☐ Please charge $ to deposit account .

☒ At any time during the pendency of this application, please charge any fees required to Deposit Account 20-0778 pursuant to 37 CFR 1.25. The Commissioner is hereby requested to credit any overpayment to Deposit Account No. 20-0778.

☒ Applicant(s) submit herewith *Form PTO SB/08A-08B-08a - Information Disclosure Statement by Applicant* together with copies (where required) of patents, publications or other information of which applicant(s) are aware, which applicant(s) believe(s) may or may not be material to the examination of this application and for which there may be a duty to disclose in accordance with 37 CFR 1.56. As required by 37 C.F.R. §1.98(a), a legible copy of each document is provided.

☐ A concise explanation of the relevance of foreign language patents, foreign language publications and other foreign language information listed on PTO Form SB/08A-08B-08a, as presently understood by the individual(s) designated in 37 CFR 1.56(c) most knowledgeable about the content is given on the attached sheet, or where a foreign language patent is cited in a search report or other action by a foreign patent office in a counterpart foreign application, an English language version of the search report or action which indicates the degree of relevance found by the foreign office is listed on the form PTO SB/08A-08B-08a and is enclosed herewith.

The following rights are reserved by the Applicant(s): the right to establish the patentability of the claimed invention over any of the listed documents should they be applied as reference, and/or the right to prove that some of these documents may not be prior art, and/or the right to prove that some of these documents may not be enabling for the teachings they purport to offer.

This statement should not be construed as a representation that an exhaustive search has been made, or that information more material to the examination of the present application does not exist. Any statements or identifications regarding the relevance of any portion(s) of cited references should not be construed as a representation that the most relevant portion(s) have been identified, and the absence of such statements or identifications should not be construed as representations that there are no relevant portion(s). The Examiner is specifically requested not to rely solely on the materials submitted herewith. The Examiner is requested to conduct an independent and thorough review of the documents, and to form independent opinions as to their significance.

It is requested that the information disclosed herein be made of record in this application and that the Examiner initial and return a copy of the enclosed PTO SB/08A-08B-08a to indicate the documents have been considered.

Respectfully Submitted,

THOMAS, KAYDEN, HORSTEMEYER & RISLEY, L.L.P.

By: /RDG/
Robert D. Gravois, Reg. No.: 67,244

400 Interstate North Parkway, S.E.
Suite 1500
Atlanta, Georgia 30339
Phone: (770) 933-9500
Fax: (770) 951-0933

PATENT APPLICATION FEE DETERMINATION RECORD

Substitute for Form PTO-875

Application or Docket Number: 13/346,355

APPLICATION AS FILED - PART I

FOR	(Column 1) NUMBER FILED	(Column 2) NUMBER EXTRA	SMALL ENTITY RATE($)	SMALL ENTITY FEE($)	OR	OTHER THAN SMALL ENTITY RATE($)	OTHER THAN SMALL ENTITY FEE($)
BASIC FEE (37 CFR 1.16(a), (b), or (c))	N/A	N/A	N/A	95		N/A	
SEARCH FEE (37 CFR 1.16(k), (i), or (m))	N/A	N/A	N/A	310		N/A	
EXAMINATION FEE (37 CFR 1.16(o), (p), or (q))	N/A	N/A	N/A	125		N/A	
TOTAL CLAIMS (37 CFR 1.16(i))	15 minus 20 =	*	x 30 =	0.00	OR		
INDEPENDENT CLAIMS (37 CFR 1.16(h))	2 minus 3 =	*	x 125 =	0.00			
APPLICATION SIZE FEE (37 CFR 1.16(s))	If the specification and drawings exceed 100 sheets of paper, the application size fee due is $310 ($155 for small entity) for each additional 50 sheets or fraction thereof. See 35 U.S.C. 41(a)(1)(G) and 37 CFR 1.16(s).			0.00			
MULTIPLE DEPENDENT CLAIM PRESENT (37 CFR 1.16(j))				0.00			
* If the difference in column 1 is less than zero, enter "0" in column 2.			TOTAL	530		TOTAL	

APPLICATION AS AMENDED - PART II

		(Column 1) CLAIMS REMAINING AFTER AMENDMENT		(Column 2) HIGHEST NUMBER PREVIOUSLY PAID FOR	(Column 3) PRESENT EXTRA	SMALL ENTITY RATE($)	SMALL ENTITY ADDITIONAL FEE($)	OR	OTHER THAN SMALL ENTITY RATE($)	OTHER THAN SMALL ENTITY ADDITIONAL FEE($)
AMENDMENT A	Total (37 CFR 1.16(i))	*	Minus	**	=	x =		OR	x =	
AMENDMENT A	Independent (37 CFR 1.16(h))	*	Minus	***	=	x =		OR	x =	
AMENDMENT A	Application Size Fee (37 CFR 1.16(s))									
AMENDMENT A	FIRST PRESENTATION OF MULTIPLE DEPENDENT CLAIM (37 CFR 1.16(j))							OR		
						TOTAL ADD'L FEE		OR	TOTAL ADD'L FEE	

		(Column 1) CLAIMS REMAINING AFTER AMENDMENT		(Column 2) HIGHEST NUMBER PREVIOUSLY PAID FOR	(Column 3) PRESENT EXTRA	RATE($)	ADDITIONAL FEE($)		RATE($)	ADDITIONAL FEE($)
AMENDMENT B	Total (37 CFR 1.16(i))	*	Minus	**	=	x =		OR	x =	
AMENDMENT B	Independent (37 CFR 1.16(h))	*	Minus	***	=	x =		OR	x =	
AMENDMENT B	Application Size Fee (37 CFR 1.16(s))									
AMENDMENT B	FIRST PRESENTATION OF MULTIPLE DEPENDENT CLAIM (37 CFR 1.16(j))							OR		
						TOTAL ADD'L FEE		OR	TOTAL ADD'L FEE	

* If the entry in column 1 is less than the entry in column 2, write "0" in column 3.
** If the "Highest Number Previously Paid For" IN THIS SPACE is less than 20, enter "20".
*** If the "Highest Number Previously Paid For" IN THIS SPACE is less than 3, enter "3".
The "Highest Number Previously Paid For" (Total or Independent) is the highest found in the appropriate box in column 1.

UNITED STATES PATENT AND TRADEMARK OFFICE

UNITED STATES DEPARTMENT OF COMMERCE
United States Patent and Trademark Office
Address: COMMISSIONER FOR PATENTS
P.O. Box 1450
Alexandria, Virginia 22313-1450
www.uspto.gov

APPLICATION NUMBER	FILING or 371(c) DATE	GRP ART UNIT	FIL FEE REC'D	ATTY.DOCKET.NO	TOT CLAIMS	IND CLAIMS
13/346,355	01/09/2012	3751	595	171901-1033	15	2

CONFIRMATION NO. 7392

UPDATED FILING RECEIPT

24504
THOMAS, KAYDEN, HORSTEMEYER & RISLEY, LLP
400 INTERSTATE NORTH PARKWAY SE
SUITE 1500
ATLANTA, GA 30339

OC000000053229547

Date Mailed: 03/23/2012

Receipt is acknowledged of this non-provisional patent application. The application will be taken up for examination in due course. Applicant will be notified as to the results of the examination. Any correspondence concerning the application must include the following identification information: the U.S. APPLICATION NUMBER, FILING DATE, NAME OF APPLICANT, and TITLE OF INVENTION. Fees transmitted by check or draft are subject to collection. Please verify the accuracy of the data presented on this receipt. **If an error is noted on this Filing Receipt, please submit a written request for a Filing Receipt Correction. Please provide a copy of this Filing Receipt with the changes noted thereon. If you received a "Notice to File Missing Parts" for this application, please submit any corrections to this Filing Receipt with your reply to the Notice. When the USPTO processes the reply to the Notice, the USPTO will generate another Filing Receipt incorporating the requested corrections**

Applicant(s)

Michael J. Schuster, Joliet, IL;
Larry Schneider, Wadsworth, IL;

Assignment For Published Patent Application

MJSI, INC., Shorewood, IL

Power of Attorney: The patent practitioners associated with Customer Number 33852

Domestic Priority data as claimed by applicant

This application is a CON of 12/786,904 05/25/2010 PAT 8104105 *
which is a CON of 10/958,797 10/05/2004 PAT 7743436
which is a CIP of 10/798,606 03/11/2004 PAT 6823889
(*)Data provided by applicant is not consistent with PTO records.

Foreign Applications (You may be eligible to benefit from the **Patent Prosecution Highway** program at the USPTO. Please see http://www.uspto.gov for more information.)

If Required, Foreign Filing License Granted: 01/19/2012

The country code and number of your priority application, to be used for filing abroad under the Paris Convention, is **US 13/346,355**

Projected Publication Date: Request for Non-Publication Acknowledged

Non-Publication Request: Yes

Early Publication Request: No
**** SMALL ENTITY ****

Title

Toilet Fill Valve with Adjustable Bowl Fill Flow

Preliminary Class

004

PROTECTING YOUR INVENTION OUTSIDE THE UNITED STATES

Since the rights granted by a U.S. patent extend only throughout the territory of the United States and have no effect in a foreign country, an inventor who wishes patent protection in another country must apply for a patent in a specific country or in regional patent offices. Applicants may wish to consider the filing of an international application under the Patent Cooperation Treaty (PCT). An international (PCT) application generally has the same effect as a regular national patent application in each PCT-member country. The PCT process **simplifies** the filing of patent applications on the same invention in member countries, but **does not result** in a grant of "an international patent" and does not eliminate the need of applicants to file additional documents and fees in countries where patent protection is desired.

Almost every country has its own patent law, and a person desiring a patent in a particular country must make an application for patent in that country in accordance with its particular laws. Since the laws of many countries differ in various respects from the patent law of the United States, applicants are advised to seek guidance from specific foreign countries to ensure that patent rights are not lost prematurely.

Applicants also are advised that in the case of inventions made in the United States, the Director of the USPTO must issue a license before applicants can apply for a patent in a foreign country. The filing of a U.S. patent application serves as a request for a foreign filing license. The application's filing receipt contains further information and guidance as to the status of applicant's license for foreign filing.

Applicants may wish to consult the USPTO booklet, "General Information Concerning Patents" (specifically, the section entitled "Treaties and Foreign Patents") for more information on timeframes and deadlines for filing foreign patent applications. The guide is available either by contacting the USPTO Contact Center at 800-786-9199, or it can be viewed on the USPTO website at http://www.uspto.gov/web/offices/pac/doc/general/index.html.

For information on preventing theft of your intellectual property (patents, trademarks and copyrights), you may wish to consult the U.S. Government website, http://www.stopfakes.gov. Part of a Department of Commerce initiative, this website includes self-help "toolkits" giving innovators guidance on how to protect intellectual property in specific countries such as China, Korea and Mexico. For questions regarding patent enforcement issues, applicants may call the U.S. Government hotline at 1-866-999-HALT (1-866-999-4158).

LICENSE FOR FOREIGN FILING UNDER

Title 35, United States Code, Section 184

Title 37, Code of Federal Regulations, 5.11 & 5.15

GRANTED

The applicant has been granted a license under 35 U.S.C. 184, if the phrase "IF REQUIRED, FOREIGN FILING LICENSE GRANTED" followed by a date appears on this form. Such licenses are issued in all applications where the conditions for issuance of a license have been met, regardless of whether or not a license may be required as

set forth in 37 CFR 5.15. The scope and limitations of this license are set forth in 37 CFR 5.15(a) unless an earlier license has been issued under 37 CFR 5.15(b). The license is subject to revocation upon written notification. The date indicated is the effective date of the license, unless an earlier license of similar scope has been granted under 37 CFR 5.13 or 5.14.

This license is to be retained by the licensee and may be used at any time on or after the effective date thereof unless it is revoked. This license is automatically transferred to any related applications(s) filed under 37 CFR 1.53(d). This license is not retroactive.

The grant of a license does not in any way lessen the responsibility of a licensee for the security of the subject matter as imposed by any Government contract or the provisions of existing laws relating to espionage and the national security or the export of technical data. Licensees should apprise themselves of current regulations especially with respect to certain countries, of other agencies, particularly the Office of Defense Trade Controls, Department of State (with respect to Arms, Munitions and Implements of War (22 CFR 121-128)); the Bureau of Industry and Security, Department of Commerce (15 CFR parts 730-774); the Office of Foreign AssetsControl, Department of Treasury (31 CFR Parts 500+) and the Department of Energy.

NOT GRANTED

No license under 35 U.S.C. 184 has been granted at this time, if the phrase "IF REQUIRED, FOREIGN FILING LICENSE GRANTED" DOES NOT appear on this form. Applicant may still petition for a license under 37 CFR 5.12, if a license is desired before the expiration of 6 months from the filing date of the application. If 6 months has lapsed from the filing date of this application and the licensee has not received any indication of a secrecy order under 35 U.S.C. 181, the licensee may foreign file the application pursuant to 37 CFR 5.15(b).

SelectUSA

The United States represents the largest, most dynamic marketplace in the world and is an unparalleled location for business investment, innovation and commercialization of new technologies. The USA offers tremendous resources and advantages for those who invest and manufacture goods here. Through SelectUSA, our nation works to encourage, facilitate, and accelerate business investment. To learn more about why the USA is the best country in the world to develop technology, manufacture products, and grow your business, visit SelectUSA.gov.

IN THE UNITED STATES PATENT AND TRADEMARK OFFICE

In Re Application Of: Schuster, et al.

Group No.: 3751

Serial No.: 13/346,355

Docket No. 171901-1033

Filed: January 9, 2012

Confirmation No.: 7392

For: Toilet Fill Valve With Adjustable Bowl Fill Flow

RESPONSE TO MISSING PARTS NOTICE

Mail Stop Missing Parts
Commissioner for Patents
P.O. Box 1450
Alexandria, Virginia 22313-1450

Sir:

In response to the Notice to File Missing Parts of Application, Filing Date Granted, dated January 24, 2012, please find enclosed:

1. Executed Declaration;
2. Replacement Abstract; and
3. Government fee in the amount of $65.00 to cover the additional surcharge fee for filing this Response to the Missing Parts Notice.

The Commissioner is authorized to charge Deposit Account 20-0778 for any deficiencies or credit any over payments.

Respectfully Submitted,

THOMAS, KAYDEN, HORSTEMEYER & RISLEY, L.L.P.

By: /RDG/
Robert D. Gravois, Reg. No.: 67,244

Suite 1500, 400 Interstate North Parkway
Atlanta, Georgia 30339-5948
(770) 933-9500

Docket No. 1008-100501 **PATENT APPLICATION**

COMBINED DECLARATION AND POWER OF ATTORNEY

As a below named inventor, I hereby declare that:

My residence, post office address, and citizenship are as stated below next to my name.

I believe I am the original, first and sole inventor (if only one name is listed below) or an original, first and joint inventor (if plural names are listed below) of the subject matter which is claimed and for which a patent is sought on the invention entitled:

TOILET FILL VALVE WITH ADJUSTABLE BOWL FILL FLOW

the specification of which

☒ is attached hereto.

☐ was filed on _____ as U.S. Patent Application Serial Number _____.

☐ was filed on _____ as a U.S. Patent Application under Express Mail Number _____.

☐ is set forth in PCT International Application Number _____ filed on _____;
☐ and as amended under PCT Article 19 on _____

I hereby state that I have reviewed and understand the contents of the above identified specification, including the claims, as amended by any amendment referred to above. I acknowledge the duty to disclose information which is material to the patentability of the above identified invention as defined in Title 37, Code of Federal Regulations §1.56.

CLAIM FOR BENEFIT OF U.S. PROVISIONAL APPLICATION(S) UNDER 35 U.S.C. §119(e)

I hereby claim the benefit under Title 35, United States Code §119(e) of any United States provisional application(s) listed below:

APPLICATION SERIAL NUMBER	FILING DATE

CLAIM FOR BENEFIT OF U.S. APPLICATION(S) UNDER 35 U.S.C. §120

I hereby claim the benefit under 35 U.S.C. §120 of any United States application(s) or PCT International Application(s) designating the United States of America listed below and, insofar as the subject matter of each of the claims of this application is not disclosed in the prior application(s) in the manner provided by the first paragraph of 35 USC §112, I acknowledge the duty to disclose material information as defined in 37 CFR §1.56(a) which became available between the filing date of the prior application and the national or PCT international filing date of this application.

APPLICATION SERIAL NUMBER	FILING DATE	STATUS (patented/pending/abandoned)
10/798,606	March 11, 2004	Pending

CLAIM OF FOREIGN PRIORITY UNDER 35 U.S.C. §119

I hereby claim foreign priority benefits under Title 35, United States Code Section 119 of any foreign application(s) for patent or inventor(s) certificate listed below and have also identified below any foreign application for patent or inventor(s) certificate having a filing date before that of the application of which priority is claimed:

COUNTRY	APPLICATION NUMBER	DATE FILED	PRIORITY CLAIMED UNDER 35 U.S.C. §119
			☐ Yes ☐ No
			☐ Yes ☐ No

POWER OF ATTORNEY

As a named inventor, I hereby appoint the practitioners associated with

Customer Number: 33852

as my/our attorney(s) or agent(s) to prosecute this application and to transact all business in the United States Patent and Trademark Office connected therewith.

Correspondence Address:

Please direct all correspondence to the address associated with the above-mentioned customer number, which is D'Aurelio & Mathews, LLC, 96 Church Street, Chagrin Falls, Ohio 44022.

Please direct all telephone calls in the first instance to:

Michael J. D'Aurelio
Telephone: (440) 729-7450
Facsimile: (440) 729-7465

I hereby declare that all statements made herein of my own knowledge are true and that all statements made on information and belief are believed to be true; and further that these statements were made with knowledge that willful false statements and the like are punishable by fine or imprisonment, or both, under Section 1001 of Title 18 of the United States Code, and that such willful false statements may jeopardize the validity of the application or any patent issued therein.

Signature of Sole or First Inventor

Full Name of Inventor: Michael J. Schuster
Residence: 612 Nicholson Street, Joliet, Illinois 60435
Post Office Address: 612 Nicholson Street, Joliet, Illinois 60435
Citizenship: United States

Inventor's Signature: Michael J. Schuster **Date:** 9-22-04

Signature of Second Inventor

Full Name of Inventor: Larry Schneider
Residence: 39155 N. Pine Grove Avenue, Wadsworth, Illinois 60083
Post Office Address: 39155 N. Pine Grove Avenue, Wadsworth, Illinois 60083
Citizenship: United States

Inventor's Signature: Larry Schneider **Date:** 9/23/04

Signature of Third Inventor

Full Name of Inventor: N/A
Residence: N/A
Post Office Address: N/A
Citizenship: N/A

Inventor's Signature: _____ **Date:** _____

ABSTRACT

A toilet fill valve includes a water inlet and a first water outlet configured to supply water to a toilet tank. A bowl fill outlet port extends from a portion of a body of the toilet fill valve. The toilet fill valve includes a bowl fill valve having a bowl fill valve inlet port and a bowl fill valve outlet port, wherein the bowl fill valve inlet port is compatible with the bowl fill outlet port and the bowl fill valve inlet port being coupled to the bowl fill outlet port, the bowl fill valve radially extending from a portion of a body of the toilet fill valve. The bowl fill valve is configured to supply an adjustable flow of water out the bowl fill outlet port for filling a toilet bowl during a flush cycle of a toilet.

Fluidmaster, Inc. - EX1009, Page 161
IPR2024-00633 (Fluidmaster Inc v. Danco Inc)

Electronic Patent Application Fee Transmittal

Application Number:	13346355
Filing Date:	09-Jan-2012
Title of Invention:	Toilet Fill Valve with Adjustable Bowl Fill Flow
First Named Inventor/Applicant Name:	Michael J. Schuster
Filer:	Robert D. Gravois/mary meegan
Attorney Docket Number:	171901-1033

Filed as Small Entity

Utility under 35 USC 111(a) Filing Fees

Description	Fee Code	Quantity	Amount	Sub-Total in USD($)
Basic Filing:				
Pages:				
Claims:				
Miscellaneous-Filing:				
Late filing fee for oath or declaration	2051	1	65	65
Petition:				
Patent-Appeals-and-Interference:				
Post-Allowance-and-Post-Issuance:				
Extension-of-Time:				

Description	Fee Code	Quantity	Amount	Sub-Total in USD($)
Miscellaneous:				
		Total in USD ($)		**65**

Electronic Acknowledgement Receipt

EFS ID:	12293818
Application Number:	13346355
International Application Number:	
Confirmation Number:	7392
Title of Invention:	Toilet Fill Valve with Adjustable Bowl Fill Flow
First Named Inventor/Applicant Name:	Michael J. Schuster
Customer Number:	24504
Filer:	Robert D. Gravois/mary meegan
Filer Authorized By:	Robert D. Gravois
Attorney Docket Number:	171901-1033
Receipt Date:	13-MAR-2012
Filing Date:	09-JAN-2012
Time Stamp:	16:09:26
Application Type:	Utility under 35 USC 111(a)

Payment information:

Submitted with Payment	yes
Payment Type	Credit Card
Payment was successfully received in RAM	$65
RAM confirmation Number	3137
Deposit Account	200778
Authorized User	D'AURELIO,MICHAEL J

The Director of the USPTO is hereby authorized to charge indicated fees and credit any overpayment as follows:

Charge any Additional Fees required under 37 C.F.R. Section 1.16 (National application filing, search, and examination fees)

Charge any Additional Fees required under 37 C.F.R. Section 1.21 (Miscellaneous fees and charges)

File Listing:

Document Number	Document Description	File Name	File Size(Bytes)/ Message Digest	Multi Part /.zip	Pages (if appl.)
1	Applicant Response to Pre-Exam Formalities Notice	01571691.PDF	56888 d36fa23e9a5d27adcbc8802fede5034cb0248e26	no	1
Warnings:					
Information:					
2	Oath or Declaration filed	01523416.PDF	101533 3e18b921763ed1222b6d147e17c159f080b4ac49	no	2
Warnings:					
Information:					
3	Abstract	01571702.PDF	57802 4db6111fd2b127fc5d5fe608451b22011bf9f840	no	1
Warnings:					
Information:					
4	Fee Worksheet (SB06)	fee-info.pdf	30064 cee51302e72e1b982da68c8ab1a3c544df4bb8d3	no	2
Warnings:					
Information:					
		Total Files Size (in bytes):	246287		

This Acknowledgement Receipt evidences receipt on the noted date by the USPTO of the indicated documents, characterized by the applicant, and including page counts, where applicable. It serves as evidence of receipt similar to a Post Card, as described in MPEP 503.

<u>New Applications Under 35 U.S.C. 111</u>
If a new application is being filed and the application includes the necessary components for a filing date (see 37 CFR 1.53(b)-(d) and MPEP 506), a Filing Receipt (37 CFR 1.54) will be issued in due course and the date shown on this Acknowledgement Receipt will establish the filing date of the application.

<u>National Stage of an International Application under 35 U.S.C. 371</u>
If a timely submission to enter the national stage of an international application is compliant with the conditions of 35 U.S.C. 371 and other applicable requirements a Form PCT/DO/EO/903 indicating acceptance of the application as a national stage submission under 35 U.S.C. 371 will be issued in addition to the Filing Receipt, in due course.

<u>New International Application Filed with the USPTO as a Receiving Office</u>
If a new international application is being filed and the international application includes the necessary components for an international filing date (see PCT Article 11 and MPEP 1810), a Notification of the International Application Number and of the International Filing Date (Form PCT/RO/105) will be issued in due course, subject to prescriptions concerning national security, and the date shown on this Acknowledgement Receipt will establish the international filing date of the application.

UNITED STATES PATENT AND TRADEMARK OFFICE

UNITED STATES DEPARTMENT OF COMMERCE
United States Patent and Trademark Office
Address: COMMISSIONER FOR PATENTS
P.O. Box 1450
Alexandria, Virginia 22313-1450
www.uspto.gov

APPLICATION NUMBER	FILING OR 371(C) DATE	FIRST NAMED APPLICANT	ATTY. DOCKET NO./TITLE
13/346,355	01/09/2012	Michael J. Schuster	171901-1033

CONFIRMATION NO. 7392

FORMALITIES LETTER

24504
THOMAS, KAYDEN, HORSTEMEYER & RISLEY, LLP
400 INTERSTATE NORTH PARKWAY SE
SUITE 1500
ATLANTA, GA 30339

OC000000052101674

Date Mailed: 01/24/2012

NOTICE TO FILE MISSING PARTS OF NONPROVISIONAL APPLICATION

FILED UNDER 37 CFR 1.53(b)

Filing Date Granted

Items Required To Avoid Abandonment:

An application number and filing date have been accorded to this application. The item(s) indicated below, however, are missing. Applicant is given **TWO MONTHS** from the date of this Notice within which to file all required items below to avoid abandonment. Extensions of time may be obtained by filing a petition accompanied by the extension fee under the provisions of 37 CFR 1.136(a).

- The oath or declaration is missing.
  A properly signed oath or declaration in compliance with 37 CFR 1.63, identifying the application by the above Application Number and Filing Date, is required.
  Note: If a petition under 37 CFR 1.47 is being filed, an oath or declaration in compliance with 37 CFR 1.63 signed by all available joint inventors, or if no inventor is available by a party with sufficient proprietary interest, is required.

The application is informal since it does not comply with the regulations for the reason(s) indicated below.

The required item(s) identified below must be timely submitted to avoid abandonment:

- A replacement abstract not exceeding 150 words in length and commencing on a separate sheet in compliance with 37 CFR 1.72(b) and 37 CFR 1.121 is required.

Applicant is cautioned that correction of the above items may cause the specification and drawings page count to exceed 100 pages. If the specification and drawings exceed 100 pages, applicant will need to submit the required application size fee.

The applicant needs to satisfy supplemental fees problems indicated below.

The required item(s) identified below must be timely submitted to avoid abandonment:

- A surcharge (for late submission of filing fee, search fee, examination fee or oath or declaration) as set forth in 37 CFR 1.16(f) of $**65** for a small entity in compliance with 37 CFR 1.27, must be submitted.

SUMMARY OF FEES DUE:

Total fee(s) required within **TWO MONTHS** from the date of this Notice is $**65** for a small entity
- $**65** Surcharge.

Replies should be mailed to:

Mail Stop Missing Parts
Commissioner for Patents
P.O. Box 1450
Alexandria VA 22313-1450

Registered users of EFS-Web may alternatively submit their reply to this notice via EFS-Web.
https://sportal.uspto.gov/authenticate/AuthenticateUserLocalEPF.html

For more information about EFS-Web please call the USPTO Electronic Business Center at **1-866-217-9197** or visit our website at http://www.uspto.gov/ebc.

If you are not using EFS-Web to submit your reply, you must include a copy of this notice.

/mkibret/

Office of Data Management, Application Assistance Unit (571) 272-4000, or (571) 272-4200, or 1-888-786-0101

UNITED STATES PATENT AND TRADEMARK OFFICE

UNITED STATES DEPARTMENT OF COMMERCE
United States Patent and Trademark Office
Address: COMMISSIONER FOR PATENTS
P.O. Box 1450
Alexandria, Virginia 22313-1450
www.uspto.gov

APPLICATION NUMBER	FILING or 371(c) DATE	GRP ART UNIT	FIL FEE REC'D	ATTY.DOCKET.NO	TOT CLAIMS	IND CLAIMS
13/346,355	01/09/2012	3751	530	171901-1033	15	2

CONFIRMATION NO. 7392

FILING RECEIPT

24504
THOMAS, KAYDEN, HORSTEMEYER & RISLEY, LLP
400 INTERSTATE NORTH PARKWAY SE
SUITE 1500
ATLANTA, GA 30339

OC000000052101673

Date Mailed: 01/24/2012

Receipt is acknowledged of this non-provisional patent application. The application will be taken up for examination in due course. Applicant will be notified as to the results of the examination. Any correspondence concerning the application must include the following identification information: the U.S. APPLICATION NUMBER, FILING DATE, NAME OF APPLICANT, and TITLE OF INVENTION. Fees transmitted by check or draft are subject to collection. Please verify the accuracy of the data presented on this receipt. **If an error is noted on this Filing Receipt, please submit a written request for a Filing Receipt Correction. Please provide a copy of this Filing Receipt with the changes noted thereon. If you received a "Notice to File Missing Parts" for this application, please submit any corrections to this Filing Receipt with your reply to the Notice. When the USPTO processes the reply to the Notice, the USPTO will generate another Filing Receipt incorporating the requested corrections**

Applicant(s)
Michael J. Schuster, Joliet, IL;
Larry Schneider, Wadsworth, IL;

Assignment For Published Patent Application
MJSI, INC., Shorewood, IL

Power of Attorney: None

Domestic Priority data as claimed by applicant
This application is a CON of 12/786,904 05/25/2010 PAT 8104105 *
which is a CON of 10/958,797 10/05/2004 PAT 7743436
which is a CIP of 10/798,606 03/11/2004 PAT 6823889
(*)Data provided by applicant is not consistent with PTO records.

Foreign Applications (You may be eligible to benefit from the **Patent Prosecution Highway** program at the USPTO. Please see http://www.uspto.gov for more information.)

If Required, Foreign Filing License Granted: 01/19/2012

The country code and number of your priority application, to be used for filing abroad under the Paris Convention, is **US 13/346,355**

Projected Publication Date: Request for Non-Publication Acknowledged

Non-Publication Request: Yes

Early Publication Request: No
**** SMALL ENTITY ****

Title

Toilet Fill Valve with Adjustable Bowl Fill Flow

Preliminary Class

004

PROTECTING YOUR INVENTION OUTSIDE THE UNITED STATES

Since the rights granted by a U.S. patent extend only throughout the territory of the United States and have no effect in a foreign country, an inventor who wishes patent protection in another country must apply for a patent in a specific country or in regional patent offices. Applicants may wish to consider the filing of an international application under the Patent Cooperation Treaty (PCT). An international (PCT) application generally has the same effect as a regular national patent application in each PCT-member country. The PCT process **simplifies** the filing of patent applications on the same invention in member countries, but **does not result** in a grant of "an international patent" and does not eliminate the need of applicants to file additional documents and fees in countries where patent protection is desired.

Almost every country has its own patent law, and a person desiring a patent in a particular country must make an application for patent in that country in accordance with its particular laws. Since the laws of many countries differ in various respects from the patent law of the United States, applicants are advised to seek guidance from specific foreign countries to ensure that patent rights are not lost prematurely.

Applicants also are advised that in the case of inventions made in the United States, the Director of the USPTO must issue a license before applicants can apply for a patent in a foreign country. The filing of a U.S. patent application serves as a request for a foreign filing license. The application's filing receipt contains further information and guidance as to the status of applicant's license for foreign filing.

Applicants may wish to consult the USPTO booklet, "General Information Concerning Patents" (specifically, the section entitled "Treaties and Foreign Patents") for more information on timeframes and deadlines for filing foreign patent applications. The guide is available either by contacting the USPTO Contact Center at 800-786-9199, or it can be viewed on the USPTO website at http://www.uspto.gov/web/offices/pac/doc/general/index.html.

For information on preventing theft of your intellectual property (patents, trademarks and copyrights), you may wish to consult the U.S. Government website, http://www.stopfakes.gov. Part of a Department of Commerce initiative, this website includes self-help "toolkits" giving innovators guidance on how to protect intellectual property in specific countries such as China, Korea and Mexico. For questions regarding patent enforcement issues, applicants may call the U.S. Government hotline at 1-866-999-HALT (1-866-999-4158).

LICENSE FOR FOREIGN FILING UNDER

Title 35, United States Code, Section 184

Title 37, Code of Federal Regulations, 5.11 & 5.15

GRANTED

The applicant has been granted a license under 35 U.S.C. 184, if the phrase "IF REQUIRED, FOREIGN FILING LICENSE GRANTED" followed by a date appears on this form. Such licenses are issued in all applications where the conditions for issuance of a license have been met, regardless of whether or not a license may be required as

set forth in 37 CFR 5.15. The scope and limitations of this license are set forth in 37 CFR 5.15(a) unless an earlier license has been issued under 37 CFR 5.15(b). The license is subject to revocation upon written notification. The date indicated is the effective date of the license, unless an earlier license of similar scope has been granted under 37 CFR 5.13 or 5.14.

This license is to be retained by the licensee and may be used at any time on or after the effective date thereof unless it is revoked. This license is automatically transferred to any related applications(s) filed under 37 CFR 1.53(d). This license is not retroactive.

The grant of a license does not in any way lessen the responsibility of a licensee for the security of the subject matter as imposed by any Government contract or the provisions of existing laws relating to espionage and the national security or the export of technical data. Licensees should apprise themselves of current regulations especially with respect to certain countries, of other agencies, particularly the Office of Defense Trade Controls, Department of State (with respect to Arms, Munitions and Implements of War (22 CFR 121-128)); the Bureau of Industry and Security, Department of Commerce (15 CFR parts 730-774); the Office of Foreign AssetsControl, Department of Treasury (31 CFR Parts 500+) and the Department of Energy.

NOT GRANTED

No license under 35 U.S.C. 184 has been granted at this time, if the phrase "IF REQUIRED, FOREIGN FILING LICENSE GRANTED" DOES NOT appear on this form. Applicant may still petition for a license under 37 CFR 5.12, if a license is desired before the expiration of 6 months from the filing date of the application. If 6 months has lapsed from the filing date of this application and the licensee has not received any indication of a secrecy order under 35 U.S.C. 181, the licensee may foreign file the application pursuant to 37 CFR 5.15(b).

SelectUSA

The United States represents the largest, most dynamic marketplace in the world and is an unparalleled location for business investment, innovation and commercialization of new technologies. The USA offers tremendous resources and advantages for those who invest and manufacture goods here. Through SelectUSA, our nation works to encourage, facilitate, and accelerate business investment. To learn more about why the USA is the best country in the world to develop technology, manufacture products, and grow your business, visit SelectUSA.gov.

PATENT APPLICATION FEE DETERMINATION RECORD

Substitute for Form PTO-875

Application or Docket Number: 13/346,355

APPLICATION AS FILED - PART I

FOR	(Column 1) NUMBER FILED	(Column 2) NUMBER EXTRA	SMALL ENTITY RATE($)	SMALL ENTITY FEE($)	OR	OTHER THAN SMALL ENTITY RATE($)	OTHER THAN SMALL ENTITY FEE($)
BASIC FEE (37 CFR 1.16(a), (b), or (c))	N/A	N/A	N/A	95		N/A	
SEARCH FEE (37 CFR 1.16(k), (i), or (m))	N/A	N/A	N/A	310		N/A	
EXAMINATION FEE (37 CFR 1.16(o), (p), or (q))	N/A	N/A	N/A	125		N/A	
TOTAL CLAIMS (37 CFR 1.16(i))	15 minus 20 =	*	x 30 =	0.00	OR		
INDEPENDENT CLAIMS (37 CFR 1.16(h))	2 minus 3 =	*	x 125 =	0.00			
APPLICATION SIZE FEE (37 CFR 1.16(s))	If the specification and drawings exceed 100 sheets of paper, the application size fee due is $310 ($155 for small entity) for each additional 50 sheets or fraction thereof. See 35 U.S.C. 41(a)(1)(G) and 37 CFR 1.16(s).			0.00			
MULTIPLE DEPENDENT CLAIM PRESENT (37 CFR 1.16(j))				0.00			
* If the difference in column 1 is less than zero, enter "0" in column 2.			TOTAL	530		TOTAL	

APPLICATION AS AMENDED - PART II

AMENDMENT A

	(Column 1) CLAIMS REMAINING AFTER AMENDMENT		(Column 2) HIGHEST NUMBER PREVIOUSLY PAID FOR	(Column 3) PRESENT EXTRA	SMALL ENTITY RATE($)	SMALL ENTITY ADDITIONAL FEE($)	OR	OTHER THAN SMALL ENTITY RATE($)	OTHER THAN SMALL ENTITY ADDITIONAL FEE($)
Total (37 CFR 1.16(i))	*	Minus	**	=	x =		OR	x =	
Independent (37 CFR 1.16(h))	*	Minus	***	=	x =		OR	x =	
Application Size Fee (37 CFR 1.16(s))									
FIRST PRESENTATION OF MULTIPLE DEPENDENT CLAIM (37 CFR 1.16(j))							OR		
					TOTAL ADD'L FEE		OR	TOTAL ADD'L FEE	

AMENDMENT B

	(Column 1) CLAIMS REMAINING AFTER AMENDMENT		(Column 2) HIGHEST NUMBER PREVIOUSLY PAID FOR	(Column 3) PRESENT EXTRA	RATE($)	ADDITIONAL FEE($)		RATE($)	ADDITIONAL FEE($)
Total (37 CFR 1.16(i))	*	Minus	**	=	x =		OR	x =	
Independent (37 CFR 1.16(h))	*	Minus	***	=	x =		OR	x =	
Application Size Fee (37 CFR 1.16(s))									
FIRST PRESENTATION OF MULTIPLE DEPENDENT CLAIM (37 CFR 1.16(j))							OR		
					TOTAL ADD'L FEE		OR	TOTAL ADD'L FEE	

* If the entry in column 1 is less than the entry in column 2, write "0" in column 3.
** If the "Highest Number Previously Paid For" IN THIS SPACE is less than 20, enter "20".
*** If the "Highest Number Previously Paid For" IN THIS SPACE is less than 3, enter "3".
The "Highest Number Previously Paid For" (Total or Independent) is the highest found in the appropriate box in column 1.

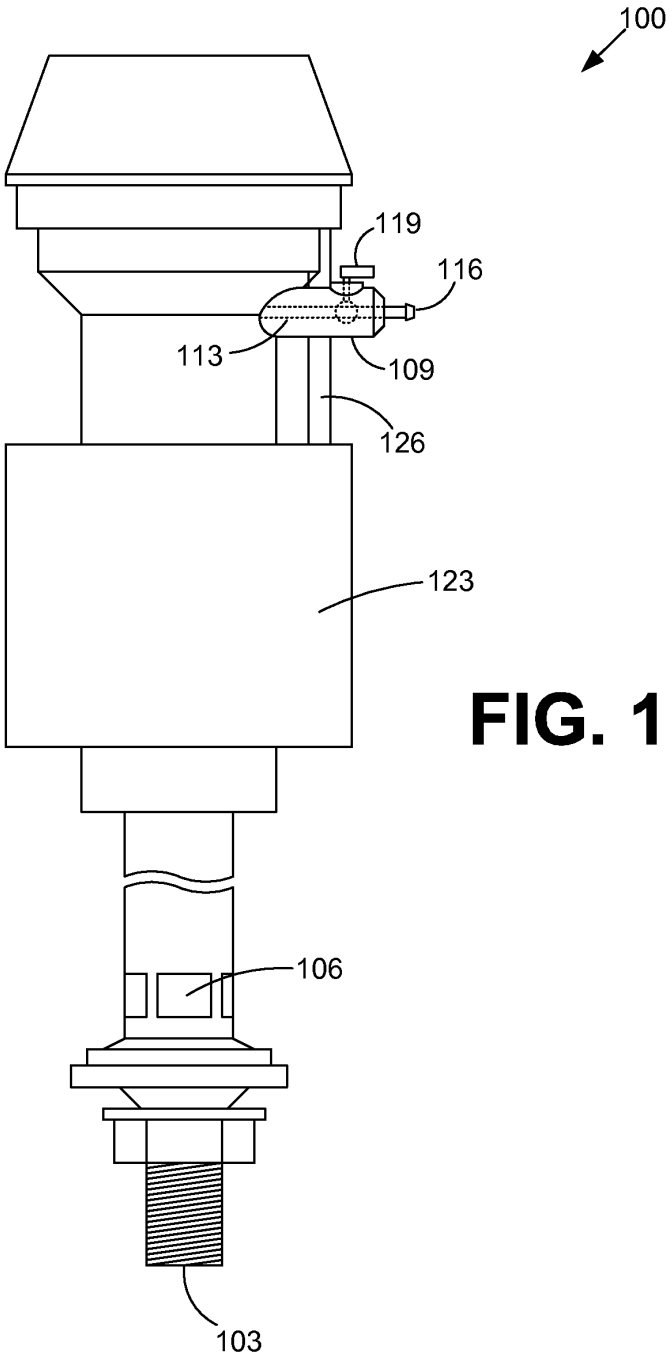

FIG. 1

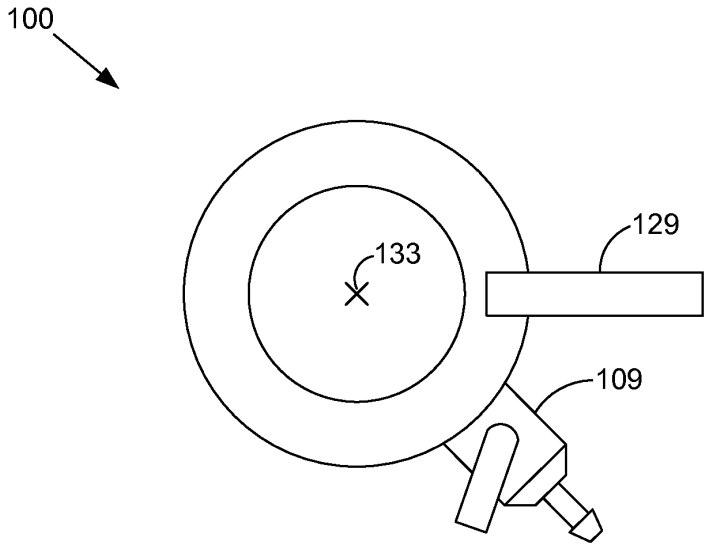

FIG. 2

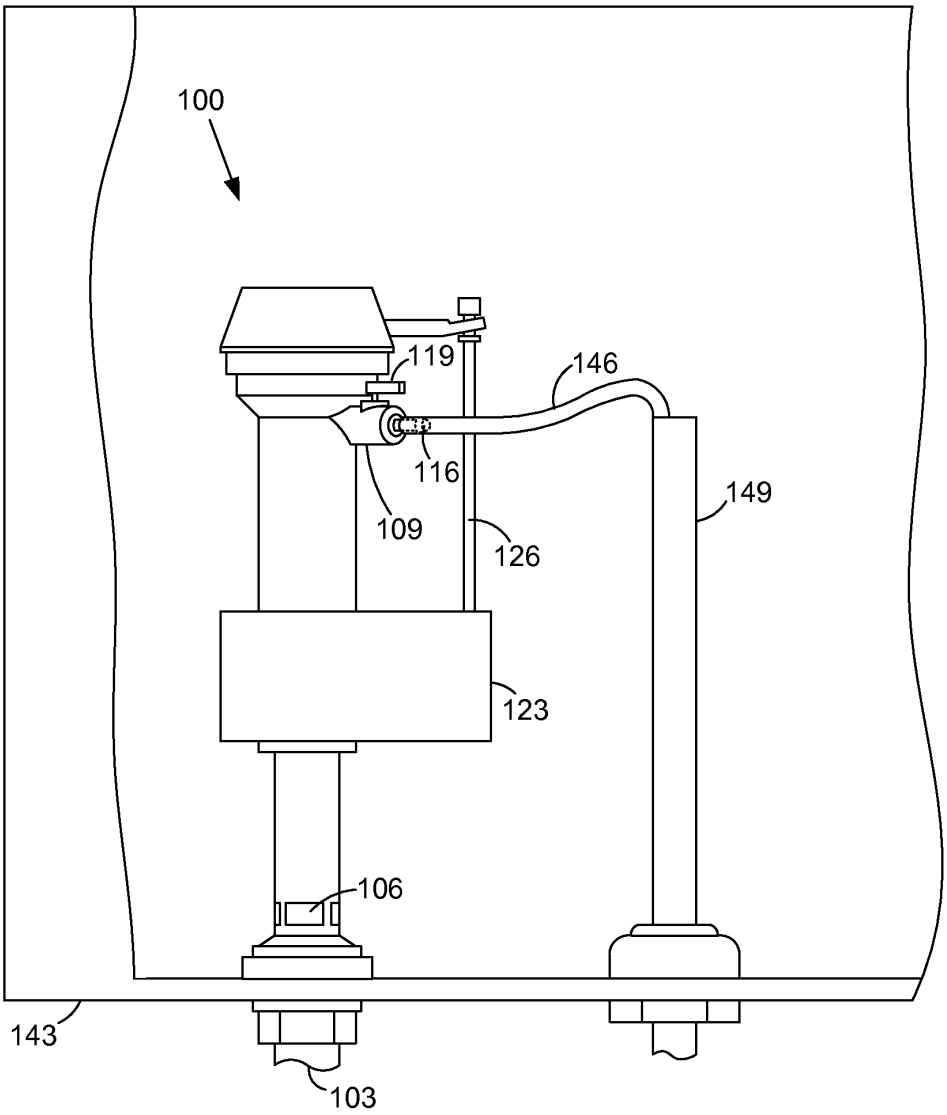

FIG. 3

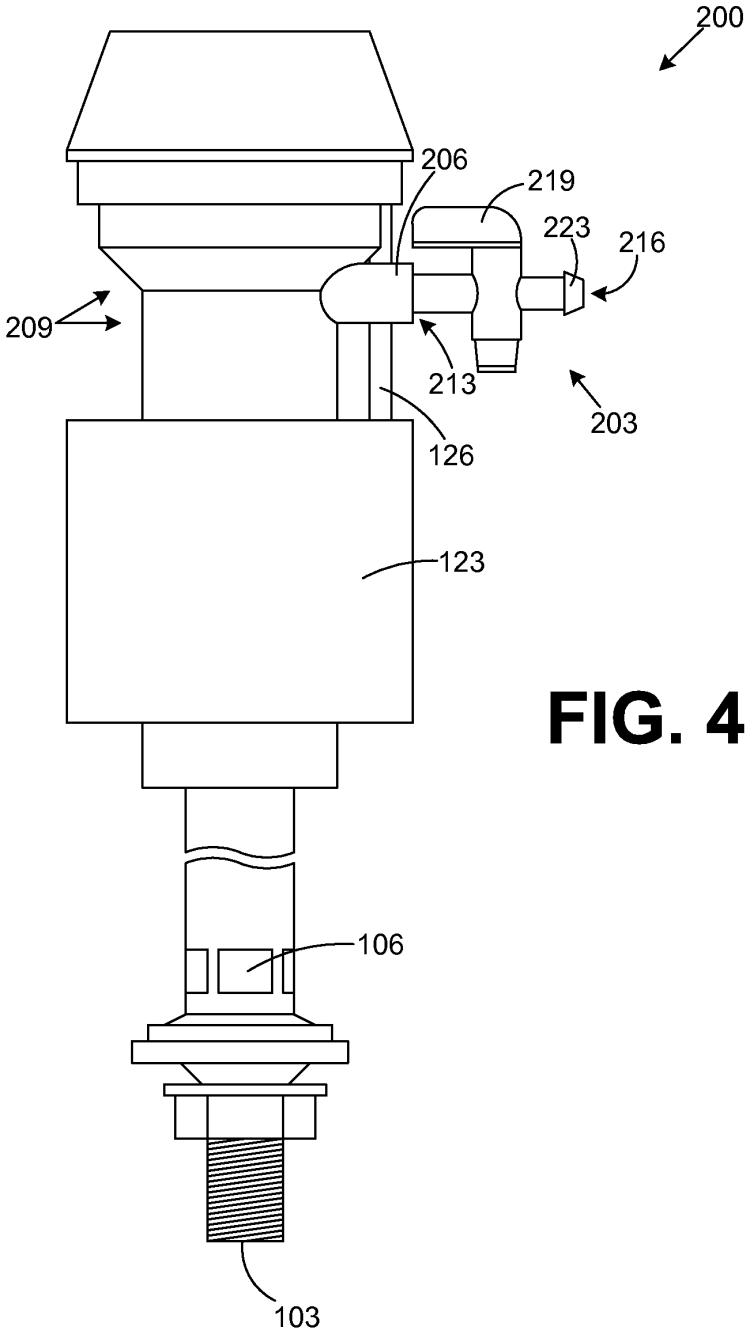

FIG. 4

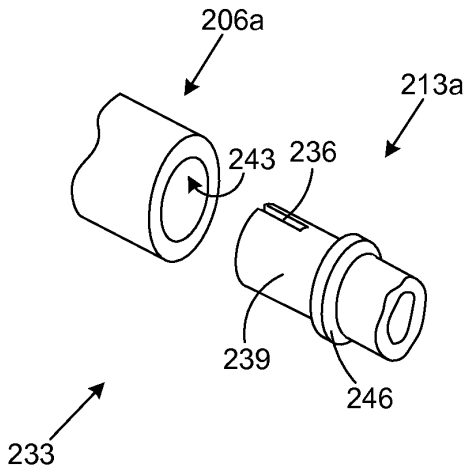
206a
213a
243
236
239
246
233

FIG. 5A

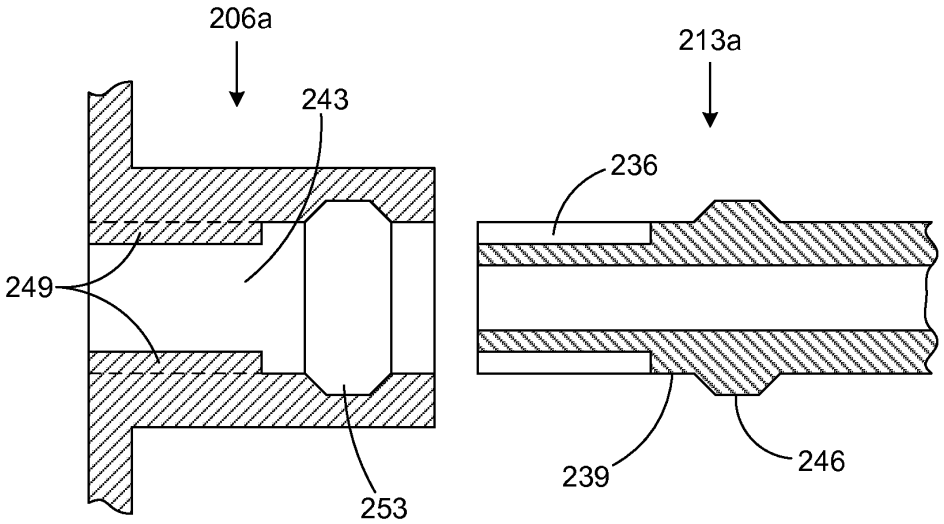
206a
243
213a
236
249
239
246
253

FIG. 5B

233

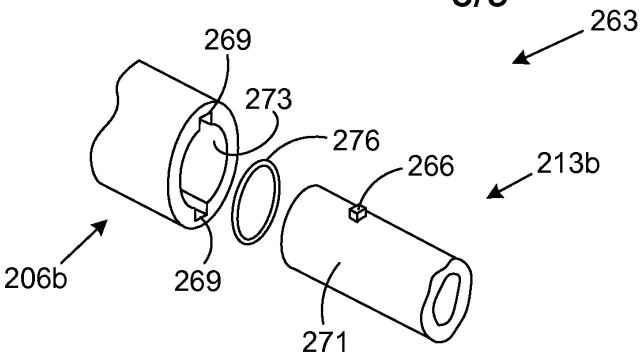

FIG. 6A

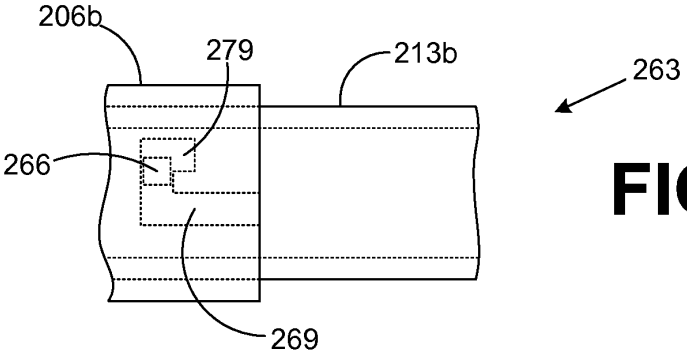

FIG. 6B

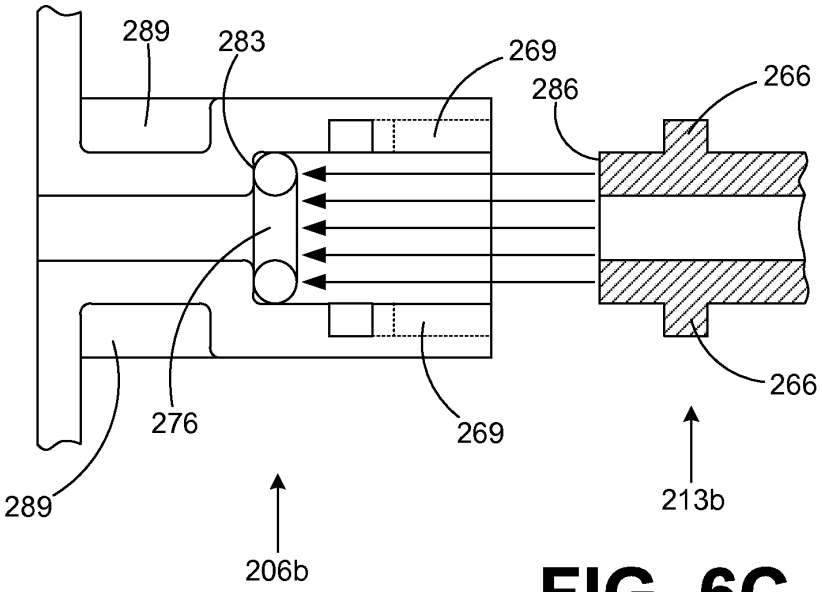

FIG. 6C

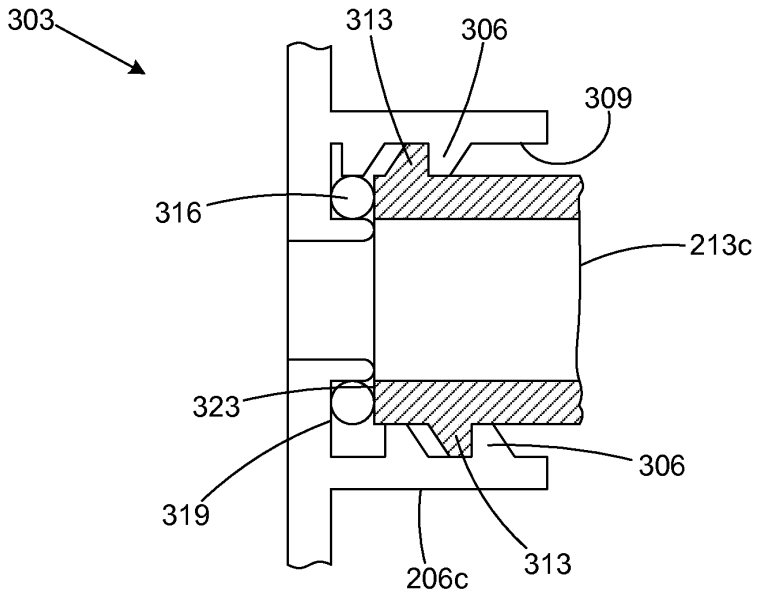

FIG. 7

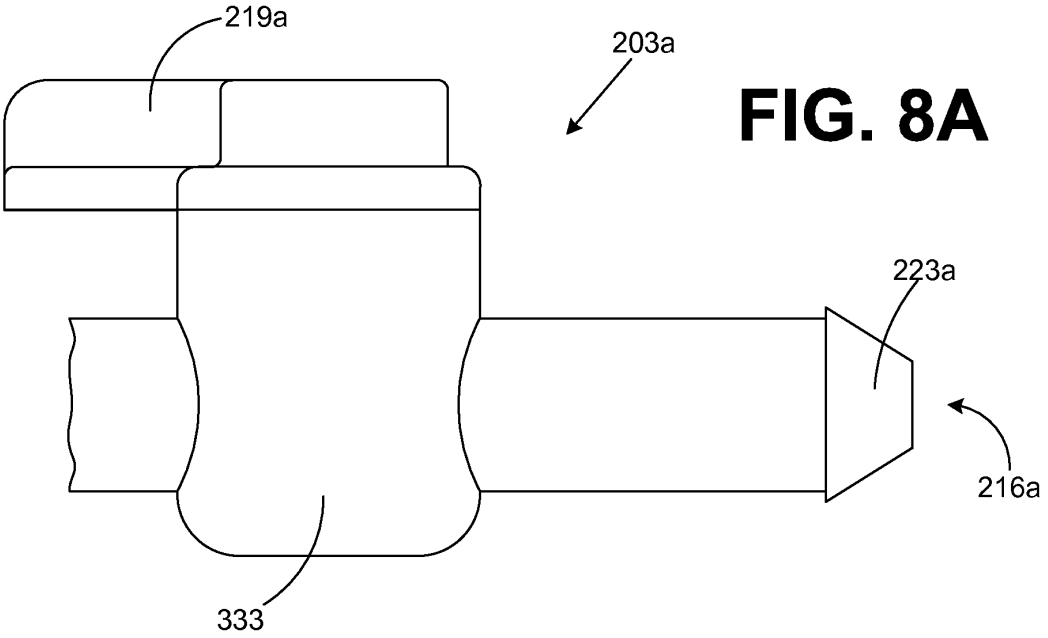

FIG. 8A

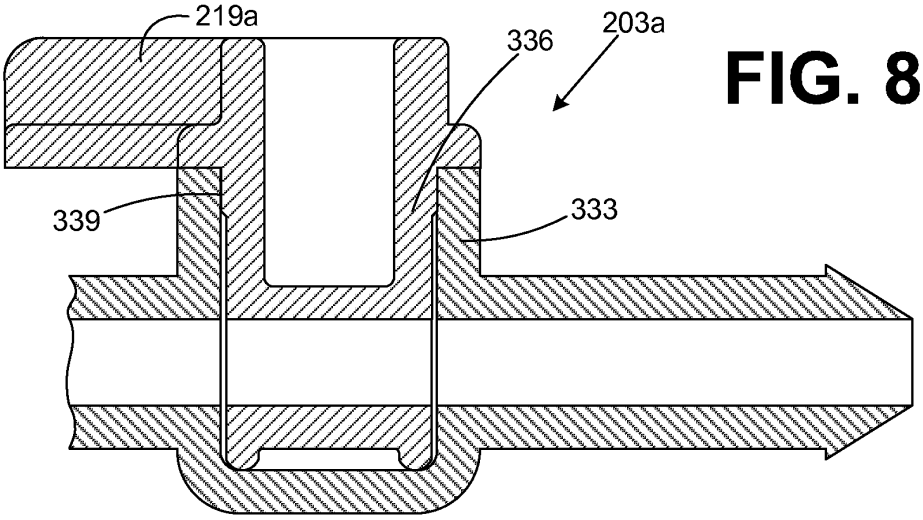

FIG. 8B

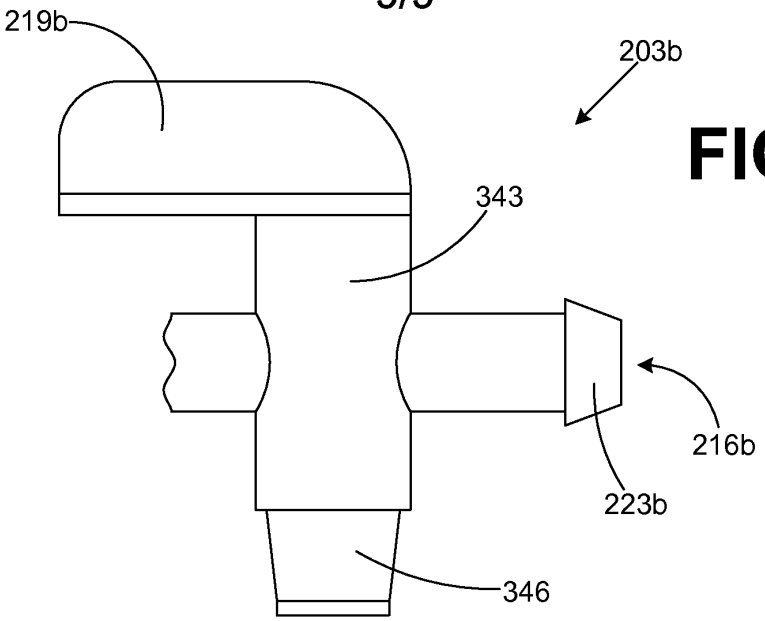

FIG. 9A

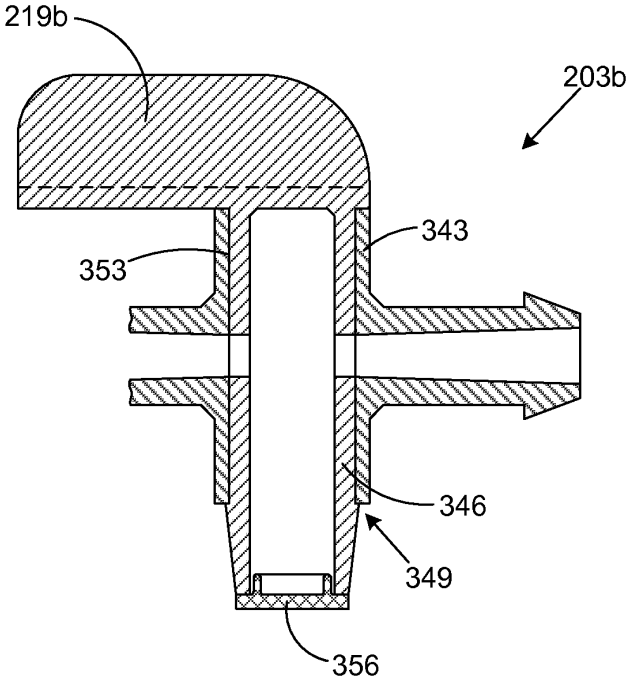

FIG. 9B

Under the Paperwork Reduction Act of 1995, no persons are required to respond to a collection of information unless it contains a valid OMB control number.

Application Data Sheet 37 CFR 1.76	Attorney Docket Number	171901-1033
	Application Number	
Title of Invention	Toilet Fill Valve with Adjustable Bowl Fill Flow	

The application data sheet is part of the provisional or nonprovisional application for which it is being submitted. The following form contains the bibliographic data arranged in a format specified by the United States Patent and Trademark Office as outlined in 37 CFR 1.76.
This document may be completed electronically and submitted to the Office in electronic format using the Electronic Filing System (EFS) or the document may be printed and included in a paper filed application.

Secrecy Order 37 CFR 5.2

☐ Portions or all of the application associated with this Application Data Sheet may fall under a Secrecy Order pursuant to 37 CFR 5.2 (Paper filers only. Applications that fall under Secrecy Order may not be filed electronically.)

Applicant Information:

Applicant 1 Remove

Applicant Authority ◉ Inventor ◯ Legal Representative under 35 U.S.C. 117 ◯ Party of Interest under 35 U.S.C. 118

Prefix	Given Name	Middle Name	Family Name	Suffix
	Michael	J.	Schuster	

Residence Information (Select One) ◉ US Residency ◯ Non US Residency ◯ Active US Military Service

City	Joliet	State/Province	IL	Country of Residence i	US

Citizenship under 37 CFR 1.41(b) i US

Mailing Address of Applicant:

Address 1	612 Nicholson Street		
Address 2			
City	Joliet	State/Province	IL
Postal Code	60435	Country i	US

Applicant 2 Remove

Applicant Authority ◉ Inventor ◯ Legal Representative under 35 U.S.C. 117 ◯ Party of Interest under 35 U.S.C. 118

Prefix	Given Name	Middle Name	Family Name	Suffix
	Larry		Schneider	

Residence Information (Select One) ◉ US Residency ◯ Non US Residency ◯ Active US Military Service

City	Wadsworth	State/Province	IL	Country of Residence i	US

Citizenship under 37 CFR 1.41(b) i US

Mailing Address of Applicant:

Address 1	39155 N. Pine Grove Avenue		
Address 2			
City	Wadsworth	State/Province	IL
Postal Code	60083	Country i	US

All Inventors Must Be Listed - Additional Inventor Information blocks may be generated within this form by selecting the **Add** button. Add

Correspondence Information:

Enter either Customer Number or complete the Correspondence Information section below.
For further information see 37 CFR 1.33(a).

PTO/SB/14 (07-07)
Approved for use through 06/30/2010. OMB 0651-0032
U.S. Patent and Trademark Office; U.S. DEPARTMENT OF COMMERCE
Under the Paperwork Reduction Act of 1995, no persons are required to respond to a collection of information unless it contains a valid OMB control number.

Application Data Sheet 37 CFR 1.76	Attorney Docket Number	171901-1033
	Application Number	
Title of Invention	Toilet Fill Valve with Adjustable Bowl Fill Flow	

☐ **An Address is being provided for the correspondence Information of this application.**			
Customer Number	24504		
Email Address	mike.daurelio@tkhr.com	Add Email	Remove Email

Application Information:

Title of the Invention	Toilet Fill Valve with Adjustable Bowl Fill Flow		
Attorney Docket Number	171901-1033	**Small Entity Status Claimed**	☒
Application Type	Nonprovisional		
Subject Matter	Utility		
Suggested Class (if any)		**Sub Class (if any)**	
Suggested Technology Center (if any)			
Total Number of Drawing Sheets (if any)	9	**Suggested Figure for Publication (if any)**	

Publication Information:

☐	Request Early Publication (Fee required at time of Request 37 CFR 1.219)
☒	**Request Not to Publish.** I hereby request that the attached application not be published under 35 U.S.C. 122(b) and certify that the invention disclosed in the attached application **has not and will not** be the subject of an application filed in another country, or under a multilateral international agreement, that requires publication at eighteen months after filing.

Representative Information:

Representative information should be provided for all practitioners having a power of attorney in the application. Providing this information in the Application Data Sheet does not constitute a power of attorney in the application (see 37 CFR 1.32). Enter either Customer Number or complete the Representative Name section below. If both sections are completed the Customer Number will be used for the Representative Information during processing.

Please Select One:	◉ Customer Number	○ US Patent Practitioner	○ Limited Recognition (37 CFR 11.9)
Customer Number	24504		

Domestic Benefit/National Stage Information:

This section allows for the applicant to either claim benefit under 35 U.S.C. 119(e), 120, 121, or 365(c) or indicate National Stage entry from a PCT application. Providing this information in the application data sheet constitutes the specific reference required by 35 U.S.C. 119(e) or 120, and 37 CFR 1.78(a)(2) or CFR 1.78(a)(4), and need not otherwise be made part of the specification.

Prior Application Status	Pending		Remove
Application Number	Continuity Type	Prior Application Number	Filing Date (YYYY-MM-DD)
	Continuation of	12786904	2010-05-25
Prior Application Status	Patented		Remove

Under the Paperwork Reduction Act of 1995, no persons are required to respond to a collection of information unless it contains a valid OMB control number.

Application Data Sheet 37 CFR 1.76	Attorney Docket Number	171901-1033
	Application Number	
Title of Invention	Toilet Fill Valve with Adjustable Bowl Fill Flow	

Application Number	Continuity Type	Prior Application Number	Filing Date (YYYY-MM-DD)	Patent Number	Issue Date (YYYY-MM-DD)
12786904	Continuation of	10958797	2004-10-05	7743436	2010-06-29
Prior Application Status	Patented			Remove	
Application Number	Continuity Type	Prior Application Number	Filing Date (YYYY-MM-DD)	Patent Number	Issue Date (YYYY-MM-DD)
10958797	Continuation in part of	10798606	2004-03-11	6823889	2004-11-30
Additional Domestic Benefit/National Stage Data may be generated within this form by selecting the **Add** button.					Add

Foreign Priority Information:

This section allows for the applicant to claim benefit of foreign priority and to identify any prior foreign application for which priority is not claimed. Providing this information in the application data sheet constitutes the claim for priority as required by 35 U.S.C. 119(b) and 37 CFR 1.55(a).

Remove

Application Number	Country [i]	Parent Filing Date (YYYY-MM-DD)	Priority Claimed
			○ Yes ◉ No

Additional Foreign Priority Data may be generated within this form by selecting the **Add** button. Add

Assignee Information:

Providing this information in the application data sheet does not substitute for compliance with any requirement of part 3 of Title 37 of the CFR to have an assignment recorded in the Office.

Assignee 1 Remove

If the Assignee is an Organization check here. ☒

Organization Name	MJSI, Inc.		
Mailing Address Information:			
Address 1	205 Earl Rd		
Address 2			
City	Shorewood	**State/Province**	IL
Country [i]	US	Postal Code	60404
Phone Number		Fax Number	
Email Address			

Additional Assignee Data may be generated within this form by selecting the **Add** button. Add

Signature:

A signature of the applicant or representative is required in accordance with 37 CFR 1.33 and 10.18. Please see 37 CFR 1.4(d) for the form of the signature.

Signature	/Robert D. Gravois/			Date (YYYY-MM-DD)	2012-01-09
First Name	Robert D.	Last Name	Gravois	Registration Number	67224

PTO/SB/14 (07-07)
Approved for use through 06/30/2010. OMB 0651-0032
U.S. Patent and Trademark Office; U.S. DEPARTMENT OF COMMERCE
Under the Paperwork Reduction Act of 1995, no persons are required to respond to a collection of information unless it contains a valid OMB control number.

Application Data Sheet 37 CFR 1.76	Attorney Docket Number	171901-1033
	Application Number	
Title of Invention	Toilet Fill Valve with Adjustable Bowl Fill Flow	

This collection of information is required by 37 CFR 1.76. The information is required to obtain or retain a benefit by the public which is to file (and by the USPTO to process) an application. Confidentiality is governed by 35 U.S.C. 122 and 37 CFR 1.14. This collection is estimated to take 23 minutes to complete, including gathering, preparing, and submitting the completed application data sheet form to the USPTO. Time will vary depending upon the individual case. Any comments on the amount of time you require to complete this form and/or suggestions for reducing this burden, should be sent to the Chief Information Officer, U.S. Patent and Trademark Office, U.S. Department of Commerce, P.O. Box 1450, Alexandria, VA 22313-1450. DO NOT SEND FEES OR COMPLETED FORMS TO THIS ADDRESS. **SEND TO: Commissioner for Patents, P.O. Box 1450, Alexandria, VA 22313-1450.**

Privacy Act Statement

The Privacy Act of 1974 (P.L. 93-579) requires that you be given certain information in connection with your submission of the attached form related to a patent application or patent. Accordingly, pursuant to the requirements of the Act, please be advised that: (1) the general authority for the collection of this information is 35 U.S.C. 2(b)(2); (2) furnishing of the information solicited is voluntary; and (3) the principal purpose for which the information is used by the U.S. Patent and Trademark Office is to process and/or examine your submission related to a patent application or patent. If you do not furnish the requested information, the U.S. Patent and Trademark Office may not be able to process and/or examine your submission, which may result in termination of proceedings or abandonment of the application or expiration of the patent.

The information provided by you in this form will be subject to the following routine uses:

1. The information on this form will be treated confidentially to the extent allowed under the Freedom of Information Act (5 U.S.C. 552) and the Privacy Act (5 U.S.C. 552a). Records from this system of records may be disclosed to the Department of Justice to determine whether the Freedom of Information Act requires disclosure of these records.

2. A record from this system of records may be disclosed, as a routine use, in the course of presenting evidence to a court, magistrate, or administrative tribunal, including disclosures to opposing counsel in the course of settlement negotiations.

3. A record in this system of records may be disclosed, as a routine use, to a Member of Congress submitting a request involving an individual, to whom the record pertains, when the individual has requested assistance from the Member with respect to the subject matter of the record.

4. A record in this system of records may be disclosed, as a routine use, to a contractor of the Agency having need for the information in order to perform a contract. Recipients of information shall be required to comply with the requirements of the Privacy Act of 1974, as amended, pursuant to 5 U.S.C. 552a(m).

5. A record related to an International Application filed under the Patent Cooperation Treaty in this system of records may be disclosed, as a routine use, to the International Bureau of the World Intellectual Property Organization, pursuant to the Patent Cooperation Treaty.

6. A record in this system of records may be disclosed, as a routine use, to another federal agency for purposes of National Security review (35 U.S.C. 181) and for review pursuant to the Atomic Energy Act (42 U.S.C. 218(c)).

7. A record from this system of records may be disclosed, as a routine use, to the Administrator, General Services, or his/her designee, during an inspection of records conducted by GSA as part of that agency's responsibility to recommend improvements in records management practices and programs, under authority of 44 U.S.C. 2904 and 2906. Such disclosure shall be made in accordance with the GSA regulations governing inspection of records for this purpose, and any other relevant (i.e., GSA or Commerce) directive. Such disclosure shall not be used to make determinations about individuals.

8. A record from this system of records may be disclosed, as a routine use, to the public after either publication of the application pursuant to 35 U.S.C. 122(b) or issuance of a patent pursuant to 35 U.S.C. 151. Further, a record may be disclosed, subject to the limitations of 37 CFR 1.14, as a routine use, to the public if the record was filed in an application which became abandoned or in which the proceedings were terminated and which application is referenced by either a published application, an application open to public inspections or an issued patent.

9. A record from this system of records may be disclosed, as a routine use, to a Federal, State, or local law enforcement agency, if the USPTO becomes aware of a violation or potential violation of law or regulation.

Docket Number: 1008-100501

ASSIGNMENT

For good and valuable consideration received of the hereinafter named assignee, receipt of which is hereby acknowledged, the undersigned

Michael J. Schuster
612 Nicholson Street
Joliet, Illinois 60435

and

Larry Schneider
39155 N. Pine Grove Ave.
Wadsworth, Illinois 60083

hereby sell and assign to MJSI, Inc., a corporation of the State of Illinois, having a place of business at 612 Nicholson Street, Suite 115, Joliet, Illinois 60435, U.S.A., its successors and assigns, the entire right, title and interest, so far as concerns the United States and the Territories and Possessions thereof and all foreign countries, in and to the inventions entitled

TOILET FILL VALVE WITH ADJUSTABLE BOWL FILL FLOW

for which application for United States Letters Patent has been filed on 10/05/2004 under Serial Number 10/958,797, or was executed by the undersigned on the date below and is being filed concurrently herewith, said application for United States Letters Patent, any and all other applications for Letters Patent on said inventions in countries foreign to the United States, including all divisional, renewal, substitute, continuation and Convention applications based in whole or in part upon said inventions or upon said applications, and any and all Letters Patent and reissues and extensions of Letters Patent granted for said inventions or upon said applications, and every priority right that is or may be predicated upon or arise from said inventions, said applications and said Letters Patent; said assignee being hereby authorized to file patent applications in any or all countries on any or all said inventions in the name of the undersigned or in the name of said assignee or otherwise as said assignee may deem advisable, under the International Convention or otherwise; the Commissioner for Patents of the United States of America and the empowered officials of all other governments being hereby authorized to issue or transfer all said Letters Patent to said assignee in accordance herewith; this assignment being under covenant, not only that full power to make the same is had by the undersigned, but also that such assigned right is not encumbered by any grant, license, or other right heretofore given, and that the undersigned will do all acts reasonably serving to assure that said inventions, patent applications and Letters Patent shall be held and enjoyed by said assignee as fully and entirely as the same could have been held and enjoyed by the undersigned if this assignment had not been made, and particularly to execute and deliver to said assignee all lawful documents including petitions, specifications, oaths, assignments, invention disclaimers, and lawful affidavits in form and substance which may be requested by said assignee, to furnish said assignee with all facts relating to said inventions or the history thereof and any and all documents, photographs, models, samples or other physical exhibits which may be useful for establishing the facts of conception, disclosure and reduction to practice of said inventions, and to testify in any proceedings relating to said inventions, patent applications and Letters Patent.

The undersigned hereby authorize and request our attorneys of record to insert in the spaces indicated above, the serial number and filing date of the above-identified application for United States Letters Patent now identified by the attorney docket number and title set forth above, as soon as said serial number and filing date shall have been made known to them by the United States Patent and Trademark Office.

Docket Number: 1008-100501

Signed: Michael J. Schuster

Michael J. Schuster

Date: 9-27-04

CERTIFICATE OF ACKNOWLEDGMENT

State of Illinois

County of Will

On 9-27-04 before me, Heather R. Cheney, Notary
Name and Title of Officer (e.g., "Jane Doe, Notary Public")

personally appeared Michael J Schuster
Name(s) of Signer(s)

☒ personally known to me - OR - ☐ proved to me on the basis of satisfactory evidence to be the person(s) whose name(s) is/are subscribed to the within instrument and acknowledged to me that he/she/they executed the same in his/her/their authorized capacity(ies), and that by his/her/their signature(s) on the instrument the person(s), or the entity upon behalf of which the person(s) acted, executed the instrument.

WITNESS my hand and official seal.

Heather R. Cheney
Signature of Notary Public

"OFFICIAL SEAL"
Heather R. Cheney
Notary Public, State of Illinois
My Commission Exp. 07/10/2005

Docket Number: 1008-100501

Signed: Larry Schneider

Date: 9/23/04

CERTIFICATE OF ACKNOWLEDGMENT

State of Illinois

County of Lake

On 9/23/04 before me, Lorna F. Hawk, Notary Public
(Name and Title of Officer (e.g., "Jane Doe, Notary Public")

personally appeared Larry Schneider
(Name(s) of Signer(s))

☒ personally known to me - OR - ☐ proved to me on the basis of satisfactory evidence to be the person(s) whose name(s) is/are subscribed to the within instrument and acknowledged to me that he/she/they executed the same in his/her/their authorized capacity(ies), and that by his/her/their signature(s) on the instrument the person(s), or the entity upon behalf of which the person(s) acted, executed the instrument.

WITNESS my hand and official seal.

Lorna F. Hawk
Signature of Notary Public

"OFFICIAL SEAL"
Lorna F. Hawk
Notary Public, State of Illinois
My Commission Expires 12/4/2004

TOILET FILL VALVE WITH ADJUSTABLE BOWL FILL FLOW

CROSS REFERENCE TO RELATED APPLICATIONS

[0001] The present patent application is a Continuation Application of, and claims priority to, U.S. Patent Application entitled “Toilet Fill Valve with Adjustable Bowl Fill Flow” filed on May 25, 2010 and assigned Serial Number 12/786,904, which is a Continuation Application of, and claims priority to, U.S. Patent 7,743,436 entitled “Toilet Fill Valve with Adjustable Bowl Fill Flow” filed on October 5, 2004, which is a Continuation-in-Part Application of, and claims priority to, U.S. Patent 6,823,889 entitled "Toilet Fill Valve with Adjustable Bowl Fill Flow" filed on March 11, 2004.

BACKGROUND

[0002] A toilet fill valve in a toilet typically includes a water outlet that provides water for refilling a toilet bowl during a flush cycle. Unfortunately, the water flowing out of such conventional water outlets to fill a toilet bowl provide much more water than is necessary to fill the average toilet bowl. Consequently, much of the water that flows into a toilet bowl during the average flush cycle is lost down the drain. This translates into a loss of millions of gallons of water each year.

BRIEF DESCRIPTION OF THE SEVERAL VIEWS OF THE DRAWINGS

[0003] The invention can be understood with reference to the following drawings. The components in the drawings are not necessarily to scale. Also, in the drawings, like reference numerals designate corresponding parts throughout the several views.

[0004] FIG. 1 is a drawing of a side view of a toilet fill valve according to an embodiment of the present invention;

[0005] FIG. 2 is a drawing of a top view of the toilet fill valve of FIG. 1;

[0006] FIG. 3 is a drawing of a cutaway view of a toilet tank within which the toilet fill valve of FIG. 1 is installed;

[0007] FIG. 4 is a drawing of a side view of a toilet fill valve according to an embodiment of the present invention;

[0008] FIGS. 5A and 5B are drawings that illustrate one example of a coupling of a bowl fill valve to the toilet fill valve of FIG. 4 according to an embodiment of the present invention;

[0009] FIGS. 6A, 6B, and 6C are drawings that illustrate another example of a coupling of a bowl fill valve to the toilet fill valve of FIG. 4 according to an embodiment of the present invention;

[0010] FIG. 7 is a drawing that illustrates still another example of a coupling of a bowl fill valve to the toilet fill valve of FIG. 4 according to an embodiment of the present invention;

[0011] FIGS. 8A and 8B are drawings that illustrate an example of a bowl fill valve that is coupled to the toilet fill valve of FIG. 4 according to an embodiment of the present invention; and

[0012] FIGS. 9A and 9B are drawings that illustrate another example of a bowl fill valve that is coupled to the toilet fill valve of FIG. 4 according to an embodiment of the present invention.

DETAILED DESCRIPTION

[0013] With reference to FIG. 1, shown is a toilet fill valve 100 according to an embodiment of the present invention. The toilet fill valve 100 includes a water inlet 103 at the bottom of the toilet fill valve 100 that is configured to be coupled to a water source outside of a toilet tank within which the toilet fill valve 100 is installed. The toilet fill valve 100 includes one or more water outlets 106 that are configured to supply water into a toilet tank within which the toilet fill valve 100 is installed. The toilet fill valve 100 may be, for example, a pilot style fill valve. However, it is understood that the toilet fill valve 100 may be any style of fill valve such as, for example, a ballcock valve, *etc*. The toilet fill valve 100 also includes a bowl fill valve 109 according to an

embodiment of the present invention. The bowl fill valve 109 includes a bowl fill valve inlet 113 and a bowl fill valve outlet 116. In addition, the bowl fill valve 109 includes a handle 119 that facilitates a manual adjustment of the bowl fill valve 109.

[0014] The bowl fill valve 109 is integral with the toilet fill valve 100. In this respect, the term “integral” refers to the fact that the bowl fill valve 109 and the toilet fill valve 100 comprise a single structure. In this respect, the bowl fill valve 109 may be included within the body of the toilet fill valve 100 as a portion of the toilet fill valve 100 in a single piece construction. Specifically, the bowl fill valve 109 may be molded as a portion of the toilet fill valve 100 or it may be snapped or clamped into place, or it may be attached to the toilet fill valve 100 in some other manner, etc.

[0015] Within the toilet fill valve 100, the bowl fill valve inlet 113 is operatively coupled to the water inlet 103. In this respect, when the toilet fill valve 100 is open and water flows from the water inlet 103 to the water outlets 106 and into a toilet tank, an amount of water is also supplied to the bowl fill valve inlet 113 that flows through the bowl fill valve 109 and out the bowl fill valve outlet 116. By virtue of the manual setting of the handle 119 of the bowl fill valve 109, the flow of water through the bowl fill valve 109 is regulated. In this manner, the flow of water is regulated so that enough water flows out of the bowl fill valve 109 to fill a toilet bowl without wasting any water down a drain.

[0016] Thus, the bowl fill valve 109 is configured to supply an adjustable flow of water out of the bowl fill outlet 116 that is directed to a toilet bowl during a flush cycle of a toilet to fill the toilet bowl. The flow of water is adjusted so that just enough flows out of bowl fill valve 109 so as to fill the toilet bowl without wasting any water.

[0017] The toilet fill valve 100 includes a float 123 that is operatively coupled to an actuating arm (not shown) by a translating stem 126. The float 123 floats on the water within a toilet tank and, depending on the location of the float 123 along the toilet fill valve 100, the toilet fill valve 100 is open or closed as can be appreciated by those with ordinary skill in the art. The bowl fill valve 109 and the actuating arm (not shown) are each located on the toilet fill valve 100 so as to prevent any interference between the bowl fill valve 109 and the translational stem 126 or the actuating arm as will be discussed.

[0018] According to an embodiment of the present invention, the bowl fill valve 109 may include a number of biased positions. In this respect, the movement of the handle 119 may cause the bowl fill valve 109 to move from one predefined biased position to other predefined biased positions. In this respect, various mechanisms such as tabs, snaps, or other position biasing structures may be employed. The biased positions of the bowl fill valve 109 help ensure that the bowl fill valve 109 remains in a given setting selected by a user by a manual manipulation of the handle 119 during the normal course of operation of the toilet fill valve 100. Thus, by virtue of the biased positions, the bowl fill valve 109 is prevented from moving out of a desired position set by a user over a long period of use due to vibration and other factors as can be appreciated by those with ordinary skill in the art.

[0019] The bowl fill valve 109 may be, for example, a ball valve, a gate valve, a globe valve, a plug valve, a diaphragm valve, a butterfly valve, a needle valve, a sliding gate, a quick turn valve, a knife valve or any other appropriate type of valve as can be appreciated by those with ordinary skill in the art.

[0020] To operate the toilet fill valve 100, the toilet fill valve 100 is first installed within a toilet tank. When a toilet is flushed and the tank is drained, the float 123 moves downward along the toilet fill valve 100 and, consequently, the toilet fill valve 100 opens to allow water to flow from the water inlet 103 and out the water outlets 106 into a toilet tank. At the same time, water flows into the bowl fill valve inlet 113 and out the bowl fill valve outlet 116 through the bowl fill valve 109. Based on the setting of the handle 119, the bowl fill valve 109 determines the precise flow rate of the water that flows out the bowl fill valve outlet 116. A tube is typically employed to direct the water flowing out the bowl fill valve outlet 116 to an overflow tube in the toilet tank. In this respect, the water flowing out the bowl fill valve outlet 116 refills the toilet bowl of the respective toilet.

[0021] Referring next to FIG. 2, shown is a top view of the toilet fill valve 100 according to an embodiment of the present invention. In this respect, the actuating arm 129 of the bowl fill valve 100 is seen with respect to the bowl fill valve 109. The actuating arm 129 is coupled to the float by way of the translational stem 126 (FIG. 1). In this respect, the actuating arm 129 extends in an orthogonal direction relative to a

longitudinal axis 133 of the toilet fill valve 100. The longitudinal axis 133 is centered in the toilet fill valve 100 along the length of the toilet fill valve 100. Also, the bowl fill valve 109 extends in an orthogonal direction relative to the longitudinal axis 133 of the toilet fill valve 100. In order to prevent interference between the bowl fill valve 109 and the translational stem 126 or the actuating arm 129, the actuating arm 129 is angularly offset relative to the bowl fill valve 109 as shown. In this respect, the translational stem 126 is coupled to the free end of the actuating arm 129. By virtue of the angular offset between the bowl fill valve 109 and the actuating arm 129, the operation of the bowl fill valve 109 does not interfere with the operation of the toilet fill valve 100 itself by virtue of the fact that the float 123 (FIG. 1) can move freely with the movement of the translational stem 126 in order for proper operation of the toilet fill valve 100.

[0022] With reference to FIG. 3, shown is the toilet fill valve 100 as installed within a toilet tank 143 according to an embodiment of the present invention. In this respect, the toilet fill valve 100 includes the water inlet 103 that is coupled to a water source outside of the toilet tank 143. The toilet fill valve 100 also includes one or more water outlets 106 that direct a flow of water into the toilet tank 143 during the operation of a flush cycle. The bowl fill valve 109 includes the bowl fill valve inlet (not shown) and the bowl fill valve outlet 116, where the bowl fill valve inlet is operatively coupled to the water inlet 103 as described above. Also, the bowl fill valve 109 is integrated with the body of the toilet fill valve 100 as described above.

[0023] A tube 146 is coupled to the bowl fill valve outlet 116 and is directed into the overflow tube 149 of the toilet tank 143. The tube 146 directs water that flows out of the bowl fill valve outlet 116 into the overflow tube 149 and refills the toilet bowl associated with the toilet tank 143 as can be appreciated by those with ordinary skill in the art. The bowl fill valve 109 is configured to supply the adjustable flow of water out the bowl fill valve outlet through the tube 146 and into the overflow tube 149 for filling the toilet bowl during the flush cycle of the toilet. In this respect, no pressure is seen within the tube 146. Specifically, the fact that the bowl fill valve 109 is integral with the toilet fill valve 100 prevents the creation of a pressure head in the tube 146 as would be the case if the bowl fill valve 109 were included in the middle of the tube 146. The

fact that a pressure head is not created in any portion of the tube 146 prevents the tube 146 from working its way off of the bowl fill valve outlet 116 over time.

[0024] When installed, the bowl fill valve 109 is calibrated for the particular flush cycle of the toilet within which the toilet fill valve 100 is installed. To calibrate the bowl fill valve 109, a user first determines the water level in the toilet bowl when the toilet bowl is full of water. This gives the user a starting and an ending point for determining when the toilet bowl of the respective toilet is full. Next, the bowl fill valve handle 109 is adjusted so that the bowl fill valve 109 is placed in a predefined position that allows a predefined flow of water to refill the toilet bowl. In this manner, one adjusts the actual flow of water that refills the toilet bowl. Thereafter, the user flushes the toilet itself. Next, the user determines if the flow of water into the toilet bowl by virtue of the adjustments made to the bowl fill valve 109 is adequate to refill the toilet bowl during the flush cycle. This may be determined, by identifying whether the level of the water in the toilet bowl reaches the full level determined at the beginning of the bowl fill valve calibration above.

[0025] The flow of water from the bowl fill valve 109 should be set so as to ensure that the water level in the toilet bowl reaches the full level at about the same time that the flush cycle ends. In other words, the level of water in the toilet bowl should reach its highest level at the same time that the flush cycle ends. This prevents any water from being lost down the drain associated with the toilet.

[0026] If the amount of water that flows into the toilet bowl is inadequate to refill the toilet bowl during the flush cycle as described above, then one should repeat the steps of adjusting the bowl fill valve, flushing the toilet, and then once again determining if the flow of water into the toilet bowl is adequate to refill the toilet bowl during a flush cycle.

[0027] Ultimately, during use of the toilet that includes the toilet fill valve 100 and the toilet tank 143, a user flushes the toilet and a predetermined flow of water exits the bowl fill valve outlet 116 and is directed into the toilet bowl. After the toilet tank has drained during the flush cycle, a flapper closes in the toilet tank and the toilet tank refills. During the refilling of the tank, the water supplied by the bowl fill valve 109 fills the toilet bowl itself. The amount of water supplied by the bowl fill valve in the time

it takes to refill the toilet tank should be approximately equal to the amount of water needed to fill the toilet bowl. By virtue of the fact that the bowl fill valve 100 is integrated within the toilet fill valve 100, a pressure head is prevented from being created due to any potential pinching of the tube 146 or other similar adjustment mechanism.

[0028] With reference to FIG. 4, shown is a toilet fill valve 200 according to another embodiment of the present invention. The toilet fill valve 200 includes the same water inlet 103 and the water outlets 106 as the toilet fill valve 100 (FIG. 1). The toilet fill valve 200 also includes the float 123 and the translational stem 126 as was described with reference to the toilet fill valve 100. In addition, the toilet fill valve 200 includes a bowl fill valve 203 that is integral with the toilet fill valve 200 as will be described. As stated above, the term “integral” refers to the fact that the bowl fill valve 200 and the toilet fill valve 100 comprise a single structure. In this embodiment, the bowl fill valve 200 is a separate component that is attached the body of the toilet fill valve 100, thereby forming the integral, single structure.

[0029] The toilet fill valve 200 also includes a bowl fill outlet port 206 that radially extends from a portion of a body 209 of the toilet fill valve 200. In this respect, the bowl fill outlet port is operatively coupled to the water inlet 103. In particular, when the toilet fill valve 200 is in an “on” state, water that flows in the water inlet 103 flows out of both the water outlets 106 and the bowl fill outlet port 206. The water flowing out of the bowl fill outlet port 206 flows through the bowl fill valve 203 as will be described.

[0030] The bowl fill valve 203 includes a bowl fill valve inlet port 213 and a bowl fill valve outlet port 216. The bowl fill valve inlet port 213 is compatible with the bowl fill outlet port 206, where the bowl fill valve inlet port 213 is coupled to the bowl fill outlet port 206 when the bowl fill valve 203 is coupled or affixed to the toilet fill valve 200. The bowl fill valve inlet port 213 is compatible with the bowl fill outlet port 206 in the sense that both the bowl fill valve inlet port 213 and the bowl fill outlet port 206 comprise various structures that couple together when the bowl fill valve 203 is connected to the bowl fill outlet port 206 as will be described. In particular, various embodiments of the coupling between the bowl fill valve inlet port 213 and the bowl fill outlet port 206 are described herein.

[0031] The bowl fill valve 203 also includes a handle that may be adjusted by hand to adjust a flow of water through the bowl fill valve 203 during a flush operation of a toilet in which the toilet fill valve 200 is installed. Typically, the handle 219 is initially adjusted to a desired position when the toilet fill valve 200 is installed and generally remains in such position for the continued operation of the toilet fill valve 200. During the life cycle of the bowl fill valve 203, it may be possible that the bowl fill valve 203 is adjusted to take into account various changes in the operation of the toilet fill valve 200 such as, for example, changes in pressure or other operational changes.

[0032] The bowl fill valve 203 also includes a nipple 223. The nipple 223 is adapted to mate with a tube that extends from the bowl fill valve outlet port 216 to the overfill tube 149 (FIG. 3) in a manner similar to that as shown in FIG. 3 with respect to the tube 146 (FIG. 3) that extends from the nipple 116 (FIG. 3) to the overflow tube 149 (FIG. 3). The bowl fill valve 203 extends beyond the bowl fill outlet port 206 in a radial direction with respect to the portion of the body 209 of the toilet fill valve 200.

[0033] In some embodiments, the bowl fill outlet port 206 may comprise a female receptacle and, correspondingly, the bowl fill valve inlet port 213 may comprise a male end compatible with the female receptacle. Alternatively, the bowl fill valve inlet port 213 may comprise a female receptacle and the bowl fill outlet port 206 may comprise a male end compatible with such female receptacle.

[0034] The toilet fill valve 200 further includes an actuating arm (not shown) that extends in a radial direction that is orthogonal relative to a longitudinal axis of the toilet fill valve 200 in a manner similar as that described with reference to the toilet fill valve 100 (FIG. 1). The longitudinal axis is defined as an axis that runs from the water inlet 103 through the body 209 of the toilet fill valve 200 and out the top of the toilet fill valve 200. In one embodiment, the bowl fill valve 203 extends radially in an orthogonal direction relative to such longitudinal axis of the toilet fill valve 200. Also, in one embodiment, the actuating arm is angularly offset relative to the bowl fill valve 203 to prevent interference between the bowl fill valve 203 and the translational stem 126 that extends from the float 123 to a free end of the actuating arm. This allows the float 123 to move up and down and to engage the actuating arm during the normal operation of the toilet fill valve 200 during various flush cycles.

[0035] In addition, the bowl fill valve 203 may be constructed with a number of biased positions that help prevent the bowl fill valve 203 from moving out of adjustment over time when the force of pressure develops therein. Also, the biased positions aid a user in actual adjustment of the bowl fill valve 203 as can be appreciated.

[0036] The toilet fill valve 200 provides an advantage in that the body 209 of the toilet fill valve 200 may be constructed with the bowl fill outlet port 206 using a molding process that is much less complex than attempting to mold the entire bowl fill valve 203 within the structure of the body 209 as a single molded construction as was described with reference to one embodiment of the toilet fill valve 100. In this regard, the bowl fill valve 203 may be constructed as a separate component to the body 209 of the toilet fill valve 200 and assembled for distribution to end users.

[0037] Due to the fact that the bowl fill valve 203 is affixed to the toilet fill valve 200 through the coupling of the bowl fill outlet port 206 with the bowl fill valve inlet port 213, then a pressure head that develops within the bowl fill valve 203 due to the adjustment of the handle 219 during operation of the toilet fill valve 200 will not cause the bowl fill valve 203 to fall off of the toilet fill valve 200. Thus, when the toilet fill valve 200 is installed in a toilet tank 143, a user may adjust the opening of the bowl fill valve 203 by adjusting the handle 219 until a desired flow of water flows out of the bowl fill valve outlet port 216 into a tube and into the overflow tube 149 of a toilet. This flow of water is typically established to refill a toilet bowl of a toilet. In this regard, the flow of the water into the overflow tube 149 that refills the toilet bowl during a toilet flush operation may be regulated or adjusted so as to minimize or eliminate the amount of water that is lost down the drain of a toilet due to over filling of the toilet bowl during a flush cycle of a toilet. In one embodiment, the bowl fill valve 203 is adjusted until the filling of the toilet bowl of the toilet coincides with the end of the flush cycle, thereby resulting in little or no loss of water.

[0038] Referring next to FIG. 5A, shown is a coupling 233 between one embodiment of the bowl fill outlet port 206, denoted herein as bowl fill outlet port 206a, and an embodiment of the bowl fill valve inlet port 213, denote herein as bowl fill valve inlet port 213a. The bowl fill valve inlet port 213a includes a slot 236 in a side

wall 239. The bowl fill outlet port 206a comprises a rib (not shown) that extends from a side wall 243 that is inserted into the slot 236 when the bowl fill inlet port 213a is inserted into the bowl fill outlet port 206a. The mating of the slot 236 with the rib prevents the rotation of the bowl fill valve 213a with respect to the bowl fill outlet port 206a when the bowl fill valve inlet port 213a is inserted into the bowl fill outlet port 206a. Alternatively, there may be a number of slots 236 in the side wall 239 of the bowl fill valve inlet port 213a and a corresponding number of ribs extending from the side wall 243 of the bowl fill outlet port 206a.

[0039] The bowl fill valve inlet port 213a also includes an annular protrusion 246 that extends from the side wall 239 of the bowl fill valve inlet port 213a. Correspondingly, an annular groove (not shown) in the side wall 243 of the bowl fill valve outlet port 206a is provided that mates up with the annular protrusion 246 when the bowl fill valve inlet port 213 is inserted into the bowl fill outlet port 206a. In this respect, the annular protrusion 246 is snap fit into the annular groove (not shown), thereby affixing the bowl fill valve 203a to the bowl fill valve outlet port 206a.

[0040] Turning then to FIG. 5B, shown is a cutaway view of the coupling 233 between the bowl fill outlet port 206a and the bowl fill valve inlet port 213a according to an embodiment of the present invention. In this respect, the bowl fill outlet port 206a is depicted with two ribs 249 extending from the side wall 243 within the bowl fill outlet port 206a. Also, the bowl fill outlet port 206a includes the annular groove 253 into which the annular protrusion 246 snaps when the bowl fill valve inlet port 213a is inserted into the bowl fill outlet port 206a. In this respect, the mating of the annular protrusion 246 with the annular groove 253 fixes the bowl fill valve 203 to the bowl fill outlet port 206a. In this respect, the bowl fill valve 203 becomes an integral portion of the toilet fill valve 200.

[0041] Also, the fit between the annular protrusion 246 is a snug fit that forms a seal between the bowl fill outlet port 206a and the bowl fill valve inlet port 213a that prevents the leakage of water from the coupling 233 during a flush cycle. Alternatively, a snug fit may occur between other mating surfaces of the bowl fill outlet port 206a and the bowl fill valve inlet port 213a that prevents leakage of water from the coupling 233.

[0042] With reference to FIGS. 5A and 5B, even though the slots 236 are depicted as being formed within the side wall 239 of the bowl fill valve inlet port 213 and the ribs 249 extend from the side wall 243 within the bowl fill outlet port 206, it is possible that this arrangement may be reversed where the slots 236 are formed in the side wall 243 of the bowl fill outlet port 206a and the ribs 249 extend from the side wall 239 of the bowl fill valve inlet port 213a. In addition, the annular groove 253 may be created in the side wall 239 of the bowl fill valve inlet port 213 and the annular projection 246 may extend inward from the side wall 243 within the bowl fill outlet port 206 in a reverse arrangement than that shown with reference to FIG. 5B.

[0043] Referring next to FIG. 6A, 6B, and 6C, shown is a coupling 263 between another embodiment of the bowl fill outlet port 206, denoted herein as bowl fill outlet port 206b, and another embodiment of the bowl fill valve inlet port 213, denoted herein as bowl fill valve inlet port 213b. The bowl fill valve inlet port 213b includes at least two locking ears 266 that mate with corresponding locking grooves 269 in the bowl fill outlet port 206b. In particular, the locking ears 266 extend from a side wall 271 of the bowl fill valve inlet port 213b. The locking grooves 269 are disposed in the side wall 273 of the bowl fill outlet port 206b. When the bowl fill valve 203 is inserted and twisted into the bowl fill outlet port 206b, each of the locking ears 266 is situated in a locking position of one of the locking grooves 269 as will be described. The coupling 263 further comprises a sealing ring 276 that may be, for example, a rubber O-ring or other type of sealing ring. The sealing ring 276 is compressed between an end of the bowl fill valve inlet port 213b and a seat within the bowl fill outlet port 206b as we described. While at least two locking ears 266 and corresponding locking grooves 269 are shown, it is possible that a design may be employed that comprises a single locking ear 266 and a single corresponding locking groove 269.

[0044] With reference to FIG. 6B, shown is a portion of the bowl fill valve inlet port 213b and the bowl fill outlet port 206b as the bowl fill valve inlet port 213b is inserted into the bowl fill outlet port 206b and is partially rotated such that the locking ears 266 are almost located in the locking positions 279. In this respect, each of the locking grooves 269 is a “J” formation. The J formation of the locking grooves 269 allows the locking ears 266 to slide down and around the partial loop of the J and seat

in the locking position 279 such that the sealing ring 276 exerts a force against the end of the bowl fill valve inlet port 213b, thereby pushing the locking ears 266 into the locking positions 279 of the locking grooves 269 and holding the locking ears 266 in place. This ensures that the bowl fill valve 203 remains coupled to the bowl fill outlet port 206b.

[0045] With reference to FIG. 6C, shown is a cutaway view of the coupling 263 between the bowl fill outlet port 206b and the bowl fill valve inlet port 213b. In this respect, the bowl fill valve inlet port 213b is inserted into the bowl fill outlet port 206b in a manner such that the locking ears 266 mate with the locking grooves 269. When the locking ears 266 reach the bottom of the "J" of the locking grooves 269, then the bowl fill valve 203 is rotated so that the locking ears 266 may be seated in the locking positions 279.

[0046] The sealing ring 276 is seated against a portion of the bowl fill outlet port 206b. In one embodiment, this portion is a seating face 283 of the bowl fill outlet port 206b. Also, a portion of the bowl fill valve inlet port 213b is mated against the sealing ring 276. In one embodiment, this portion of the bowl fill valve inlet port 213b is an end face 286 such that the sealing ring is clamped between the seating face 283 and the end face 286 when the bowl fill valve inlet port 213b is inserted fully into the bowl fill outlet port 206b. The clamping or compression of the sealing ring 276 pushes the locking ears 266 into the locking position 279 of the locking grooves 269 once the bowl fill valve 203 is rotated accordingly. In this respect, the compressive force of the sealing ring 276 helps keep the bowl fill valve inlet port 213b of the bowl fill valve 203 mated with the bowl fill outlet port 206b. Also, the sealing ring 276 forms a seal between the bowl fill outlet port 206b and the bowl fill valve inlet port 213b that prevents leakage of water from the coupling 263 between the bowl fill outlet port 206b and the bowl fill valve inlet port 213b.

[0047] The locking positions 279 of the locking grooves and the locking ears 266 are located such that when the bowl fill valve 203 is rotated thereby positioning the locking ears 266 in the locking positions 279, the bowl fill valve 203 is substantially upright. In addition, the bowl fill outlet port 206b includes structural ribs 289 that provide greater structural stability for the bowl fill outlet port 206b and its attachment to

the portion of the body 209 of the toilet fill valve 200 (FIG. 4). Alternatively, the bowl fill outlet port 206b may be attached without the structural ribs 289. In addition, it may be the case that the locking ears 266 extend inward from the side wall 273 of the bowl fill outlet port 206b and that the locking grooves 269 be situated within the side wall 271 of the bowl fill valve inlet port 213b.

[0048] Referring next to FIG. 7, shown is a cutaway view of a coupling 303 between a third embodiment of the bowl fill outlet port 206, denoted herein as bowl fill outlet port 206c and the bowl fill valve inlet port 213 denoted herein as bowl fill valve inlet port 213c. In this respect, the bowl fill outlet port 206c includes a first thread 306 disposed on a side wall 309 of the bowl fill outlet port 206c. A second thread 313 is disposed on a side wall of the bowl fill valve inlet port 213c that engages the first thread 306 disposed in the side wall of the bowl fill outlet port 206c. The bowl fill valve inlet port 213c is coupled to the bowl fill outlet port 206c by way of the first and second threads 306 and 313. Specifically, the bowl fill valve 203 may be screwed onto the bowl fill outlet port 206c by virtue of the threads 306 and 313. When the bowl fill valve inlet port 213c is screwed into the bowl fill valve outlet port 206c, a sealing ring 316 is clamped between portions of the bowl fill valve inlet port 213c and the bowl fill outlet port 206c such as a seating face 319 of the bowl fill outlet port 206c and an end face 323 of the bowl fill valve inlet port 213c. In this respect, a seal is formed between the bowl fill outlet port 206c and the bowl fill valve inlet port 213c. Alternatively, the threads 306 and 313 may be specified so as to form an adequate seal between the bowl fill valve outlet port 206c and the bowl fill valve inlet port 213c for purposes of preventing leakage. As an additional alternative, the seating face 319 and the end face 323 or other portions of the bowl fill valve inlet port 213c and the bowl fill outlet port 206c may be compressed together to form a seal to prevent leakage. Alternatively, the bowl fill outlet port 206c and the bowl fill valve inlet port 213c may be designed to include mating surfaces that perform a friction seal as can be appreciated.

[0049] Referring next to FIG. 8a, shown is one embodiment of the bowl fill valve 203, denoted herein as bowl fill valve 203a according to an embodiment of the present invention. The bowl fill valve 203a includes a handle 219a and a valve body 333. The

bowl fill valve 203a includes the bowl fill valve outlet port 216a and the bowl fill valve inlet port (not shown) the bowl fill outlet port 216a includes a nipple 223a.

[0050] Referring then to FIG. 8b, shown is a cutaway view of the bowl fill valve 203a according to an embodiment of the present invention. In this respect, the valve body 333 forms a cavity within which a valve 336 is inserted as shown. A line contact 339 is formed between surfaces of the valve body 333 and the valve 336 so as to both hold the valve 336 within the cavity that is formed by the valve body 333 and to form a seal between the valve body 333 and the valve 336 to prevent water leakage. As seen, the valve 336 is integrated with the handle 219a in a single piece construction, although multiple piece construction may be employed.

[0051] With reference to FIGS. 9a and 9b, shown is a second embodiment of the bowl fill valve 203, denoted herein as bowl fill valve 203b according to an embodiment of the present invention. The bowl fill valve 203b includes a valve body 343 within which is inserted a valve 346. The bowl fill valve 203b further comprises the bowl fill valve outlet port 216b and a bowl fill valve inlet port (not shown). The bowl fill valve outlet port 216b includes a nipple 223b. The bowl fill valve 203b further includes a handle 209b for manual adjustment of the bowl fill valve 203b.

[0052] Referring next to FIG. 9b, shown is a cutaway view of the bowl fill valve 203b according to an embodiment of the present invention. As shown, the valve 346 is inserted into the valve body 343. A snap fit 349 affixes the valve 346 within the valve body 343. A seal is formed by virtue of an interference fit 353 between a surface of the valve 346 and an inner surface of the valve body 343. The bottom of the cavity within the valve 346 is closed by a cap 356 that may be spin welded onto the valve 346 after the valve is inserted into the valve body 343.

[0053] In addition, referring back to FIG. 4, other types of couplings may be employed between the bowl fill outlet port 206 the bowl fill valve inlet port 213. For example, the bowl fill outlet port 206 the bowl fill valve inlet port 213 may be configured to facilitate a compression fitting there between. Also, other snap fit and sealing configurations may be employed beyond those specifically described herein.

[0054] Although the invention is shown and described with respect to certain embodiments, it is obvious that equivalents and modifications will occur to others

skilled in the art upon the reading and understanding of the specification. The present invention includes all such equivalents and modifications, and is limited only by the scope of the claims.

CLAIMS

What is claimed is:

1. A toilet fill valve, comprising:

a water inlet;

a first water outlet configured to supply water to a toilet tank;

a bowl fill outlet port radially extending from a portion of a body of the toilet fill valve, the bowl fill outlet port being operatively coupled to the water inlet, and the bowl fill outlet port comprising an integrally molded portion of the body of the toilet fill valve;

a bowl fill valve having a bowl fill valve inlet port and a bowl fill valve outlet port, wherein the bowl fill valve inlet port is compatible with the bowl fill outlet port and the bowl fill valve inlet port being coupled to the bowl fill outlet port and establishing direct contact between the bowl fill outlet port and the bowl fill valve inlet port, wherein the bowl fill valve inlet port and the bowl fill valve outlet port each comprise an integrally molded portion of the bowl fill valve;

the bowl fill valve being configured to supply an adjustable flow of water out the bowl fill valve outlet port for filling a toilet bowl during a flush cycle of a toilet; and

the bowl fill valve being affixed to the bowl fill outlet port by an annual protrusion being snap-fit into an annular groove.

2. The toilet fill valve of claim 1, wherein:

the annular protrusion extends from a first side wall of the bowl fill valve inlet port; and

the annular groove is in a second side wall of the bowl fill outlet port.

3. The toilet fill valve of claim 1, wherein:

the annular groove is in a first side wall of the bowl fill valve inlet port; and

the annular protrusion extends from a second side wall of the bowl fill outlet port.

4. The toilet fill valve of claim 1, wherein bowl fill valve extends beyond the bowl fill outlet port in a radial direction with respect to a portion of the body of the toilet fill valve.

5. The toilet fill valve of claim 1, further comprising:

a float;

an actuating arm coupled to the float, the actuating arm radially extending in an orthogonal direction relative to a longitudinal axis of the toilet fill valve; and

the bowl fill valve extending in an orthogonal direction relative to the longitudinal axis of the toilet fill valve, wherein the actuating arm is angularly offset relative to the bowl fill valve, thereby preventing an interference with the bowl fill valve and a translational stem extending from the float to a free end of the actuating arm.

6. The toilet fill valve of claim 1, wherein the bowl fill valve outlet port further comprises a nipple adapted to mate with an end of a tube.

7. The toilet fill valve of claim 1, wherein the bowl fill valve further comprises a number of biased positions.

8. The toilet fill valve of claim 1, further comprising:

a rib extending from a side wall of the bowl fill outlet port; and

a slot in a side wall of the bowl fill valve inlet port, the rib being inserted into the slot, thereby preventing rotation of the bowl fill valve with respect to the bowl fill outlet port.

9. The toilet fill valve of claim 1, further comprising:

a rib extending from a side wall of the bowl fill valve inlet port; and

a slot in a side wall of the bowl fill outlet port, the rib being inserted into the slot, thereby preventing rotation of the bowl fill valve with respect to the bowl fill outlet port.

10. A method for providing an adjustable bowl fill water flow in a toilet fill valve, comprising the steps of:

operatively coupling a bowl fill outlet port to a water inlet of the toilet fill valve;

radially extending the bowl fill outlet port from a portion of a body of the toilet fill valve; and

coupling a bowl fill valve inlet port of a bowl fill valve directly to the bowl fill outlet port by engaging an annular groove with an annular protrusion, wherein the bowl fill valve inlet port is affixed to the bowl fill outlet port via the annular groove and the annular protrusion, the bowl fill valve inlet port being compatible with the bowl fill outlet port, and the bowl fill valve being configured to provide for the adjustable bowl fill water flow out a bowl fill valve outlet port of the bowl fill valve for filling a toilet bowl during a flush cycle of a toilet.

11. The method of claim 10, wherein:

the annular groove is associated with the bowl fill outlet port; and

the annular protrusion is associated with the bowl fill valve inlet port.

12. The method of claim 10, wherein:

the annular protrusion is associated with the bowl fill outlet port; and

the annular groove is associated with the bowl fill valve inlet port.

13. The method of claim 10, wherein the step of coupling of the bowl fill valve inlet port of the bowl fill valve directly to the bowl fill outlet port further comprises the step of mating a rib with a groove, thereby preventing rotation of the bowl fill valve with respect to the bowl fill outlet port.

14. The method of claim 13, wherein:
the rib is associated with the bowl fill outlet port; and
the groove is associated with the bowl fill valve inlet port.

15. The method of claim 13, wherein:
the groove is associated with the bowl fill outlet port; and
the rib is associated with the bowl fill valve inlet port.

ABSTRACT OF THE DISCLOSURE

A toilet fill valve, toilet, and associated methods are provided with an adjustable bowl fill flow. In one embodiment, a toilet fill valve includes a water inlet and a first water outlet configured to supply water to a toilet tank. A bowl fill outlet port extends from a portion of a body of the toilet fill valve, the bowl fill outlet port being operatively coupled to the water inlet. The toilet fill valve includes a bowl fill valve having a bowl fill valve inlet port and a bowl fill valve outlet port, wherein the bowl fill valve inlet port is compatible with the bowl fill outlet port and the bowl fill valve inlet port being coupled to the bowl fill outlet port, the bowl fill valve radially extending from a portion of a body of the toilet fill valve. The bowl fill valve is configured to supply an adjustable flow of water out the bowl fill outlet port for filling a toilet bowl during a flush cycle of a toilet.

Electronic Patent Application Fee Transmittal

Application Number:	
Filing Date:	
Title of Invention:	Toilet Fill Valve with Adjustable Bowl Fill Flow
First Named Inventor/Applicant Name:	Michael J. Schuster
Filer:	Robert D. Gravois
Attorney Docket Number:	171901-1033

Filed as Small Entity

Utility under 35 USC 111(a) Filing Fees

Description	Fee Code	Quantity	Amount	Sub-Total in USD($)
Basic Filing:				
Utility filing Fee (Electronic filing)	4011	1	95	95
Utility Search Fee	2111	1	310	310
Utility Examination Fee	2311	1	125	125
Pages:				
Claims:				
Miscellaneous-Filing:				
Petition:				
Patent-Appeals-and-Interference:				

Description	Fee Code	Quantity	Amount	Sub-Total in USD($)
Post-Allowance-and-Post-Issuance:				
Extension-of-Time:				
Miscellaneous:				
			Total in USD ($)	**530**

Electronic Acknowledgement Receipt	
EFS ID:	11788690
Application Number:	13346355
International Application Number:	
Confirmation Number:	7392
Title of Invention:	Toilet Fill Valve with Adjustable Bowl Fill Flow
First Named Inventor/Applicant Name:	Michael J. Schuster
Customer Number:	24504
Filer:	Robert D. Gravois
Filer Authorized By:	
Attorney Docket Number:	171901-1033
Receipt Date:	09-JAN-2012
Filing Date:	
Time Stamp:	17:05:52
Application Type:	Utility under 35 USC 111(a)

Payment information:

Submitted with Payment	yes
Payment Type	Credit Card
Payment was successfully received in RAM	$530
RAM confirmation Number	4290
Deposit Account	200778
Authorized User	BELAGODU,AKARSH

The Director of the USPTO is hereby authorized to charge indicated fees and credit any overpayment as follows:

Charge any Additional Fees required under 37 C.F.R. Section 1.16 (National application filing, search, and examination fees)

Charge any Additional Fees required under 37 C.F.R. Section 1.17 (Patent application and reexamination processing fees)

Charge any Additional Fees required under 37 C.F.R. Section 1.19 (Document supply fees)

Charge any Additional Fees required under 37 C.F.R. Section 1.21 (Miscellaneous fees and charges)

File Listing:

Document Number	Document Description	File Name	File Size(Bytes)/ Message Digest	Multi Part /.zip	Pages (if appl.)
1	Drawings-only black and white line drawings	01523406.PDF	81060 782729a5d68ffd6fda0d38675696c28814222267	no	9
Warnings:					
Information:					
2	Application Data Sheet	01523418.PDF	1030981 200bcb9d612cf32e8fd93b8958b3f6abcecc3403	no	5
Warnings:					
Information:					
3	Oath or Declaration filed	01523415.PDF	124491 603767325b36ab09154df3ad40decccac9e19a18	no	3
Warnings:					
Information:					
4		01510717.pdf	106568 a616430589ccc08e66b0365a9500d1408ea8a9c5	yes	20

Multipart Description/PDF files in .zip description

Document Description	Start	End
Specification	1	15
Claims	16	19
Abstract	20	20

Warnings:					
Information:					
5	Fee Worksheet (SB06)	fee-info.pdf	32807 a072edb16512e9dc891426af12988dbf0ea0ebf8	no	2
Warnings:					
Information:					
		Total Files Size (in bytes):	1375907		

This Acknowledgement Receipt evidences receipt on the noted date by the USPTO of the indicated documents, characterized by the applicant, and including page counts, where applicable. It serves as evidence of receipt similar to a Post Card, as described in MPEP 503.

New Applications Under 35 U.S.C. 111
If a new application is being filed and the application includes the necessary components for a filing date (see 37 CFR 1.53(b)-(d) and MPEP 506), a Filing Receipt (37 CFR 1.54) will be issued in due course and the date shown on this Acknowledgement Receipt will establish the filing date of the application.

National Stage of an International Application under 35 U.S.C. 371
If a timely submission to enter the national stage of an international application is compliant with the conditions of 35 U.S.C. 371 and other applicable requirements a Form PCT/DO/EO/903 indicating acceptance of the application as a national stage submission under 35 U.S.C. 371 will be issued in addition to the Filing Receipt, in due course.

New International Application Filed with the USPTO as a Receiving Office
If a new international application is being filed and the international application includes the necessary components for an international filing date (see PCT Article 11 and MPEP 1810), a Notification of the International Application Number and of the International Filing Date (Form PCT/RO/105) will be issued in due course, subject to prescriptions concerning national security, and the date shown on this Acknowledgement Receipt will establish the international filing date of the application.