UNITED STATES PATENT AND TRADEMARK OFFICE

UNITED STATES DEPARTMENT OF COMMERCE
United States Patent and Trademark Office
Address: COMMISSIONER FOR PATENTS
P.O. Box 1450
Alexandria, Virginia 22313-1450
www.uspto.gov

APPLICATION NUMBER	FILING OR 371(C) DATE	FIRST NAMED APPLICANT	ATTY.DOCKET NO./TITLE	REQUEST ID
12/786,904	05/25/2010	Michael J. Schuster	171401-1032	5730

Acknowledgement of Loss of Entitlement to Entity Status Discount

The entity status change request below filed through Private PAIR on 10/15/2015 has been accepted.

CERTIFICATIONS:

Change of Entity Status:

☒ Applicant changing to regular undiscounted fee status.
NOTE: Checking this box will be taken to be notification of loss of entitlement to small or micro entity status, as applicable.

This portion must be completed by the signatory or signatories making the entity status change in accordance with 37 CFR 1.4(d)(4).

Signature:	/Michael J. D'Aurelio/
Name:	Michael J. D'Aurelio
Registration Number:	40977

UNITED STATES PATENT AND TRADEMARK OFFICE

UNITED STATES DEPARTMENT OF COMMERCE
United States Patent and Trademark Office
Address: COMMISSIONER FOR PATENTS
P.O. Box 1450
Alexandria, Virginia 22313-1450
www.uspto.gov

APPLICATION NO.	ISSUE DATE	PATENT NO.	ATTORNEY DOCKET NO.	CONFIRMATION NO.
12/786,904	01/31/2012	8104105	171901-1032	3473

24504 7590 01/11/2012
THOMAS, KAYDEN, HORSTEMEYER & RISLEY, LLP
400 INTERSTATE NORTH PARKWAY SE
SUITE 1500
ATLANTA, GA 30339

ISSUE NOTIFICATION

The projected patent number and issue date are specified above.

Determination of Patent Term Adjustment under 35 U.S.C. 154 (b)
(application filed on or after May 29, 2000)

The Patent Term Adjustment is 0 day(s). Any patent to issue from the above-identified application will include an indication of the adjustment on the front page.

If a Continued Prosecution Application (CPA) was filed in the above-identified application, the filing date that determines Patent Term Adjustment is the filing date of the most recent CPA.

Applicant will be able to obtain more detailed information by accessing the Patent Application Information Retrieval (PAIR) WEB site (http://pair.uspto.gov).

Any questions regarding the Patent Term Extension or Adjustment determination should be directed to the Office of Patent Legal Administration at (571)-272-7702. Questions relating to issue and publication fee payments should be directed to the Application Assistance Unit (AAU) of the Office of Data Management (ODM) at (571)-272-4200.

APPLICANT(s) (Please see PAIR WEB site http://pair.uspto.gov for additional applicants):

Michael J. Schuster, Joliet, IL;
Larry Schneider, Wadsworth, IL;

IR103 (Rev. 10/09)

PART B - FEE(S) TRANSMITTAL

Complete and send this form, together with applicable fee(s), to: Mail **Mail Stop ISSUE FEE**
Commissioner for Patents
P.O. Box 1450
Alexandria, Virginia 22313-1450
or Fax (571)-273-2885

INSTRUCTIONS: This form should be used for transmitting the ISSUE FEE and PUBLICATION FEE (if required). Blocks 1 through 5 should be completed where appropriate. All further correspondence including the Patent, advance orders and notification of maintenance fees will be mailed to the current correspondence address as indicated unless corrected below or directed otherwise in Block 1, by (a) specifying a new correspondence address; and/or (b) indicating a separate "FEE ADDRESS" for maintenance fee notifications.

CURRENT CORRESPONDENCE ADDRESS (Note: Use Block 1 for any change of address)

24504 7590 09/29/2011
THOMAS, KAYDEN, HORSTEMEYER & RISLEY, LLP
400 INTERSTATE NORTH PARKWAY SE
SUITE 1500
ATLANTA, GA 30339

Note: A certificate of mailing can only be used for domestic mailings of the Fee(s) Transmittal. This certificate cannot be used for any other accompanying papers. Each additional paper, such as an assignment or formal drawing, must have its own certificate of mailing or transmission.

Certificate of Mailing or Transmission

I hereby certify that this Fee(s) Transmittal is being deposited with the United States Postal Service with sufficient postage for first class mail in an envelope addressed to the Mail Stop ISSUE FEE address above, or being facsimile transmitted to the USPTO (571) 273-2885, on the date indicated below.

Robert D. Gravois	(Depositor's name)
/RDG/	(Signature)
December 28, 2011	(Date)

APPLICATION NO.	FILING DATE	FIRST NAMED INVENTOR	ATTORNEY DOCKET NO.	CONFIRMATION NO.
12/786,904	05/25/2010	Michael J. Schuster	171901-1032	3473

TITLE OF INVENTION: TOILET FILL VALVE WITH ADJUSTABLE BOWL FILL FLOW

APPLN. TYPE	SMALL ENTITY	ISSUE FEE DUE	PUBLICATION FEE DUE	PREV. PAID ISSUE FEE	TOTAL FEE(S) DUE	DATE DUE
nonprovisional	YES	$870	$0	$0	$870	12/29/2011

EXAMINER	ART UNIT	CLASS-SUBCLASS
NGUYEN, TUAN N	3751	004-415000

1. Change of correspondence address or indication of "Fee Address" (37 CFR 1.363).

☐ Change of correspondence address (or Change of Correspondence Address form PTO/SB/122) attached.

☐ "Fee Address" indication (or "Fee Address" Indication form PTO/SB/47; Rev 03-02 or more recent) attached. **Use of a Customer Number is required.**

2. For printing on the patent front page, list

(1) the names of up to 3 registered patent attorneys or agents OR, alternatively,

(2) the name of a single firm (having as a member a registered attorney or agent) and the names of up to 2 registered patent attorneys or agents. If no name is listed, no name will be printed.

1 Thomas, Kayden,
2 Horstemeyer & Risley, LLP
3

3. ASSIGNEE NAME AND RESIDENCE DATA TO BE PRINTED ON THE PATENT (print or type)

PLEASE NOTE: Unless an assignee is identified below, no assignee data will appear on the patent. If an assignee is identified below, the document has been filed for recordation as set forth in 37 CFR 3.11. Completion of this form is NOT a substitute for filing an assignment.

(A) NAME OF ASSIGNEE: MJSI, Inc.

(B) RESIDENCE: (CITY and STATE OR COUNTRY): Shorewood, IL

Please check the appropriate assignee category or categories (will not be printed on the patent): ☐ Individual ☒ Corporation or other private group entity ☐ Government

4a. The following fee(s) are submitted:

☒ Issue Fee
☐ Publication Fee (No small entity discount permitted)
☐ Advance Order - # of Copies _____

4b. Payment of Fee(s): **(Please first reapply any previously paid issue fee shown above)**

☐ A check is enclosed.
☒ Payment by credit card.
☒ The Director is hereby authorized to charge the required fee(s), any deficiency, or credit any overpayment, to Deposit Account Number 20-0778 (enclose an extra copy of this form).

5. **Change in Entity Status** (from status indicated above)

☐ a. Applicant claims SMALL ENTITY status. See 37 CFR 1.27.
☐ b. Applicant is no longer claiming SMALL ENTITY status. See 37 CFR 1.27(g)(2).

NOTE: The Issue Fee and Publication Fee (if required) will not be accepted from anyone other than the applicant; a registered attorney or agent; or the assignee or other party in interest as shown by the records of the United States Patent and Trademark Office.

Authorized Signature /RDG/ Date December 28, 2011

Typed or printed name Robert D. Gravois Registration No. 67,244

This collection of information is required by 37 CFR 1.311. The information is required to obtain or retain a benefit by the public which is to file (and by the USPTO to process) an application. Confidentiality is governed by 35 U.S.C. 122 and 37 CFR 1.14. This collection is estimated to take 12 minutes to complete, including gathering, preparing, and submitting the completed application form to the USPTO. Time will vary depending upon the individual case. Any comments on the amount of time you require to complete this form and/or suggestions for reducing this burden, should be sent to the Chief Information Officer, U.S. Patent and Trademark Office, U.S. Department of Commerce, P.O. Box 1450, Alexandria, Virginia 22313-1450. DO NOT SEND FEES OR COMPLETED FORMS TO THIS ADDRESS. SEND TO: Commissioner for Patents, P.O. Box 1450, Alexandria, Virginia 22313-1450.

Under the Paperwork Reduction Act of 1995, no persons are required to respond to a collection of information unless it displays a valid OMB control number.

Fluidmaster, Inc. - EX1010, Page 003
IPR2024-00633 (Fluidmaster Inc v. Danco Inc)

Electronic Patent Application Fee Transmittal

Application Number:	12786904
Filing Date:	25-May-2010
Title of Invention:	TOILET FILL VALVE WITH ADJUSTABLE BOWL FILL FLOW
First Named Inventor/Applicant Name:	Michael J. Schuster
Filer:	Robert D. Gravois/mary meegan
Attorney Docket Number:	171901-1032

Filed as Small Entity

Utility under 35 USC 111(a) Filing Fees

Description	Fee Code	Quantity	Amount	Sub-Total in USD($)
Basic Filing:				
Pages:				
Claims:				
Miscellaneous-Filing:				
Petition:				
Patent-Appeals-and-Interference:				
Post-Allowance-and-Post-Issuance:				
Utility Appl issue fee	2501	1	870	870
Extension-of-Time:				

Description	Fee Code	Quantity	Amount	Sub-Total in USD($)
Miscellaneous:				
		Total in USD ($)		**870**

Electronic Acknowledgement Receipt

EFS ID:	11716867
Application Number:	12786904
International Application Number:	
Confirmation Number:	3473
Title of Invention:	TOILET FILL VALVE WITH ADJUSTABLE BOWL FILL FLOW
First Named Inventor/Applicant Name:	Michael J. Schuster
Customer Number:	24504
Filer:	Robert D. Gravois/mary meegan
Filer Authorized By:	Robert D. Gravois
Attorney Docket Number:	171901-1032
Receipt Date:	28-DEC-2011
Filing Date:	25-MAY-2010
Time Stamp:	12:09:50
Application Type:	Utility under 35 USC 111(a)

Payment information:

Submitted with Payment	yes
Payment Type	Credit Card
Payment was successfully received in RAM	$870
RAM confirmation Number	7676
Deposit Account	200778
Authorized User	D'AURELIO,MICHAEL J

The Director of the USPTO is hereby authorized to charge indicated fees and credit any overpayment as follows:

Charge any Additional Fees required under 37 C.F.R. Section 1.16 (National application filing, search, and examination fees)

Charge any Additional Fees required under 37 C.F.R. Section 1.21 (Miscellaneous fees and charges)

File Listing:

Document Number	Document Description	File Name	File Size(Bytes)/ Message Digest	Multi Part /.zip	Pages (if appl.)
1	Issue Fee Payment (PTO-85B)	01515426.PDF	1778502 5ca5c0fce603773b00c80a4273a4b5fc8e4b7c62	no	1
Warnings:					
Information:					
2	Fee Worksheet (SB06)	fee-info.pdf	30553 137ba5abb9529f4c4fbfe59147b8eebda98b87fa	no	2
Warnings:					
Information:					
		Total Files Size (in bytes):	1809055		

This Acknowledgement Receipt evidences receipt on the noted date by the USPTO of the indicated documents, characterized by the applicant, and including page counts, where applicable. It serves as evidence of receipt similar to a Post Card, as described in MPEP 503.

<u>New Applications Under 35 U.S.C. 111</u>
If a new application is being filed and the application includes the necessary components for a filing date (see 37 CFR 1.53(b)-(d) and MPEP 506), a Filing Receipt (37 CFR 1.54) will be issued in due course and the date shown on this Acknowledgement Receipt will establish the filing date of the application.

<u>National Stage of an International Application under 35 U.S.C. 371</u>
If a timely submission to enter the national stage of an international application is compliant with the conditions of 35 U.S.C. 371 and other applicable requirements a Form PCT/DO/EO/903 indicating acceptance of the application as a national stage submission under 35 U.S.C. 371 will be issued in addition to the Filing Receipt, in due course.

<u>New International Application Filed with the USPTO as a Receiving Office</u>
If a new international application is being filed and the international application includes the necessary components for an international filing date (see PCT Article 11 and MPEP 1810), a Notification of the International Application Number and of the International Filing Date (Form PCT/RO/105) will be issued in due course, subject to prescriptions concerning national security, and the date shown on this Acknowledgement Receipt will establish the international filing date of the application.

UNITED STATES PATENT AND TRADEMARK OFFICE

UNITED STATES DEPARTMENT OF COMMERCE
United States Patent and Trademark Office
Address: COMMISSIONER FOR PATENTS
P.O. Box 1450
Alexandria, Virginia 22313-1450
www.uspto.gov

NOTICE OF ALLOWANCE AND FEE(S) DUE

24504 7590 09/29/2011
THOMAS, KAYDEN, HORSTEMEYER & RISLEY, LLP
400 INTERSTATE NORTH PARKWAY SE
SUITE 1500
ATLANTA, GA 30339

EXAMINER
NGUYEN, TUAN N

ART UNIT	PAPER NUMBER
3751	

DATE MAILED: 09/29/2011

APPLICATION NO.	FILING DATE	FIRST NAMED INVENTOR	ATTORNEY DOCKET NO.	CONFIRMATION NO.
12/786,904	05/25/2010	Michael J. Schuster	171901-1032	3473

TITLE OF INVENTION: TOILET FILL VALVE WITH ADJUSTABLE BOWL FILL FLOW

APPLN. TYPE	SMALL ENTITY	ISSUE FEE DUE	PUBLICATION FEE DUE	PREV. PAID ISSUE FEE	TOTAL FEE(S) DUE	DATE DUE
nonprovisional	YES	$870	$0	$0	$870	12/29/2011

THE APPLICATION IDENTIFIED ABOVE HAS BEEN EXAMINED AND IS ALLOWED FOR ISSUANCE AS A PATENT. PROSECUTION ON THE MERITS IS CLOSED. THIS NOTICE OF ALLOWANCE IS NOT A GRANT OF PATENT RIGHTS. THIS APPLICATION IS SUBJECT TO WITHDRAWAL FROM ISSUE AT THE INITIATIVE OF THE OFFICE OR UPON PETITION BY THE APPLICANT. SEE 37 CFR 1.313 AND MPEP 1308.

THE ISSUE FEE AND PUBLICATION FEE (IF REQUIRED) MUST BE PAID WITHIN THREE MONTHS FROM THE MAILING DATE OF THIS NOTICE OR THIS APPLICATION SHALL BE REGARDED AS ABANDONED. THIS STATUTORY PERIOD CANNOT BE EXTENDED. SEE 35 U.S.C. 151. THE ISSUE FEE DUE INDICATED ABOVE DOES NOT REFLECT A CREDIT FOR ANY PREVIOUSLY PAID ISSUE FEE IN THIS APPLICATION. IF AN ISSUE FEE HAS PREVIOUSLY BEEN PAID IN THIS APPLICATION (AS SHOWN ABOVE), THE RETURN OF PART B OF THIS FORM WILL BE CONSIDERED A REQUEST TO REAPPLY THE PREVIOUSLY PAID ISSUE FEE TOWARD THE ISSUE FEE NOW DUE.

HOW TO REPLY TO THIS NOTICE:

I. Review the SMALL ENTITY status shown above.

If the SMALL ENTITY is shown as YES, verify your current SMALL ENTITY status:

A. If the status is the same, pay the TOTAL FEE(S) DUE shown above.

B. If the status above is to be removed, check box 5b on Part B - Fee(s) Transmittal and pay the PUBLICATION FEE (if required) and twice the amount of the ISSUE FEE shown above, or

If the SMALL ENTITY is shown as NO:

A. Pay TOTAL FEE(S) DUE shown above, or

B. If applicant claimed SMALL ENTITY status before, or is now claiming SMALL ENTITY status, check box 5a on Part B - Fee(s) Transmittal and pay the PUBLICATION FEE (if required) and 1/2 the ISSUE FEE shown above.

II. PART B - FEE(S) TRANSMITTAL, or its equivalent, must be completed and returned to the United States Patent and Trademark Office (USPTO) with your ISSUE FEE and PUBLICATION FEE (if required). If you are charging the fee(s) to your deposit account, section "4b" of Part B - Fee(s) Transmittal should be completed and an extra copy of the form should be submitted. If an equivalent of Part B is filed, a request to reapply a previously paid issue fee must be clearly made, and delays in processing may occur due to the difficulty in recognizing the paper as an equivalent of Part B.

III. All communications regarding this application must give the application number. Please direct all communications prior to issuance to Mail Stop ISSUE FEE unless advised to the contrary.

IMPORTANT REMINDER: Utility patents issuing on applications filed on or after Dec. 12, 1980 may require payment of maintenance fees. It is patentee's responsibility to ensure timely payment of maintenance fees when due.

PTOL-85 (Rev. 02/11)

Fluidmaster, Inc. - EX1010, Page 008
IPR2024-00633 (Fluidmaster Inc v. Danco Inc)

PART B - FEE(S) TRANSMITTAL

Complete and send this form, together with applicable fee(s), to: Mail **Mail Stop ISSUE FEE**
Commissioner for Patents
P.O. Box 1450
Alexandria, Virginia 22313-1450
or Fax (571)-273-2885

INSTRUCTIONS: This form should be used for transmitting the ISSUE FEE and PUBLICATION FEE (if required). Blocks 1 through 5 should be completed where appropriate. All further correspondence including the Patent, advance orders and notification of maintenance fees will be mailed to the current correspondence address as indicated unless corrected below or directed otherwise in Block 1, by (a) specifying a new correspondence address; and/or (b) indicating a separate "FEE ADDRESS" for maintenance fee notifications.

CURRENT CORRESPONDENCE ADDRESS (Note: Use Block 1 for any change of address)

24504 7590 09/29/2011
THOMAS, KAYDEN, HORSTEMEYER & RISLEY, LLP
400 INTERSTATE NORTH PARKWAY SE
SUITE 1500
ATLANTA, GA 30339

Note: A certificate of mailing can only be used for domestic mailings of the Fee(s) Transmittal. This certificate cannot be used for any other accompanying papers. Each additional paper, such as an assignment or formal drawing, must have its own certificate of mailing or transmission.

Certificate of Mailing or Transmission
I hereby certify that this Fee(s) Transmittal is being deposited with the United States Postal Service with sufficient postage for first class mail in an envelope addressed to the Mail Stop ISSUE FEE address above, or being facsimile transmitted to the USPTO (571) 273-2885, on the date indicated below.

(Depositor's name)
(Signature)
(Date)

APPLICATION NO.	FILING DATE	FIRST NAMED INVENTOR	ATTORNEY DOCKET NO.	CONFIRMATION NO.
12/786,904	05/25/2010	Michael J. Schuster	171901-1032	3473

TITLE OF INVENTION: TOILET FILL VALVE WITH ADJUSTABLE BOWL FILL FLOW

APPLN. TYPE	SMALL ENTITY	ISSUE FEE DUE	PUBLICATION FEE DUE	PREV. PAID ISSUE FEE	TOTAL FEE(S) DUE	DATE DUE
nonprovisional	YES	$870	$0	$0	$870	12/29/2011

EXAMINER	ART UNIT	CLASS-SUBCLASS
NGUYEN, TUAN N	3751	004-415000

1. Change of correspondence address or indication of "Fee Address" (37 CFR 1.363).
- ❑ Change of correspondence address (or Change of Correspondence Address form PTO/SB/122) attached.
- ❑ "Fee Address" indication (or "Fee Address" Indication form PTO/SB/47; Rev 03-02 or more recent) attached. **Use of a Customer Number is required.**

2. For printing on the patent front page, list
(1) the names of up to 3 registered patent attorneys or agents OR, alternatively,
(2) the name of a single firm (having as a member a registered attorney or agent) and the names of up to 2 registered patent attorneys or agents. If no name is listed, no name will be printed.

1_____
2_____
3_____

3. ASSIGNEE NAME AND RESIDENCE DATA TO BE PRINTED ON THE PATENT (print or type)

PLEASE NOTE: Unless an assignee is identified below, no assignee data will appear on the patent. If an assignee is identified below, the document has been filed for recordation as set forth in 37 CFR 3.11. Completion of this form is NOT a substitute for filing an assignment.

(A) NAME OF ASSIGNEE (B) RESIDENCE: (CITY and STATE OR COUNTRY)

Please check the appropriate assignee category or categories (will not be printed on the patent) : ❑ Individual ❑ Corporation or other private group entity ❑ Government

4a. The following fee(s) are submitted:
- ❑ Issue Fee
- ❑ Publication Fee (No small entity discount permitted)
- ❑ Advance Order - # of Copies _____

4b. Payment of Fee(s): **(Please first reapply any previously paid issue fee shown above)**
- ❑ A check is enclosed.
- ❑ Payment by credit card. Form PTO-2038 is attached.
- ❑ The Director is hereby authorized to charge the required fee(s), any deficiency, or credit any overpayment, to Deposit Account Number _____ (enclose an extra copy of this form).

5. **Change in Entity Status** (from status indicated above)
- ❑ a. Applicant claims SMALL ENTITY status. See 37 CFR 1.27.
- ❑ b. Applicant is no longer claiming SMALL ENTITY status. See 37 CFR 1.27(g)(2).

NOTE: The Issue Fee and Publication Fee (if required) will not be accepted from anyone other than the applicant; a registered attorney or agent; or the assignee or other party in interest as shown by the records of the United States Patent and Trademark Office.

Authorized Signature _____ Date _____

Typed or printed name _____ Registration No. _____

This collection of information is required by 37 CFR 1.311. The information is required to obtain or retain a benefit by the public which is to file (and by the USPTO to process) an application. Confidentiality is governed by 35 U.S.C. 122 and 37 CFR 1.14. This collection is estimated to take 12 minutes to complete, including gathering, preparing, and submitting the completed application form to the USPTO. Time will vary depending upon the individual case. Any comments on the amount of time you require to complete this form and/or suggestions for reducing this burden, should be sent to the Chief Information Officer, U.S. Patent and Trademark Office, U.S. Department of Commerce, P.O. Box 1450, Alexandria, Virginia 22313-1450. DO NOT SEND FEES OR COMPLETED FORMS TO THIS ADDRESS. SEND TO: Commissioner for Patents, P.O. Box 1450, Alexandria, Virginia 22313-1450.

Under the Paperwork Reduction Act of 1995, no persons are required to respond to a collection of information unless it displays a valid OMB control number.

Fluidmaster, Inc. - EX1010, Page 009
IPR2024-00633 (Fluidmaster Inc v. Danco Inc)

UNITED STATES PATENT AND TRADEMARK OFFICE

UNITED STATES DEPARTMENT OF COMMERCE
United States Patent and Trademark Office
Address: COMMISSIONER FOR PATENTS
P.O. Box 1450
Alexandria, Virginia 22313-1450
www.uspto.gov

APPLICATION NO.	FILING DATE	FIRST NAMED INVENTOR	ATTORNEY DOCKET NO.	CONFIRMATION NO.
12/786,904	05/25/2010	Michael J. Schuster	171901-1032	3473

24504 7590 09/29/2011
THOMAS, KAYDEN, HORSTEMEYER & RISLEY, LLP
400 INTERSTATE NORTH PARKWAY SE
SUITE 1500
ATLANTA, GA 30339

EXAMINER
NGUYEN, TUAN N

ART UNIT	PAPER NUMBER
3751	

DATE MAILED: 09/29/2011

Determination of Patent Term Adjustment under 35 U.S.C. 154 (b)
(application filed on or after May 29, 2000)

The Patent Term Adjustment to date is 0 day(s). If the issue fee is paid on the date that is three months after the mailing date of this notice and the patent issues on the Tuesday before the date that is 28 weeks (six and a half months) after the mailing date of this notice, the Patent Term Adjustment will be 0 day(s).

If a Continued Prosecution Application (CPA) was filed in the above-identified application, the filing date that determines Patent Term Adjustment is the filing date of the most recent CPA.

Applicant will be able to obtain more detailed information by accessing the Patent Application Information Retrieval (PAIR) WEB site (http://pair.uspto.gov).

Any questions regarding the Patent Term Extension or Adjustment determination should be directed to the Office of Patent Legal Administration at (571)-272-7702. Questions relating to issue and publication fee payments should be directed to the Customer Service Center of the Office of Patent Publication at 1-(888)-786-0101 or (571)-272-4200.

PTOL-85 (Rev. 02/11)

Privacy Act Statement

The Privacy Act of 1974 (P.L. 93-579) requires that you be given certain information in connection with your submission of the attached form related to a patent application or patent. Accordingly, pursuant to the requirements of the Act, please be advised that: (1) the general authority for the collection of this information is 35 U.S.C. 2(b)(2); (2) furnishing of the information solicited is voluntary; and (3) the principal purpose for which the information is used by the U.S. Patent and Trademark Office is to process and/or examine your submission related to a patent application or patent. If you do not furnish the requested information, the U.S. Patent and Trademark Office may not be able to process and/or examine your submission, which may result in termination of proceedings or abandonment of the application or expiration of the patent.

The information provided by you in this form will be subject to the following routine uses:

1. The information on this form will be treated confidentially to the extent allowed under the Freedom of Information Act (5 U.S.C. 552) and the Privacy Act (5 U.S.C 552a). Records from this system of records may be disclosed to the Department of Justice to determine whether disclosure of these records is required by the Freedom of Information Act.
2. A record from this system of records may be disclosed, as a routine use, in the course of presenting evidence to a court, magistrate, or administrative tribunal, including disclosures to opposing counsel in the course of settlement negotiations.
3. A record in this system of records may be disclosed, as a routine use, to a Member of Congress submitting a request involving an individual, to whom the record pertains, when the individual has requested assistance from the Member with respect to the subject matter of the record.
4. A record in this system of records may be disclosed, as a routine use, to a contractor of the Agency having need for the information in order to perform a contract. Recipients of information shall be required to comply with the requirements of the Privacy Act of 1974, as amended, pursuant to 5 U.S.C. 552a(m).
5. A record related to an International Application filed under the Patent Cooperation Treaty in this system of records may be disclosed, as a routine use, to the International Bureau of the World Intellectual Property Organization, pursuant to the Patent Cooperation Treaty.
6. A record in this system of records may be disclosed, as a routine use, to another federal agency for purposes of National Security review (35 U.S.C. 181) and for review pursuant to the Atomic Energy Act (42 U.S.C. 218(c)).
7. A record from this system of records may be disclosed, as a routine use, to the Administrator, General Services, or his/her designee, during an inspection of records conducted by GSA as part of that agency's responsibility to recommend improvements in records management practices and programs, under authority of 44 U.S.C. 2904 and 2906. Such disclosure shall be made in accordance with the GSA regulations governing inspection of records for this purpose, and any other relevant (i.e., GSA or Commerce) directive. Such disclosure shall not be used to make determinations about individuals.
8. A record from this system of records may be disclosed, as a routine use, to the public after either publication of the application pursuant to 35 U.S.C. 122(b) or issuance of a patent pursuant to 35 U.S.C. 151. Further, a record may be disclosed, subject to the limitations of 37 CFR 1.14, as a routine use, to the public if the record was filed in an application which became abandoned or in which the proceedings were terminated and which application is referenced by either a published application, an application open to public inspection or an issued patent.
9. A record from this system of records may be disclosed, as a routine use, to a Federal, State, or local law enforcement agency, if the USPTO becomes aware of a violation or potential violation of law or regulation.

Notice of Allowability	Application No.	Applicant(s)	
	12/786,904	SCHUSTER ET AL.	
	Examiner	Art Unit	
	TUAN NGUYEN	3751	

-- The MAILING DATE of this communication appears on the cover sheet with the correspondence address--

All claims being allowable, PROSECUTION ON THE MERITS IS (OR REMAINS) CLOSED in this application. If not included herewith (or previously mailed), a Notice of Allowance (PTOL-85) or other appropriate communication will be mailed in due course. **THIS NOTICE OF ALLOWABILITY IS NOT A GRANT OF PATENT RIGHTS.** This application is subject to withdrawal from issue at the initiative of the Office or upon petition by the applicant. See 37 CFR 1.313 and MPEP 1308.

1. ☒ This communication is responsive to *the paper filed 9/13/11*.

2. ☒ The allowed claim(s) is/are *1-7,18,19,26*.

3. ☐ Acknowledgment is made of a claim for foreign priority under 35 U.S.C. § 119(a)-(d) or (f).
   a) ☐ All b) ☐ Some* c) ☐ None of the:
      1. ☐ Certified copies of the priority documents have been received.
      2. ☐ Certified copies of the priority documents have been received in Application No. _____ .
      3. ☐ Copies of the certified copies of the priority documents have been received in this national stage application from the International Bureau (PCT Rule 17.2(a)).

   * Certified copies not received: _____.

Applicant has THREE MONTHS FROM THE "MAILING DATE" of this communication to file a reply complying with the requirements noted below. Failure to timely comply will result in ABANDONMENT of this application.
THIS THREE-MONTH PERIOD IS NOT EXTENDABLE.

4. ☐ A SUBSTITUTE OATH OR DECLARATION must be submitted. Note the attached EXAMINER'S AMENDMENT or NOTICE OF INFORMAL PATENT APPLICATION (PTO-152) which gives reason(s) why the oath or declaration is deficient.

5. ☐ CORRECTED DRAWINGS (as "replacement sheets") must be submitted.
   (a) ☐ including changes required by the Notice of Draftsperson's Patent Drawing Review (PTO-948) attached
      1) ☐ hereto or 2) ☐ to Paper No./Mail Date _____.
   (b) ☐ including changes required by the attached Examiner's Amendment / Comment or in the Office action of Paper No./Mail Date _____.

   Identifying indicia such as the application number (see 37 CFR 1.84(c)) should be written on the drawings in the front (not the back) of each sheet. Replacement sheet(s) should be labeled as such in the header according to 37 CFR 1.121(d).

6. ☐ DEPOSIT OF and/or INFORMATION about the deposit of BIOLOGICAL MATERIAL must be submitted. Note the attached Examiner's comment regarding REQUIREMENT FOR THE DEPOSIT OF BIOLOGICAL MATERIAL.

Attachment(s)

1. ☐ Notice of References Cited (PTO-892)
2. ☐ Notice of Draftperson's Patent Drawing Review (PTO-948)
3. ☐ Information Disclosure Statements (PTO/SB/08), Paper No./Mail Date _____
4. ☐ Examiner's Comment Regarding Requirement for Deposit of Biological Material
5. ☐ Notice of Informal Patent Application
6. ☐ Interview Summary (PTO-413), Paper No./Mail Date _____ .
7. ☐ Examiner's Amendment/Comment
8. ☒ Examiner's Statement of Reasons for Allowance
9. ☐ Other _____.

Fluidmaster, Inc. - EX1010, Page 012
IPR2024-00633 (Fluidmaster Inc v. Danco Inc)

REASONS FOR ALLOWANCE

1. The following is an examiner's statement of reasons for allowance: The applicant's arguments filed 9/13/11 are persuasive.

Any comments considered necessary by applicant must be submitted no later than the payment of the issue fee and, to avoid processing delays, should preferably accompany the issue fee. Such submissions should be clearly labeled "Comments on Statement of Reasons for Allowance."

2. Any inquiry concerning this communication or earlier communications from the examiner should be directed to TUAN NGUYEN whose telephone number is (571)272-4892. The examiner can normally be reached on Monday to Friday between 10am-6pm.

If attempts to reach the examiner by telephone are unsuccessful, the examiner's supervisor, Greg Huson can be reached on (571)272-4887. The fax phone number for the organization where this application or proceeding is assigned is 571-273-8300.

Information regarding the status of an application may be obtained from the Patent Application Information Retrieval (PAIR) system. Status information for published applications may be obtained from either Private PAIR or Public PAIR. Status information for unpublished applications is available through Private PAIR only. For more information about the PAIR system, see http://pair-direct.uspto.gov. Should you have questions on access to the Private PAIR system, contact the Electronic Business Center (EBC) at 866-217-9197 (toll-free). If you would like assistance from a USPTO Customer Service Representative or access to the automated information system, call 800-786-9199 (IN USA OR CANADA) or 571-272-1000.

/Tuan N Nguyen/
Primary Examiner, Art Unit 3751

TN

UNITED STATES PATENT AND TRADEMARK OFFICE

UNITED STATES DEPARTMENT OF COMMERCE
United States Patent and Trademark Office
Address: COMMISSIONER FOR PATENTS
P.O. Box 1450
Alexandria, Virginia 22313-1450
www.uspto.gov

BIB DATA SHEET

CONFIRMATION NO. 3473

SERIAL NUMBER	FILING or 371(c) DATE	CLASS	GROUP ART UNIT	ATTORNEY DOCKET NO.
12/786,904	05/25/2010 **RULE**	004	3751	171901-1032

APPLICANTS

Michael J. Schuster, Joliet, IL;
Larry Schneider, Wadsworth, IL;

**** CONTINUING DATA ****************************

This application is a CON of 10/958,797 10/05/2004 PAT 7,743,436
which is a CIP of 10/798,606 03/11/2004 PAT 6,823,889

**** FOREIGN APPLICATIONS ****************************

**** IF REQUIRED, FOREIGN FILING LICENSE GRANTED **** ** SMALL ENTITY **
06/04/2010

Foreign Priority claimed ☐ Yes ☑ No 35 USC 119(a-d) conditions met ☐ Yes ☑ No Verified and Acknowledged /TUAN N NGUYEN/ Examiner's Signature	☐ Met after Allowance Initials	STATE OR COUNTRY	SHEETS DRAWINGS	TOTAL CLAIMS	INDEPENDENT CLAIMS
		IL	9	9	3

ADDRESS

THOMAS, KAYDEN, HORSTEMEYER & RISLEY, LLP
400 INTERSTATE NORTH PARKWAY SE
SUITE 1500
ATLANTA, GA 30339
UNITED STATES

TITLE

Toilet Fill Valve with Adjustable Bowl Fill Flow

FILING FEE RECEIVED 462	FEES: Authority has been given in Paper No._____ to charge/credit DEPOSIT ACCOUNT No._____ for following:	☐ All Fees ☐ 1.16 Fees (Filing) ☐ 1.17 Fees (Processing Ext. of time) ☐ 1.18 Fees (Issue) ☐ Other _____ ☐ Credit

EAST Search History

EAST Search History (Interference)

Ref #	Hits	Search Query	DBs	Default Operator	Plurals	Time Stamp
L2	43	toilet and bowl and fill and valve and (connection coupling) and groove and (seal sealing) and ring	US-PGPUB; UPAD	OR	ON	2011/09/20 20:35

9/20/11 8:35:56 PM
C:\Documents and Settings\TNguyen25\My Documents\EAST\workspaces\12786904.wsp

IN THE UNITED STATES PATENT AND TRADEMARK OFFICE

In re the application of: Confirmation: 3473

Schuster *et al.* Art Unit: 3751

Application Number: 12/786,904 Examiner: Tuan N. Nguyen

Filing Date: May 25, 2010 Docket No.: 171901-1032

Title: TOILET FILL VALVE WITH ADJUSTABLE BOWL FILL FLOW

OK TO ENTER: /T.N./

09/20/2011

RESPONSE TO FINAL OFFICE ACTION OF MAY 13, 2011

Mail Stop Amendment
Commissioner for Patents
P.O. Box 1450
Alexandria, VA 22313-1450

Sir:

In regard to the outstanding Final Office Action mailed on May 13, 2011, the following Response is submitted.

It is believed that no extensions of time or fees for net addition of claims are required, beyond those that may otherwise be provided for in documents accompanying this paper. However, in the event that additional extensions of time are necessary to allow consideration of this paper, such extensions are hereby petitioned under 37 C.F.R. § 1.136(a), and any fees required therefor (including fees for net addition of claims) are hereby authorized to be charged to Deposit Account No. 20-0778.

Search Notes	Application/Control No.	Applicant(s)/Patent Under Reexamination
	12786904	SCHUSTER ET AL.
	Examiner	**Art Unit**
	TUAN NGUYEN	3751

SEARCHED

Class	Subclass	Date	Examiner
4	331,324,366,415,675	9/16/11	TN
137	15.26,432,434,436,437,441-444	9/16/11	TN
285	91	9/16/11	TN

SEARCH NOTES

Search Notes	Date	Examiner
EAST BRS TEXT SEARCH ATTACHED	9/20/11	TN

INTERFERENCE SEARCH

Class	Subclass	Date	Examiner
USPGPUB	INTERFERENCE TEXT SEARCH ATTACHED	9/20/11	TN

Issue Classification	Application/Control No.	Applicant(s)/Patent Under Reexamination
	12786904	SCHUSTER ET AL.
	Examiner	**Art Unit**
	TUAN NGUYEN	3751

ORIGINAL		INTERNATIONAL CLASSIFICATION	
CLASS	SUBCLASS	CLAIMED	NON-CLAIMED
4	415	E 0 3 D 1 / 00 (2006.01.01)	

CROSS REFERENCE(S)

CLASS	SUBCLASS (ONE SUBCLASS PER BLOCK)				
4	324				
137	441				

☒ **Claims renumbered in the same order as presented by applicant** ☐ **CPA** ☐ **T.D.** ☐ **R.1.47**

Final	Original	Final	Original	Final	Original	Final	Original	Final	Original	Final	Original	Final	Original	Final	Original

NONE (Assistant Examiner)	(Date)	**Total Claims Allowed:** 10	
/Tuan N Nguyen/ Primary Examiner.Art Unit 3751 (Primary Examiner)	9/20/11 (Date)	O.G. Print Claim(s) 1	O.G. Print Figure 4 & 6A

EAST Search History

EAST Search History (Prior Art)

Ref #	Hits	Search Query	DBs	Default Operator	Plurals	Time Stamp
L1	119	toilet and bowl and fill and valve and (connection coupling) and groove and (seal sealing) and ring	USPAT; EPO; JPO; DERWENT	OR	ON	2011/09/20 20:35

9/20/11 8:36:19 PM
C:\Documents and Settings\TNguyen25\My Documents\EAST\workspaces\12786904.wsp

IN THE UNITED STATES PATENT AND TRADEMARK OFFICE

In re the application of: Confirmation: 3473

Schuster *et al*. Art Unit: 3751

Application Number: 12/786,904 Examiner: Tuan N. Nguyen

Filing Date: May 25, 2010 Docket No.: 171901-1032

Title: TOILET FILL VALVE WITH ADJUSTABLE BOWL FILL FLOW

RESPONSE TO FINAL OFFICE ACTION OF MAY 13, 2011

Mail Stop Amendment
Commissioner for Patents
P.O. Box 1450
Alexandria, VA 22313-1450

Sir:

In regard to the outstanding Final Office Action mailed on May 13, 2011, the following Response is submitted.

It is believed that no extensions of time or fees for net addition of claims are required, beyond those that may otherwise be provided for in documents accompanying this paper. However, in the event that additional extensions of time are necessary to allow consideration of this paper, such extensions are hereby petitioned under 37 C.F.R. § 1.136(a), and any fees required therefor (including fees for net addition of claims) are hereby authorized to be charged to Deposit Account No. 20-0778.

IN THE CLAIMS:

1. (Previously Presented) A toilet fill valve, comprising:

a water inlet;

a first water outlet configured to supply water to a toilet tank;

a bowl fill outlet port radially extending from a portion of a body of the toilet fill valve, the bowl fill outlet port being operatively coupled to the water inlet, and the bowl fill outlet port comprising an integrally molded portion of the body of the toilet fill valve;

a bowl fill valve having a bowl fill valve inlet port and a bowl fill valve outlet port, wherein the bowl fill valve inlet port is compatible with the bowl fill outlet port and the bowl fill valve inlet port being directly coupled to the bowl fill outlet port and establishing direct contact between the bowl fill outlet port and the bowl fill valve inlet port, wherein the bowl fill valve inlet port and the bowl fill valve outlet port each comprise an integrally molded portion of the bowl fill valve;

the bowl fill valve being configured to supply an adjustable flow of water out the bowl fill valve outlet port for filling a toilet bowl during a flush cycle of a toilet;

the bowl fill outlet port further comprising a first thread;

the bowl fill valve inlet port further comprising a second thread, the first thread being compatible with the second thread, and the first thread being engaged with the second thread and affixing the bowl fill valve inlet port to the bowl fill outlet port; and

a sealing ring clamped between a portion of the bowl fill outlet port

and a portion of the bowl fill valve inlet port to form a seal between the bowl fill outlet port and the bowl fill valve inlet port.

2. (Original) The toilet fill valve of claim 1, wherein bowl fill valve extends beyond the bowl fill outlet port in a radial direction with respect to a portion of the body of the toilet fill valve.

3. (Previously Presented) The toilet fill valve of claim 1, wherein: the bowl fill outlet port further comprises a female receptacle; and the bowl fill valve inlet port further comprises a male end.

4. (Previously Presented) The toilet fill valve of claim 1, wherein: the bowl fill valve inlet port further comprises a female receptacle; and the bowl fill outlet port further comprises a male end.

5. (Original) The toilet fill valve of claim 1, further comprising:

a float;

an actuating arm coupled to the float, the actuating arm radially extending in an orthogonal direction relative to a longitudinal axis of the toilet fill valve; and

the bowl fill valve extending in an orthogonal direction relative to the longitudinal axis of the toilet fill valve, wherein the actuating arm is angularly offset relative to the bowl fill valve, thereby preventing an interference with the

bowl fill valve and a translational stem extending from the float to a free end of the actuating arm.

6. (Original) The toilet fill valve of claim 1, wherein the bowl fill valve outlet port further comprises a nipple adapted to mate with an end of a tube.

7. (Original) The toilet fill valve of claim 1, wherein the bowl fill valve further comprises a number of biased positions.

8-17. (Canceled).

18. (Previously Presented) A toilet with a toilet tank having an adjustable bowl fill water flow, comprising:

a toilet fill valve in the toilet tank, the toilet valve having a water inlet coupled to a water source outside of the toilet tank and a water outlet directing a flow of water into the toilet tank;

a bowl fill outlet port radially extending from a portion of a body of the toilet fill valve, the bowl fill outlet port being operatively coupled to the water inlet and the bowl fill outlet port comprising an integrally molded portion of the body of the toilet fill valve;

a bowl fill valve having a bowl fill valve inlet port and a bowl fill valve outlet port, wherein the bowl fill valve inlet port is compatible with the bowl fill outlet port and the bowl fill valve inlet port being directly coupled to the bowl fill

outlet port and establishing direct contact between the bowl fill outlet port and the bowl fill valve inlet port, wherein the bowl fill valve inlet port and the bowl fill valve outlet port each comprise an integrally molded portion of the bowl fill valve;

a tube having a first end attached to the bowl fill valve outlet port and a second end directed into an overflow tube in the toilet tank, wherein a flow of water into the overflow tube is directed to a toilet bowl of the toilet;

the bowl fill valve being configured to supply an adjustable flow of water out the bowl fill valve outlet port through the tube and into the overflow tube for filling the toilet bowl during a flush cycle of a toilet;

the bowl fill outlet port further comprising a first thread;

the bowl fill valve inlet port further comprising a second thread, the first thread being compatible with the second thread, and the first thread being engaged with the second thread and affixing the bowl fill valve inlet port to the bowl fill outlet port; and

a sealing ring clamped between a portion of the bowl fill outlet port and a portion of the bowl fill valve inlet port to form a seal between the bowl fill outlet port and the bowl fill valve inlet port.

19. (Previously Presented) A method for providing an adjustable bowl fill water flow in a toilet fill valve, comprising the steps of:

operatively coupling a bowl fill outlet port to a water inlet of the toilet fill valve;

radially extending the bowl fill outlet port from a portion of a body of

the toilet fill valve; and

coupling a bowl fill valve inlet port of a bowl fill valve directly to the bowl fill outlet port by mating a first thread associated with the bowl fill outlet port with a second thread associated with the bowl fill valve inlet port, wherein the bowl fill valve inlet port is affixed to the bowl fill outlet port via the first and second threads, the bowl fill valve inlet port being compatible with the bowl fill outlet port, and the bowl fill valve being configured to provide for the adjustable bowl fill water flow out a bowl fill valve outlet port of the bowl fill valve for filling a toilet bowl during a flush cycle of a toilet; and

clamping a sealing ring between a portion of the bowl fill valve inlet port and a portion of the bowl fill outlet port

20-25. (Canceled).

26. (Previously Presented) The method of claim 19, wherein the bowl fill outlet port comprises an integrally molded portion of the body of the toilet fill valve.

REMARKS

This is a full and timely response to the outstanding final Office Action mailed May 13, 2011. Upon entry of this response, claims 1-7, 18-19 and 26 remain pending in the present application. Reconsideration of the pending claims is respectfully requested.

RESPONSE TO ARGUMENTS

I. REJECTIONS OF CLAIMS 1-7, 18, 19 AND 26

The Office Action indicates that claims 1-7, 18, 19 and 26 stand rejected under 35 U.S.C. § 103 as allegedly being unpatentable over *Horad* (U.S. Patent No. 5,715,860, hereinafter "*Horad*") in view of either one of *Robinson et al.* (U.S. Patent No. 6,409,221, hereinafter "*Robinson*"), Bjerke (U.S. Patent No. 5,962,868, hereinafter "*Bjerke*"), or Mueller et al. (U.S. Patent No. 5,624,073, hereinafter "*Mueller*"). Alternatively, claims 1-7, 18, and 19 have been rejected under 35 U.S.C. § 103(a) as allegedly being unpatentable over *DeMarco* (U.S. Patent No. 5,708,991, hereinafter "*DeMarco"*) in view of either one of *Robinson, Bjerke, or Mueller.*

A prima facie case of obviousness is established only when the prior art teaches or suggests all of the elements of the claims. MPEP §2143.03, In re Rijckaert, 9 F.3d 1531, 28 U.S.P.Q2d 1955, 1956 (Fed. Cir. 1993). It is well established at law that, for a proper rejection of a claim under 35 U.S.C. §103 as being obvious based upon a combination of references, the cited combination of references must disclose, teach, or suggest (either implicitly or explicitly) all elements/features/steps of the claim at issue. *See, e.g.,* In re Dow Chemical, 5

U.S.P.Q.2d 1529, 1531 (Fed. Cir. 1988); In re Keller, 208 U.S.P.Q.2d 871, 881 (C.C.P.A. 1981). As has been acknowledged by the Court of Appeals for the Federal Circuit, the U.S. Patent and Trademark Office ("USPTO") has the burden under 35 U.S.C. § 103 to establish obviousness by showing objective teachings in the prior art or generally available knowledge of one of ordinary skill in the art that would lead that individual to the claimed invention. In re Fine, 837 F.2d 1071, 1074, 5 U.S.P.Q. 2d 1596, 1598 (Fed. Cir. 1988).

In addition, "rejections on obviousness cannot be sustained by mere conclusory statements; instead, there must be some articulated reasoning with some rational underpinning to support the legal conclusion of obviousness." KSR Int'l Co. v. Teleflex, Inc., 127 S. Ct. 1727, 1741, 82 U.S.P.Q.2d at 1396 (quoting In re Kahn, 441 F.3d 977, 988, 78 U.S.P.Q.2d 1329, 1336 (Fed. Cir. 2006)). In order to reject a claim on the basis that its differences over the prior art are merely "design choice," there must be some teaching or suggestion in the prior art that would lead one of ordinary skill in the art to combine and/or modify the prior art as claimed. In re Chu, 66 F.3d 292, 299 (Fed. Cir. 1995); see also Total Containment, Inc. v. Environ Prods., 1999 U.S. App. LEXIS 22072, *12-14 (Fed. Cir. 1999)(vacating finding of obviousness where differences from prior art were considered "design choices," because there was no suggestion in any cited prior art to combine the various elements or that one of ordinary skill in the art would know to combine these references).

Applicant submits that the rejection of the claims fails to meet this standard. For the reasons that follow, Applicant, therefore, respectfully requests that the rejection of the claims be withdrawn.

A. The *Horad* Reference

The Office Action collectively bases the rejection of Claims 1-7, 18, 19 and 26 on the premise that *Horad* teaches all of the limitations of said claims except for the specific type of coupling claimed therein, which is allegedly taught by *Robinson*, *Bjerke* or *Mueller*, but does not specify where in any of these three additional references such coupling type is taught. The Office Action further summarily states that "it would be obvious to one of ordinary skill in the art, at the time the invention was made to modify the connection coupling type of *Hoard* in view of the teaching of *Robinson*, *Bjerke* or *Mueller*." Moreover, the Office Action further states that "the method as claimed would be inherent" in view of *Robinson*, *Bjerke* or *Mueller*," but does not provide any particular reasoning in support of these conclusions or identify any teaching or suggestion to one of ordinary skill in the art to combine *Horad* with *Robinson*, *Bjerke* or *Mueller* to obviate Applicant's claims. Lastly, the Office Action states that the coupling claimed in claims 1-7, 18, 19, and 26 "would obviously be a mere design choice," without any substantiation of how or why a person of ordinary skill in the art would select the claimed coupling in view of *Horad, Robinson*, *Bjerke* or *Mueller*. See In re Dembiczak, 175 F.3d 994, 1000 (Fed. Cir. 1999) (reversing finding of obviousness where reference-by-reference, limitation-by-limitation analysis failed to (1) demonstrate how cited references taught or suggested their combination to

yield the claimed invention and (2) explain "what specific understanding or technical principal" would have made modification of the references an "obvious design choice")(abrogated on other grounds by In re Gartside, 203 F.3d 1305, 1316 (Fed. Cir. 2000)); see also, In re Chu, 66 F.3d at 299; Total Containment, 1999 U.S. App. LEXIS 22072 at *12-14.

The key to supporting an allegation of obviousness under 35 U.S.C. § 103 is the clear articulation of the reasons why the Examiner believes that claimed invention would have been obvious. *See* MPEP § 2141. As stated by the Supreme Court, "[R]ejections on obviousness cannot be sustained by mere conclusory statements; instead, there must be some articulated reasoning with some rational underpinning to support the legal conclusion of obviousness." KSR Int'l Co. v. Teleflex Inc. *(KSR)*, 550 U.S. 398, 418, 82 USPQ2d 1385, 1396 (quoting In re Kahn, 441 F.3d 977, 988, 78 USPQ2d 1329, 1336 (Fed. Cir. 2006)) (2007). Applicants respectfully submit that a *prima facie* case of obviousness is not established using the art of record.

1. Independent Claims 1 and 18

a. *Horad* does not teach a bowl fill outlet port radially extending from a portion of a body of the toilet fill valve that comprises an integrally molded portion of the body of the toilet fill valve.

First, regarding *Horad*, the Office Action states that "the portion extending between member 18 and the toilet file valve, which fully met the bowl fill outlet as claimed, appears to be integrally molded therebetween and radially extending."

Applicants submit that tube 18 is ***not*** "a bowl fill outlet port radially extending from a portion of a body of the toilet fill valve" that comprises "an

integrally molded portion of the body of the toilet fill valve," and therefore does not fully meet the bowl fill outlet as recited in independent claims 1 and 18 . Even assuming, for the sake of argument, that tube 18 is connected to an outlet port of the main valve 14, *Horad* does not disclose or suggest "the bowl fill outlet port comprising an ***integrally molded portion of the body of the toilet fill valve***" as recited in claims 1 and 18. Nor does the Office Action even allege that *Horad* teaches or suggests the claimed feature.

The addition of *Robinson*, *Bjerke*, and/or *Mueller* does not cure the deficiency of the rejection of claims 1 and 18 in view of *Horad*. The *Robinson*, *Bjerke*, and *Mueller* references do not mention toilet fill valves, much less disclose or suggest "the bowl fill outlet port comprising an integrally molded portion of the body of the toilet fill valve." Thus, *Horad* in view of *Robinson*, *Bjerke*, and *Mueller* does not disclose or suggest "a bowl fill outlet port radially extending from a portion of a body of the toilet fill valve… the bowl fill outlet port comprising an integrally molded portion of the body of the toilet fill valve" as recited in claims 1 and 18.

b. *Horad* does not teach the claimed "bowl fill outlet port further comprising a first thread."

Additionally, Applicants submit that *Horad* does not disclose or suggest "the bowl fill outlet port further comprising a first thread" as recited in claims 1 and 18. *Horad* does not disclose or suggest that the nipples 70 and 72 are a "bowl fill outlet port comprising an integrally molded portion of the body of the toilet fill valve." Nor does *Horad* teach or suggest that a bowl fill outlet port includes nipples 70 and 72. As is well established in the law, the claims must be

considered ***as a whole***. Hartness International, Inc. v. Simplimatic Engineering Co., 819 F.2d 1100, 2 USPQ2d 1826 (Fed. Cir. 1987) (In determining obviousness, "the inquiry is not whether each element existed in the prior art, but whether the prior art made obvious the invention as a whole for which patentability is claimed"). Claim terms are not interpreted in a vacuum, devoid of the context of the claim as a whole. See Hockerson-Halberstadt, Inc. v. Converse Inc., 183 F.3d 1369, 1374 (Fed. Cir. 1999) ("proper claim construction ... demands interpretation of the entire claim in context, not a single element in isolation."); ACTV, Inc. v. Walt Disney Co., 346 F.3d 1082, 1088 (Fed. Cir. 2003) ("While certain terms may be at the center of the claim construction debate, the context of the surrounding words of the claim also must be considered....").

The addition of *Robinson*, *Bjerke*, and/or *Mueller* does not cure the deficiency of the rejection in view of *Horad*, nor does the Office Action rely on *Robinson*, *Bjerke*, or *Mueller* to disclose this feature. Thus, *Horad* in view of *Robinson*, *Bjerke*, and *Mueller* does not disclose or suggest "a bowl fill outlet port radially extending from a portion of a body of the toilet fill valve… the bowl fill outlet port comprising an integrally molded portion of the body of the toilet fill valve… the bowl fill outlet port further comprising a first thread" as recited in claims 1 and 18.

c. *Horad* and the other references do not teach the claimed compatibility of the bowl fill ports.

Further, Applicants submit that *Horad* in combination with *Robinson*, *Bjerke*, and/or *Mueller* do not teach or suggest "the bowl fill valve inlet port is compatible with the bowl fill outlet port and the bowl fill valve inlet port being

directly coupled to the bowl fill outlet port and establishing direct contact between the bowl fill outlet port and the bowl fill valve inlet port, wherein the bowl fill valve inlet port and the bowl fill valve outlet port each comprise an integrally molded portion of the bowl fill valve" as recited in claims 1 and 18. In fact, the Office Action does not even allege that the cited references disclose or suggest the features of "the bowl fill valve inlet port is compatible with the bowl fill outlet port and the bowl fill valve inlet port being directly coupled to the bowl fill outlet port and establishing direct contact between the bowl fill outlet port and the bowl fill valve inlet port" and "the first thread being engaged with the second thread and affixing the bowl fill valve inlet port to the bowl fill outlet port." Nor does the Office Action indicate how the cited references, either individually or in combination, teach or suggest this feature. "35 U.S.C. 132 requires that the applicant be notified of the reasons for the rejection of the claim so that he or she can decide how best to proceed." MPEP § 2141(II). As provided in 37 C.F.R. 1.104(c)(2), "In rejecting claims for want of novelty or for obviousness… the particular part relied on must be designated as nearly as practicable." Thus, for at least the reason that the Office Action fails to articulate a finding that the cited references include each element claimed, Applicants submit that a *prima facie* case of obviousness has not been established using the art of record.

d. The rejection of claims 1 and 18 based on *Horad* is improper.

Consequently, the rejection of claims 1 and 18 under 35 U.S.C. §103 as being obvious based on *Horad* in view of *Robinson*, *Bjerke*, and *Mueller* is improper, because none of these combinations of references disclose, teach, or

suggest (either implicitly or explicitly) all elements, features, and steps of claims 1 and 18. *See, e.g., Dow*, 5 U.S.P.Q.2d at 1531; *Keller*, 208 U.S.P.Q.2d at 881. The rejection is similarly not based on any ***objective*** teachings in these references or generally available knowledge of one of ordinary skill in the art that would lead that individual to the invention claimed in claims 1 and 18. In re Fine, 837 F.2d at 1074.

In addition, the Office Action at page 2 merely presumes that "[w]hether the bowl fill valve 40 of *Horad* [is] directly coupled to the bowl fill outlet port and establishing direct contact therebetween would obviously be a mere design choice" and that "first and second threads as claimed are well known equivalent joint connection which one of ordinary skill in the art would not have a problem substitut[ing] in if not already." However, the Office Action rejection fails to evaluate such "substitution" in terms of the whole invention of claims 1 and 18, "including whether the cited prior art provides any teaching or suggestion to one of ordinary skill in the art to make the changes that would produce the patentee's . . . device." *See* Northern Telecom, Inc. v. Datapoint Corp., 908 F.2d 931, 935, 15 U.S.P.Q.2D (BNA) 1321, 1324 (Fed. Cir.), cert. denied, 498 U.S. 920, 112 L. Ed. 2d 250, 111 S. Ct. 296 (1990). This requirement applies equally to what could be characterized as even simple changes. In re Gordon, 733 F.2d 900, 902, 221 U.S.P.Q. (BNA) 1125, 1127 (Fed. Cir. 1984). The Office Action does not identify any teaching, suggestion or other reasoning that would lead one of ordinary skill in the art to modify the *Horad* teachings to incorporate any of *Robinson*, *Bjerke*, or *Mueller*.

It appears that the only reasoning comes from Applicants' own disclosure. Applicants respectfully submit that "it is impermissible to use the claimed invention as an instruction manual or 'template' to piece together the teaching of the prior art so that the claimed invention is rendered obvious. … 'One cannot use hindsight reconstruction to pick and choose among isolated disclosures in the prior art to deprecate the claimed invention.'" In re Fritch, 972 F.2d 1260, 1266, 23 USPQ2d 1780, 1784 (Fed. Cir. 1992). As is well established in the law, such hindsight to the Applicants' own disclosure is *per se* improper. See Crown Operations International, Ltd. v. Solutia, Inc., 289 F.3d 1367, 62 USPQ2d 1917 (Fed. Cir. 2002) (a determination of obviousness cannot be based on a hindsight combination of components selectively culled from the prior art to fit the parameters of the invention); In re McLaughlin, 443 F.2d 1392, 1395 (CCPA 1971) ("[A]ny judgment on obviousness is in a sense necessarily a reconstruction based on hindsight reasoning, but so long as it … does not include knowledge gleaned only from applicant's disclosure, such a reconstruction is proper").

Applicants have described the significance of "the fact that the bowl fill valve 109 is integral with the toilet fill valve 100 prevents the creation of a pressure head in the tube 146 as would be the case if the bowl fill valve 109 were included in the middle of the tube 146. " The fact that a pressure head is not created in any portion of the tube 146 prevents the tube 146 from working its way off of the bowl fill valve outlet 116 over time. As a result, whether the bowl fill valve is directly coupled to the bowl fill outlet port is ***not*** merely a matter of "design choice." *See* In re Chu, 66 F.3d 292, 298 (Fed. Cir. 1995); In re Gal,

980 F.2d 717, 25 U.S.P.Q.2D (BNA) 1076 (Fed. Cir. 1992) (finding of "obvious design choice" precluded where the claimed structure and the function it performs are different from the prior art).

2. Dependent claims 2-7

Because independent claim 1 is allowable over *Horad* in view of *Robinson*, *Bjerke*, or *Mueller* , Applicants respectfully submit that claims 2-7 are allowable for at least the reason that each depends from claim 1. *In re Fine*, 837 F.2d 1071, 5 U.S.P.Q. 2d 1596, 1598 (Fed. Cir. 1988). Therefore, Applicants respectfully request that the rejection of claims 2-7 be withdrawn.

3. Independent claim 19

Applicants submit that *Horad* in view of any of *Robinson*, *Bjerke*, or *Mueller* does not teach or suggest “coupling a bowl fill valve inlet port of a bowl fill valve directly to the bowl fill outlet port by mating a first thread associated with the bowl fill outlet port with a second thread associated with the bowl fill valve inlet port, wherein the bowl fill valve inlet port is affixed to the bowl fill outlet port via the first and second threads, the bowl fill valve inlet port being compatible with the bowl fill outlet port” as recited in amended claim 19. Nowhere does the Office Action allege that these cited references disclose or suggest the features of the bowl fill valve inlet port directly coupling to the bowl fill outlet port by mating a first thread associated with the bowl fill outlet port with a second thread associated with the bowl fill valve inlet port” or the bowl fill valve inlet port is affixed to the bowl fill outlet port via the first and second threads.” Nor does the Office Action indicate how the cited references, either individually or in

combination, teach or suggest this feature. "35 U.S.C. 132 requires that the applicant be notified of the reasons for the rejection of the claim so that he or she can decide how best to proceed." MPEP § 2141(II). As provided in 37 CFR 1.104(c)(2), "In rejecting claims for want of novelty or for obviousness… the particular part relied on must be designated as nearly as practicable." Thus, for at least the reason that the Office Action fails to articulate a finding that the cited reference includes each element claimed, Applicants submit that a prima facie case of obviousness has not been established using the art of record.

As to the Office Action's conclusory allegation at page 5 that the method as claimed "would be inherent during normal assembly," *Horad* in view of *Robinson*, *Bjerke*, and *Mueller* does not disclose or suggest "coupling a bowl fill valve inlet port of a bowl fill valve directly to the bowl fill outlet port by mating a first thread associated with the bowl fill outlet port with a second thread associated with the bowl fill valve inlet port, wherein the bowl fill valve inlet port is affixed to the bowl fill outlet port via the first and second threads." Instead, *Horad* teaches that "the main valve 14 is connected by first a tube 18 to a secondary valve 20" (col. 2, lines 9-10). The Office Action has not provided any reasoning or identified any extrinsic evidence as to why the claimed features are necessarily present in light of the teachings of the cited references. As stated in MPEP § 2112, "'In relying upon the theory of inherency, the examiner ***must provide a basis in fact and/or technical reasoning*** to reasonably support the determination that the allegedly inherent characteristic ***necessarily*** flows from the teachings of the applied prior art.' Ex parte Levy, 17 USPQ2d 1461, 1464

(Bd. Pat. App. & Inter. 1990) (emphasis in original)". "To establish inherency, the extrinsic evidence 'must make clear that the missing descriptive matter is necessarily present in the thing described in the reference, and that it would be so recognized by persons of ordinary skill. Inherency, however, may not be established by probabilities or possibilities. The mere fact that a certain thing may result from a given set of circumstances is not sufficient.' " In re Robertson, 169 F.3d 743, 745, 49 USPQ2d 1949, 1950-51 (Fed. Cir. 1999) (citations omitted).

4. Dependent claim 26

Because independent claim 19 is allowable over *Horad* in view of *Robinson*, *Bjerke*, or *Mueller* and *DeMarco* in view of *Robinson*, *Bjerke*, or *Mueller*, Applicants respectfully submit that claim 26 is allowable for at least the reason that it depends from claim 19. *In re Fine*, 837 F.2d 1071, 5 U.S.P.Q. 2d 1596, 1598 (Fed. Cir. 1988). In addition, as set forth herein above, neither *Horad* nor *DeMarco* in conjunction with any of *Robinson*, *Bjerke*, or *Mueller* teach the "bowl fill outlet port" that "comprises an integrally molded portion of the body of the toilet fill valve" claimed in claim 26. Therefore, Applicants respectfully request that the rejection of claim 26 be withdrawn and that the Examiner enter and allow the above claims.

B. The *DeMarco* Reference

The Office Action collectively bases the rejection of Claims 1-7, 18, 19 and 26 on the premise that *DeMarco* teaches all of the limitations of said claims except for the specific type of coupling claimed therein, which is allegedly taught

by *Robinson*, *Bjerke* or *Mueller*, but does not specify where in any of these three additional references such coupling type is taught. The Office Action further summarily states that "it would be obvious to one of ordinary skill in the art, at the time the invention was made to modify the connection coupling type of *DeMarco* in view of the teaching of *Robinson*, *Bjerke* or *Mueller*. Moreover, the Office Action further states that "the method as claimed would be inherent" in view of *Robinson*, *Bjerke* or *Mueller*," but does not provide any particular reasoning in support of these conclusions or identify any teaching or suggestion to one of ordinary skill in the art to combine *DeMarco* with *Robinson*, *Bjerke* or *Mueller* to obviate Applicant's claims. Lastly, the Office Action states that the coupling claimed in claims 1-7, 18, 19, and 26 "would obviously be a mere design choice," without any substantiation of how or why a person of ordinary skill in the art would select the claimed coupling in view of *DeMarco*, *Robinson*, *Bjerke* or *Mueller*. See In re Dembiczak, 175 F.3d at 1000; see also, In re Chu, 66 F.3d at 299; Total Containment, 1999 U.S. App. LEXIS 22072 at *12-14.

1. Independent Claims 1 and 18

a. *DeMarco* does not teach a bowl fill outlet port radially extending from a portion of a body of the toilet fill valve that comprises an integrally molded portion of the body of the toilet fill valve.

First, regarding *DeMarco*, the Office Action states that "the portion extending between member 22 and the toilet fill valve 18, which fully met the bowl fill outlet as claimed, appears to be integrally molded therebetween and radially extending."

Applicants submit that reseal hose 22 is ***not*** "a bowl fill outlet port radially extending from a portion of a body of the toilet fill valve" that comprises "an integrally molded portion of the body of the toilet fill valve" as recited in claims 1 and 18. Even assuming, for the sake of argument, that reseal hose 22 is connected to an outlet port of the water control assembly 18, *DeMarco* does not disclose or suggest "the bowl fill outlet port comprising an ***integrally molded portion of the body of the toilet fill valve***" as recited in claims 1 and 18. Nor does the Office Action even allege that *DeMarco* teaches or suggests the claimed feature.

The addition of *Robinson*, *Bjerke*, and/or *Mueller* does not cure the deficiency of the rejection in view of *DeMarco*. The *Robinson*, *Bjerke*, and *Mueller* references do not mention toilet fill valves, much less disclose or suggest "the bowl fill outlet port comprising an integrally molded portion of the body of the toilet fill valve." Thus, *DeMarco* in view of *Robinson*, *Bjerke*, and *Mueller* does not disclose or suggest "a bowl fill outlet port radially extending from a portion of a body of the toilet fill valve… the bowl fill outlet port comprising an integrally molded portion of the body of the toilet fill valve" as recited in claims 1 and 18.

b. <u>*DeMarco* does not teach the claimed "bowl fill outlet port further comprising a first thread."</u>

Additionally, Applicants submit that *DeMarco* does not disclose or suggest "the bowl fill outlet port further comprising a first thread" as recited in claim 1. *DeMarco* does not mention threads, much less disclose or suggest the bowl fill outlet port including a thread. Nor does the Office Action even allege that this feature is taught by *DeMarco*. The addition of *Robinson*, *Bjerke*, and *Mueller* does

not cure the deficiency of the rejection in view of *DeMarco*, nor does the Office Action rely on *Robinson*, *Bjerke*, or *Mueller* to disclose this feature. Thus, *DeMarco* in view of *Robinson*, *Bjerke*, and *Mueller* does not disclose or suggest "a bowl fill outlet port radially extending from a portion of a body of the toilet fill valve… the bowl fill outlet port comprising an integrally molded portion of the body of the toilet fill valve… the bowl fill outlet port further comprising a first thread" as recited in claims 1 and 18.

c. *DeMarco* and the other references do not teach the claimed compatibility of the bowl fill ports.

Further, Applicants submit that the *DeMarco* in combination with *Robinson*, *Bjerke*, and/or *Mueller* do not teach or suggest "the bowl fill valve inlet port is compatible with the bowl fill outlet port and the bowl fill valve inlet port being directly coupled to the bowl fill outlet port and establishing direct contact between the bowl fill outlet port and the bowl fill valve inlet port, wherein the bowl fill valve inlet port and the bowl fill valve outlet port each comprise an integrally molded portion of the bowl fill valve" as recited in claims 1 and 18. To begin, the Office Action does not even allege that the cited references disclose or suggest the features of "the bowl fill valve inlet port is compatible with the bowl fill outlet port and the bowl fill valve inlet port being directly coupled to the bowl fill outlet port and establishing direct contact between the bowl fill outlet port and the bowl fill valve inlet port" and "the first thread being engaged with the second thread and affixing the bowl fill valve inlet port to the bowl fill outlet port" (emphasis added). Nor does the Office Action indicate how the cited references, either individually or in combination, teach or suggest this feature. "35 U.S.C. 132 requires that the

applicant be notified of the reasons for the rejection of the claim so that he or she can decide how best to proceed." MPEP § 2141(II). As provided in 37 CFR 1.104(c)(2), "In rejecting claims for want of novelty or for obviousness… the particular part relied on must be designated as nearly as practicable." Thus, for at least the reason that the Office Action fails to articulate a finding that the cited reference includes each element claimed, Applicants submit that a *prima facie* case of obviousness has not been established using the art of record.

d. The rejection of claims 1 and 18 based on *DeMarco* is improper.

Consequently, the rejection of claims 1 and 18 under 35 U.S.C. §103 as being obvious based on *DeMarco* in view of *Robinson*, *Bjerke*, and *Mueller* is improper, because none of these combinations of references disclose, teach, or suggest (either implicitly or explicitly) all elements, features, and steps of claims 1 and 18. *See, e.g., Dow*, 5 U.S.P.Q.2d at 1531; *Keller*, 208 U.S.P.Q.2d at 881. The rejection is similarly not based on any objective teachings in these references art or generally available knowledge of one of ordinary skill in the art that would lead that individual to the invention claimed in claims 1 and 18. In re Fine, 837 F.2d at 1074.

In addition, the Office Action at pages 2-3 merely presumes that "[w]hether the bowl fill valve 36 of *DeMarco* [is] directly coupled to the bowl fill outlet port and establishing direct contact therebetween would obviously be a mere design choice" and that "first and second threads as claimed are well known equivalent joint connection which one of ordinary skill in the art would not have a problem substitut[ing] in if not already." However, the Office Action rejection fails to

evaluate such "substitution" in terms of the whole invention of claims 1 and 18, "including whether the cited prior art provides any teaching or suggestion to one of ordinary skill in the art to make the changes that would produce the patentee's . . . device." *See* Northern Telecom, 908 F.2d at 935. This requirement applies equally to what could be characterized as even simple changes. Gordon, 733 F.2d at 902. The Office Action does not identify any teaching, suggestion or other reasoning that would lead one of ordinary skill in the art to modify the *DeMarco* teachings to incorporate any of *Robinson*, *Bjerke*, or *Mueller*.

It appears, here, that the only reasoning comes from Applicants' own disclosure, and that it is impermissible to use the claimed invention as a template to piece together the teaching of the prior art references so that the invention of claims 1 and 18 is rendered obvious. Fritch, 972 F.2d at 1266. Such hindsight to the Applicants' own disclosure is *per se* improper. See Crown, 289 F.3d 1367 (a determination of obviousness cannot be based on a hindsight combination of components selectively culled from the prior art to fit the parameters of the invention); In re McLaughlin, 443 F.2d at1395 (CCPA 1971) ("[A]ny judgment on obviousness is in a sense necessarily a reconstruction based on hindsight reasoning, but so long as it … does not include knowledge gleaned only from applicant's disclosure, such a reconstruction is proper").

It is clear that Applicants have described the significance of "the fact that the bowl fill valve 109 is integral with the toilet fill valve 100 prevents the creation of a pressure head in the tube 146 as would be the case if the bowl fill valve 109 were included in the middle of the tube 146." The fact that a pressure head is not

created in any portion of the tube 146 prevents the tube 146 from working its way off of the bowl fill valve outlet 116 over time. As a result, whether the bowl fill valve is directly coupled to the bowl fill outlet port is not been merely a matter of "design choice." *See* Chu, 66 F.3d at 298 (Fed. Cir. 1995); Gal, 980 F.2d 717 (finding of "obvious design choice" precluded where the claimed structure and the function it performs are different from the prior art).

2. Dependent claims 2-7

Because independent claim 1 is allowable over *DeMarco* in view of *Robinson*, *Bjerke*, or *Mueller*, Applicants respectfully submit that claims 2-7 are allowable for at least the reason that each depends from claim 1. In re Fine, 837 F.2d 1071, 5 U.S.P.Q. 2d 1596, 1598 (Fed. Cir. 1988). Therefore, Applicants respectfully request that the rejection of claims 2-7 be withdrawn.

3. Independent claim 19

Applicants submit that *DeMarco* in view of *Robinson*, *Bjerke*, or *Mueller* does not teach or suggest “coupling a bowl fill valve inlet port of a bowl fill valve directly to the bowl fill outlet port by mating a first thread associated with the bowl fill outlet port with a second thread associated with the bowl fill valve inlet port, wherein the bowl fill valve inlet port is affixed to the bowl fill outlet port via the first and second threads, the bowl fill valve inlet port being compatible with the bowl fill outlet port” as recited in amended claim 19. To begin, the Office Action does not even allege that the cited references disclose or suggest the features of the bowl fill valve inlet port directly coupling to the bowl fill outlet port by mating a first thread associated with the bowl fill outlet port with a second thread associated

with the bowl fill valve inlet port" or the bowl fill valve inlet port is affixed to the bowl fill outlet port via the first and second threads." Nor does the Office Action indicate how the cited references, either individually or in combination, teach or suggest this feature. "35 U.S.C. 132 requires that the applicant be notified of the reasons for the rejection of the claim so that he or she can decide how best to proceed." MPEP § 2141(II). As provided in 37 C.F.R. 1.104(c)(2), "In rejecting claims for want of novelty or for obviousness… the particular part relied on must be designated as nearly as practicable." Thus, for at least the reason that the Office Action fails to articulate a finding that the cited reference includes each element claimed, Applicants submit that a prima facie case of obviousness has not been established using the art of record.

As to the Office Action's conclusory allegation at page 6 that the method as claimed "would be inherent during normal assembly," *Horad* in view of Robinson, Bjerke, and Mueller does not disclose or suggest "coupling a bowl fill valve inlet port of a bowl fill valve directly to the bowl fill outlet port by mating a first thread associated with the bowl fill outlet port with a second thread associated with the bowl fill valve inlet port, wherein the bowl fill valve inlet port is affixed to the bowl fill outlet port via the first and second threads." Instead, Horad teaches that "the main valve 14 is connected by first a tube 18 to a secondary valve 20" (col. 2, lines 9-10). The Office Action has not provided any reasoning or identified any extrinsic evidence as to why the claimed features are necessarily present in light of the teachings of the cited references. As stated in MPEP § 2112, "'In relying upon the theory of inherency, the examiner ***must***

provide a basis in fact and/or technical reasoning to reasonably support the determination that the allegedly inherent characteristic ***necessarily*** flows from the teachings of the applied prior art.' (citation omitted)". "To establish inherency, the extrinsic evidence 'must make clear that the missing descriptive matter is necessarily present in the thing described in the reference, and that it would be so recognized by persons of ordinary skill. Inherency, however, may not be established by probabilities or possibilities. The mere fact that a certain thing may result from a given set of circumstances is not sufficient.' " Robertson, 169 F.3d 743 at 745.

4. Dependent claim 26

Because independent claim 19 is allowable over *DeMarco* in view of Robinson, *Bjerke*, or *Mueller*, Applicants respectfully submit that claim 26 is allowable for at least the reason that it depends from claim 19. In re Fine, 837 F.2d 1071, 5 U.S.P.Q. 2d 1596, 1598 (Fed. Cir. 1988). In addition, as set forth herein above, neither *DeMarco* nor *DeMarco* in conjunction with any of *Robinson*, *Bjerke*, or *Mueller* teach the "bowl fill outlet port" that "comprises an integrally molded portion of the body of the toilet fill valve" claimed in claim 26. Therefore, Applicants respectfully request that the rejection of claim 26 be withdrawn and that the Examiner enter and allow the above new claims.
Therefore, Applicants respectfully request that the rejection of claim 26 be withdrawn and that the Examiner enter and allow the above new claims.

CONCLUSION

It is requested that all outstanding objections and rejections be withdrawn and that this application and all presently pending claims be allowed to issue. If the Examiner has any questions or comments regarding this Response, the Examiner is encouraged to telephone the undersigned counsel of Applicants.

Respectfully submitted,

/Michael J. D'Aurelio/

Michael J. D'Aurelio
Registration Number: 40,977

Thomas, Kayden, Horstemeyer & Risley, L.L.P.
400 Interstate North Pkwy SE
Suite 1500
Atlanta, Georgia 30339
Phone: (770) 933-9500
Fax: (770) 951-0933

PTO/SB/22 (07-09)
Approved for use through 07/31/2012. OMB 0651-0031
U.S. Patent and Trademark Office; U.S. DEPARMENT OF COMMERCE
Under the paperwork Reduction Act of 1995, no persons are required to respond to a collection of information unless it displays a valid OMB control number.

PETITION FOR EXTENSION OF TIME UNDER 37 CFR 1.136(a) **FY 2009** (*Fees pursuant to the Consolidated Appropriations Act, 2005 (H.R. 4818).*)	Docket Number (Optional) 171901-1032
Application Number 12/786,904	Filed May 25, 2010
For Toilet Fill Valve with Adjustable Bowl Fill Flow	
Art Unit 3751	Examiner Tuan N. Nguyen

This is a request under the provisions of 37 CFR 1.136(a) to extend the period for filing a reply in the above identified application.

The requested extension and fee are as follows (check time period desired and enter the appropriate fee below):

		Fee	Small Entity Fee	
☑	One month (37 CFR 1.17(a)(1))	$130	$65	$ 65
☐	Two months (37 CFR 1.17(a)(2))	$490	$245	$
☐	Three months (37 CFR 1.17(a)(3))	$1110	$555	$
☐	Four months (37 CFR 1.17(a)(4))	$1730	$865	$
☐	Five months (37 CFR 1.17(a)(5))	$2350	$1175	$

☑ Applicant claims small entity status. See 37 CFR 1.27.

☐ A check in the amount of the fee is enclosed.

☑ Payment by credit card. Form PTO-2038 is attached.

☐ The Director has already been authorized to charge fees in this application to a Deposit Account.

☑ The Director is hereby authorized to charge any fees which may be required, or credit any overpayment, to Deposit Account Number 20-0778.

WARNING: Information on this form may become public. Credit card information should not be included on this form. Provide credit card information and authorization on PTO-2038.

I am the

☐ applicant/inventor.

☐ assignee of record of the entire interest. See 37 CFR 3.71.
Statement under 37 CFR 3.73(b) is enclosed (Form PTO/SB/96).

☐ attorney or agent of record. Registration Number _____

☑ attorney or agent under 37 CFR 1.34.
Registration number if acting under 37 CFR 1.34 40,977

/Michael J. D'Aurelio/	September 13, 2011
Signature	Date
Michael J. D'Aurelio	770-933-9500
Typed or printed name	Telephone Number

NOTE: Signatures of all the inventors or assignees of record of the entire interest or their representative(s) are required. Submit multiple forms if more than one signature is required, see below.

☐ Total of _____ forms are submitted.

This collection of information is required by 37 CFR 1.136(a). The information is required to obtain or retain a benefit by the public which is to file (and by the USPTO to process) an application. Confidentiality is governed by 35 U.S.C. 122 and 37 CFR 1.11 and 1.14. This collection is estimated to take 6 minutes to complete, including gathering, preparing, and submitting the completed application form to the USPTO. Time will vary depending upon the individual case. Any comments on the amount of time you require to complete this form and/or suggestions for reducing this burden, should be sent to the Chief Information Officer, U.S. Patent and Trademark Office, U.S. Department of Commerce, P.O. Box 1450, Alexandria, VA 22313-1450. DO NOT SEND FEES OR COMPLETED FORMS TO THIS ADDRESS. **SEND TO: Commissioner for Patents, P.O. Box 1450, Alexandria, VA 22313-1450.**

If you need assistance in completing the form, call 1-800-PTO-9199 and select option 2.

Privacy Act Statement

The Privacy Act of 1974 (P.L. 93-579) requires that you be given certain information in connection with your submission of the attached form related to a patent application or patent. Accordingly, pursuant to the requirements of the Act, please be advised that: (1) the general authority for the collection of this information is 35 U.S.C. 2(b)(2); (2) furnishing of the information solicited is voluntary; and (3) the principal purpose for which the information is used by the U.S. Patent and Trademark Office is to process and/or examine your submission related to a patent application or patent. If you do not furnish the requested information, the U.S. Patent and Trademark Office may not be able to process and/or examine your submission, which may result in termination of proceedings or abandonment of the application or expiration of the patent.

The information provided by you in this form will be subject to the following routine uses:

1. The information on this form will be treated confidentially to the extent allowed under the Freedom of Information Act (5 U.S.C. 552) and the Privacy Act (5 U.S.C 552a). Records from this system of records may be disclosed to the Department of Justice to determine whether disclosure of these records is required by the Freedom of Information Act.
2. A record from this system of records may be disclosed, as a routine use, in the course of presenting evidence to a court, magistrate, or administrative tribunal, including disclosures to opposing counsel in the course of settlement negotiations.
3. A record in this system of records may be disclosed, as a routine use, to a Member of Congress submitting a request involving an individual, to whom the record pertains, when the individual has requested assistance from the Member with respect to the subject matter of the record.
4. A record in this system of records may be disclosed, as a routine use, to a contractor of the Agency having need for the information in order to perform a contract. Recipients of information shall be required to comply with the requirements of the Privacy Act of 1974, as amended, pursuant to 5 U.S.C. 552a(m).
5. A record related to an International Application filed under the Patent Cooperation Treaty in this system of records may be disclosed, as a routine use, to the International Bureau of the World Intellectual Property Organization, pursuant to the Patent Cooperation Treaty.
6. A record in this system of records may be disclosed, as a routine use, to another federal agency for purposes of National Security review (35 U.S.C. 181) and for review pursuant to the Atomic Energy Act (42 U.S.C. 218(c)).
7. A record from this system of records may be disclosed, as a routine use, to the Administrator, General Services, or his/her designee, during an inspection of records conducted by GSA as part of that agency's responsibility to recommend improvements in records management practices and programs, under authority of 44 U.S.C. 2904 and 2906. Such disclosure shall be made in accordance with the GSA regulations governing inspection of records for this purpose, and any other relevant (i.e., GSA or Commerce) directive. Such disclosure shall not be used to make determinations about individuals.
8. A record from this system of records may be disclosed, as a routine use, to the public after either publication of the application pursuant to 35 U.S.C. 122(b) or issuance of a patent pursuant to 35 U.S.C. 151. Further, a record may be disclosed, subject to the limitations of 37 CFR 1.14, as a routine use, to the public if the record was filed in an application which became abandoned or in which the proceedings were terminated and which application is referenced by either a published application, an application open to public inspection or an issued patent.
9. A record from this system of records may be disclosed, as a routine use, to a Federal, State, or local law enforcement agency, if the USPTO becomes aware of a violation or potential violation of law or regulation.

Electronic Patent Application Fee Transmittal

Application Number:	12786904
Filing Date:	25-May-2010
Title of Invention:	Toilet Fill Valve with Adjustable Bowl Fill Flow
First Named Inventor/Applicant Name:	Michael J. Schuster
Filer:	Thomas Bernard Hildebrandt/Sofia Safina
Attorney Docket Number:	171901-1032

Filed as Small Entity

Utility under 35 USC 111(a) Filing Fees

Description	Fee Code	Quantity	Amount	Sub-Total in USD($)
Basic Filing:				
Pages:				
Claims:				
Miscellaneous-Filing:				
Petition:				
Patent-Appeals-and-Interference:				
Post-Allowance-and-Post-Issuance:				
Extension-of-Time:				
Extension - 1 month with $0 paid	2251	1	65	65

Description	Fee Code	Quantity	Amount	Sub-Total in USD($)
Miscellaneous:				
			Total in USD ($)	**65**

Electronic Acknowledgement Receipt

EFS ID:	10940957
Application Number:	12786904
International Application Number:	
Confirmation Number:	3473
Title of Invention:	Toilet Fill Valve with Adjustable Bowl Fill Flow
First Named Inventor/Applicant Name:	Michael J. Schuster
Customer Number:	24504
Filer:	Thomas Bernard Hildebrandt/Sofia Safina
Filer Authorized By:	Thomas Bernard Hildebrandt
Attorney Docket Number:	171901-1032
Receipt Date:	13-SEP-2011
Filing Date:	25-MAY-2010
Time Stamp:	18:47:30
Application Type:	Utility under 35 USC 111(a)

Payment information:

Submitted with Payment	yes
Payment Type	Credit Card
Payment was successfully received in RAM	$65
RAM confirmation Number	5628
Deposit Account	
Authorized User	

File Listing:

Document Number	Document Description	File Name	File Size(Bytes)/ Message Digest	Multi Part /.zip	Pages (if appl.)

1	Amendment After Final	01439655.PDF	168127 8b197e01952eadafb691d73475cf261f3d226910	no	27
Warnings:					
Information:					
2	Extension of Time	01439512.PDF	312546 4961008a7fd58add3ce335cc1225f49cc7712193	no	2
Warnings:					
Information:					
3	Fee Worksheet (SB06)	fee-info.pdf	30106 03436bdc6095bee2737ce1e6924d5b9ca7f2ee4f	no	2
Warnings:					
Information:					
		Total Files Size (in bytes):	510779		

This Acknowledgement Receipt evidences receipt on the noted date by the USPTO of the indicated documents, characterized by the applicant, and including page counts, where applicable. It serves as evidence of receipt similar to a Post Card, as described in MPEP 503.

<u>New Applications Under 35 U.S.C. 111</u>
If a new application is being filed and the application includes the necessary components for a filing date (see 37 CFR 1.53(b)-(d) and MPEP 506), a Filing Receipt (37 CFR 1.54) will be issued in due course and the date shown on this Acknowledgement Receipt will establish the filing date of the application.

<u>National Stage of an International Application under 35 U.S.C. 371</u>
If a timely submission to enter the national stage of an international application is compliant with the conditions of 35 U.S.C. 371 and other applicable requirements a Form PCT/DO/EO/903 indicating acceptance of the application as a national stage submission under 35 U.S.C. 371 will be issued in addition to the Filing Receipt, in due course.

<u>New International Application Filed with the USPTO as a Receiving Office</u>
If a new international application is being filed and the international application includes the necessary components for an international filing date (see PCT Article 11 and MPEP 1810), a Notification of the International Application Number and of the International Filing Date (Form PCT/RO/105) will be issued in due course, subject to prescriptions concerning national security, and the date shown on this Acknowledgement Receipt will establish the international filing date of the application.

UNITED STATES PATENT AND TRADEMARK OFFICE

UNITED STATES DEPARTMENT OF COMMERCE
United States Patent and Trademark Office
Address: COMMISSIONER FOR PATENTS
P.O. Box 1450
Alexandria, Virginia 22313-1450
www.uspto.gov

APPLICATION NO.	FILING DATE	FIRST NAMED INVENTOR	ATTORNEY DOCKET NO.	CONFIRMATION NO.
12/786,904	05/25/2010	Michael J. Schuster	171901-1032	3473

24504 7590 05/13/2011
THOMAS, KAYDEN, HORSTEMEYER & RISLEY, LLP
600 GALLERIA PARKWAY, S.E.
STE 1500
ATLANTA, GA 30339-5994

EXAMINER
NGUYEN, TUAN N

ART UNIT	PAPER NUMBER
3751	

NOTIFICATION DATE	DELIVERY MODE
05/13/2011	ELECTRONIC

Please find below and/or attached an Office communication concerning this application or proceeding.

The time period for reply, if any, is set in the attached communication.

Notice of the Office communication was sent electronically on above-indicated "Notification Date" to the following e-mail address(es):

uspatents@tkhr.com
kristen.layton@tkhr.com
ozzie.liggins@tkhr.com

PTOL-90A (Rev. 04/07)

Office Action Summary	Application No.	Applicant(s)	
	12/786,904	SCHUSTER ET AL.	
	Examiner	Art Unit	
	Tuan N. Nguyen	3751	

-- The MAILING DATE of this communication appears on the cover sheet with the correspondence address --

Period for Reply

A SHORTENED STATUTORY PERIOD FOR REPLY IS SET TO EXPIRE 3 MONTH(S) OR THIRTY (30) DAYS, WHICHEVER IS LONGER, FROM THE MAILING DATE OF THIS COMMUNICATION.

- Extensions of time may be available under the provisions of 37 CFR 1.136(a). In no event, however, may a reply be timely filed after SIX (6) MONTHS from the mailing date of this communication.
- If NO period for reply is specified above, the maximum statutory period will apply and will expire SIX (6) MONTHS from the mailing date of this communication.
- Failure to reply within the set or extended period for reply will, by statute, cause the application to become ABANDONED (35 U.S.C. § 133). Any reply received by the Office later than three months after the mailing date of this communication, even if timely filed, may reduce any earned patent term adjustment. See 37 CFR 1.704(b).

Status

1)☒ Responsive to communication(s) filed on *24 February 2011*.

2a)☒ This action is **FINAL**. 2b)☐ This action is non-final.

3)☐ Since this application is in condition for allowance except for formal matters, prosecution as to the merits is closed in accordance with the practice under *Ex parte Quayle*, 1935 C.D. 11, 453 O.G. 213.

Disposition of Claims

4)☒ Claim(s) *1-7,18,19 and 26* is/are pending in the application.

4a) Of the above claim(s) _____ is/are withdrawn from consideration.

5)☐ Claim(s) _____ is/are allowed.

6)☒ Claim(s) *1-7,18,19 and 26* is/are rejected.

7)☐ Claim(s) _____ is/are objected to.

8)☐ Claim(s) _____ are subject to restriction and/or election requirement.

Application Papers

9)☐ The specification is objected to by the Examiner.

10)☐ The drawing(s) filed on _____ is/are: a)☐ accepted or b)☐ objected to by the Examiner.

Applicant may not request that any objection to the drawing(s) be held in abeyance. See 37 CFR 1.85(a).

Replacement drawing sheet(s) including the correction is required if the drawing(s) is objected to. See 37 CFR 1.121(d).

11)☐ The oath or declaration is objected to by the Examiner. Note the attached Office Action or form PTO-152.

Priority under 35 U.S.C. § 119

12)☐ Acknowledgment is made of a claim for foreign priority under 35 U.S.C. § 119(a)-(d) or (f).

a)☐ All b)☐ Some * c)☐ None of:

1.☐ Certified copies of the priority documents have been received.

2.☐ Certified copies of the priority documents have been received in Application No. _____.

3.☐ Copies of the certified copies of the priority documents have been received in this National Stage application from the International Bureau (PCT Rule 17.2(a)).

* See the attached detailed Office action for a list of the certified copies not received.

Attachment(s)

1) ☐ Notice of References Cited (PTO-892)
2) ☐ Notice of Draftsperson's Patent Drawing Review (PTO-948)
3) ☐ Information Disclosure Statement(s) (PTO/SB/08) Paper No(s)/Mail Date _____.
4) ☐ Interview Summary (PTO-413) Paper No(s)/Mail Date. _____ .
5) ☐ Notice of Informal Patent Application
6) ☐ Other: _____.

Fluidmaster, Inc. - EX1010, Page 055
IPR2024-00633 (Fluidmaster Inc v. Danco Inc)

DETAILED ACTION

Response to Arguments

1. Applicant's arguments filed 2/24/11 have been fully considered but they are not persuasive.

With respect to applicant's argument against the Horad reference, the portion extending between member 18 and the toilet fill valve, which fully met the bowl fill outlet as claimed, appears to be integrally molded therebetween and radially extending. Whether the bowl fill valve 40 of Horad directly coupled to the bowl fill outlet port and establishing direct contact therebetween would obviously be a mere design choice since one skill in the art at the time the invention was made understands that adding a flexible hose like member 18 between the bowl fill outlet port and the bowl fill valve would depend on the distance between the toilet fill valve and the overflow tube 24. The first and second threads as claimed are well known equivalent joint connection which one of ordinary skill in the art would not have a problem substitute in if not already.

With respect to applicant's argument against the DeMarco reference, the portion extending between member 22 and the toilet fill valve 18, which fully met the bowl fill outlet as claimed, appears to be integrally molded therebetween and radially extending. Whether the bowl fill valve 36 of DeMarco directly coupled to the bowl fill outlet port and establishing direct contact therebetween would obviously be a mere design choice since one skill in the art at the time the invention was made understands that adding a flexible hose like member 22 between the bowl fill outlet port and the bowl fill valve would depend on the distance between the toilet fill valve and the overflow tube 24 and the

desired location of the bowl fill valve 36. The first and second threads as claimed are well known equivalent joint connection which one of ordinary skill in the art would not have a problem substitute in if not already.

Claim Rejections - 35 USC § 103

2. The following is a quotation of 35 U.S.C. 103(a) which forms the basis for all obviousness rejections set forth in this Office action:

> (a) A patent may not be obtained though the invention is not identically disclosed or described as set forth in section 102 of this title, if the differences between the subject matter sought to be patented and the prior art are such that the subject matter as a whole would have been obvious at the time the invention was made to a person having ordinary skill in the art to which said subject matter pertains. Patentability shall not be negatived by the manner in which the invention was made.

3. Claims 1-7, 18, 19 and 26 are rejected under 35 U.S.C. 103(a) as being unpatentable over either one of Horad in view of either one of Robinson et al., Bjerke, or Mueller et al.

Horad discloses a toilet fill valve (Fig. 1) comprising a water inlet; a first water outlet configured to supply water to a toilet tank; a bowl fill outlet port-radially extending from a portion of a body of the toilet fill valve, the bowl fill outlet port being operatively coupled to the water inlet; a bowl fill valve (40) having a bowl fill valve inlet port and a bowl fill valve outlet port, wherein the bowl fill valve inlet port is compatible with the bowl fill outlet port and the bowl fill valve inlet port being coupled to the bowl fill outlet port; a tube (22) having a first end attached to the bowl fill valve outlet port and a second end directed into an overflow tube in the toilet tank, wherein a flow of water into the overflow tube is directed to a toilet bowl of the toilet; and the bowl fill valve being configured to supply an adjustable flow of water out the bowl fill outlet port for filling a toilet bowl during a flush cycle of a toilet. The bowl fill valve extends beyond the bowl fill outlet port

in a radial direction with respect to a portion of the body of the toilet fill valve. The bowl fill outlet port (18) further comprises a female receptacle; and the bowl fill valve inlet port further comprises a male end compatible with the female receptacle. The bowl fill valve inlet port further comprises a female receptacle (about 31); and the bowl fill outlet port further comprises a male end (about 76) compatible with the female receptacle. The toilet fill valve further comprises a float (17); an actuating arm coupled to the float, the actuating arm radially extending in an orthogonal direction relative to a longitudinal axis of the toilet fill valve; and the bowl fill valve extending in an orthogonal direction relative to the longitudinal axis of the toilet fill valve, wherein the actuating arm is angularly offset relative to the bowl fill valve, thereby preventing an interference with the bowl fill valve and a translational stern extending from the float to a free end of the actuating arm. The bowl fill valve outlet port further comprises a nipple (see Fig. 2) adapted to mate with an end of a tube (22). The bowl fill valve further comprises a number of biased positions that is rotatable to select different flow rate output. The toilet fill valve further comprises a first thread on a side wall of the bowl fill outlet port (about 76); and a second thread on a side, wall of the bowl fill valve inlet port, wherein the bowl fill valve inlet port is coupled to the bowl fill outlet port via the first and second threads. The Horad reference teaches all of the limitations as discussed above except of having a specific type of connection coupling as claimed. The patent to either one of Robinson et al., Bjerke, or Mueller et al. teaches the above exceptions. In view of the teaching of Robinson et al., Bjerke, or Mueller et al., it would be obvious to one of ordinary skill in the art, at the time the invention was made to modify the connection coupling type of

Hoard in view of the teaching of Robinson et al., Bjerke, or Mueller et al. Such teachings provide no unobvious or unexpected result. Therefore, the method as claimed would be inherent during normal assembly of the DeMarco or Horad in view of either one of Robinson et al., Bjerke, or Mueller et al. device.

4. Claims 1-7, 18, 19 and 26 are rejected under 35 U.S.C. 103(a) as being unpatentable over either one of DeMarco in view of either one of Robinson et al., Bjerke, or Mueller et al.

DeMarco discloses a toilet fill valve (Fig. 1) comprising a water inlet; a first water outlet configured to supply water to a toilet tank; a bowl fill outlet port-radially extending from a portion of a body of the toilet fill valve, the bowl fill outlet port being operatively coupled to the water inlet; a bowl fill valve (36) having a bowl fill valve inlet port and a bowl fill valve outlet port, wherein the bowl fill valve inlet port is compatible with the bowl fill outlet port and the bowl fill valve inlet port being coupled to the bowl fill outlet port; a tube (tube 22 on the right) having a first end attached to the bowl fill valve outlet port and a second end directed into an overflow tube in the toilet tank, wherein a flow of water into the overflow tube is directed to a toilet bowl of the toilet; and the bowl fill valve being configured to supply an adjustable flow of water out the bowl fill outlet port for filling a toilet bowl during a flush cycle of a toilet. The bowl fill valve extends beyond the bowl fill outlet port in a radial direction with respect to a portion of the body of the toilet fill valve. The bowl fill outlet port further comprises a female receptacle (the right side of the left member 22 of Fig. 1); and the bowl fill valve inlet port (about 44) further comprises a male end compatible with the female receptacle. The bowl fill valve inlet

port further comprises a female receptacle (the left side of the left member 22 of Fig. 1); and the bowl fill outlet port further comprises a male end (see Fig. 1) compatible with the female receptacle. The toilet fill valve further comprises a float (34); an actuating arm (32) coupled to the float, the actuating arm radially extending in an orthogonal direction relative to a longitudinal axis of the toilet fill valve; and the bowl fill valve extending in an orthogonal direction relative to the longitudinal axis of the toilet fill valve, wherein the actuating arm is angularly offset relative to the bowl fill valve, thereby preventing an interference with the bowl fill valve and a translational stern extending from the float to a free end of the actuating arm. The bowl fill valve outlet port further comprises a nipple (about 46) adapted to mate with an end of a tube (22). The bowl fill valve further comprises a number of biased positions that is rotatable to select different flow rate output. The DeMarco reference teaches all of the limitations as discussed above except of having a specific type of connection coupling as claimed. The patent to either one of Robinson et al., Bjerke, or Mueller et al. teaches the above exceptions. In view of the teaching of Robinson et al., Bjerke, or Mueller et al., it would be obvious to one of ordinary skill in the art, at the time the invention was made to modify the connection coupling type of DeMarco in view of the teaching of Robinson et al., Bjerke, or Mueller et al. Such teachings provide no unobvious or unexpected result. Therefore, the method as claimed would be inherent during normal assembly of the DeMarco or Horad in view of either one of Robinson et al., Bjerke, or Mueller et al. device.

Conclusion

5. **THIS ACTION IS MADE FINAL.** Applicant is reminded of the extension of time policy as set forth in 37 CFR 1.136(a).

A shortened statutory period for reply to this final action is set to expire THREE MONTHS from the mailing date of this action. In the event a first reply is filed within TWO MONTHS of the mailing date of this final action and the advisory action is not mailed until after the end of the THREE-MONTH shortened statutory period, then the shortened statutory period will expire on the date the advisory action is mailed, and any extension fee pursuant to 37 CFR 1.136(a) will be calculated from the mailing date of the advisory action. In no event, however, will the statutory period for reply expire later than SIX MONTHS from the mailing date of this final action.

6. Any inquiry concerning this communication or earlier communications from the examiner should be directed to Tuan N. Nguyen whose telephone number is 571-272-4892. The examiner can normally be reached on Monday-Friday (10:00-6:00).

If attempts to reach the examiner by telephone are unsuccessful, the examiner's supervisor, Gregory Huson can be reached on (571) 272-4887. The fax phone number for the organization where this application or proceeding is assigned is 571-273-8300.

Information regarding the status of an application may be obtained from the Patent Application Information Retrieval (PAIR) system. Status information for published applications may be obtained from either Private PAIR or Public PAIR. Status information for unpublished applications is available through Private PAIR only. For more information about the PAIR system, see http://pair-direct.uspto.gov. Should you have questions on access to the Private PAIR system, contact the Electronic Business Center (EBC) at 866-217-9197 (toll-free). If you would like assistance from a USPTO Customer Service Representative or access to the automated information system, call 800-786-9199 (IN USA OR CANADA) or 571-272-1000.

/Tuan N Nguyen/
Primary Examiner, Art Unit 3751

TN

IN THE UNITED STATES PATENT AND TRADEMARK OFFICE

In re Application of:		Confirmation No.:	**3473**
Schuster *et al.*		Group Art Unit:	**3751**
Serial No.:	**12/786,904**	Examiner:	**Nguyen, Tuan N**
Filed:	**May 25, 2010**	Docket No.:	**171901-1032**

For: **TOILET FILL VALVE WITH ADJUSTABLE BOWL FILL FLOW**

RESPONSE TO OFFICE ACTION

Mail Stop Amendment
Commissioner for Patents
P.O. Box 1450
Alexandria, VA 22313-1450

Sir:

Applicants submit the following amendments and remarks to the non-final Office Action mailed from the United States Patent and Trademark Office on November 24, 2010 (Paper No. 20101122).

AUTHORIZATION TO DEBIT ACCOUNT

It is not believed that additional fees are required, beyond those which may otherwise be provided for in the documents accompanying this paper. However, in the event that additional fees are necessary to allow consideration of this paper, such extensions are hereby petitioned under 37 C.F.R. §1.136(a), and any fees required (including fees for net additions of claims) are hereby authorized to be charged to 20-0778.

AMENDMENTS TO THE SPECIFICATION

The following is a copy of Applicants' specification that identifies language being added with underlining ("___") and language being deleted with strikethrough ("—"), as is applicable.

Please make the following amendments to the specification:

In paragraph [0048]:

Referring next to FIG. 7, shown is a cutaway view of a coupling 303 between a third embodiment of the bowl fill outlet port 206, denoted herein as bowl fill outlet port 206c and the bowl fill valve inlet port 213 denoted herein as bowl fill valve inlet port 213c. In this respect, the bowl fill outlet port 206c includes a first thread 306 disposed on a side wall 309 of the bowl fill outlet port 206c. A second thread 313 is disposed on a side wall of the bowl fill valve inlet port 213c that engages the first thread 306 disposed in the side wall of the bowl fill outlet port 206c. The bowl fill valve inlet port 213c is coupled to the bowl fill outlet port 206c by way of the first and second threads 306 and 313. Specifically, the bowl fill valve 203 may be screwed onto the bowl fill outlet port 206c by virtue of the threads 306 and 313. When the bowl fill valve inlet port 213c is screwed into the bowl fill valve outlet port 206c, a sealing ring <u>316</u> is clamped between portions of the bowl fill valve inlet port 213c and the bowl fill outlet port 206c such as a seating face 319 of the bowl fill outlet port 206c and an end face 323 of the bowl fill valve inlet port 213c. In this respect, a seal is formed between the bowl fill outlet port 206c and the bowl fill valve inlet port 213c. Alternatively, the threads 306 and 313 may be specified so as to form an adequate seal between the bowl fill valve outlet port 206c and the bowl fill valve inlet port 213c for purposes of preventing leakage. As an additional alternative, the seating face 319 and the end face 323 or other portions of the bowl fill valve inlet port 213c and the bowl fill outlet port 206c may be compressed together to form a seal to prevent leakage. Alternatively, the bowl fill outlet port

206c and the bowl fill valve inlet port 213c may be designed to include mating surfaces that perform a friction seal as can be appreciated. .

AMENDMENTS TO THE CLAIMS

The following is a copy of Applicants' claims that identifies language being added with underlining ("___") and language being deleted with strikethrough ("—"), as is applicable:

1. (Currently Amended) A toilet fill valve, comprising:

a water inlet;

a first water outlet configured to supply water to a toilet tank;

a bowl fill outlet port radially extending from a portion of a body of the toilet fill valve, the bowl fill outlet port being operatively coupled to the water inlet, and the bowl fill outlet port comprising an integrally molded portion of the body of the toilet fill valve;

a bowl fill valve having a bowl fill valve inlet port and a bowl fill valve outlet port, wherein the bowl fill valve inlet port is compatible with the bowl fill outlet port and the bowl fill valve inlet port being directly coupled to the bowl fill outlet port and establishing direct contact between the bowl fill outlet port and the bowl fill valve inlet port, wherein the bowl fill valve inlet port and the bowl fill valve outlet port each comprise an integrally molded portion of the bowl fill valve;

the bowl fill valve being configured to supply an adjustable flow of water out the bowl fill <u>valve</u> outlet port for filling a toilet bowl during a flush cycle of a toilet;

the bowl fill outlet port further comprising a first thread;

the bowl fill valve inlet port further comprising a second thread, the first thread being compatible with the second thread, and the first thread being engaged with the second thread and affixing the bowl fill valve inlet port to the bowl fill outlet port; and

a sealing ring clamped between a portion of the bowl fill outlet port and a portion of the bowl fill valve inlet port to form a seal between the bowl fill outlet port and the bowl fill valve inlet port.

2. (Original) The toilet fill valve of claim 1, wherein bowl fill valve extends beyond the bowl fill outlet port in a radial direction with respect to a portion of the body of the toilet fill valve.

3. (Previously Presented) The toilet fill valve of claim 1, wherein:

the bowl fill outlet port further comprises a female receptacle; and

the bowl fill valve inlet port further comprises a male end.

4. (Previously Presented) The toilet fill valve of claim 1, wherein:

the bowl fill valve inlet port further comprises a female receptacle; and

the bowl fill outlet port further comprises a male end.

5. (Original) The toilet fill valve of claim 1, further comprising:

a float;

an actuating arm coupled to the float, the actuating arm radially extending in an orthogonal direction relative to a longitudinal axis of the toilet fill valve; and

the bowl fill valve extending in an orthogonal direction relative to the longitudinal axis of the toilet fill valve, wherein the actuating arm is angularly offset relative to the bowl fill valve, thereby preventing an interference with the bowl fill valve and a translational stem extending from the float to a free end of the actuating arm.

6. (Original) The toilet fill valve of claim 1, wherein the bowl fill valve outlet port further comprises a nipple adapted to mate with an end of a tube.

7. (Original) The toilet fill valve of claim 1, wherein the bowl fill valve further comprises a number of biased positions.

8-17. (Canceled).

18. (Previously Presented) A toilet with a toilet tank having an adjustable bowl fill water flow, comprising:

a toilet fill valve in the toilet tank, the toilet valve having a water inlet coupled to a water source outside of the toilet tank and a water outlet directing a flow of water into the toilet tank;

a bowl fill outlet port radially extending from a portion of a body of the toilet fill valve, the bowl fill outlet port being operatively coupled to the water inlet and the bowl fill outlet port comprising an integrally molded portion of the body of the toilet fill valve;

a bowl fill valve having a bowl fill valve inlet port and a bowl fill valve outlet port, wherein the bowl fill valve inlet port is compatible with the bowl fill outlet port and the bowl fill valve inlet port being directly coupled to the bowl fill outlet port and establishing direct contact between the bowl fill outlet port and the bowl fill valve inlet port, wherein the bowl fill valve inlet port and the bowl fill valve outlet port each comprise an integrally molded portion of the bowl fill valve;

a tube having a first end attached to the bowl fill valve outlet port and a second end directed into an overflow tube in the toilet tank, wherein a flow of water into the overflow tube is directed to a toilet bowl of the toilet;

the bowl fill valve being configured to supply an adjustable flow of water out the bowl fill valve outlet port through the tube and into the overflow tube for filling the toilet bowl during a flush cycle of a toilet;

the bowl fill outlet port further comprising a first thread;

the bowl fill valve inlet port further comprising a second thread, the first thread being compatible with the second thread, and the first thread being engaged with the second thread and affixing the bowl fill valve inlet port to the bowl fill outlet port; and

a sealing ring clamped between a portion of the bowl fill outlet port and a portion

of the bowl fill valve inlet port to form a seal between the bowl fill outlet port and the bowl fill valve inlet port.

19. (Currently Amended) A method for providing an adjustable bowl fill water flow in a toilet fill valve, comprising the steps of:

operatively coupling a bowl fill outlet port to a water inlet of the toilet fill valve;

radially extending the bowl fill outlet port from a portion of a body of the toilet fill valve; and

coupling a bowl fill valve inlet port of a bowl fill valve directly to the bowl fill outlet port by mating a first thread associated with the bowl fill outlet port with a second thread associated with the bowl fill valve inlet port, wherein the bowl fill valve inlet port is ~~coupled~~ <u>affixed</u> to the bowl fill outlet port via the first and second threads, the bowl fill valve inlet port being compatible with the bowl fill outlet port, and the bowl fill valve being configured to provide for the adjustable bowl fill water flow out a bowl fill valve outlet port of the bowl fill valve for filling a toilet bowl during a flush cycle of a toilet; and

clamping a sealing ring between a portion of the bowl fill valve inlet port and a portion of the bowl fill outlet port

20-25. (Canceled).

26. (New) The method of claim 19, wherein the bowl fill outlet port comprises an integrally molded portion of the body of the toilet fill valve.

REMARKS

This is a full and timely response to the outstanding non-final Office Action mailed November 24, 2010 (Paper No. 20101122). Upon entry of this response, claims 1-7, 18-19, and 26 are pending in the application. In this response, claims 1 and 19 have been amended. Claims 8-17 and 20-25 had been canceled without prejudice, waiver, or disclaimer. Applicants reserve the right to pursue the subject matter of these cancelled claims or variants thereof at a future time, if Applicants so choose, and do not intend to dedicate any of the cancelled subject matter to the public. Claim 26 has been added. Applicants respectfully request that the amendments being filed herewith be entered and request reconsideration and allowance of all pending claims.

I. Claim Rejections under 35 U.S.C. §103(a)

Claims 1-7 and 18-19 have been rejected under 35 U.S.C. § 103(a) as allegedly unpatentable over *Horad* (U.S. Patent No. 5,715,860; hereafter "*Horad*") in view of either one of *Robinson et al.* (U.S. Patent No. 6,409,221; hereafter "*Robinson*"), *Bjerke* (U.S. Patent No. 5,926,868; hereafter "*Bjerke*"), or *Mueller et al.* (U.S. Patent No. 5,624,073; hereafter "*Mueller*"). Alternatively, claims 1-7 and 18-19 have been rejected under 35 U.S.C. § 103(a) as allegedly unpatentable over *DeMarco* (U.S. Patent No. 5,708,991; hereafter "*DeMarco*") in view of either one of *Robinson*, *Bjerke*, or *Mueller*. Applicants respectfully traverse this rejection as applied to pending claims 1-7 and 18-19.

It is well established at law that, for a proper rejection of a claim under 35 U.S.C. §103 as being obvious based upon a combination of references, the cited combination of references must disclose, teach, or suggest (either implicitly or explicitly) all elements/features/steps of the claim at issue. *See, e.g., In re Dow Chemical*, 5 U.S.P.Q.2d 1529, 1531 (Fed. Cir. 1988); *In re Keller*, 208 U.S.P.Q.2d 871, 881 (C.C.P.A. 1981). As has been acknowledged by the Court of

Appeals for the Federal Circuit, the U.S. Patent and Trademark Office ("USPTO") has the burden under 35 U.S.C. § 103 to establish obviousness by showing objective teachings in the prior art or generally available knowledge of one of ordinary skill in the art that would lead that individual to the claimed invention. *In re Fine*, 837 F.2d 1071, 1074, 5 U.S.P.Q. 2d 1596, 1598 (Fed. Cir. 1988).

The key to supporting an allegation of obviousness under 35 U.S.C. § 103 is the clear articulation of the reasons why the Examiner believes that claimed invention would have been obvious. *See* MPEP § 2141. As stated by the Supreme Court, "[R]ejections on obviousness cannot be sustained by mere conclusory statements; instead, there must be some articulated reasoning with some rational underpinning to support the legal conclusion of obviousness." *KSR Int'l Co. v. Teleflex Inc. (KSR)*, 550 U.S. 398, 418, 82 USPQ2d 1385, 1396 (quoting *In re Kahn,* 441 F.3d 977, 988, 78 USPQ2d 1329, 1336 (Fed. Cir. 2006)) (2007). Applicants respectfully submit that a *prima facie* case of obviousness is not established using the art of record.

A. Independent Claim 1

Applicants' claim 1, as amended, provides as follows (emphasis added):

> A toilet fill valve, comprising:
> a water inlet;
> a first water outlet configured to supply water to a toilet tank;
> ***a bowl fill outlet port radially extending from a portion of a body of the toilet fill valve***, the bowl fill outlet port being operatively coupled to the water inlet, and ***the bowl fill outlet port comprising an integrally molded portion of the body of the toilet fill valve***;
> a bowl fill valve having a bowl fill valve inlet port and a bowl fill valve outlet port, wherein ***the bowl fill valve inlet port is compatible with the bowl fill outlet port and the bowl fill valve inlet port being directly coupled to the bowl fill outlet port and establishing direct contact between the bowl fill outlet port and the bowl fill valve inlet port***, wherein the bowl fill valve inlet port and the bowl fill valve outlet port each comprise an integrally molded portion of the bowl fill valve;
> the bowl fill valve being configured to supply an adjustable flow of water out the bowl fill valve outlet port for filling a toilet bowl during a flush cycle of a toilet;
> ***the bowl fill outlet port further comprising a first thread***;

> the bowl fill valve inlet port further comprising a second thread, ***the first thread being compatible with the second thread, and the first thread being engaged with the second thread and affixing the bowl fill valve inlet port to the bowl fill outlet port***; and
>
> a sealing ring clamped between a portion of the bowl fill outlet port and a portion of the bowl fill valve inlet port to form a seal between the bowl fill outlet port and the bowl fill valve inlet port.

Applicants respectfully request that the rejections of independent claim 1 be withdrawn for at least the reason that *Horad* or *DeMarco* in view of either one of *Robinson*, *Bjerke*, or *Mueller* fail to disclose, teach, or suggest at least the features recited and emphasized above in amended claim 1.

Horad* in view of *Robinson, Bjerke,* or *Mueller

The Office Action points to FIG. 1 of *Horad* in support the rejection of claim 1, alleging on page 2 that "a bowl fill valve" corresponds to bracket 40 (col. 2, lines 46-47) and "a bowl fill outlet port" corresponds to tube 18 (col. 2, line 9).

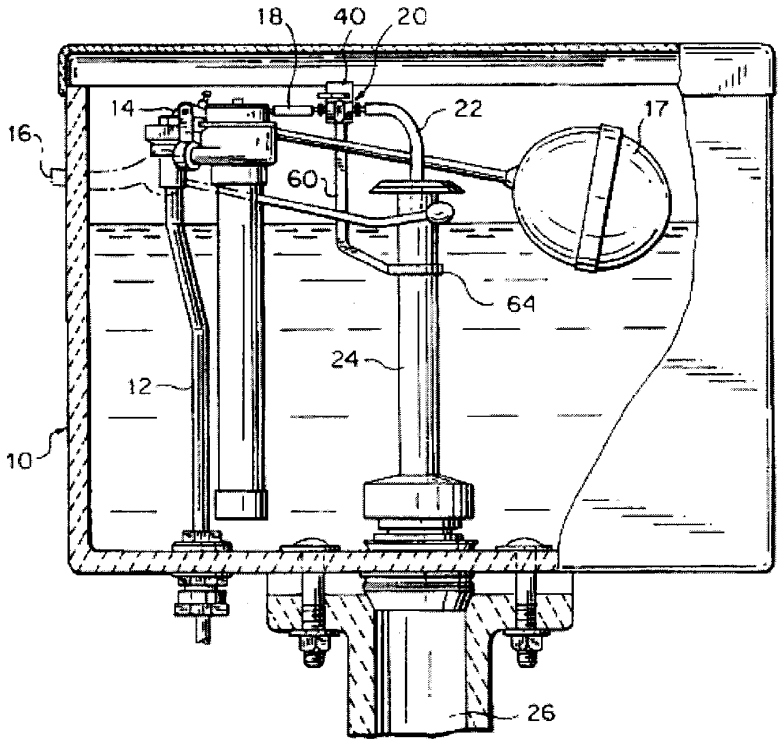

As such, the Office Action appears to allege that "toilet fill valve" corresponds to main valve 14 (col. 2, lines 7-8), "water inlet" corresponds to the connection to water inlet line 12 (col. 2, line 7), and "bowl fill valve" corresponds to secondary valve 20 (col. 2, lines 9-10). Applicants respectfully disagree.

Applicants submit that tube 18 is not "a bowl fill outlet port radially extending from a portion of a body of the toilet fill valve" that comprises "an integrally molded portion of the body of the toilet fill valve" as recited in claim 1. Even assuming, for the sake of argument, that tube 18 is connected to an outlet port of the main valve 14, *Horad* does not disclose or suggest "the bowl fill outlet port comprising an integrally molded portion of the body of the toilet fill valve" as recited in claim 1. Nor does the Office Action even allege that *Horad* teaches or suggests the claimed feature. The addition of *Robinson*, *Bjerke*, and *Mueller* does not cure the deficiency of the rejection in view of *Horad*. The *Robinson*, *Bjerke*, and *Mueller* references do not mention toilet fill valves, much less disclose or suggest "the bowl fill outlet port comprising an integrally molded portion of the body of the toilet fill valve." Thus, *Horad* in view of *Robinson*, *Bjerke*, and *Mueller* does not disclose or suggest "a bowl fill outlet port radially extending from a portion of a body of the toilet fill valve... the bowl fill outlet port comprising an integrally molded portion of the body of the toilet fill valve" a recited in claim 1.

Additionally, Applicants submit that *Horad* does not disclose or suggest "the bowl fill outlet port further comprising a first thread" as recited in claim 1. The Office Action alleges on page 3 that this feature is taught by the threaded ends 76 of the nipples 70 and 72 of *Horad*. Applicants respectfully disagree. *Horad* does not disclose or suggest that the nipples 70 and 72 are a "bowl fill outlet port comprising an integrally molded portion of the body of the toilet fill valve." Nor does *Horad* teach or suggest that a bowl fill outlet port includes nipples 70 and 72. As is well established in the law, the claims must be considered <u>as a whole</u>. *Hartness International, Inc. v. Simplimatic Engineering Co.*, 819 F.2d 1100, 2 USPQ2d 1826 (Fed. Cir. 1987) (In determining obviousness, "the inquiry is not whether each element existed in the prior art, but

whether the prior art made obvious the invention as a whole for which patentability is claimed"). Claim terms are not interpreted in a vacuum, devoid of the context of the claim as a whole. See *Hockerson-Halberstadt, Inc. v. Converse Inc.*, 183 F.3d 1369, 1374 (Fed. Cir. 1999) ("proper claim construction ... demands interpretation of the entire claim in context, not a single element in isolation."); *ACTV, Inc. v. Walt Disney Co.*, 346 F.3d 1082, 1088 (Fed. Cir. 2003) ("While certain terms may be at the center of the claim construction debate, the context of the surrounding words of the claim also must be considered...."). The addition of *Robinson*, *Bjerke*, and *Mueller* does not cure the deficiency of the rejection in view of *Horad*, nor does the Office Action rely on *Robinson*, *Bjerke*, or *Mueller* to disclose this feature. Thus, *Horad* in view of *Robinson*, *Bjerke*, and *Mueller* does not disclose or suggest "a bowl fill outlet port radially extending from a portion of a body of the toilet fill valve... the bowl fill outlet port comprising an integrally molded portion of the body of the toilet fill valve... the bowl fill outlet port further comprising a first thread" a recited in claim 1.

Further, Applicants submit that the cited references do not teach or suggest "the bowl fill valve inlet port is compatible with the bowl fill outlet port and the bowl fill valve inlet port being directly coupled to the bowl fill outlet port and establishing direct contact between the bowl fill outlet port and the bowl fill valve inlet port, wherein the bowl fill valve inlet port and the bowl fill valve outlet port each comprise an integrally molded portion of the bowl fill valve" as recited in claim 1. To begin, the Office Action does not even allege that the cited references disclose or suggest the features of "the bowl fill valve inlet port is compatible with the bowl fill outlet port and the bowl fill valve inlet port being <u>directly</u> coupled to the bowl fill outlet port <u>and establishing direct contact between the bowl fill outlet port and the bowl fill valve inlet port</u>" and "the first thread being engaged with the second thread and <u>affixing the bowl fill valve inlet port to the bowl fill outlet port</u>" (emphasis added). Nor does the Office Action indicate how the cited references, either individually or in combination, teach or suggest this feature. "35 U.S.C. 132 requires that the applicant be notified of the reasons for the rejection of the claim so that he or she can

decide how best to proceed." MPEP § 2141(II). As provided in 37 CFR 1.104(c)(2), "In rejecting claims for want of novelty or for obviousness... the particular part relied on must be designated as nearly as practicable." Thus, for at least the reason that the Office Action fails to articulate a finding that the cited reference includes each element claimed, Applicants submit that a *prima facie* case of obviousness has not been established using the art of record.

In addition, while *Horad* teaches a "secondary valve 20... with inlet passage 31a and outlet passage 31b which are axially aligned in the valve body 32" (col. 2, lines 38-42), *Horad* does not disclose or suggest that "the bowl fill valve inlet port is compatible with the bowl fill outlet port [comprising an integrally molded portion of the body of the toilet fill valve]" as recited in claim 1. Nor does *Horad* teach or suggest "the bowl fill valve inlet port being directly coupled to the bowl fill outlet port and establishing direct contact between the bowl fill outlet port and the bowl fill valve inlet port," much less a "first thread [of the bowl fill outlet port] being compatible with the second thread [of the bowl fill valve inlet port], and the first thread being engaged with the second thread and affixing the bowl fill valve inlet port to the bowl fill outlet port" as recited in claim 1. The addition of *Robinson*, *Bjerke*, and *Mueller* does not cure the deficiency of the rejection in view of *Horad*. While *Robinson*, *Bjerke*, and *Mueller* disclose a quick locking pipe joint, a quick connection system for a faucet, and diverter valve for a shower (respectively), the *Robinson*, *Bjerke*, and *Mueller* references do not mention toilet fill valves, much less teach or suggest directly coupling the bowl fill valve inlet port of a bowl fill valve to a bowl fill outlet port or a toilet fill valve or "affixing the bowl fill valve inlet port to the bowl fill outlet port." Thus, *Horad* in view of *Robinson*, *Bjerke*, and *Mueller* does not disclose or suggest "the bowl fill valve inlet port is compatible with the bowl fill outlet port and the bowl fill valve inlet port being directly coupled to the bowl fill outlet port and establishing direct contact between the bowl fill outlet port and the bowl fill valve inlet port, wherein the bowl fill valve inlet port and the bowl fill valve outlet port each comprise an integrally molded portion of the bowl fill valve... the bowl fill valve inlet port further comprising a second thread... compatible with the second thread, and the first thread

being compatible with the second thread, and the first thread being engaged with the second thread and affixing the bowl fill valve inlet port to the bowl fill outlet port" as recited in claim 1.

The Office Action alleges on page 3 that "it would be obvious... to modify the connection coupling type of Horad in view of the teaching of Robinson et al., Bjerke, or Mueller et al." However, as stated by the Supreme Court, "[R]ejections on obviousness cannot be sustained by mere conclusory statements; instead, there must be some articulated reasoning with some rational underpinning to support the legal conclusion of obviousness." *KSR Int'l Co. v. Teleflex Inc. (KSR)*, 550 U.S. 398, 418, 82 USPQ2d 1385, 1396 (quoting *In re Kahn,* 441 F.3d 977, 988, 78 USPQ2d 1329, 1336 (Fed. Cir. 2006)) (2007). Applicants submit that, other than a conclusion that it would be obvious to modify the connection of *Horad*, the Office Action provides no reasoning or rational underpinning to support such a conclusion. Nor has the Office Action provided any reasoning as to why one of skill in the art would have found the modification obvious in light of the teachings of the cited references. Accordingly, Applicants submit that a *prima facie* case of obviousness has not been established using the art of record.

Rather, it appears that the only suggestion or motivation comes from Applicants' own disclosure. Applicants respectfully submit that "it is impermissible to use the claimed invention as an instruction manual or 'template' to piece together the teaching of the prior art so that the claimed invention is rendered obvious. ... 'One cannot use hindsight reconstruction to pick and choose among isolated disclosures in the prior art to deprecate the claimed invention.'" *In re Fritch*, 972 FG.2d 1260, 1266, 23 USPQ2d 1780, 1784 (Fed. Cir. 1992). As is well established in the law, such hindsight to the Applicants' own disclosure is *per se* improper. *See Crown Operations International, Ltd. v. Solutia, Inc.*, 289 F.3d 1367, 62 USPQ2d 1917 (Fed. Cir. 2002) (a determination of obviousness cannot be based on a hindsight combination of components selectively culled from the prior art to fit the parameters of the invention); *In re McLaughlin*, 443 F.2d 1392, 1395 (CCPA 1971) ("[A]ny judgment on obviousness is in a sense necessarily a

reconstruction based on hindsight reasoning, but so long as it ... does not include knowledge gleaned only from applicant's disclosure, such a reconstruction is proper").

DeMarco* in view of *Robinson, Bjerke,* or *Mueller

The Office Action points to FIG. 1 of *DeMarco* in support the rejection of claim 1, alleging on page 4 that "a bowl fill valve" corresponds to flow control or reseal valve 36 (col. 3, lines 54-55) and "a bowl fill outlet port" corresponds to reseal hose 22 (col. 2, lines 22-23).

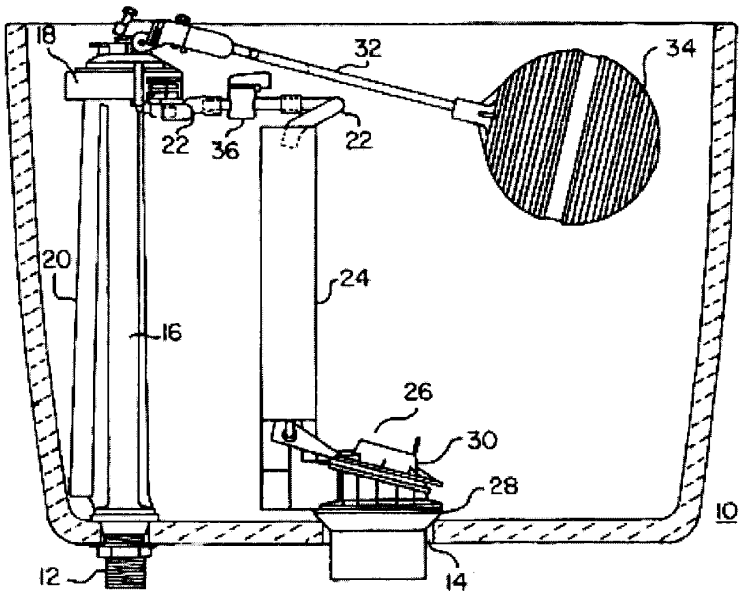

As such, the Office Action appears to allege that "toilet fill valve" corresponds to water control assembly 18 (col. 3, lines 16-17) and "water inlet" corresponds to inlet 12 (col. 3, lines 10-11). Applicants respectfully disagree.

Applicants submit that reseal hose 22 is not "a bowl fill outlet port radially extending from a portion of a body of the toilet fill valve" that comprises "an integrally molded portion of the body of the toilet fill valve" as recited in claim 1. Even assuming, for the sake of argument, that reseal hose 22 is connected to an outlet port of the water control assembly 18, *DeMarco* does not disclose or suggest "the bowl fill outlet port comprising an integrally molded portion of the body of the toilet fill valve" as recited in claim 1. Nor does the Office Action even allege that *DeMarco*

teaches or suggests the claimed feature. The addition of *Robinson*, *Bjerke*, and *Mueller* does not cure the deficiency of the rejection in view of *DeMarco*. The *Robinson*, *Bjerke*, and *Mueller* references do not mention toilet fill valves, much less disclose or suggest "the bowl fill outlet port comprising an integrally molded portion of the body of the toilet fill valve." Thus, *DeMarco* in view of *Robinson*, *Bjerke*, and *Mueller* does not disclose or suggest "a bowl fill outlet port radially extending from a portion of a body of the toilet fill valve... the bowl fill outlet port comprising an integrally molded portion of the body of the toilet fill valve" a recited in claim 1.

Additionally, Applicants submit that *DeMarco* does not disclose or suggest "the bowl fill outlet port further comprising a first thread" as recited in claim 1. *DeMarco* does not mention threads, much less disclose or suggest the bowl fill outlet port including a thread. Nor does the Office Action even allege that this feature is taught by *DeMarco*. The addition of *Robinson*, *Bjerke*, and *Mueller* does not cure the deficiency of the rejection in view of *DeMarco*, nor does the Office Action rely on *Robinson*, *Bjerke*, or *Mueller* to disclose this feature. Thus, *DeMarco* in view of *Robinson*, *Bjerke*, and *Mueller* does not disclose or suggest "a bowl fill outlet port radially extending from a portion of a body of the toilet fill valve... the bowl fill outlet port comprising an integrally molded portion of the body of the toilet fill valve... the bowl fill outlet port further comprising a first thread" a recited in claim 1.

Further, Applicants submit that the cited references do not teach or suggest "the bowl fill valve inlet port is compatible with the bowl fill outlet port and the bowl fill valve inlet port being directly coupled to the bowl fill outlet port and establishing direct contact between the bowl fill outlet port and the bowl fill valve inlet port, wherein the bowl fill valve inlet port and the bowl fill valve outlet port each comprise an integrally molded portion of the bowl fill valve" as recited in claim 1. To begin, the Office Action does not even allege that the cited references disclose or suggest the features of "the bowl fill valve inlet port is compatible with the bowl fill outlet port and the bowl fill valve inlet port being <u>directly</u> coupled to the bowl fill outlet port <u>and establishing direct contact between the bowl fill outlet port and the bowl fill valve inlet port</u>" and "the first

thread being engaged with the second thread and affixing the bowl fill valve inlet port to the bowl fill outlet port" (emphasis added). Nor does the Office Action indicate how the cited references, either individually or in combination, teach or suggest this feature. "35 U.S.C. 132 requires that the applicant be notified of the reasons for the rejection of the claim so that he or she can decide how best to proceed." MPEP § 2141(II). As provided in 37 CFR 1.104(c)(2), "In rejecting claims for want of novelty or for obviousness... the particular part relied on must be designated as nearly as practicable." Thus, for at least the reason that the Office Action fails to articulate a finding that the cited reference includes each element claimed, Applicants submit that a *prima facie* case of obviousness has not been established using the art of record.

In addition, while *DeMarco* teaches that "flow control valve 36 comprises... apertures 43 and 45. Extending from the left and right sides at apertures 43 and 45 of barrel section 42 are tubular stems 44 and 46" (col. 3, lines 59-67), *DeMarco* does not disclose or suggest that "the bowl fill valve inlet port is compatible with the bowl fill outlet port [comprising an integrally molded portion of the body of the toilet fill valve]" as recited in claim 1. Nor does *DeMarco* teach or suggest "the bowl fill valve inlet port being directly coupled to the bowl fill outlet port and establishing direct contact between the bowl fill outlet port and the bowl fill valve inlet port," much less a "first thread [of the bowl fill outlet port] being compatible with the second thread [of the bowl fill valve inlet port], and the first thread being engaged with the second thread and affixing the bowl fill valve inlet port to the bowl fill outlet port" as recited in claim 1. The addition of *Robinson*, *Bjerke*, and *Mueller* does not cure the deficiency of the rejection in view of *DeMarco*. While *Robinson*, *Bjerke*, and *Mueller* disclose a quick locking pipe joint, a quick connection system for a faucet, and diverter valve for a shower (respectively), the *Robinson*, *Bjerke*, and *Mueller* references do not mention toilet fill valves, much less teach or suggest directly coupling the bowl fill valve inlet port of a bowl fill valve to a bowl fill outlet port or a toilet fill valve or "affixing the bowl fill valve inlet port to the bowl fill outlet port." Thus, *DeMarco* in view of *Robinson*, *Bjerke*, and *Mueller* does not disclose or suggest "the bowl fill valve inlet port is compatible with the bowl fill

outlet port and the bowl fill valve inlet port being directly coupled to the bowl fill outlet port and establishing direct contact between the bowl fill outlet port and the bowl fill valve inlet port, wherein the bowl fill valve inlet port and the bowl fill valve outlet port each comprise an integrally molded portion of the bowl fill valve... the bowl fill valve inlet port further comprising a second thread... compatible with the second thread, and the first thread being compatible with the second thread, and the first thread being engaged with the second thread and affixing the bowl fill valve inlet port to the bowl fill outlet port" as recited in claim 1.

The Office Action alleges on page 5 that "it would be obvious... to modify the connection coupling type of DeMarco in view of the teaching of Robinson et al., Bjerke, or Mueller et al." However, as stated by the Supreme Court, "[R]ejections on obviousness cannot be sustained by mere conclusory statements; instead, there must be some articulated reasoning with some rational underpinning to support the legal conclusion of obviousness." *KSR Int'l Co. v. Teleflex Inc. (KSR)*, 550 U.S. 398, 418, 82 USPQ2d 1385, 1396 (quoting *In re Kahn,* 441 F.3d 977, 988, 78 USPQ2d 1329, 1336 (Fed. Cir. 2006)) (2007). Applicants submit that, other than a conclusion that it would be obvious to modify the connection of *DeMarco*, the Office Action provides no reasoning or rational underpinning to support such a conclusion. Nor has the Office Action provided any reasoning as to why one of skill in the art would have found the modification obvious in light of the teachings of the cited references. Accordingly, Applicants submit that a *prima facie* case of obviousness has not been established using the art of record.

Rather, it appears that the only suggestion or motivation comes from Applicants' own disclosure. Applicants respectfully submit that "it is impermissible to use the claimed invention as an instruction manual or 'template' to piece together the teaching of the prior art so that the claimed invention is rendered obvious. ... 'One cannot use hindsight reconstruction to pick and choose among isolated disclosures in the prior art to deprecate the claimed invention.'" *In re Fritch*, 972 FG.2d 1260, 1266, 23 USPQ2d 1780, 1784 (Fed. Cir. 1992). As is well established in the law, such hindsight to the Applicants' own disclosure is *per se* improper. *See Crown*

Operations International, Ltd. v. Solutia, Inc., 289 F.3d 1367, 62 USPQ2d 1917 (Fed. Cir. 2002) (a determination of obviousness cannot be based on a hindsight combination of components selectively culled from the prior art to fit the parameters of the invention); *In re McLaughlin*, 443 F.2d 1392, 1395 (CCPA 1971) ("[A]ny judgment on obviousness is in a sense necessarily a reconstruction based on hindsight reasoning, but so long as it ... does not include knowledge gleaned only from applicant's disclosure, such a reconstruction is proper").

Summary

For at least the reasons described above, *Horad* or *DeMarco* in view of either one of *Robinson*, *Bjerke*, or *Mueller* fail to disclose, teach or suggest all of the features recited in amended claim 1. Therefore, Applicants respectfully request that the rejections of claim 1 be withdrawn.

B. Dependent Claims 2-7

Because independent claim 1 is allowable over *Horad* in view of *Robinson*, *Bjerke*, or *Mueller* and *DeMarco* in view of *Robinson*, *Bjerke*, or *Mueller*, Applicants respectfully submit that claims 2-7 are allowable for at least the reason that each depends from claim 1. *In re Fine*, 837 F.2d 1071, 5 U.S.P.Q. 2d 1596, 1598 (Fed. Cir. 1988). Therefore, Applicants respectfully request that the rejection of claims 2-7 be withdrawn.

C. Independent Claim 18

Applicants' claim 18 provides as follows (emphasis added):

> A toilet with a toilet tank having an adjustable bowl fill water flow, comprising:
> a toilet fill valve in the toilet tank, the toilet valve having a water inlet coupled to a water source outside of the toilet tank and a water outlet directing a flow of water into the toilet tank;
> ***a bowl fill outlet port radially extending from a portion of a body of the toilet fill valve***, the bowl fill outlet port being operatively coupled to the water inlet and ***the bowl fill outlet port comprising an integrally molded portion of the body of the toilet fill valve***;
> a bowl fill valve having a bowl fill valve inlet port and a bowl fill valve outlet port, wherein ***the bowl fill valve inlet port is compatible with the bowl fill outlet port and the bowl fill valve inlet port being directly***

> ***coupled to the bowl fill outlet port and establishing direct contact between the bowl fill outlet port and the bowl fill valve inlet port***, wherein the bowl fill valve inlet port and the bowl fill valve outlet port each comprise an integrally molded portion of the bowl fill valve;
>
> a tube having a first end attached to the bowl fill valve outlet port and a second end directed into an overflow tube in the toilet tank, wherein a flow of water into the overflow tube is directed to a toilet bowl of the toilet;
>
> the bowl fill valve being configured to supply an adjustable flow of water out the bowl fill valve outlet port through the tube and into the overflow tube for filling the toilet bowl during a flush cycle of a toilet;
>
> ***the bowl fill outlet port further comprising a first thread***;
>
> the bowl fill valve inlet port further comprising a second thread, ***the first thread being compatible with the second thread, and the first thread being engaged with the second thread and affixing the bowl fill valve inlet port to the bowl fill outlet port***; and
>
> a sealing ring clamped between a portion of the bowl fill outlet port and a portion of the bowl fill valve inlet port to form a seal between the bowl fill outlet port and the bowl fill valve inlet port

Applicants respectfully request that the rejections of independent claim 18 be withdrawn for at least the reason that *Horad* or *DeMarco* in view of either one of *Robinson*, *Bjerke*, or *Mueller* fails to disclose, teach, or suggest at least the features recited and emphasized above in claim 18.

Horad* in view of *Robinson, Bjerke*, or *Mueller

The Office Action points to FIG. 1 of *Horad* in support the rejection of claim 18, alleging on page 2 that "a bowl fill valve" corresponds to bracket 40 (col. 2, lines 46-47) and "a bowl fill outlet port" corresponds to tube 18 (col. 2, line 9). As such, the Office Action appears to allege that "toilet fill valve" corresponds to main valve 14 (col. 2, lines 7-8), "water inlet" corresponds to the connection to water inlet line 12 (col. 2, line 7), and "bowl fill valve" corresponds to secondary valve 20 (col. 2, lines 9-10). Applicants respectfully disagree.

Applicants submit that tube 18 is not "a bowl fill outlet port radially extending from a portion of a body of the toilet fill valve" that comprises "an integrally molded portion of the body of the toilet fill valve" as recited in claim 18. Even assuming, for the sake of argument, that tube 18 is connected to an outlet port of the main valve 14, *Horad* does not disclose or suggest "the bowl fill outlet port comprising an integrally molded portion of the body of the toilet fill valve" as recited in claim 18. Nor does the Office Action even allege that *Horad* teaches or suggests the

claimed feature. The addition of *Robinson*, *Bjerke*, and *Mueller* does not cure the deficiency of the rejection in view of *Horad*. The *Robinson*, *Bjerke*, and *Mueller* references do not mention toilet fill valves, much less disclose or suggest "the bowl fill outlet port comprising an integrally molded portion of the body of the toilet fill valve." Thus, *Horad* in view of *Robinson*, *Bjerke*, and *Mueller* does not disclose or suggest "a bowl fill outlet port radially extending from a portion of a body of the toilet fill valve... the bowl fill outlet port comprising an integrally molded portion of the body of the toilet fill valve" a recited in claim 18.

Additionally, Applicants submit that *Horad* does not disclose or suggest "the bowl fill outlet port further comprising a first thread" as recited in claim 18. The Office Action alleges on page 3 that this feature is taught by the threaded ends 76 of the nipples 70 and 72 of *Horad*. Applicants respectfully disagree. *Horad* does not disclose or suggest that the nipples 70 and 72 are a "bowl fill outlet port comprising an integrally molded portion of the body of the toilet fill valve." Nor does *Horad* teach or suggest that a bowl fill outlet port includes nipples 70 and 72. As is well established in the law, the claims must be considered <u>as a whole</u>. *Hartness International, Inc. v. Simplimatic Engineering Co.*, 819 F.2d 1100, 2 USPQ2d 1826 (Fed. Cir. 1987) (In determining obviousness, "the inquiry is not whether each element existed in the prior art, but whether the prior art made obvious the invention as a whole for which patentability is claimed"). Claim terms are not interpreted in a vacuum, devoid of the context of the claim as a whole. See *Hockerson-Halberstadt, Inc. v. Converse Inc.*, 183 F.3d 1369, 1374 (Fed. Cir. 1999) ("proper claim construction ... demands interpretation of the entire claim in context, not a single element in isolation."); *ACTV, Inc. v. Walt Disney Co.*, 346 F.3d 1082, 1088 (Fed. Cir. 2003) ("While certain terms may be at the center of the claim construction debate, the context of the surrounding words of the claim also must be considered...."). The addition of *Robinson*, *Bjerke*, and *Mueller* does not cure the deficiency of the rejection in view of *Horad*, nor does the Office Action rely on *Robinson*, *Bjerke*, or *Mueller* to disclose this feature. Thus, *Horad* in view of *Robinson*, *Bjerke*, and *Mueller* does not disclose or suggest "a bowl fill outlet port radially

extending from a portion of a body of the toilet fill valve... the bowl fill outlet port comprising an integrally molded portion of the body of the toilet fill valve... the bowl fill outlet port further comprising a first thread" a recited in claim 18.

Further, Applicants submit that the cited references do not teach or suggest "the bowl fill valve inlet port is compatible with the bowl fill outlet port and the bowl fill valve inlet port being directly coupled to the bowl fill outlet port and establishing direct contact between the bowl fill outlet port and the bowl fill valve inlet port, wherein the bowl fill valve inlet port and the bowl fill valve outlet port each comprise an integrally molded portion of the bowl fill valve" as recited in claim 18. To begin, the Office Action does not even allege that the cited references disclose or suggest the features of "the bowl fill valve inlet port is compatible with the bowl fill outlet port and the bowl fill valve inlet port being directly coupled to the bowl fill outlet port and establishing direct contact between the bowl fill outlet port and the bowl fill valve inlet port" and "the first thread being engaged with the second thread and affixing the bowl fill valve inlet port to the bowl fill outlet port" (emphasis added). Nor does the Office Action indicate how the cited references, either individually or in combination, teach or suggest this feature. "35 U.S.C. 132 requires that the applicant be notified of the reasons for the rejection of the claim so that he or she can decide how best to proceed." MPEP § 2141(II). As provided in 37 CFR 1.104(c)(2), "In rejecting claims for want of novelty or for obviousness... the particular part relied on must be designated as nearly as practicable." Thus, for at least the reason that the Office Action fails to articulate a finding that the cited reference includes each element claimed, Applicants submit that a *prima facie* case of obviousness has not been established using the art of record.

In addition, while *Horad* teaches a "secondary valve 20... with inlet passage 31a and outlet passage 31b which are axially aligned in the valve body 32" (col. 2, lines 38-42), *Horad* does not disclose or suggest that "the bowl fill valve inlet port is compatible with the bowl fill outlet port [comprising an integrally molded portion of the body of the toilet fill valve]" as recited in claim 18. Nor does *Horad* teach or suggest "the bowl fill valve inlet port being directly coupled

to the bowl fill outlet port and establishing direct contact between the bowl fill outlet port and the bowl fill valve inlet port," much less a "first thread [of the bowl fill outlet port] being compatible with the second thread [of the bowl fill valve inlet port], and the first thread being engaged with the second thread and affixing the bowl fill valve inlet port to the bowl fill outlet port" as recited in claim 18. The addition of *Robinson*, *Bjerke*, and *Mueller* does not cure the deficiency of the rejection in view of *Horad*. While *Robinson*, *Bjerke*, and *Mueller* disclose a quick locking pipe joint, a quick connection system for a faucet, and diverter valve for a shower (respectively), the *Robinson*, *Bjerke*, and *Mueller* references do not mention toilet fill valves, much less teach or suggest directly coupling the bowl fill valve inlet port of a bowl fill valve to a bowl fill outlet port or a toilet fill valve or "affixing the bowl fill valve inlet port to the bowl fill outlet port." Thus, *Horad* in view of *Robinson*, *Bjerke*, and *Mueller* does not disclose or suggest "the bowl fill valve inlet port is compatible with the bowl fill outlet port and the bowl fill valve inlet port being directly coupled to the bowl fill outlet port and establishing direct contact between the bowl fill outlet port and the bowl fill valve inlet port, wherein the bowl fill valve inlet port and the bowl fill valve outlet port each comprise an integrally molded portion of the bowl fill valve... the bowl fill valve inlet port further comprising a second thread... compatible with the second thread, and the first thread being compatible with the second thread, and the first thread being engaged with the second thread and affixing the bowl fill valve inlet port to the bowl fill outlet port" as recited in claim 18.

The Office Action alleges on page 3 that "it would be obvious... to modify the connection coupling type of Horad in view of the teaching of Robinson et al., Bjerke, or Mueller et al." However, as stated by the Supreme Court, "[R]ejections on obviousness cannot be sustained by mere conclusory statements; instead, there must be some articulated reasoning with some rational underpinning to support the legal conclusion of obviousness." *KSR Int'l Co. v. Teleflex Inc. (KSR)*, 550 U.S. 398, 418, 82 USPQ2d 1385, 1396 (quoting *In re Kahn,* 441 F.3d 977, 988, 78 USPQ2d 1329, 1336 (Fed. Cir. 2006)) (2007). Applicants submit that, other than a conclusion that it would be obvious to modify the connection of *Horad*, the Office Action

provides no reasoning or rational underpinning to support such a conclusion. Nor has the Office Action provided any reasoning as to why one of skill in the art would have found the modification obvious in light of the teachings of the cited references. Accordingly, Applicants submit that a *prima facie* case of obviousness has not been established using the art of record.

Rather, it appears that the only suggestion or motivation comes from Applicants' own disclosure. Applicants respectfully submit that "it is impermissible to use the claimed invention as an instruction manual or 'template' to piece together the teaching of the prior art so that the claimed invention is rendered obvious. ... 'One cannot use hindsight reconstruction to pick and choose among isolated disclosures in the prior art to deprecate the claimed invention.'" *In re Fritch*, 972 FG.2d 1260, 1266, 23 USPQ2d 1780, 1784 (Fed. Cir. 1992). As is well established in the law, such hindsight to the Applicants' own disclosure is *per se* improper. *See Crown Operations International, Ltd. v. Solutia, Inc.*, 289 F.3d 1367, 62 USPQ2d 1917 (Fed. Cir. 2002) (a determination of obviousness cannot be based on a hindsight combination of components selectively culled from the prior art to fit the parameters of the invention); *In re McLaughlin*, 443 F.2d 1392, 1395 (CCPA 1971) ("[A]ny judgment on obviousness is in a sense necessarily a reconstruction based on hindsight reasoning, but so long as it ... does not include knowledge gleaned only from applicant's disclosure, such a reconstruction is proper").

DeMarco* in view of *Robinson, Bjerke*, or *Mueller

The Office Action points to FIG. 1 of *DeMarco* in support the rejection of claim 18, alleging on page 4 that "a bowl fill valve" corresponds to flow control or reseal valve 36 (col. 3, lines 54-55) and "a bowl fill outlet port" corresponds to reseal hose 22 (col. 2, lines 22-23). As such, the Office Action appears to allege that "toilet fill valve" corresponds to water control assembly 18 (col. 3, lines 16-17) and "water inlet" corresponds to inlet 12 (col. 3, lines 10-11). Applicants respectfully disagree.

Applicants submit that reseal hose 22 is not "a bowl fill outlet port radially extending from a portion of a body of the toilet fill valve" that comprises "an integrally molded portion of the body

of the toilet fill valve" as recited in claim 18. Even assuming, for the sake of argument, that reseal hose 22 is connected to an outlet port of the water control assembly 18, *DeMarco* does not disclose or suggest "the bowl fill outlet port comprising an integrally molded portion of the body of the toilet fill valve" as recited in claim 18. Nor does the Office Action even allege that *DeMarco* teaches or suggests the claimed feature. The addition of *Robinson*, *Bjerke*, and *Mueller* does not cure the deficiency of the rejection in view of *DeMarco*. The *Robinson*, *Bjerke*, and *Mueller* references do not mention toilet fill valves, much less disclose or suggest "the bowl fill outlet port comprising an integrally molded portion of the body of the toilet fill valve." Thus, *DeMarco* in view of *Robinson*, *Bjerke*, and *Mueller* does not disclose or suggest "a bowl fill outlet port radially extending from a portion of a body of the toilet fill valve... the bowl fill outlet port comprising an integrally molded portion of the body of the toilet fill valve" a recited in claim 18.

Additionally, Applicants submit that *DeMarco* does not disclose or suggest "the bowl fill outlet port further comprising a first thread" as recited in claim 18. *DeMarco* does not mention threads, much less disclose or suggest the bowl fill outlet port including a thread. Nor does the Office Action even allege that this feature is taught by *DeMarco*. The addition of *Robinson*, *Bjerke*, and *Mueller* does not cure the deficiency of the rejection in view of *DeMarco*, nor does the Office Action rely on *Robinson*, *Bjerke*, or *Mueller* to disclose this feature. Thus, *DeMarco* in view of *Robinson*, *Bjerke*, and *Mueller* does not disclose or suggest "a bowl fill outlet port radially extending from a portion of a body of the toilet fill valve... the bowl fill outlet port comprising an integrally molded portion of the body of the toilet fill valve... the bowl fill outlet port further comprising a first thread" a recited in claim 18.

Further, Applicants submit that the cited references do not teach or suggest "the bowl fill valve inlet port is compatible with the bowl fill outlet port and the bowl fill valve inlet port being directly coupled to the bowl fill outlet port and establishing direct contact between the bowl fill outlet port and the bowl fill valve inlet port, wherein the bowl fill valve inlet port and the bowl fill valve outlet port each comprise an integrally molded portion of the bowl fill valve" as recited in

claim 18. To begin, the Office Action does not even allege that the cited references disclose or suggest the features of "the bowl fill valve inlet port is compatible with the bowl fill outlet port and the bowl fill valve inlet port being directly coupled to the bowl fill outlet port and establishing direct contact between the bowl fill outlet port and the bowl fill valve inlet port" and "the first thread being engaged with the second thread and affixing the bowl fill valve inlet port to the bowl fill outlet port" (emphasis added). Nor does the Office Action indicate how the cited references, either individually or in combination, teach or suggest this feature. "35 U.S.C. 132 requires that the applicant be notified of the reasons for the rejection of the claim so that he or she can decide how best to proceed." MPEP § 2141(II). As provided in 37 CFR 1.104(c)(2), "In rejecting claims for want of novelty or for obviousness... the particular part relied on must be designated as nearly as practicable." Thus, for at least the reason that the Office Action fails to articulate a finding that the cited reference includes each element claimed, Applicants submit that a *prima facie* case of obviousness has not been established using the art of record.

In addition, while *DeMarco* teaches that "flow control valve 36 comprises... apertures 43 and 45. Extending from the left and right sides at apertures 43 and 45 of barrel section 42 are tubular stems 44 and 46" (col. 3, lines 59-67), *DeMarco* does not disclose or suggest that "the bowl fill valve inlet port is compatible with the bowl fill outlet port [comprising an integrally molded portion of the body of the toilet fill valve]" as recited in claim 18. Nor does *DeMarco* teach or suggest "the bowl fill valve inlet port being directly coupled to the bowl fill outlet port and establishing direct contact between the bowl fill outlet port and the bowl fill valve inlet port," much less a "first thread [of the bowl fill outlet port] being compatible with the second thread [of the bowl fill valve inlet port], and the first thread being engaged with the second thread and affixing the bowl fill valve inlet port to the bowl fill outlet port" as recited in claim 18. The addition of *Robinson*, *Bjerke*, and *Mueller* does not cure the deficiency of the rejection in view of *DeMarco*. While *Robinson*, *Bjerke*, and *Mueller* disclose a quick locking pipe joint, a quick connection system for a faucet, and diverter valve for a shower (respectively), the *Robinson*, *Bjerke*, and *Mueller*

references do not mention toilet fill valves, much less teach or suggest directly coupling the bowl fill valve inlet port of a bowl fill valve to a bowl fill outlet port or a toilet fill valve or "affixing the bowl fill valve inlet port to the bowl fill outlet port." Thus, *DeMarco* in view of *Robinson*, *Bjerke*, and *Mueller* does not disclose or suggest "the bowl fill valve inlet port is compatible with the bowl fill outlet port and the bowl fill valve inlet port being directly coupled to the bowl fill outlet port and establishing direct contact between the bowl fill outlet port and the bowl fill valve inlet port, wherein the bowl fill valve inlet port and the bowl fill valve outlet port each comprise an integrally molded portion of the bowl fill valve... the bowl fill valve inlet port further comprising a second thread... compatible with the second thread, and the first thread being compatible with the second thread, and the first thread being engaged with the second thread and affixing the bowl fill valve inlet port to the bowl fill outlet port" as recited in claim 18.

The Office Action alleges on page 5 that "it would be obvious... to modify the connection coupling type of DeMarco in view of the teaching of Robinson et al., Bjerke, or Mueller et al." However, as stated by the Supreme Court, "[R]ejections on obviousness cannot be sustained by mere conclusory statements; instead, there must be some articulated reasoning with some rational underpinning to support the legal conclusion of obviousness." *KSR Int'l Co. v. Teleflex Inc. (KSR)*, 550 U.S. 398, 418, 82 USPQ2d 1385, 1396 (quoting *In re Kahn,* 441 F.3d 977, 988, 78 USPQ2d 1329, 1336 (Fed. Cir. 2006)) (2007). Applicants submit that, other than a conclusion that it would be obvious to modify the connection of *DeMarco*, the Office Action provides no reasoning or rational underpinning to support such a conclusion. Nor has the Office Action provided any reasoning as to why one of skill in the art would have found the modification obvious in light of the teachings of the cited references. Accordingly, Applicants submit that a *prima facie* case of obviousness has not been established using the art of record.

Rather, it appears that the only suggestion or motivation comes from Applicants' own disclosure. Applicants respectfully submit that "it is impermissible to use the claimed invention as an instruction manual or 'template' to piece together the teaching of the prior art so that the

claimed invention is rendered obvious. ... 'One cannot use hindsight reconstruction to pick and choose among isolated disclosures in the prior art to deprecate the claimed invention.'" *In re Fritch*, 972 FG.2d 1260, 1266, 23 USPQ2d 1780, 1784 (Fed. Cir. 1992). As is well established in the law, such hindsight to the Applicants' own disclosure is *per se* improper. *See Crown Operations International, Ltd. v. Solutia, Inc.*, 289 F.3d 1367, 62 USPQ2d 1917 (Fed. Cir. 2002) (a determination of obviousness cannot be based on a hindsight combination of components selectively culled from the prior art to fit the parameters of the invention); *In re McLaughlin*, 443 F.2d 1392, 1395 (CCPA 1971) ("[A]ny judgment on obviousness is in a sense necessarily a reconstruction based on hindsight reasoning, but so long as it ... does not include knowledge gleaned only from applicant's disclosure, such a reconstruction is proper").

Summary

For at least the reasons described above, *Horad* or *DeMarco* in view of either one of *Robinson*, *Bjerke*, or *Mueller* fail to disclose, teach or suggest all of the features recited in amended claim 18. Therefore, Applicants respectfully request that the rejections of claim 18 be withdrawn.

D. Independent Claim 19

Applicants' claim 19, as amended, provides as follows (emphasis added):

> A method for providing an adjustable bowl fill water flow in a toilet fill valve, comprising the steps of:
> operatively coupling a bowl fill outlet port to a water inlet of the toilet fill valve;
> radially extending the bowl fill outlet port from a portion of a body of the toilet fill valve; and
> ***coupling a bowl fill valve inlet port of a bowl fill valve directly to the bowl fill outlet port by mating a first thread associated with the bowl fill outlet port with a second thread associated with the bowl fill valve inlet port, wherein the bowl fill valve inlet port is affixed to the bowl fill outlet port via the first and second threads, the bowl fill valve inlet port being compatible with the bowl fill outlet port***, and the bowl fill valve being configured to provide for the adjustable bowl fill water flow out a bowl fill valve outlet port of the bowl fill valve for filling a toilet bowl during a flush cycle of a toilet; and

> clamping a sealing ring between a portion of the bowl fill valve inlet port and a portion of the bowl fill outlet port.

Applicants respectfully request that the rejections of independent claim 19 be withdrawn for at least the reason that *Horad* or *DeMarco* in view of either one of *Robinson*, *Bjerke*, or *Mueller* fail to disclose, teach, or suggest at least the features recited and emphasized above in claim 19.

Horad* in view of *Robinson, Bjerke*, or *Mueller

Applicants submit that the *Horad* in view of *Robinson*, *Bjerke*, or *Mueller* does not teach or suggest "coupling a bowl fill valve inlet port of a bowl fill valve directly to the bowl fill outlet port by mating a first thread associated with the bowl fill outlet port with a second thread associated with the bowl fill valve inlet port, wherein the bowl fill valve inlet port is affixed to the bowl fill outlet port via the first and second threads, the bowl fill valve inlet port being compatible with the bowl fill outlet port" as recited in amended claim 19. To begin, the Office Action does not even allege that the cited references disclose or suggest the features of the bowl fill valve inlet port directly coupling to the bowl fill outlet port by mating a first thread associated with the bowl fill outlet port with a second thread associated with the bowl fill valve inlet port" or the bowl fill valve inlet port is affixed to the bowl fill outlet port via the first and second threads" (emphasis added). Nor does the Office Action indicate how the cited references, either individually or in combination, teach or suggest this feature. "35 U.S.C. 132 requires that the applicant be notified of the reasons for the rejection of the claim so that he or she can decide how best to proceed." MPEP § 2141(II). As provided in 37 CFR 1.104(c)(2), "In rejecting claims for want of novelty or for obviousness... the particular part relied on must be designated as nearly as practicable." Thus, for at least the reason that the Office Action fails to articulate a finding that the cited reference includes each element claimed, Applicants submit that a *prima facie* case of obviousness has not been established using the art of record.

In addition, while *Horad* teaches a "secondary valve 20... with inlet passage 31a and outlet passage 31b which are axially aligned in the valve body 32" (col. 2, lines 38-42), *Horad*

does not disclose or suggest that "the bowl fill valve inlet port is affixed to the bowl fill outlet port via the first and second threads" as recited in amended claim 19. Nor does *Horad* teach or suggest "coupling a bowl fill valve inlet port of a bowl fill valve directly to the bowl fill outlet port by mating a first thread associated with the bowl fill outlet port with a second thread associated with the bowl fill valve inlet port," much less a "the bowl fill valve inlet port is affixed to the bowl fill outlet port via the first and second threads" as recited in amended claim 19. The addition of *Robinson*, *Bjerke*, and *Mueller* does not cure the deficiency of the rejection in view of *Horad*. While *Robinson*, *Bjerke*, and *Mueller* disclose a quick locking pipe joint, a quick connection system for a faucet, and diverter valve for a shower (respectively), the *Robinson*, *Bjerke*, and *Mueller* references do not mention toilet fill valves, much less teach or suggest directly coupling the bowl fill valve inlet port of a bowl fill valve to a bowl fill outlet port or a toilet fill valve. Thus, *Horad* in view of *Robinson*, *Bjerke*, and *Mueller* does not disclose or suggest "coupling a bowl fill valve inlet port of a bowl fill valve directly to the bowl fill outlet port by mating a first thread associated with the bowl fill outlet port with a second thread associated with the bowl fill valve inlet port, wherein the bowl fill valve inlet port is affixed to the bowl fill outlet port via the first and second threads, the bowl fill valve inlet port being compatible with the bowl fill outlet port" as recited in amended claim 19.

The Office Action alleges on pages 3-4 that "the method as claimed would be inherent during normal assembly of the... Horad in view of either one of Robinson et al., Bjerke, or Mueller et al. device." Applicants respectfully disagree. For at least the reasons above, *Horad* in view of *Robinson*, *Bjerke*, and *Mueller* does not disclose or suggest "coupling a bowl fill valve inlet port of a bowl fill valve directly to the bowl fill outlet port by mating a first thread associated with the bowl fill outlet port with a second thread associated with the bowl fill valve inlet port, wherein the bowl fill valve inlet port is affixed to the bowl fill outlet port via the first and second threads." Instead, *Horad* teaches that "the main valve 14 is connected by first a tube 18 to a secondary valve 20" (col. 2, lines 9-10). Nor has the Office Action provided any reasoning or extrinsic

evidence as to why the claimed features are necessarily present in light of the teachings of the cited references. As stated in MPEP § 2112, "'In relying upon the theory of inherency, the examiner must provide a basis in fact and/or technical reasoning to reasonably support the determination that the allegedly inherent characteristic necessarily flows from the teachings of the applied prior art.' *Ex parte Levy,* 17 USPQ2d 1461, 1464 (Bd. Pat. App. & Inter. 1990) (emphasis in original)". "To establish inherency, the extrinsic evidence 'must make clear that the missing descriptive matter is necessarily present in the thing described in the reference, and that it would be so recognized by persons of ordinary skill. Inherency, however, may not be established by probabilities or possibilities. The mere fact that a certain thing may result from a given set of circumstances is not sufficient.' " *In re Robertson*, 169 F.3d 743, 745, 49 USPQ2d 1949, 1950-51 (Fed. Cir. 1999) (citations omitted). Accordingly, Applicants submit that a *prima facie* case of obviousness has not been established using the art of record.

DeMarco* in view of *Robinson, Bjerke*, or *Mueller

Applicants submit that *DeMarco* in view of *Robinson*, *Bjerke*, or *Mueller* does not teach or suggest "coupling a bowl fill valve inlet port of a bowl fill valve directly to the bowl fill outlet port by mating a first thread associated with the bowl fill outlet port with a second thread associated with the bowl fill valve inlet port, wherein the bowl fill valve inlet port is affixed to the bowl fill outlet port via the first and second threads, the bowl fill valve inlet port being compatible with the bowl fill outlet port" as recited in amended claim 19. To begin, the Office Action does not even allege that the cited references disclose or suggest the features of the bowl fill valve inlet port directly coupling to the bowl fill outlet port by mating a first thread associated with the bowl fill outlet port with a second thread associated with the bowl fill valve inlet port" or the bowl fill valve inlet port is affixed to the bowl fill outlet port via the first and second threads" (emphasis added). Nor does the Office Action indicate how the cited references, either individually or in combination, teach or suggest this feature. "35 U.S.C. 132 requires that the applicant be notified of the reasons for the rejection of the claim so that he or she can decide how best to proceed." MPEP

§ 2141(II). As provided in 37 CFR 1.104(c)(2), "In rejecting claims for want of novelty or for obviousness... the particular part relied on must be designated as nearly as practicable." Thus, for at least the reason that the Office Action fails to articulate a finding that the cited reference includes each element claimed, Applicants submit that a *prima facie* case of obviousness has not been established using the art of record.

In addition, while *DeMarco* teaches that "flow control valve 36 comprises... apertures 43 and 45. Extending from the left and right sides at apertures 43 and 45 of barrel section 42 are tubular stems 44 and 46" (col. 3, lines 59-67), *DeMarco* does not disclose or suggest that "the bowl fill valve inlet port is affixed to the bowl fill outlet port via the first and second threads" as recited in amended claim 19. Nor does *Horad* teach or suggest "coupling a bowl fill valve inlet port of a bowl fill valve directly to the bowl fill outlet port by mating a first thread associated with the bowl fill outlet port with a second thread associated with the bowl fill valve inlet port," much less a "the bowl fill valve inlet port is affixed to the bowl fill outlet port via the first and second threads" as recited in amended claim 19. The addition of *Robinson*, *Bjerke*, and *Mueller* does not cure the deficiency of the rejection in view of *DeMarco*. While *Robinson*, *Bjerke*, and *Mueller* disclose a quick locking pipe joint, a quick connection system for a faucet, and diverter valve for a shower (respectively), the *Robinson*, *Bjerke*, and *Mueller* references do not mention toilet fill valves, much less teach or suggest directly coupling the bowl fill valve inlet port of a bowl fill valve to a bowl fill outlet port or a toilet fill valve. Thus, *DeMarco* in view of *Robinson*, *Bjerke*, and *Mueller* does not disclose or suggest "coupling a bowl fill valve inlet port of a bowl fill valve directly to the bowl fill outlet port by mating a first thread associated with the bowl fill outlet port with a second thread associated with the bowl fill valve inlet port, wherein the bowl fill valve inlet port is affixed to the bowl fill outlet port via the first and second threads, the bowl fill valve inlet port being compatible with the bowl fill outlet port" as recited in amended claim 19.

The Office Action alleges on page 5 that "the method as claimed would be inherent during normal assembly of the DeMarco... in view of either one of Robinson et al., Bjerke, or Mueller et al.

device." Applicants respectfully disagree. For at least the reasons above, *DeMarco* in view of *Robinson*, *Bjerke*, and *Mueller* does not disclose or suggest "coupling a bowl fill valve inlet port of a bowl fill valve directly to the bowl fill outlet port by mating a first thread associated with the bowl fill outlet port with a second thread associated with the bowl fill valve inlet port, wherein the bowl fill valve inlet port is affixed to the bowl fill outlet port via the first and second threads." Instead, *Horad* teaches that "the main valve 14 is connected by first a tube 18 to a secondary valve 20" (col. 2, lines 9-10). Nor has the Office Action provided any reasoning or extrinsic evidence as to why the claimed features are necessarily present in light of the teachings of the cited references. As stated in MPEP § 2112, "'In relying upon the theory of inherency, the examiner must provide a basis in fact and/or technical reasoning to reasonably support the determination that the allegedly inherent characteristic <u>necessarily</u> flows from the teachings of the applied prior art.' *Ex parte Levy,* 17 USPQ2d 1461, 1464 (Bd. Pat. App. & Inter. 1990) (emphasis in original)". "To establish inherency, the extrinsic evidence 'must make clear that the missing descriptive matter is necessarily present in the thing described in the reference, and that it would be so recognized by persons of ordinary skill. Inherency, however, may not be established by probabilities or possibilities. The mere fact that a certain thing may result from a given set of circumstances is not sufficient.' " *In re Robertson*, 169 F.3d 743, 745, 49 USPQ2d 1949, 1950-51 (Fed. Cir. 1999) (citations omitted). Accordingly, Applicants submit that a *prima facie* case of obviousness has not been established using the art of record.

<u>Summary</u>

For at least the reasons described above, *Horad* or *DeMarco* in view of either one of *Robinson*, *Bjerke*, or *Mueller* fail to disclose, teach or suggest all of the features recited in amended claim 19. Therefore, Applicants respectfully request that the rejections of claim 19 be withdrawn.

II. Newly Added Claims

New claim 26 is based on subject matter that is explicit and/or inherent within the description of the specification and/or the drawings. Applicants submit that no new matter has been added in the new claim 26 and that new claim 26 is allowable over the cited references. Furthermore, Applicants respectfully submit that claim 26, which depends either directly or indirectly from independent claim 19, is allowable for at least the reason that it depends from an allowable independent claim. *In re Fine*, 837 F.2d 1071, 5 U.S.P.Q.2d 1596 (Fed. Cir. 1988). Therefore, Applicants request the Examiner to enter and allow the above new claims.

III. Amendment to Specification

The specification has been amended to include a reference character present in FIG. 7. Applicants respectfully assert that no new matter has been added by the amendment, and request the Examiner to enter the above amendment.

CONCLUSION

Applicants respectfully request that all outstanding objections and rejections be withdrawn and that this application and presently pending claims 1-7, 18-19, and 26 be allowed to issue. Any statements in the Office Action that are not explicitly addressed herein are not intended to be admitted. In addition, any and all findings of inherency are traversed as not having been shown to be necessarily present. Furthermore, any and all findings of well-known art and official notice, or statements interpreted similarly, should not be considered well known since the Office Action does not include specific factual findings predicated on sound technical and scientific reasoning to support such conclusions. If the Examiner has any questions or comments regarding Applicants' response, the Examiner is encouraged to telephone Applicants' undersigned counsel.

Respectfully submitted,

By: _____
Randy R. Schoen, Reg. No. 62,440

THOMAS, KAYDEN, HORSTEMEYER & RISLEY, L.L.P.
600 Galleria Parkway, SE
Suite 1500
Atlanta, Georgia 30339-5948
Tel: (770) 933-9500
Fax: (770) 951-0933

Fluidmaster, Inc. - EX1010, Page 097
IPR2024-00633 (Fluidmaster Inc v. Danco Inc)

Electronic Acknowledgement Receipt

EFS ID:	9526215
Application Number:	12786904
International Application Number:	
Confirmation Number:	3473
Title of Invention:	Toilet Fill Valve with Adjustable Bowl Fill Flow
First Named Inventor/Applicant Name:	Michael J. Schuster
Customer Number:	24504
Filer:	Randy Richard Schoen/Julie Campbell
Filer Authorized By:	Randy Richard Schoen
Attorney Docket Number:	171901-1032
Receipt Date:	24-FEB-2011
Filing Date:	25-MAY-2010
Time Stamp:	15:57:23
Application Type:	Utility under 35 USC 111(a)

Payment information:

Submitted with Payment	no

File Listing:

Document Number	Document Description	File Name	File Size(Bytes)/ Message Digest	Multi Part /.zip	Pages (if appl.)
1	Amendment/Req. Reconsideration-After Non-Final Reject	01313317.PDF	1631404 f31a47bec7626ebd2ee9d0f741cd84dd1b69aa97	no	35

Warnings:

Information:

Total Files Size (in bytes):	1631404

This Acknowledgement Receipt evidences receipt on the noted date by the USPTO of the indicated documents, characterized by the applicant, and including page counts, where applicable. It serves as evidence of receipt similar to a Post Card, as described in MPEP 503.

New Applications Under 35 U.S.C. 111
If a new application is being filed and the application includes the necessary components for a filing date (see 37 CFR 1.53(b)-(d) and MPEP 506), a Filing Receipt (37 CFR 1.54) will be issued in due course and the date shown on this Acknowledgement Receipt will establish the filing date of the application.

National Stage of an International Application under 35 U.S.C. 371
If a timely submission to enter the national stage of an international application is compliant with the conditions of 35 U.S.C. 371 and other applicable requirements a Form PCT/DO/EO/903 indicating acceptance of the application as a national stage submission under 35 U.S.C. 371 will be issued in addition to the Filing Receipt, in due course.

New International Application Filed with the USPTO as a Receiving Office
If a new international application is being filed and the international application includes the necessary components for an international filing date (see PCT Article 11 and MPEP 1810), a Notification of the International Application Number and of the International Filing Date (Form PCT/RO/105) will be issued in due course, subject to prescriptions concerning national security, and the date shown on this Acknowledgement Receipt will establish the international filing date of the application.

PTO/SB/06 (07-06)
Approved for use through 1/31/2007. OMB 0651-0032
U.S. Patent and Trademark Office; U.S. DEPARTMENT OF COMMERCE
Under the Paperwork Reduction Act of 1995, no persons are required to respond to a collection of information unless it displays a valid OMB control number.

PATENT APPLICATION FEE DETERMINATION RECORD

Substitute for Form PTO-875

Application or Docket Number	Filing Date	
12/786,904	05/25/2010	☐ To be Mailed

APPLICATION AS FILED – PART I

FOR	(Column 1) NUMBER FILED	(Column 2) NUMBER EXTRA	SMALL ENTITY ☒ RATE ($)	SMALL ENTITY FEE ($)	OR	OTHER THAN SMALL ENTITY RATE ($)	OTHER THAN SMALL ENTITY FEE ($)
☐ BASIC FEE (37 CFR 1.16(a), (b), or (c))	N/A	N/A	N/A			N/A	
☐ SEARCH FEE (37 CFR 1.16(k), (i), or (m))	N/A	N/A	N/A			N/A	
☐ EXAMINATION FEE (37 CFR 1.16(o), (p), or (q))	N/A	N/A	N/A			N/A	
TOTAL CLAIMS (37 CFR 1.16(i))	minus 20 =	*	X $ =		OR	X $ =	
INDEPENDENT CLAIMS (37 CFR 1.16(h))	minus 3 =	*	X $ =			X $ =	
☐ APPLICATION SIZE FEE (37 CFR 1.16(s))	If the specification and drawings exceed 100 sheets of paper, the application size fee due is $250 ($125 for small entity) for each additional 50 sheets or fraction thereof. See 35 U.S.C. 41(a)(1)(G) and 37 CFR 1.16(s).						
☐ MULTIPLE DEPENDENT CLAIM PRESENT (37 CFR 1.16(j))							
* If the difference in column 1 is less than zero, enter "0" in column 2.			TOTAL			TOTAL	

APPLICATION AS AMENDED – PART II

AMENDMENT 02/24/2011

	(Column 1) CLAIMS REMAINING AFTER AMENDMENT		(Column 2) HIGHEST NUMBER PREVIOUSLY PAID FOR	(Column 3) PRESENT EXTRA	SMALL ENTITY RATE ($)	SMALL ENTITY ADDITIONAL FEE ($)	OR	OTHER THAN SMALL ENTITY RATE ($)	OTHER THAN SMALL ENTITY ADDITIONAL FEE ($)
Total (37 CFR 1.16(i))	* 10	Minus	** 20	= 0	X $26 =	0	OR	X $ =	
Independent (37 CFR 1.16(h))	* 3	Minus	***3	= 0	X $110 =	0	OR	X $ =	
☐ Application Size Fee (37 CFR 1.16(s))									
☐ FIRST PRESENTATION OF MULTIPLE DEPENDENT CLAIM (37 CFR 1.16(j))							OR		
					TOTAL ADD'L FEE	0	OR	TOTAL ADD'L FEE	

AMENDMENT

	(Column 1) CLAIMS REMAINING AFTER AMENDMENT		(Column 2) HIGHEST NUMBER PREVIOUSLY PAID FOR	(Column 3) PRESENT EXTRA	RATE ($)	ADDITIONAL FEE ($)	OR	RATE ($)	ADDITIONAL FEE ($)
Total (37 CFR 1.16(i))	*	Minus	**	=	X $ =		OR	X $ =	
Independent (37 CFR 1.16(h))	*	Minus	***	=	X $ =		OR	X $ =	
☐ Application Size Fee (37 CFR 1.16(s))									
☐ FIRST PRESENTATION OF MULTIPLE DEPENDENT CLAIM (37 CFR 1.16(j))							OR		
					TOTAL ADD'L FEE		OR	TOTAL ADD'L FEE	

* If the entry in column 1 is less than the entry in column 2, write "0" in column 3.
** If the "Highest Number Previously Paid For" IN THIS SPACE is less than 20, enter "20".
*** If the "Highest Number Previously Paid For" IN THIS SPACE is less than 3, enter "3".
The "Highest Number Previously Paid For" (Total or Independent) is the highest number found in the appropriate box in column 1.

Legal Instrument Examiner:
/STEFANIE BRYCE/

This collection of information is required by 37 CFR 1.16. The information is required to obtain or retain a benefit by the public which is to file (and by the USPTO to process) an application. Confidentiality is governed by 35 U.S.C. 122 and 37 CFR 1.14. This collection is estimated to take 12 minutes to complete, including gathering, preparing, and submitting the completed application form to the USPTO. Time will vary depending upon the individual case. Any comments on the amount of time you require to complete this form and/or suggestions for reducing this burden, should be sent to the Chief Information Officer, U.S. Patent and Trademark Office, U.S. Department of Commerce, P.O. Box 1450, Alexandria, VA 22313-1450. DO NOT SEND FEES OR COMPLETED FORMS TO THIS ADDRESS. **SEND TO: Commissioner for Patents, P.O. Box 1450, Alexandria, VA 22313-1450.**
If you need assistance in completing the form, call 1-800-PTO-9199 and select option 2.

UNITED STATES PATENT AND TRADEMARK OFFICE

UNITED STATES DEPARTMENT OF COMMERCE
United States Patent and Trademark Office
Address: COMMISSIONER FOR PATENTS
P.O. Box 1450
Alexandria, Virginia 22313-1450
www.uspto.gov

APPLICATION NO.	FILING DATE	FIRST NAMED INVENTOR	ATTORNEY DOCKET NO.	CONFIRMATION NO.
12/786,904	05/25/2010	Michael J. Schuster	171901-1032	3473

24504 7590 11/24/2010
THOMAS, KAYDEN, HORSTEMEYER & RISLEY, LLP
600 GALLERIA PARKWAY, S.E.
STE 1500
ATLANTA, GA 30339-5994

EXAMINER
NGUYEN, TUAN N

ART UNIT	PAPER NUMBER
3751	

MAIL DATE	DELIVERY MODE
11/24/2010	PAPER

Please find below and/or attached an Office communication concerning this application or proceeding.

The time period for reply, if any, is set in the attached communication.

PTOL-90A (Rev. 04/07)

Office Action Summary	Application No.	Applicant(s)	
	12/786,904	SCHUSTER ET AL.	
	Examiner	Art Unit	
	Tuan N. Nguyen	3751	

-- The MAILING DATE of this communication appears on the cover sheet with the correspondence address --

Period for Reply

A SHORTENED STATUTORY PERIOD FOR REPLY IS SET TO EXPIRE 3 MONTH(S) OR THIRTY (30) DAYS, WHICHEVER IS LONGER, FROM THE MAILING DATE OF THIS COMMUNICATION.

- Extensions of time may be available under the provisions of 37 CFR 1.136(a). In no event, however, may a reply be timely filed after SIX (6) MONTHS from the mailing date of this communication.
- If NO period for reply is specified above, the maximum statutory period will apply and will expire SIX (6) MONTHS from the mailing date of this communication.
- Failure to reply within the set or extended period for reply will, by statute, cause the application to become ABANDONED (35 U.S.C. § 133). Any reply received by the Office later than three months after the mailing date of this communication, even if timely filed, may reduce any earned patent term adjustment. See 37 CFR 1.704(b).

Status

1)☒ Responsive to communication(s) filed on *23 August 2010*.

2a)☐ This action is **FINAL**. 2b)☒ This action is non-final.

3)☐ Since this application is in condition for allowance except for formal matters, prosecution as to the merits is closed in accordance with the practice under *Ex parte Quayle*, 1935 C.D. 11, 453 O.G. 213.

Disposition of Claims

4)☒ Claim(s) *1-7,18 and 19* is/are pending in the application.

4a) Of the above claim(s) _____ is/are withdrawn from consideration.

5)☐ Claim(s) _____ is/are allowed.

6)☒ Claim(s) *1-7, 18 and19* is/are rejected.

7)☐ Claim(s) _____ is/are objected to.

8)☐ Claim(s) _____ are subject to restriction and/or election requirement.

Application Papers

9)☐ The specification is objected to by the Examiner.

10)☐ The drawing(s) filed on _____ is/are: a)☐ accepted or b)☐ objected to by the Examiner.

Applicant may not request that any objection to the drawing(s) be held in abeyance. See 37 CFR 1.85(a).

Replacement drawing sheet(s) including the correction is required if the drawing(s) is objected to. See 37 CFR 1.121(d).

11)☐ The oath or declaration is objected to by the Examiner. Note the attached Office Action or form PTO-152.

Priority under 35 U.S.C. § 119

12)☐ Acknowledgment is made of a claim for foreign priority under 35 U.S.C. § 119(a)-(d) or (f).

a)☐ All b)☐ Some * c)☐ None of:

1.☐ Certified copies of the priority documents have been received.

2.☐ Certified copies of the priority documents have been received in Application No. _____.

3.☐ Copies of the certified copies of the priority documents have been received in this National Stage application from the International Bureau (PCT Rule 17.2(a)).

* See the attached detailed Office action for a list of the certified copies not received.

Attachment(s)

1) ☐ Notice of References Cited (PTO-892)

2) ☐ Notice of Draftsperson's Patent Drawing Review (PTO-948)

3) ☒ Information Disclosure Statement(s) (PTO/SB/08) Paper No(s)/Mail Date *5/25/10*.

4) ☐ Interview Summary (PTO-413) Paper No(s)/Mail Date. _____ .

5) ☐ Notice of Informal Patent Application

6) ☐ Other: _____.

Fluidmaster, Inc. - EX1010, Page 102
IPR2024-00633 (Fluidmaster Inc v. Danco Inc)

DETAILED ACTION

Claim Rejections - 35 USC § 103

1. The following is a quotation of 35 U.S.C. 103(a) which forms the basis for all obviousness rejections set forth in this Office action:

> (a) A patent may not be obtained though the invention is not identically disclosed or described as set forth in section 102 of this title, if the differences between the subject matter sought to be patented and the prior art are such that the subject matter as a whole would have been obvious at the time the invention was made to a person having ordinary skill in the art to which said subject matter pertains. Patentability shall not be negatived by the manner in which the invention was made.

2. Claims 1-7, 18 and19 are rejected under 35 U.S.C. 103(a) as being unpatentable over either one of Horad in view of either one of Robinson et al., Bjerke, or Mueller et al.

Horad discloses a toilet fill valve (Fig. 1) comprising a water inlet; a first water outlet configured to supply water to a toilet tank; a bowl fill outlet port-radially extending from a portion of a body of the toilet fill valve, the bowl fill outlet port being operatively coupled to the water inlet; a bowl fill valve (40) having a bowl fill valve inlet port and a bowl fill valve outlet port, wherein the bowl fill valve inlet port is compatible with the bowl fill outlet port and the bowl fill valve inlet port being coupled to the bowl fill outlet port; a tube (22) having a first end attached to the bowl fill valve outlet port and a second end directed into an overflow tube in the toilet tank, wherein a flow of water into the overflow tube is directed to a toilet bowl of the toilet; and the bowl fill valve being configured to supply an adjustable flow of water out the bowl fill outlet port for filling a toilet bowl during a flush cycle of a toilet. The bowl fill valve extends beyond the bowl fill outlet port in a radial direction with respect to a portion of the body of the toilet fill valve. The bowl fill outlet port (18) further comprises a female receptacle; and the bowl fill valve inlet port further comprises a male end compatible with the female receptacle. The bowl fill valve

inlet port further comprises a female receptacle (about 31); and the bowl fill outlet port further comprises a male end (about 76) compatible with the female receptacle. The toilet fill valve further comprises a float (17); an actuating arm coupled to the float, the actuating arm radially extending in an orthogonal direction relative to a longitudinal axis of the toilet fill valve; and the bowl fill valve extending in an orthogonal direction relative to the longitudinal axis of the toilet fill valve, wherein the actuating arm is angularly offset relative to the bowl fill valve, thereby preventing an interference with the bowl fill valve and a translational stern extending from the float to a free end of the actuating arm. The bowl fill valve outlet port further comprises a nipple (see Fig. 2) adapted to mate with an end of a tube (22). The bowl fill valve further comprises a number of biased positions that is rotatable to select different flow rate output. The toilet fill valve further comprises a first thread on a side wall of the bowl fill outlet port (about 76); and a second thread on a side, wall of the bowl fill valve inlet port, wherein the bowl fill valve inlet port is coupled to the bowl fill outlet port via the first and second threads. The Horad reference teaches all of the limitations as discussed above except of having a specific type of connection coupling as claimed. The patent to either one of Robinson et al., Bjerke, or Mueller et al. teaches the above exceptions. In view of the teaching of Robinson et al., Bjerke, or Mueller et al., it would be obvious to one of ordinary skill in the art, at the time the invention was made to modify the connection coupling type of Hoard in view of the teaching of Robinson et al., Bjerke, or Mueller et al. Such teachings provide no unobvious or unexpected result. Therefore, the method as claimed would be

inherent during normal assembly of the DeMarco or Horad in view of either one of Robinson et al., Bjerke, or Mueller et al. device.

3. Claims 1-7, 18 and19 are rejected under 35 U.S.C. 103(a) as being unpatentable over either one of DeMarco in view of either one of Robinson et al., Bjerke, or Mueller et al.

DeMarco discloses a toilet fill valve (Fig. 1) comprising a water inlet; a first water outlet configured to supply water to a toilet tank; a bowl fill outlet port-radially extending from a portion of a body of the toilet fill valve, the bowl fill outlet port being operatively coupled to the water inlet; a bowl fill valve (36) having a bowl fill valve inlet port and a bowl fill valve outlet port, wherein the bowl fill valve inlet port is compatible with the bowl fill outlet port and the bowl fill valve inlet port being coupled to the bowl fill outlet port; a tube (tube 22 on the right) having a first end attached to the bowl fill valve outlet port and a second end directed into an overflow tube in the toilet tank, wherein a flow of water into the overflow tube is directed to a toilet bowl of the toilet; and the bowl fill valve being configured to supply an adjustable flow of water out the bowl fill outlet port for filling a toilet bowl during a flush cycle of a toilet. The bowl fill valve extends beyond the bowl fill outlet port in a radial direction with respect to a portion of the body of the toilet fill valve. The bowl fill outlet port further comprises a female receptacle (the right side of the left member 22 of Fig. 1); and the bowl fill valve inlet port (about 44) further comprises a male end compatible with the female receptacle. The bowl fill valve inlet port further comprises a female receptacle (the left side of the left member 22 of Fig. 1); and the bowl fill outlet port further comprises a male end (see Fig. 1) compatible with

the female receptacle. The toilet fill valve further comprises a float (34); an actuating arm (32) coupled to the float, the actuating arm radially extending in an orthogonal direction relative to a longitudinal axis of the toilet fill valve; and the bowl fill valve extending in an orthogonal direction relative to the longitudinal axis of the toilet fill valve, wherein the actuating arm is angularly offset relative to the bowl fill valve, thereby preventing an interference with the bowl fill valve and a translational stern extending from the float to a free end of the actuating arm. The bowl fill valve outlet port further comprises a nipple (about 46) adapted to mate with an end of a tube (22). The bowl fill valve further comprises a number of biased positions that is rotatable to select different flow rate output. The DeMarco reference teaches all of the limitations as discussed above except of having a specific type of connection coupling as claimed. The patent to either one of Robinson et al., Bjerke, or Mueller et al. teaches the above exceptions. In view of the teaching of Robinson et al., Bjerke, or Mueller et al., it would be obvious to one of ordinary skill in the art, at the time the invention was made to modify the connection coupling type of DeMarco in view of the teaching of Robinson et al., Bjerke, or Mueller et al. Such teachings provide no unobvious or unexpected result. Therefore, the method as claimed would be inherent during normal assembly of the DeMarco or Horad in view of either one of Robinson et al., Bjerke, or Mueller et al. device.

Conclusion

4. Any inquiry concerning this communication or earlier communications from the examiner should be directed to Tuan N. Nguyen whose telephone number is 571-272-4892. The examiner can normally be reached on Monday-Friday (10:00-6:00).

If attempts to reach the examiner by telephone are unsuccessful, the examiner's supervisor, Gregory Huson can be reached on (571) 272-4887. The fax phone number for the organization where this application or proceeding is assigned is 571-273-8300.

Information regarding the status of an application may be obtained from the Patent Application Information Retrieval (PAIR) system. Status information for published applications may be obtained from either Private PAIR or Public PAIR. Status information for unpublished applications is available through Private PAIR only. For more information about the PAIR system, see http://pair-direct.uspto.gov. Should you have questions on access to the Private PAIR system, contact the Electronic Business Center (EBC) at 866-217-9197 (toll-free). If you would like assistance from a USPTO Customer Service Representative or access to the automated information system, call 800-786-9199 (IN USA OR CANADA) or 571-272-1000.

/Tuan N Nguyen/
Primary Examiner, Art Unit 3751

TN

PTO/SB/08a (01-10)
Approved for use through 07/31/2012. OMB 0651-0031
U.S. Patent and Trademark Office; U.S. DEPARTMENT OF COMMERCE
Under the Paperwork Reduction Act of 1995, no persons are required to respond to a collection of information unless it contains a valid OMB control number.

INFORMATION DISCLOSURE STATEMENT BY APPLICANT (**Not for submission under 37 CFR 1.99)**		
	Application Number	
	Filing Date	2010-05-25
	First Named Inventor	Michael J. Schuster et al.
	Art Unit	tba
	Examiner Name	tba
	Attorney Docket Number	171901-1031

U.S.PATENTS Remove

Examiner Initial*	Cite No	Patent Number	Kind Code[1]	Issue Date	Name of Patentee or Applicant of cited Document	Pages,Columns,Lines where Relevant Passages or Relevant Figures Appear
	1	1787601		1931-01-06	Swanberg	
	2	2087503		1937-07-20	Clemmons	
	3	2512176		1950-06-20	Shaffer	
	4	2791235		1957-05-07	Smith	
	5	3040769		1962-06-26	Lamb	
	6	3086546		1963-04-23	Brown	
	7	3172128		1965-03-09	Ducey	
	8	3457947		1969-07-29	Fitzgerald	

ALL REFERENCES CONSIDERED EXCEPT WHERE LINED THROUGH. /T.N./

Receipt date: 05/25/2010	Application Number	12786904 - GAU: 3751
INFORMATION DISCLOSURE STATEMENT BY APPLICANT (**Not for submission under 37 CFR 1.99)**	Filing Date	2010-05-25
	First Named Inventor	Michael J. Schuster et al.
	Art Unit	tba
	Examiner Name	tba
	Attorney Docket Number	171901-1031

	9	3744064		1973-07-10	Preston	
	10	4351071		1982-09-28	Clar	
	11	4700413		1987-10-20	Lopez	
	12	4770388		1988-09-13	Carman	
	13	5083323		1992-01-28	Cannan	
	14	5228152		1993-07-20	Fraley	
	15	5232011		1993-08-03	Royalty	
	16	5327931		1994-07-12	Royalty	
	17	5442820		1995-08-22	Becker	
	18	5542448		1996-08-06	Campbell et al.	
	19	5742951		1998-04-28	Wright et al.	

ALL REFERENCES CONSIDERED EXCEPT WHERE LINED THROUGH. /T.N./

Receipt date: 05/25/2010	Application Number	12786904 - GAU: 3751
INFORMATION DISCLOSURE STATEMENT BY APPLICANT (**Not for submission under 37 CFR 1.99)**	Filing Date	2010-05-25
	First Named Inventor	Michael J. Schuster et al.
	Art Unit	tba
	Examiner Name	tba
	Attorney Docket Number	171901-1031

	20	5775366		1998-07-07	Ray	
	21	6219856	B1	2001-04-24	Alles	
	22	6385788	B1	2002-05-14	Wasielewski	
	23	0136128		1873-02-25	Bralley	
	24	0994746		1911-06-13	Dwyer et al.	
	25	0996743		1911-07-04	Yancey	
	26	1113057		1914-10-06	Schumann	
	27	2465866		1949-03-29	Gaines	
	28	2736037		1956-02-28	Hardie	
	29	2799865		1957-07-23	Schuster	
	30	3321972		1967-05-30	Goldtrap	

EFS Web 2.1.17 ALL REFERENCES CONSIDERED EXCEPT WHERE LINED THROUGH. /T.N./

Receipt date: 05/25/2010	Application Number	12786904 - GAU: 3751
INFORMATION DISCLOSURE STATEMENT BY APPLICANT (**Not for submission under 37 CFR 1.99)**	Filing Date	2010-05-25
	First Named Inventor	Michael J. Schuster et al.
	Art Unit	tba
	Examiner Name	tba
	Attorney Docket Number	171901-1031

	31	3762395		1973-10-02	Taylor	
	32	4134164		1979-01-16	Sanmartin Rial	
	33	4505231		1985-03-19	Syler	
	34	4527295		1985-07-09	Lacore	
	35	4898124		1990-02-06	Granberg et al.	
	36	5794279		1998-08-18	Schwartz	
	37	5862537		1999-01-26	Osmond	
	38	6295660		2001-10-02	Schuster	
	39	3986216		1976-10-19	Davis et al.	
	40	3994628		1976-11-30	Kemper	
	41	4007498		1977-02-15	Pearson	

ALL REFERENCES CONSIDERED EXCEPT WHERE LINED THROUGH. /T.N./

Receipt date: 05/25/2010	Application Number	12786904 - GAU: 3751
INFORMATION DISCLOSURE STATEMENT BY APPLICANT (**Not for submission under 37 CFR 1.99)**	Filing Date	2010-05-25
	First Named Inventor	Michael J. Schuster et al.
	Art Unit	tba
	Examiner Name	tba
	Attorney Docket Number	171901-1031

	42	4017916		1977-04-19	Pearson	
	43	4032822		1977-06-28	Un	
	44	4090532		1978-05-23	Story, Jr.	
	45	4145775		1979-03-27	Butler	
	46	4392260		1983-07-12	Bensen	
	47	4707867		1987-11-24	Kawabe et al.	
	48	4764996		1988-08-23	Pino	
	49	4793588		1988-12-27	Laverty, Jr.	
	50	4918764		1990-04-24	Haselswerdt et al.	
	51	4980932		1991-01-01	Stemples	
	52	5007452		1991-04-16	Antunez	

EFS Web 2.1.17 ALL REFERENCES CONSIDERED EXCEPT WHERE LINED THROUGH. /T.N./

Receipt date: 05/25/2010	Application Number	12786904 - GAU: 3751
INFORMATION DISCLOSURE STATEMENT BY APPLICANT (**Not for submission under 37 CFR 1.99)**	Filing Date	2010-05-25
	First Named Inventor	Michael J. Schuster et al.
	Art Unit	tba
	Examiner Name	tba
	Attorney Docket Number	171901-1031

	53	5036553		1991-08-06	Sanderson	
	54	5052060		1991-10-01	Makita et al.	
	55	5134729		1992-08-04	Shaw	
	56	5245710		1993-09-21	Haselswerdt et al.	
	57	5362026		1994-11-08	Kobayashi et al.	
	58	5432959		1995-07-18	Ellsworth et al.	
	59	5469586		1995-11-28	Tsutsui et al.	
	60	5708991		1998-01-20	DeMarco	
	61	5715860		1998-02-10	Horad	
	62	6202227	B1	2001-03-20	Gurowitz	
	63	6209576	B1	2001-04-03	Davis	

EFS Web 2.1.17 ALL REFERENCES CONSIDERED EXCEPT WHERE LINED THROUGH. /T.N./

Receipt date: 05/25/2010	Application Number	12786904 - GAU: 3751
INFORMATION DISCLOSURE STATEMENT BY APPLICANT (**Not for submission under 37 CFR 1.99)**	Filing Date	2010-05-25
	First Named Inventor	Michael J. Schuster et al.
	Art Unit	tba
	Examiner Name	tba
	Attorney Docket Number	171901-1031

	64	6263519	B1	2001-07-24	Parsons et al.	
	65	6560790	B2	2003-05-13	Saar et al.	
	66	4420845		1983-12-20	Antunez	
	67	6823889		2004-11-30	Schuster	
	68	6409221	B1	2002-06-25	Robinson et al.	
	69	5926868	A	1999-07-27	Bjerke, Thomas E.	
	70	5624073		1997-04-29	Mueller et al.	

If you wish to add additional U.S. Patent citation information please click the Add button. Add

U.S.PATENT APPLICATION PUBLICATIONS Remove

Examiner Initial*	Cite No	Publication Number	Kind Code[1]	Publication Date	Name of Patentee or Applicant of cited Document	Pages,Columns,Lines where Relevant Passages or Relevant Figures Appear
	1	20020092090	A1	2002-07-18	Johnson	
	2	20020162166	A1	2002-11-07	Saar et al.	

If you wish to add additional U.S. Published Application citation information please click the Add button. Add

EFS Web 2.1.17 ALL REFERENCES CONSIDERED EXCEPT WHERE LINED THROUGH. /T.N./

Receipt date: 05/25/2010	Application Number	12786904 - GAU: 3751
INFORMATION DISCLOSURE STATEMENT BY APPLICANT (**Not for submission under 37 CFR 1.99)**	Filing Date	2010-05-25
	First Named Inventor	Michael J. Schuster et al.
	Art Unit	tba
	Examiner Name	tba
	Attorney Docket Number	171901-1031

FOREIGN PATENT DOCUMENTS Remove

Examiner Initial*	Cite No	Foreign Document Number[3]	Country Code[2] ¡	Kind Code[4]	Publication Date	Name of Patentee or Applicant of cited Document	Pages,Columns,Lines where Relevant Passages or Relevant Figures Appear	T[5]
	1							☐

If you wish to add additional Foreign Patent Document citation information please click the Add button Add

NON-PATENT LITERATURE DOCUMENTS Remove

Examiner Initials*	Cite No	Include name of the author (in CAPITAL LETTERS), title of the article (when appropriate), title of the item (book, magazine, journal, serial, symposium, catalog, etc), date, pages(s), volume-issue number(s), publisher, city and/or country where published.	T[5]
	1	US Patent 6,823,889, File History, 2004-2005 (Grandparent Patent to this Application).	☐
	2	US Patent Application 10/958,797, File History, 2004-2010 (Parent Patent to this Application)	☐

If you wish to add additional non-patent literature document citation information please click the Add button Add

EXAMINER SIGNATURE

Examiner Signature	/Tuan Nguyen/	Date Considered	11/08/2010

*EXAMINER: Initial if reference considered, whether or not citation is in conformance with MPEP 609. Draw line through a citation if not in conformance and not considered. Include copy of this form with next communication to applicant.

[1] See Kind Codes of USPTO Patent Documents at www.USPTO.GOV or MPEP 901.04. [2] Enter office that issued the document, by the two-letter code (WIPO Standard ST.3). [3] For Japanese patent documents, the indication of the year of the reign of the Emperor must precede the serial number of the patent document. [4] Kind of document by the appropriate symbols as indicated on the document under WIPO Standard ST.16 if possible. [5] Applicant is to place a check mark here if English language translation is attached.

EFS Web 2.1.17 ALL REFERENCES CONSIDERED EXCEPT WHERE LINED THROUGH. /T.N./

Search Notes	Application/Control No.	Applicant(s)/Patent under Reexamination	
	12/786,904	SCHUSTER ET AL.	
	Examiner	Art Unit	
	Tuan N. Nguyen	3751	

SEARCHED			
Class	Subclass	Date	Examiner
4	331 324 366 415 675	11/22/2010	TN
285	91		
137	15.26		
	432 434		
	436 437		
	441-444	11/22/2010	TN

INTERFERENCE SEARCHED			
Class	Subclass	Date	Examiner

SEARCH NOTES (INCLUDING SEARCH STRATEGY)		
	DATE	EXMR
REVIEW PARENT CASES	11/22/2010	TN

PATENT

IN THE UNITED STATES PATENT AND TRADEMARK OFFICE

In Re Application of:

Michael J. Schuster, et al.

Serial No.: 12/786,904

Filed: May 25, 2010

For: **Toilet Fill Valve with Adjustable Bowl Fill Flow**

Confirmation No.: 3473

Group Art Unit: 3751

Examiner: tba

Docket No. 171901-1032

RESPONSE TO NOTICE OF NON-COMPLIANT AMENDMENT AND PRELIMINARY AMENDMENT

Commissioner for Patents
P.O. Box 1450
Alexandria, Virginia 22313-1450

Sir:

The Notice of Non-Compliant Amendment dated August 11, 2010 has been received and carefully reviewed. In response, the Applicants resubmit the Preliminary Amendment that herein includes the proper status identifier for Claim 19. Applicants request the following amendments and accompanying remarks be entered and considered prior to examination.

It is not believed that extensions of time or fees for net addition of claims are required, beyond those that may otherwise be provided for in documents accompanying this paper. However, in the event that additional extensions of time are necessary to allow consideration of this paper, such extensions are hereby petitioned under 37 C.F.R. § 1.136(a), and any fees required therefor (including fees for net addition of claims) are hereby authorized to be charged to Deposit Account No. 20-0778.

IN THE SPECIFICATION:

Amend the specification as follows:

Please delete paragraph [0001] and insert the following substitute paragraph in the same location:

CROSS REFERENCE TO RELATED APPLICATIONS

[0001] The present patent application is a Continuation Application of, and claims priority to, U.S. Patent Application entitled "Toilet Fill Valve with Adjustable Bowl Fill Flow" filed on October 5, 2004 and assigned Serial Number 10/958,797, which is a Continuation-in-Part Application of, and claims priority to, U.S. Patent 6,823,889 entitled "Toilet Fill Valve with Adjustable Bowl Fill Flow" filed on March 11, 2004.

IN THE CLAIMS:

Amend the claims as follows:

1. (Currently Amended) A toilet fill valve, comprising:

a water inlet;

a first water outlet configured to supply water to a toilet tank;

a bowl fill outlet port radially extending from a portion of a body of the toilet fill valve, the bowl fill outlet port being operatively coupled to the water inlet, and the bowl fill outlet port comprising an integrally molded portion of the body of the toilet fill valve;

a bowl fill valve having a bowl fill valve inlet port and a bowl fill valve outlet port, wherein the bowl fill valve inlet port is compatible with the bowl fill outlet port and the bowl fill valve inlet port being directly coupled to the bowl fill outlet port and establishing direct contact between the bowl fill outlet port and the bowl fill valve inlet port, wherein the bowl fill valve inlet port and the bowl fill valve outlet port each comprise an integrally molded portion of the bowl fill valve; ~~and~~

the bowl fill valve being configured to supply an adjustable flow of water out the bowl fill outlet port for filling a toilet bowl during a flush cycle of a toilet;

the bowl fill outlet port further comprising a first thread;

the bowl fill valve inlet port further comprising a second thread, the first thread being compatible with the second thread, and the first thread being engaged with the second thread and affixing the bowl fill valve inlet port to the bowl fill outlet port; and

a sealing ring clamped between a portion of the bowl fill outlet port and a portion of the bowl fill valve inlet port to form a seal between the bowl fill outlet port and the bowl fill valve inlet port.

2. (Original) The toilet fill valve of claim 1, wherein bowl fill valve extends beyond the bowl fill outlet port in a radial direction with respect to a portion of the body of the toilet fill valve.

3. (Currently Amended) The toilet fill valve of claim 1, wherein:

the bowl fill outlet port further comprises a female receptacle; and

the bowl fill valve inlet port further comprises a male end ~~compatible with the female receptacle~~.

4. (Currently Amended) The toilet fill valve of claim 1, wherein:

the bowl fill valve inlet port further comprises a female receptacle; and

the bowl fill outlet port further comprises a male end ~~compatible with the female receptacle~~.

5. (Original) The toilet fill valve of claim 1, further comprising:

a float;

an actuating arm coupled to the float, the actuating arm radially extending in an orthogonal direction relative to a longitudinal axis of the toilet fill valve; and

the bowl fill valve extending in an orthogonal direction relative to the longitudinal axis of the toilet fill valve, wherein the actuating arm is angularly offset relative to the bowl fill valve, thereby preventing an interference with the bowl fill valve and a translational stem extending from the float to a free end of the actuating arm.

6. (Original) The toilet fill valve of claim 1, wherein the bowl fill valve outlet port further comprises a nipple adapted to mate with an end of a tube.

7. (Original) The toilet fill valve of claim 1, wherein the bowl fill valve further comprises a number of biased positions.

8-17. (Canceled)

18. (Currently Amended) A toilet with a toilet tank having an adjustable bowl fill water flow, comprising:

a toilet fill valve in the toilet tank, the toilet valve having a water inlet coupled to a water source outside of the toilet tank and a water outlet directing a flow of water into the toilet tank;

a bowl fill outlet port radially extending from a portion of a body of the toilet fill valve, the bowl fill outlet port being operatively coupled to the water inlet and the bowl fill outlet port comprising an integrally molded portion of the body of the toilet fill valve;

a bowl fill valve having a bowl fill valve inlet port and a bowl fill valve outlet port, wherein the bowl fill valve inlet port is compatible with the bowl fill outlet port and the bowl fill valve inlet port being directly coupled to the bowl fill outlet port and establishing direct contact between the bowl fill outlet port and the bowl fill valve inlet port, wherein the bowl fill valve inlet port and the bowl fill valve outlet port each comprise an integrally molded portion of the bowl fill valve;

a tube having a first end attached to the bowl fill valve outlet port and a second end directed into an overflow tube in the toilet tank, wherein a flow of water into the overflow tube is directed to a toilet bowl of the toilet; ~~and~~

the bowl fill valve being configured to supply an adjustable flow of water out the bowl fill valve outlet port through the tube and into the overflow tube for filling the toilet bowl during a flush cycle of a toilet;

the bowl fill outlet port further comprising a first thread;

the bowl fill valve inlet port further comprising a second thread, the first thread being compatible with the second thread, and the first thread being engaged with the second thread and affixing the bowl fill valve inlet port to the bowl fill outlet port; and

a sealing ring clamped between a portion of the bowl fill outlet port and a portion of the bowl fill valve inlet port to form a seal between the bowl fill outlet port and the bowl fill valve inlet port.

19. (Currently Amended) A method for providing an adjustable bowl fill water flow in a toilet fill valve, comprising the steps of:

operatively coupling a bowl fill outlet port to a water inlet of the toilet fill valve;

radially extending the bowl fill outlet port from a portion of a body of the toilet fill valve; and

coupling a bowl fill valve inlet port of a bowl fill valve directly to the bowl fill outlet port by mating a first thread associated with the bowl fill outlet port with a second thread associated with the bowl fill valve inlet port, wherein the bowl fill valve inlet port is coupled to the bowl fill outlet port via the first and second threads, the bowl fill valve inlet port being compatible with the bowl fill outlet port, and the bowl fill valve being configured to provide for the adjustable bowl fill water flow out a bowl fill valve outlet port of the bowl fill valve for filling a toilet bowl during a flush cycle of a toilet; and

clamping a sealing ring between a portion of the bowl fill valve inlet port and a portion of the bowl fill outlet port.

20-25. (Canceled)

REMARKS

Upon entry of this Preliminary Amendment, Applicants have added the priority information regarding this continuation application. Also, claims 1, 3, 4, 18, and 19 have been amended, and claims 8-17 and 12-25 have been canceled. It is believed that the foregoing amendments and additions add no new matter to the present application. Favorable action in regard to the application is earnestly solicited.

Respectfully submitted,

THOMAS, KAYDEN, HORSTEMEYER & RISLEY, L.L.P.

/Michael J. D'Aurelio/

Michael J. D'Aurelio 40,977

600 Galleria Parkway
Suite 1500
Atlanta, Georgia 30339-5948
(770) 933-9500

Electronic Acknowledgement Receipt

EFS ID:	8265605
Application Number:	12786904
International Application Number:	
Confirmation Number:	3473
Title of Invention:	Toilet Fill Valve with Adjustable Bowl Fill Flow
First Named Inventor/Applicant Name:	Michael J. Schuster
Customer Number:	24504
Filer:	Michael D Aurelio/Sofia Safina
Filer Authorized By:	Michael D Aurelio
Attorney Docket Number:	171901-1032
Receipt Date:	23-AUG-2010
Filing Date:	25-MAY-2010
Time Stamp:	15:38:17
Application Type:	Utility under 35 USC 111(a)

Payment information:

Submitted with Payment	no

File Listing:

Document Number	Document Description	File Name	File Size(Bytes)/ Message Digest	Multi Part /.zip	Pages (if appl.)
1	Supplemental Response or Supplemental Amendment	01210844.PDF	86815 23d0f4d7c6d46a42d4609efb5487296d26f112fa	no	8

Warnings:

Information:

Total Files Size (in bytes):	86815

This Acknowledgement Receipt evidences receipt on the noted date by the USPTO of the indicated documents, characterized by the applicant, and including page counts, where applicable. It serves as evidence of receipt similar to a Post Card, as described in MPEP 503.

New Applications Under 35 U.S.C. 111
If a new application is being filed and the application includes the necessary components for a filing date (see 37 CFR 1.53(b)-(d) and MPEP 506), a Filing Receipt (37 CFR 1.54) will be issued in due course and the date shown on this Acknowledgement Receipt will establish the filing date of the application.

National Stage of an International Application under 35 U.S.C. 371
If a timely submission to enter the national stage of an international application is compliant with the conditions of 35 U.S.C. 371 and other applicable requirements a Form PCT/DO/EO/903 indicating acceptance of the application as a national stage submission under 35 U.S.C. 371 will be issued in addition to the Filing Receipt, in due course.

New International Application Filed with the USPTO as a Receiving Office
If a new international application is being filed and the international application includes the necessary components for an international filing date (see PCT Article 11 and MPEP 1810), a Notification of the International Application Number and of the International Filing Date (Form PCT/RO/105) will be issued in due course, subject to prescriptions concerning national security, and the date shown on this Acknowledgement Receipt will establish the international filing date of the application.

UNITED STATES PATENT AND TRADEMARK OFFICE

UNITED STATES DEPARTMENT OF COMMERCE
U.S. Patent and Trademark Office
Address: COMMISSIONER FOR PATENTS
P.O. Box 1450
Alexandria, Virginia 22313-1450
www.uspto.gov

24504 e 08/11/2010

THOMAS, KAYDEN, HORSTEMEYER & RISLEY, LLP
600 GALLERIA PARKWAY, S.E.
STE 1500
ATLANTA, GA 30339-5994

Paper No.

Application No.:	**12/786,904**	**Date Mailed:**	**08/11/2010**
First Named Inventor:	Schuster, Michael, J.	Examiner:	,
Attorney Docket No.:	171901-1032	Art Unit:	3751
Confirmation No.:	3473	Filing Date:	05/25/2010

Please find attached an Office communication concerning this application or proceeding.

Commissioner for Patents

PTO-90c (Rev.08-06)

Notice of Non-Compliant Amendment (37 CFR 1.121)	Application No. 12/786,904	Applicant(s) SCHUSTER ET AL.	
		Art Unit 3998	

-- The MAILING DATE of this communication appears on the cover sheet with the correspondence address --

The amendment document filed on 25 May, 2010 is considered non-compliant because it has failed to meet the requirements of 37 CFR 1.121 or 1.4. In order for the amendment document to be compliant, correction of the following item(s) is required.

THE FOLLOWING MARKED (X) ITEM(S) CAUSE THE AMENDMENT DOCUMENT TO BE NON-COMPLIANT:

☐ 1. Amendments to the specification:
- ☐ A. Amended paragraph(s) do not include markings.
- ☐ B. New paragraph(s) should not be underlined.
- ☐ C. Other _____.

☐ 2. Abstract:
- ☐ A. Not presented on a separate sheet. 37 CFR 1.72.
- ☐ B. Other _____.

☐ 3. Amendments to the drawings:
- ☐ A. The drawings are not properly identified in the top margin as "Replacement Sheet," "New Sheet," or "Annotated Sheet" as required by 37 CFR 1.121(d).
- ☐ B. The practice of submitting proposed drawing correction has been eliminated. Replacement drawings showing amended figures, without markings, in compliance with 37 CFR 1.84 are required.
- ☐ C. Other _____.

☒ 4. Amendments to the claims:
- ☐ A. A complete listing of all of the claims is not present.
- ☐ B. The listing of claims does not include the text of all pending claims (including withdrawn claims)
- ☒ C. Each claim has not been provided with the proper status identifier, and as such, the individual status of each claim cannot be identified. Note: the status of every claim must be indicated after its claim number by using one of the following status identifiers: (Original), (Currently amended), (Canceled), (Previously presented), (New), (Not entered), (Withdrawn) and (Withdrawn-currently amended).
- ☐ D. The claims of this amendment paper have not been presented in ascending numerical order.
- ☒ E. Other: *Claim 19 missing ststus identifier*.

☐ 5. Other (e.g., the amendment is unsigned or not signed in accordance with 37 CFR 1.4): For further explanation of the amendment format required by 37 CFR 1.121, see MPEP § 714.

TIME PERIODS FOR FILING A REPLY TO THIS NOTICE:

1. Applicant is given **no new time period** if the non-compliant amendment is an after-final amendment or an amendment filed after allowance, or a drawing submission (only) If applicant wishes to resubmit the non-compliant after-final amendment with corrections, the **entire corrected amendment** must be resubmitted.

2. Applicant is given **one month**, or thirty (30) days, whichever is longer, from the mail date of this notice to supply the correction, if the non-compliant amendment is one of the following: a preliminary amendment, a non-final amendment (including a submission for a request for continued examination (RCE) under 37 CFR 1.114), a supplemental amendment filed within a suspension period under 37 CFR 1.103(a) or (c), and an amendment filed in response to a Quayle action. If any of above boxes 1 to 4 are checked, the correction required is only the corrected section of the non-compliant amendment in compliance with 37 CFR 1.121.

Extensions of time are available under 37 CFR 1.136(a) only if the non-compliant amendment is a non-final amendment or an amendment filed in response to a *Quayle* action.
Failure to timely respond to this notice will result in:
Abandonment of the application if the non-compliant amendment is a non-final amendment or an amendment filed in response to a *Quayle* action; or
Non-entry of the amendment if the non-compliant amendment is a preliminary amendment or supplemental amendment.

Legal Instruments Examiner (LIE), if applicable /CORALIA BETANCOURT/ Telephone No: (571)272-0509

UNITED STATES PATENT AND TRADEMARK OFFICE

UNITED STATES DEPARTMENT OF COMMERCE
United States Patent and Trademark Office
Address: COMMISSIONER FOR PATENTS
P.O. Box 1450
Alexandria, Virginia 22313-1450
www.uspto.gov

APPLICATION NUMBER	FILING or 371(c) DATE	GRP ART UNIT	FIL FEE REC'D	ATTY.DOCKET.NO	TOT CLAIMS	IND CLAIMS
12/786,904	05/25/2010	3751	462	171901-1032	9	3

CONFIRMATION NO. 3473

FILING RECEIPT

24504
THOMAS, KAYDEN, HORSTEMEYER & RISLEY, LLP
600 GALLERIA PARKWAY, S.E.
STE 1500
ATLANTA, GA 30339-5994

OC000000041970852

Date Mailed: 06/08/2010

Receipt is acknowledged of this non-provisional patent application. The application will be taken up for examination in due course. Applicant will be notified as to the results of the examination. Any correspondence concerning the application must include the following identification information: the U.S. APPLICATION NUMBER, FILING DATE, NAME OF APPLICANT, and TITLE OF INVENTION. Fees transmitted by check or draft are subject to collection. Please verify the accuracy of the data presented on this receipt. **If an error is noted on this Filing Receipt, please submit a written request for a Filing Receipt Correction. Please provide a copy of this Filing Receipt with the changes noted thereon. If you received a "Notice to File Missing Parts" for this application, please submit any corrections to this Filing Receipt with your reply to the Notice. When the USPTO processes the reply to the Notice, the USPTO will generate another Filing Receipt incorporating the requested corrections**

Applicant(s)

Michael J. Schuster, Joliet, IL;
Larry Schneider, Wadsworth, IL;

Assignment For Published Patent Application

MJSI, INC., Shorewood, IL

Power of Attorney: The patent practitioners associated with Customer Number 33852

Domestic Priority data as claimed by applicant

This application is a CON of 10/958,797 10/05/2004
which is a CIP of 10/798,606 03/11/2004 PAT 6,823,889

Foreign Applications

If Required, Foreign Filing License Granted: 06/04/2010

The country code and number of your priority application, to be used for filing abroad under the Paris Convention, is **US 12/786,904**

Projected Publication Date: Request for Non-Publication Acknowledged

Non-Publication Request: Yes

Early Publication Request: No
**** SMALL ENTITY ****

Title

Toilet Fill Valve with Adjustable Bowl Fill Flow

Preliminary Class

004

PROTECTING YOUR INVENTION OUTSIDE THE UNITED STATES

Since the rights granted by a U.S. patent extend only throughout the territory of the United States and have no effect in a foreign country, an inventor who wishes patent protection in another country must apply for a patent in a specific country or in regional patent offices. Applicants may wish to consider the filing of an international application under the Patent Cooperation Treaty (PCT). An international (PCT) application generally has the same effect as a regular national patent application in each PCT-member country. The PCT process **simplifies** the filing of patent applications on the same invention in member countries, but **does not result** in a grant of "an international patent" and does not eliminate the need of applicants to file additional documents and fees in countries where patent protection is desired.

Almost every country has its own patent law, and a person desiring a patent in a particular country must make an application for patent in that country in accordance with its particular laws. Since the laws of many countries differ in various respects from the patent law of the United States, applicants are advised to seek guidance from specific foreign countries to ensure that patent rights are not lost prematurely.

Applicants also are advised that in the case of inventions made in the United States, the Director of the USPTO must issue a license before applicants can apply for a patent in a foreign country. The filing of a U.S. patent application serves as a request for a foreign filing license. The application's filing receipt contains further information and guidance as to the status of applicant's license for foreign filing.

Applicants may wish to consult the USPTO booklet, "General Information Concerning Patents" (specifically, the section entitled "Treaties and Foreign Patents") for more information on timeframes and deadlines for filing foreign patent applications. The guide is available either by contacting the USPTO Contact Center at 800-786-9199, or it can be viewed on the USPTO website at http://www.uspto.gov/web/offices/pac/doc/general/index.html.

For information on preventing theft of your intellectual property (patents, trademarks and copyrights), you may wish to consult the U.S. Government website, http://www.stopfakes.gov. Part of a Department of Commerce initiative, this website includes self-help "toolkits" giving innovators guidance on how to protect intellectual property in specific countries such as China, Korea and Mexico. For questions regarding patent enforcement issues, applicants may call the U.S. Government hotline at 1-866-999-HALT (1-866-999-4158).

LICENSE FOR FOREIGN FILING UNDER

Title 35, United States Code, Section 184

Title 37, Code of Federal Regulations, 5.11 & 5.15

GRANTED

The applicant has been granted a license under 35 U.S.C. 184, if the phrase "IF REQUIRED, FOREIGN FILING LICENSE GRANTED" followed by a date appears on this form. Such licenses are issued in all applications where the conditions for issuance of a license have been met, regardless of whether or not a license may be required as

set forth in 37 CFR 5.15. The scope and limitations of this license are set forth in 37 CFR 5.15(a) unless an earlier license has been issued under 37 CFR 5.15(b). The license is subject to revocation upon written notification. The date indicated is the effective date of the license, unless an earlier license of similar scope has been granted under 37 CFR 5.13 or 5.14.

This license is to be retained by the licensee and may be used at any time on or after the effective date thereof unless it is revoked. This license is automatically transferred to any related applications(s) filed under 37 CFR 1.53(d). This license is not retroactive.

The grant of a license does not in any way lessen the responsibility of a licensee for the security of the subject matter as imposed by any Government contract or the provisions of existing laws relating to espionage and the national security or the export of technical data. Licensees should apprise themselves of current regulations especially with respect to certain countries, of other agencies, particularly the Office of Defense Trade Controls, Department of State (with respect to Arms, Munitions and Implements of War (22 CFR 121-128)); the Bureau of Industry and Security, Department of Commerce (15 CFR parts 730-774); the Office of Foreign AssetsControl, Department of Treasury (31 CFR Parts 500+) and the Department of Energy.

NOT GRANTED

No license under 35 U.S.C. 184 has been granted at this time, if the phrase "IF REQUIRED, FOREIGN FILING LICENSE GRANTED" DOES NOT appear on this form. Applicant may still petition for a license under 37 CFR 5.12, if a license is desired before the expiration of 6 months from the filing date of the application. If 6 months has lapsed from the filing date of this application and the licensee has not received any indication of a secrecy order under 35 U.S.C. 181, the licensee may foreign file the application pursuant to 37 CFR 5.15(b).

PTO/SB/08a (01-10)
Approved for use through 07/31/2012. OMB 0651-0031
U.S. Patent and Trademark Office; U.S. DEPARTMENT OF COMMERCE

Under the Paperwork Reduction Act of 1995, no persons are required to respond to a collection of information unless it contains a valid OMB control number.

INFORMATION DISCLOSURE STATEMENT BY APPLICANT (Not for submission under 37 CFR 1.99)		
	Application Number	
	Filing Date	2010-05-25
	First Named Inventor	Michael J. Schuster et al.
	Art Unit	tba
	Examiner Name	tba
	Attorney Docket Number	171901-1031

U.S.PATENTS						Remove
Examiner Initial*	Cite No	Patent Number	Kind Code[1]	Issue Date	Name of Patentee or Applicant of cited Document	Pages,Columns,Lines where Relevant Passages or Relevant Figures Appear
	1	1787601		1931-01-06	Swanberg	
	2	2087503		1937-07-20	Clemmons	
	3	2512176		1950-06-20	Shaffer	
	4	2791235		1957-05-07	Smith	
	5	3040769		1962-06-26	Lamb	
	6	3086546		1963-04-23	Brown	
	7	3172128		1965-03-09	Ducey	
	8	3457947		1969-07-29	Fitzgerald	

INFORMATION DISCLOSURE STATEMENT BY APPLICANT (Not for submission under 37 CFR 1.99)	Application Number	
	Filing Date	2010-05-25
	First Named Inventor	Michael J. Schuster et al.
	Art Unit	tba
	Examiner Name	tba
	Attorney Docket Number	171901-1031

	9	3744064		1973-07-10	Preston	
	10	4351071		1982-09-28	Clar	
	11	4700413		1987-10-20	Lopez	
	12	4770388		1988-09-13	Carman	
	13	5083323		1992-01-28	Cannan	
	14	5228152		1993-07-20	Fraley	
	15	5232011		1993-08-03	Royalty	
	16	5327931		1994-07-12	Royalty	
	17	5442820		1995-08-22	Becker	
	18	5542448		1996-08-06	Campbell et al.	
	19	5742951		1998-04-28	Wright et al.	

INFORMATION DISCLOSURE STATEMENT BY APPLICANT (Not for submission under 37 CFR 1.99)	Application Number	
	Filing Date	2010-05-25
	First Named Inventor	Michael J. Schuster et al.
	Art Unit	tba
	Examiner Name	tba
	Attorney Docket Number	171901-1031

	20	5775366		1998-07-07	Ray	
	21	6219856	B1	2001-04-24	Alles	
	22	6385788	B1	2002-05-14	Wasielewski	
	23	0136128		1873-02-25	Bralley	
	24	0994746		1911-06-13	Dwyer et al.	
	25	0996743		1911-07-04	Yancey	
	26	1113057		1914-10-06	Schumann	
	27	2465866		1949-03-29	Gaines	
	28	2736037		1956-02-28	Hardie	
	29	2799865		1957-07-23	Schuster	
	30	3321972		1967-05-30	Goldtrap	

INFORMATION DISCLOSURE STATEMENT BY APPLICANT (Not for submission under 37 CFR 1.99)	Application Number	
	Filing Date	2010-05-25
	First Named Inventor	Michael J. Schuster et al.
	Art Unit	tba
	Examiner Name	tba
	Attorney Docket Number	171901-1031

	31	3762395		1973-10-02	Taylor	
	32	4134164		1979-01-16	Sanmartin Rial	
	33	4505231		1985-03-19	Syler	
	34	4527295		1985-07-09	Lacore	
	35	4898124		1990-02-06	Granberg et al.	
	36	5794279		1998-08-18	Schwartz	
	37	5862537		1999-01-26	Osmond	
	38	6295660		2001-10-02	Schuster	
	39	3986216		1976-10-19	Davis et al.	
	40	3994628		1976-11-30	Kemper	
	41	4007498		1977-02-15	Pearson	

INFORMATION DISCLOSURE STATEMENT BY APPLICANT (Not for submission under 37 CFR 1.99)	Application Number	
	Filing Date	2010-05-25
	First Named Inventor	Michael J. Schuster et al.
	Art Unit	tba
	Examiner Name	tba
	Attorney Docket Number	171901-1031

	42	4017916		1977-04-19	Pearson	
	43	4032822		1977-06-28	Un	
	44	4090532		1978-05-23	Story, Jr.	
	45	4145775		1979-03-27	Butler	
	46	4392260		1983-07-12	Bensen	
	47	4707867		1987-11-24	Kawabe et al.	
	48	4764996		1988-08-23	Pino	
	49	4793588		1988-12-27	Laverty, Jr.	
	50	4918764		1990-04-24	Haselswerdt et al.	
	51	4980932		1991-01-01	Stemples	
	52	5007452		1991-04-16	Antunez	

INFORMATION DISCLOSURE STATEMENT BY APPLICANT (Not for submission under 37 CFR 1.99)	Application Number	
	Filing Date	2010-05-25
	First Named Inventor	Michael J. Schuster et al.
	Art Unit	tba
	Examiner Name	tba
	Attorney Docket Number	171901-1031

	53	5036553		1991-08-06	Sanderson	
	54	5052060		1991-10-01	Makita et al.	
	55	5134729		1992-08-04	Shaw	
	56	5245710		1993-09-21	Haselswerdt et al.	
	57	5362026		1994-11-08	Kobayashi et al.	
	58	5432959		1995-07-18	Ellsworth et al.	
	59	5469586		1995-11-28	Tsutsui et al.	
	60	5708991		1998-01-20	DeMarco	
	61	5715860		1998-02-10	Horad	
	62	6202227	B1	2001-03-20	Gurowitz	
	63	6209576	B1	2001-04-03	Davis	

INFORMATION DISCLOSURE STATEMENT BY APPLICANT (Not for submission under 37 CFR 1.99)	Application Number	
	Filing Date	2010-05-25
	First Named Inventor	Michael J. Schuster et al.
	Art Unit	tba
	Examiner Name	tba
	Attorney Docket Number	171901-1031

	64	6263519	B1	2001-07-24	Parsons et al.	
	65	6560790	B2	2003-05-13	Saar et al.	
	66	4420845		1983-12-20	Antunez	
	67	6823889		2004-11-30	Schuster	
	68	6409221	B1	2002-06-25	Robinson et al.	
	69	5926868	A	1999-07-27	Bjerke, Thomas E.	
	70	5624073		1997-04-29	Mueller et al.	

If you wish to add additional U.S. Patent citation information please click the Add button. Add

U.S.PATENT APPLICATION PUBLICATIONS Remove

Examiner Initial*	Cite No	Publication Number	Kind Code[1]	Publication Date	Name of Patentee or Applicant of cited Document	Pages,Columns,Lines where Relevant Passages or Relevant Figures Appear
	1	20020092090	A1	2002-07-18	Johnson	
	2	20020162166	A1	2002-11-07	Saar et al.	

If you wish to add additional U.S. Published Application citation information please click the Add button. Add

EFS Web 2.1.17

INFORMATION DISCLOSURE STATEMENT BY APPLICANT (Not for submission under 37 CFR 1.99)	Application Number	
	Filing Date	2010-05-25
	First Named Inventor	Michael J. Schuster et al.
	Art Unit	tba
	Examiner Name	tba
	Attorney Docket Number	171901-1031

FOREIGN PATENT DOCUMENTS Remove

Examiner Initial*	Cite No	Foreign Document Number[3]	Country Code[2] ¡	Kind Code[4]	Publication Date	Name of Patentee or Applicant of cited Document	Pages,Columns,Lines where Relevant Passages or Relevant Figures Appear	T[5]
	1							☐

If you wish to add additional Foreign Patent Document citation information please click the Add button Add

NON-PATENT LITERATURE DOCUMENTS Remove

Examiner Initials*	Cite No	Include name of the author (in CAPITAL LETTERS), title of the article (when appropriate), title of the item (book, magazine, journal, serial, symposium, catalog, etc), date, pages(s), volume-issue number(s), publisher, city and/or country where published.	T[5]
	1	US Patent 6,823,889, File History, 2004-2005 (Grandparent Patent to this Application).	☐
	2	US Patent Application 10/958,797, File History, 2004-2010 (Parent Patent to this Application)	☐

If you wish to add additional non-patent literature document citation information please click the Add button Add

EXAMINER SIGNATURE

Examiner Signature		Date Considered	

*EXAMINER: Initial if reference considered, whether or not citation is in conformance with MPEP 609. Draw line through a citation if not in conformance and not considered. Include copy of this form with next communication to applicant.

[1] See Kind Codes of USPTO Patent Documents at www.USPTO.GOV or MPEP 901.04. [2] Enter office that issued the document, by the two-letter code (WIPO Standard ST.3). [3] For Japanese patent documents, the indication of the year of the reign of the Emperor must precede the serial number of the patent document. [4] Kind of document by the appropriate symbols as indicated on the document under WIPO Standard ST.16 if possible. [5] Applicant is to place a check mark here if English language translation is attached.

INFORMATION DISCLOSURE STATEMENT BY APPLICANT (Not for submission under 37 CFR 1.99)	Application Number	
	Filing Date	2010-05-25
	First Named Inventor	Michael J. Schuster et al.
	Art Unit	tba
	Examiner Name	tba
	Attorney Docket Number	171901-1031

CERTIFICATION STATEMENT

Please see 37 CFR 1.97 and 1.98 to make the appropriate selection(s):

☐ That each item of information contained in the information disclosure statement was first cited in any communication from a foreign patent office in a counterpart foreign application not more than three months prior to the filing of the information disclosure statement. See 37 CFR 1.97(e)(1).

OR

☐ That no item of information contained in the information disclosure statement was cited in a communication from a foreign patent office in a counterpart foreign application, and, to the knowledge of the person signing the certification after making reasonable inquiry, no item of information contained in the information disclosure statement was known to any individual designated in 37 CFR 1.56(c) more than three months prior to the filing of the information disclosure statement. See 37 CFR 1.97(e)(2).

☐ See attached certification statement.

☐ Fee set forth in 37 CFR 1.17 (p) has been submitted herewith.

☒ None

SIGNATURE

A signature of the applicant or representative is required in accordance with CFR 1.33, 10.18. Please see CFR 1.4(d) for the form of the signature.

Signature	/Michael J. D'Aurelio/	Date (YYYY-MM-DD)	2010-05-25
Name/Print	Michael J. D'Aurelio	Registration Number	40,977

This collection of information is required by 37 CFR 1.97 and 1.98. The information is required to obtain or retain a benefit by the public which is to file (and by the USPTO to process) an application. Confidentiality is governed by 35 U.S.C. 122 and 37 CFR 1.14. This collection is estimated to take 1 hour to complete, including gathering, preparing and submitting the completed application form to the USPTO. Time will vary depending upon the individual case. Any comments on the amount of time you require to complete this form and/or suggestions for reducing this burden, should be sent to the Chief Information Officer, U.S. Patent and Trademark Office, U.S. Department of Commerce, P.O. Box 1450, Alexandria, VA 22313-1450. DO NOT SEND FEES OR COMPLETED FORMS TO THIS ADDRESS. **SEND TO: Commissioner for Patents, P.O. Box 1450, Alexandria, VA 22313-1450.**

Privacy Act Statement

The Privacy Act of 1974 (P.L. 93-579) requires that you be given certain information in connection with your submission of the attached form related to a patent application or patent. Accordingly, pursuant to the requirements of the Act, please be advised that: (1) the general authority for the collection of this information is 35 U.S.C. 2(b)(2); (2) furnishing of the information solicited is voluntary; and (3) the principal purpose for which the information is used by the U.S. Patent and Trademark Office is to process and/or examine your submission related to a patent application or patent. If you do not furnish the requested information, the U.S. Patent and Trademark Office may not be able to process and/or examine your submission, which may result in termination of proceedings or abandonment of the application or expiration of the patent.

The information provided by you in this form will be subject to the following routine uses:

1. The information on this form will be treated confidentially to the extent allowed under the Freedom of Information Act (5 U.S.C. 552) and the Privacy Act (5 U.S.C. 552a). Records from this system of records may be disclosed to the Department of Justice to determine whether the Freedom of Information Act requires disclosure of these record s.

2. A record from this system of records may be disclosed, as a routine use, in the course of presenting evidence to a court, magistrate, or administrative tribunal, including disclosures to opposing counsel in the course of settlement negotiations.

3. A record in this system of records may be disclosed, as a routine use, to a Member of Congress submitting a request involving an individual, to whom the record pertains, when the individual has requested assistance from the Member with respect to the subject matter of the record.

4. A record in this system of records may be disclosed, as a routine use, to a contractor of the Agency having need for the information in order to perform a contract. Recipients of information shall be required to comply with the requirements of the Privacy Act of 1974, as amended, pursuant to 5 U.S.C. 552a(m).

5. A record related to an International Application filed under the Patent Cooperation Treaty in this system of records may be disclosed, as a routine use, to the International Bureau of the World Intellectual Property Organization, pursuant to the Patent Cooperation Treaty.

6. A record in this system of records may be disclosed, as a routine use, to another federal agency for purposes of National Security review (35 U.S.C. 181) and for review pursuant to the Atomic Energy Act (42 U.S.C. 218(c)).

7. A record from this system of records may be disclosed, as a routine use, to the Administrator, General Services, or his/her designee, during an inspection of records conducted by GSA as part of that agency's responsibility to recommend improvements in records management practices and programs, under authority of 44 U.S.C. 2904 and 2906. Such disclosure shall be made in accordance with the GSA regulations governing inspection of records for this purpose, and any other relevant (i.e., GSA or Commerce) directive. Such disclosure shall not be used to make determinations about individuals.

8. A record from this system of records may be disclosed, as a routine use, to the public after either publication of the application pursuant to 35 U.S.C. 122(b) or issuance of a patent pursuant to 35 U.S.C. 151. Further, a record may be disclosed, subject to the limitations of 37 CFR 1.14, as a routine use, to the public if the record was filed in an application which became abandoned or in which the proceedings were terminated and which application is referenced by either a published application, an application open to public inspections or an issued patent.

9. A record from this system of records may be disclosed, as a routine use, to a Federal, State, or local law enforcement agency, if the USPTO becomes aware of a violation or potential violation of law or regulation.

Docket No. 1008-100501 **PATENT APPLICATION**

COMBINED DECLARATION AND POWER OF ATTORNEY

As a below named inventor, I hereby declare that:

My residence, post office address, and citizenship are as stated below next to my name.

I believe I am the original, first and sole inventor (if only one name is listed below) or an original, first and joint inventor (if plural names are listed below) of the subject matter which is claimed and for which a patent is sought on the invention entitled:

TOILET FILL VALVE WITH ADJUSTABLE BOWL FILL FLOW

the specification of which

☒ is attached hereto.

☐ was filed on _____ as U.S. Patent Application Serial Number _____.

☐ was filed on _____ as a U.S. Patent Application under Express Mail Number _____.

☐ is set forth in PCT International Application Number _____ filed on _____;
☐ and as amended under PCT Article 19 on _____

I hereby state that I have reviewed and understand the contents of the above identified specification, including the claims, as amended by any amendment referred to above. I acknowledge the duty to disclose information which is material to the patentability of the above identified invention as defined in Title 37, Code of Federal Regulations §1.56.

CLAIM FOR BENEFIT OF U.S. PROVISIONAL APPLICATION(S) UNDER 35 U.S.C. §119(e)

I hereby claim the benefit under Title 35, United States Code §119(e) of any United States provisional application(s) listed below:

APPLICATION SERIAL NUMBER	FILING DATE

CLAIM FOR BENEFIT OF U.S. APPLICATION(S) UNDER 35 U.S.C. §120

I hereby claim the benefit under 35 U.S.C. §120 of any United States application(s) or PCT International Application(s) designating the United States of America listed below and, insofar as the subject matter of each of the claims of this application is not disclosed in the prior application(s) in the manner provided by the first paragraph of 35 USC §112, I acknowledge the duty to disclose material information as defined in 37 CFR §1.56(a) which became available between the filing date of the prior application and the national or PCT international filing date of this application.

APPLICATION SERIAL NUMBER	FILING DATE	STATUS (patented/pending/abandoned)
10/798,606	March 11, 2004	Pending

CLAIM OF FOREIGN PRIORITY UNDER 35 U.S.C. §119

I hereby claim foreign priority benefits under Title 35, United States Code Section 119 of any foreign application(s) for patent or inventor(s) certificate listed below and have also identified below any foreign application for patent or inventor(s) certificate having a filing date before that of the application of which priority is claimed:

COUNTRY	APPLICATION NUMBER	DATE FILED	PRIORITY CLAIMED UNDER 35 U.S.C. §119
			☐ Yes ☐ No
			☐ Yes ☐ No

POWER OF ATTORNEY

As a named inventor, I hereby appoint the practitioners associated with

Customer Number: 33852

as my/our attorney(s) or agent(s) to prosecute this application and to transact all business in the United States Patent and Trademark Office connected therewith.

Correspondence Address:

Please direct all correspondence to the address associated with the above-mentioned customer number, which is D'Aurelio & Mathews, LLC, 96 Church Street, Chagrin Falls, Ohio 44022.

Please direct all telephone calls in the first instance to:

Michael J. D'Aurelio
Telephone: (440) 729-7450
Facsimile: (440) 729-7465

I hereby declare that all statements made herein of my own knowledge are true and that all statements made on information and belief are believed to be true; and further that these statements were made with knowledge that willful false statements and the like are punishable by fine or imprisonment, or both, under Section 1001 of Title 18 of the United States Code, and that such willful false statements may jeopardize the validity of the application or any patent issued therein.

Signature of Sole or First Inventor

Full Name of Inventor: Michael J. Schuster
Residence: 612 Nicholson Street, Joliet, Illinois 60435
Post Office Address: 612 Nicholson Street, Joliet, Illinois 60435
Citizenship: United States

Inventor's Signature: Michael J. Schuster **Date:** 9-22-04

Signature of Second Inventor

Full Name of Inventor: Larry Schneider
Residence: 39155 N. Pine Grove Avenue, Wadsworth, Illinois 60083
Post Office Address: 39155 N. Pine Grove Avenue, Wadsworth, Illinois 60083
Citizenship: United States

Inventor's Signature: Larry Schneider **Date:** 9/23/04

Signature of Third Inventor

Full Name of Inventor: N/A
Residence: N/A
Post Office Address: N/A
Citizenship: N/A

Inventor's Signature: _____ **Date:** _____

Electronic Patent Application Fee Transmittal

Application Number:	
Filing Date:	
Title of Invention:	Toilet Fill Valve with Adjustable Bowl Fill Flow
First Named Inventor/Applicant Name:	Michael J. Schuster
Filer:	Michael D Aurelio
Attorney Docket Number:	171901-1032

Filed as Small Entity

Utility under 35 USC 111(a) Filing Fees

Description	Fee Code	Quantity	Amount	Sub-Total in USD($)
Basic Filing:				
Utility filing Fee (Electronic filing)	4011	1	82	82
Utility Search Fee	2111	1	270	270
Utility Examination Fee	2311	1	110	110
Pages:				
Claims:				
Miscellaneous-Filing:				
Petition:				
Patent-Appeals-and-Interference:				

Description	Fee Code	Quantity	Amount	Sub-Total in USD($)
Post-Allowance-and-Post-Issuance:				
Extension-of-Time:				
Miscellaneous:				
			Total in USD ($)	**462**

Electronic Acknowledgement Receipt	
EFS ID:	7680321
Application Number:	12786904
International Application Number:	
Confirmation Number:	3473
Title of Invention:	Toilet Fill Valve with Adjustable Bowl Fill Flow
First Named Inventor/Applicant Name:	Michael J. Schuster
Customer Number:	24504
Filer:	Michael D Aurelio
Filer Authorized By:	
Attorney Docket Number:	171901-1032
Receipt Date:	25-MAY-2010
Filing Date:	
Time Stamp:	14:50:11
Application Type:	Utility under 35 USC 111(a)

Payment information:

Submitted with Payment	yes
Payment Type	Credit Card
Payment was successfully received in RAM	$462
RAM confirmation Number	1091
Deposit Account	200778
Authorized User	D'AURELIO,MICHAEL J
The Director of the USPTO is hereby authorized to charge indicated fees and credit any overpayment as follows: Charge any Additional Fees required under 37 C.F.R. Section 1.21 (Miscellaneous fees and charges)	

File Listing:

Document Number	Document Description	File Name	File Size(Bytes)/ Message Digest	Multi Part /.zip	Pages (if appl.)
1	Application Data Sheet	01155336.PDF	1071142 69b8b2cd12bb27837320269b7ddec13955a2a411	no	5
Warnings:					
Information:					
2		01158732.PDF	130806 3ed166ec39c83b38f6c627748f64244d7a29ca23	yes	23
	Multipart Description/PDF files in .zip description				
	Document Description		**Start**	**End**	
	Specification		1	15	
	Claims		16	22	
	Abstract		23	23	
Warnings:					
Information:					
3	Drawings-only black and white line drawings	01158738.PDF	89354 fb18fde055ae174175a2bcbe11ae7e6f5ca24949	no	9
Warnings:					
Information:					
4	Preliminary Amendment	01158757.PDF	86582 6bd4f186f7bf42f31209c6cefcefa8c5a12b2d52	no	8
Warnings:					
Information:					
5	Transmittal Letter	01158751.PDF	79674 de3326632cb43f8179406556ecfcee93ed143263	no	2
Warnings:					
Information:					
6	Information Disclosure Statement (IDS) Filed (SB/08)	01157504.PDF	1383705 1aae7914e94d0a27f60a020566c820f6d8b57f74	no	10
Warnings:					
Information:					
7	NPL Documents	01158651.PDF	9810422 d233ef35a1e2837f1f425501b354e9961ff7f9a0	no	263

Warnings:					
Information:					
8	NPL Documents	01158654.PDF	2694010 bc9678c42543be56e405ca9dd067408 68fb6e132	no	65
Warnings:					
Information:					
9	Oath or Declaration filed	01159107.PDF	101533 3e18b921763ed1222b6d147e17c159f080b4ac49	no	2
Warnings:					
Information:					
10	Fee Worksheet (PTO-875)	fee-info.pdf	32831 b036bf1f279e3b2ad1c81fa19ca88475f73c82d2	no	2
Warnings:					
Information:					
		Total Files Size (in bytes):	15480059		

This Acknowledgement Receipt evidences receipt on the noted date by the USPTO of the indicated documents, characterized by the applicant, and including page counts, where applicable. It serves as evidence of receipt similar to a Post Card, as described in MPEP 503.

<u>New Applications Under 35 U.S.C. 111</u>
If a new application is being filed and the application includes the necessary components for a filing date (see 37 CFR 1.53(b)-(d) and MPEP 506), a Filing Receipt (37 CFR 1.54) will be issued in due course and the date shown on this Acknowledgement Receipt will establish the filing date of the application.

<u>National Stage of an International Application under 35 U.S.C. 371</u>
If a timely submission to enter the national stage of an international application is compliant with the conditions of 35 U.S.C. 371 and other applicable requirements a Form PCT/DO/EO/903 indicating acceptance of the application as a national stage submission under 35 U.S.C. 371 will be issued in addition to the Filing Receipt, in due course.

<u>New International Application Filed with the USPTO as a Receiving Office</u>
If a new international application is being filed and the international application includes the necessary components for an international filing date (see PCT Article 11 and MPEP 1810), a Notification of the International Application Number and of the International Filing Date (Form PCT/RO/105) will be issued in due course, subject to prescriptions concerning national security, and the date shown on this Acknowledgement Receipt will establish the international filing date of the application.

PTO/SB/14 (07-07)
Approved for use through 06/30/2010. OMB 0651-0032
U.S. Patent and Trademark Office; U.S. DEPARTMENT OF COMMERCE
Under the Paperwork Reduction Act of 1995, no persons are required to respond to a collection of information unless it contains a valid OMB control number.

Application Data Sheet 37 CFR 1.76	Attorney Docket Number	171901-1032
	Application Number	
Title of Invention	Toilet Fill Valve with Adjustable Bowl Fill Flow	

The application data sheet is part of the provisional or nonprovisional application for which it is being submitted. The following form contains the bibliographic data arranged in a format specified by the United States Patent and Trademark Office as outlined in 37 CFR 1.76.
This document may be completed electronically and submitted to the Office in electronic format using the Electronic Filing System (EFS) or the document may be printed and included in a paper filed application.

Secrecy Order 37 CFR 5.2

☐ Portions or all of the application associated with this Application Data Sheet may fall under a Secrecy Order pursuant to 37 CFR 5.2 (Paper filers only. Applications that fall under Secrecy Order may not be filed electronically.)

Applicant Information:

Applicant 1 Remove

Applicant Authority ◉ Inventor ◯ Legal Representative under 35 U.S.C. 117 ◯ Party of Interest under 35 U.S.C. 118

Prefix	Given Name	Middle Name	Family Name	Suffix
	Michael	J.	Schuster	

Residence Information (Select One) ◉ US Residency ◯ Non US Residency ◯ Active US Military Service

City	Joliet	State/Province	IL	Country of Residence i	US

Citizenship under 37 CFR 1.41(b) i US

Mailing Address of Applicant:

Address 1	612 Nicholson Street		
Address 2			
City	Joliet	**State/Province**	IL
Postal Code	60435	**Country**i	US

Applicant 2 Remove

Applicant Authority ◉ Inventor ◯ Legal Representative under 35 U.S.C. 117 ◯ Party of Interest under 35 U.S.C. 118

Prefix	Given Name	Middle Name	Family Name	Suffix
	Larry		Schneider	

Residence Information (Select One) ◉ US Residency ◯ Non US Residency ◯ Active US Military Service

City	Wadsworth	State/Province	IL	Country of Residence i	US

Citizenship under 37 CFR 1.41(b) i US

Mailing Address of Applicant:

Address 1	39155 N. Pine Grove Avenue		
Address 2			
City	Wadsworth	**State/Province**	IL
Postal Code	60083	**Country**i	US

All Inventors Must Be Listed - Additional Inventor Information blocks may be generated within this form by selecting the **Add** button. Add

Correspondence Information:

Enter either Customer Number or complete the Correspondence Information section below.
For further information see 37 CFR 1.33(a).

☐ **An Address is being provided for the correspondence Information of this application.**

PTO/SB/14 (07-07)
Approved for use through 06/30/2010. OMB 0651-0032
U.S. Patent and Trademark Office; U.S. DEPARTMENT OF COMMERCE
Under the Paperwork Reduction Act of 1995, no persons are required to respond to a collection of information unless it contains a valid OMB control number.

Application Data Sheet 37 CFR 1.76	Attorney Docket Number	171901-1032
	Application Number	
Title of Invention	Toilet Fill Valve with Adjustable Bowl Fill Flow	

Customer Number	24504		
Email Address	mike.daurelio@tkhr.com	Add Email	Remove Email

Application Information:

Title of the Invention	Toilet Fill Valve with Adjustable Bowl Fill Flow		
Attorney Docket Number	171901-1032	**Small Entity Status Claimed**	☒
Application Type	Nonprovisional		
Subject Matter	Utility		
Suggested Class (if any)		**Sub Class (if any)**	
Suggested Technology Center (if any)			
Total Number of Drawing Sheets (if any)	9	**Suggested Figure for Publication (if any)**	

Publication Information:

☐	Request Early Publication (Fee required at time of Request 37 CFR 1.219)
☒	**Request Not to Publish.** I hereby request that the attached application not be published under 35 U.S. C. 122(b) and certify that the invention disclosed in the attached application **has not and will not** be the subject of an application filed in another country, or under a multilateral international agreement, that requires publication at eighteen months after filing.

Representative Information:

Representative information should be provided for all practitioners having a power of attorney in the application. Providing this information in the Application Data Sheet does not constitute a power of attorney in the application (see 37 CFR 1.32).
Enter either Customer Number or complete the Representative Name section below. If both sections are completed the Customer Number will be used for the Representative Information during processing.

Please Select One:	◉ Customer Number	◯ US Patent Practitioner	◯ Limited Recognition (37 CFR 11.9)
Customer Number	24504		

Domestic Benefit/National Stage Information:

This section allows for the applicant to either claim benefit under 35 U.S.C. 119(e), 120, 121, or 365(c) or indicate National Stage entry from a PCT application. Providing this information in the application data sheet constitutes the specific reference required by 35 U.S.C. 119(e) or 120, and 37 CFR 1.78(a)(2) or CFR 1.78(a)(4), and need not otherwise be made part of the specification.

Prior Application Status	Pending		Remove
Application Number	Continuity Type	Prior Application Number	Filing Date (YYYY-MM-DD)
	Continuation of	10958797	2004-10-05
Prior Application Status	Patented		Remove

Under the Paperwork Reduction Act of 1995, no persons are required to respond to a collection of information unless it contains a valid OMB control number.

Application Data Sheet 37 CFR 1.76	Attorney Docket Number	171901-1032
	Application Number	
Title of Invention	Toilet Fill Valve with Adjustable Bowl Fill Flow	

Application Number	Continuity Type	Prior Application Number	Filing Date (YYYY-MM-DD)	Patent Number	Issue Date (YYYY-MM-DD)
10958797	Continuation in part of	10798606	2004-03-11	6823889	2004-11-30

Additional Domestic Benefit/National Stage Data may be generated within this form by selecting the **Add** button. Add

Foreign Priority Information:

This section allows for the applicant to claim benefit of foreign priority and to identify any prior foreign application for which priority is not claimed. Providing this information in the application data sheet constitutes the claim for priority as required by 35 U.S.C. 119(b) and 37 CFR 1.55(a).

Remove

Application Number	Country [i]	Parent Filing Date (YYYY-MM-DD)	Priority Claimed
			○ Yes ◉ No

Additional Foreign Priority Data may be generated within this form by selecting the **Add** button. Add

Assignee Information:

Providing this information in the application data sheet does not substitute for compliance with any requirement of part 3 of Title 37 of the CFR to have an assignment recorded in the Office.

Assignee 1 Remove

If the Assignee is an Organization check here. ☒

Organization Name	MJSI, Inc.		
Mailing Address Information:			
Address 1	205 Earl Rd		
Address 2			
City	Shorewood	**State/Province**	IL
Country [i]	US	Postal Code	60404
Phone Number		Fax Number	
Email Address			

Additional Assignee Data may be generated within this form by selecting the **Add** button. Add

Signature:

A signature of the applicant or representative is required in accordance with 37 CFR 1.33 and 10.18. Please see 37 CFR 1.4(d) for the form of the signature.

Signature	/Michael J. D'Aurelio/			Date (YYYY-MM-DD)	2010-05-25
First Name	Michael J.	Last Name	D'Aurelio	Registration Number	40977

Under the Paperwork Reduction Act of 1995, no persons are required to respond to a collection of information unless it contains a valid OMB control number.

Application Data Sheet 37 CFR 1.76	Attorney Docket Number	171901-1032
	Application Number	
Title of Invention	Toilet Fill Valve with Adjustable Bowl Fill Flow	

This collection of information is required by 37 CFR 1.76. The information is required to obtain or retain a benefit by the public which is to file (and by the USPTO to process) an application. Confidentiality is governed by 35 U.S.C. 122 and 37 CFR 1.14. This collection is estimated to take 23 minutes to complete, including gathering, preparing, and submitting the completed application data sheet form to the USPTO. Time will vary depending upon the individual case. Any comments on the amount of time you require to complete this form and/or suggestions for reducing this burden, should be sent to the Chief Information Officer, U.S. Patent and Trademark Office, U.S. Department of Commerce, P.O. Box 1450, Alexandria, VA 22313-1450. DO NOT SEND FEES OR COMPLETED FORMS TO THIS ADDRESS. **SEND TO: Commissioner for Patents, P.O. Box 1450, Alexandria, VA 22313-1450.**

Privacy Act Statement

The Privacy Act of 1974 (P.L. 93-579) requires that you be given certain information in connection with your submission of the attached form related to a patent application or patent. Accordingly, pursuant to the requirements of the Act, please be advised that: (1) the general authority for the collection of this information is 35 U.S.C. 2(b)(2); (2) furnishing of the information solicited is voluntary; and (3) the principal purpose for which the information is used by the U.S. Patent and Trademark Office is to process and/or examine your submission related to a patent application or patent. If you do not furnish the requested information, the U.S. Patent and Trademark Office may not be able to process and/or examine your submission, which may result in termination of proceedings or abandonment of the application or expiration of the patent.

The information provided by you in this form will be subject to the following routine uses:

1. The information on this form will be treated confidentially to the extent allowed under the Freedom of Information Act (5 U.S.C. 552) and the Privacy Act (5 U.S.C. 552a). Records from this system of records may be disclosed to the Department of Justice to determine whether the Freedom of Information Act requires disclosure of these records.

2. A record from this system of records may be disclosed, as a routine use, in the course of presenting evidence to a court, magistrate, or administrative tribunal, including disclosures to opposing counsel in the course of settlement negotiations.

3. A record in this system of records may be disclosed, as a routine use, to a Member of Congress submitting a request involving an individual, to whom the record pertains, when the individual has requested assistance from the Member with respect to the subject matter of the record.

4. A record in this system of records may be disclosed, as a routine use, to a contractor of the Agency having need for the information in order to perform a contract. Recipients of information shall be required to comply with the requirements of the Privacy Act of 1974, as amended, pursuant to 5 U.S.C. 552a(m).

5. A record related to an International Application filed under the Patent Cooperation Treaty in this system of records may be disclosed, as a routine use, to the International Bureau of the World Intellectual Property Organization, pursuant to the Patent Cooperation Treaty.

6. A record in this system of records may be disclosed, as a routine use, to another federal agency for purposes of National Security review (35 U.S.C. 181) and for review pursuant to the Atomic Energy Act (42 U.S.C. 218(c)).

7. A record from this system of records may be disclosed, as a routine use, to the Administrator, General Services, or his/her designee, during an inspection of records conducted by GSA as part of that agency's responsibility to recommend improvements in records management practices and programs, under authority of 44 U.S.C. 2904 and 2906. Such disclosure shall be made in accordance with the GSA regulations governing inspection of records for this purpose, and any other relevant (i.e., GSA or Commerce) directive. Such disclosure shall not be used to make determinations about individuals.

8. A record from this system of records may be disclosed, as a routine use, to the public after either publication of the application pursuant to 35 U.S.C. 122(b) or issuance of a patent pursuant to 35 U.S.C. 151. Further, a record may be disclosed, subject to the limitations of 37 CFR 1.14, as a routine use, to the public if the record was filed in an application which became abandoned or in which the proceedings were terminated and which application is referenced by either a published application, an application open to public inspections or an issued patent.

9. A record from this system of records may be disclosed, as a routine use, to a Federal, State, or local law enforcement agency, if the USPTO becomes aware of a violation or potential violation of law or regulation.

Docket No. 171901-1032

TO ALL WHOM IT MAY CONCERN:

Be it known that we, Michael J. Schuster, residing at 612 Nicholson Street, Joliet, Illinois 60435, a citizen of the United States, and Larry Schneider residing at 39155 N. Pine Grove Ave., Wadsworth, Illinois 60083, a citizen of the United States, have invented the invention described in the following Patent Application entitled

TOILET FILL VALVE WITH ADJUSTABLE BOWL FILL FLOW.

TOILET FILL VALVE WITH ADJUSTABLE BOWL FILL FLOW

CROSS REFERENCE TO RELATED APPLICATIONS

[0001] The present patent application is a Continuation-in-Part Application claiming priority to U.S. Patent Application entitled "Toilet Fill Valve with Adjustable Bowl Fill Flow" filed on March 11, 2004 and assigned Serial Number 10/798,606.

BACKGROUND

[0002] A toilet fill valve in a toilet typically includes a water outlet that provides water for refilling a toilet bowl during a flush cycle. Unfortunately, the water flowing out of such conventional water outlets to fill a toilet bowl provide much more water than is necessary to fill the average toilet bowl. Consequently, much of the water that flows into a toilet bowl during the average flush cycle is lost down the drain. This translates into a loss of millions of gallons of water each year.

BRIEF DESCRIPTION OF THE SEVERAL VIEWS OF THE DRAWINGS

[0003] The invention can be understood with reference to the following drawings. The components in the drawings are not necessarily to scale. Also, in the drawings, like reference numerals designate corresponding parts throughout the several views.

[0004] FIG. 1 is a drawing of a side view of a toilet fill valve according to an embodiment of the present invention;

[0005] FIG. 2 is a drawing of a top view of the toilet fill valve of FIG. 1;

[0006] FIG. 3 is a drawing of a cutaway view of a toilet tank within which the toilet fill valve of FIG. 1 is installed;

[0007] FIG. 4 is a drawing of a side view of a toilet fill valve according to an embodiment of the present invention;

[0008] FIGS. 5A and 5B are drawings that illustrate one example of a coupling of a bowl fill valve to the toilet fill valve of FIG. 4 according to an embodiment of the present invention;

[0009] FIGS. 6A, 6B, and 6C are drawings that illustrate another example of a coupling of a bowl fill valve to the toilet fill valve of FIG. 4 according to an embodiment of the present invention;

[0010] FIG. 7 is a drawing that illustrates still another example of a coupling of a bowl fill valve to the toilet fill valve of FIG. 4 according to an embodiment of the present invention;

[0011] FIGS. 8A and 8B are drawings that illustrate an example of a bowl fill valve that is coupled to the toilet fill valve of FIG. 4 according to an embodiment of the present invention; and

[0012] FIGS. 9A and 9B are drawings that illustrate another example of a bowl fill valve that is coupled to the toilet fill valve of FIG. 4 according to an embodiment of the present invention.

DETAILED DESCRIPTION

[0013] With reference to FIG. 1, shown is a toilet fill valve 100 according to an embodiment of the present invention. The toilet fill valve 100 includes a water inlet 103 at the bottom of the toilet fill valve 100 that is configured to be coupled to a water source outside of a toilet tank within which the toilet fill valve 100 is installed. The toilet fill valve 100 includes one or more water outlets 106 that are configured to supply water into a toilet tank within which the toilet fill valve 100 is installed. The toilet fill valve 100 may be, for example, a pilot style fill valve. However, it is understood that the toilet fill valve 100 may be any style of fill valve such as, for example, a ballcock valve, *etc*. The toilet fill valve 100 also includes a bowl fill valve 109 according to an embodiment of the present invention. The bowl fill valve 109 includes a bowl fill valve inlet 113 and a bowl fill valve outlet 116. In addition, the bowl fill valve 109 includes a handle 119 that facilitates a manual adjustment of the bowl fill valve 109.

[0014] The bowl fill valve 109 is integral with the toilet fill valve 100. In this respect, the term “integral” refers to the fact that the bowl fill valve 109 and the toilet fill valve 100 comprise a single structure. In this respect, the bowl fill valve 109 may be included within the body of the toilet fill valve 100 as a portion of the toilet fill valve 100 in a single piece construction. Specifically, the bowl fill valve 109 may be molded as a portion of the toilet fill valve 100 or it may be snapped or clamped into place, or it may be attached to the toilet fill valve 100 in some other manner, etc.

[0015] Within the toilet fill valve 100, the bowl fill valve inlet 113 is operatively coupled to the water inlet 103. In this respect, when the toilet fill valve 100 is open and water flows from the water inlet 103 to the water outlets 106 and into a toilet tank, an amount of water is also supplied to the bowl fill valve inlet 113 that flows through the bowl fill valve 109 and out the bowl fill valve outlet 116. By virtue of the manual setting of the handle 119 of the bowl fill valve 109, the flow of water through the bowl fill valve 109 is regulated. In this manner, the flow of water is regulated so that enough water flows out of the bowl fill valve 109 to fill a toilet bowl without wasting any water down a drain.

[0016] Thus, the bowl fill valve 109 is configured to supply an adjustable flow of water out of the bowl fill outlet 116 that is directed to a toilet bowl during a flush cycle of a toilet to fill the toilet bowl. The flow of water is adjusted so that just enough flows out of bowl fill valve 109 so as to fill the toilet bowl without wasting any water.

[0017] The toilet fill valve 100 includes a float 123 that is operatively coupled to an actuating arm (not shown) by a translating stem 126. The float 123 floats on the water within a toilet tank and, depending on the location of the float 123 along the toilet fill valve 100, the toilet fill valve 100 is open or closed as can be appreciated by those with ordinary skill in the art. The bowl fill valve 109 and the actuating arm (not shown) are each located on the toilet fill valve 100 so as to prevent any interference between the bowl fill valve 109 and the translational stem 126 or the actuating arm as will be discussed.

[0018] According to an embodiment of the present invention, the bowl fill valve 109 may include a number of biased positions. In this respect, the movement of the handle 119 may cause the bowl fill valve 109 to move from one predefined biased

position to other predefined biased positions. In this respect, various mechanisms such as tabs, snaps, or other position biasing structures may be employed. The biased positions of the bowl fill valve 109 help ensure that the bowl fill valve 109 remains in a given setting selected by a user by a manual manipulation of the handle 119 during the normal course of operation of the toilet fill valve 100. Thus, by virtue of the biased positions, the bowl fill valve 109 is prevented from moving out of a desired position set by a user over a long period of use due to vibration and other factors as can be appreciated by those with ordinary skill in the art.

[0019] The bowl fill valve 109 may be, for example, a ball valve, a gate valve, a globe valve, a plug valve, a diaphragm valve, a butterfly valve, a needle valve, a sliding gate, a quick turn valve, a knife valve or any other appropriate type of valve as can be appreciated by those with ordinary skill in the art.

[0020] To operate the toilet fill valve 100, the toilet fill valve 100 is first installed within a toilet tank. When a toilet is flushed and the tank is drained, the float 123 moves downward along the toilet fill valve 100 and, consequently, the toilet fill valve 100 opens to allow water to flow from the water inlet 103 and out the water outlets 106 into a toilet tank. At the same time, water flows into the bowl fill valve inlet 113 and out the bowl fill valve outlet 116 through the bowl fill valve 109. Based on the setting of the handle 119, the bowl fill valve 109 determines the precise flow rate of the water that flows out the bowl fill valve outlet 116. A tube is typically employed to direct the water flowing out the bowl fill valve outlet 116 to an overflow tube in the toilet tank. In this respect, the water flowing out the bowl fill valve outlet 116 refills the toilet bowl of the respective toilet.

[0021] Referring next to FIG. 2, shown is a top view of the toilet fill valve 100 according to an embodiment of the present invention. In this respect, the actuating arm 129 of the bowl fill valve 100 is seen with respect to the bowl fill valve 109. The actuating arm 129 is coupled to the float by way of the translational stem 126 (FIG. 1). In this respect, the actuating arm 129 extends in an orthogonal direction relative to a longitudinal axis 133 of the toilet fill valve 100. The longitudinal axis 133 is centered in the toilet fill valve 100 along the length of the toilet fill valve 100. Also, the bowl fill valve 109 extends in an orthogonal direction relative to the longitudinal axis 133 of the

toilet fill valve 100. In order to prevent interference between the bowl fill valve 109 and the translational stem 126 or the actuating arm 129, the actuating arm 129 is angularly offset relative to the bowl fill valve 109 as shown. In this respect, the translational stem 126 is coupled to the free end of the actuating arm 129. By virtue of the angular offset between the bowl fill valve 109 and the actuating arm 129, the operation of the bowl fill valve 109 does not interfere with the operation of the toilet fill valve 100 itself by virtue of the fact that the float 123 (FIG. 1) can move freely with the movement of the translational stem 126 in order for proper operation of the toilet fill valve 100.

[0022] With reference to FIG. 3, shown is the toilet fill valve 100 as installed within a toilet tank 143 according to an embodiment of the present invention. In this respect, the toilet fill valve 100 includes the water inlet 103 that is coupled to a water source outside of the toilet tank 143. The toilet fill valve 100 also includes one or more water outlets 106 that direct a flow of water into the toilet tank 143 during the operation of a flush cycle. The bowl fill valve 109 includes the bowl fill valve inlet (not shown) and the bowl fill valve outlet 116, where the bowl fill valve inlet is operatively coupled to the water inlet 103 as described above. Also, the bowl fill valve 109 is integrated with the body of the toilet fill valve 100 as described above.

[0023] A tube 146 is coupled to the bowl fill valve outlet 116 and is directed into the overflow tube 149 of the toilet tank 143. The tube 146 directs water that flows out of the bowl fill valve outlet 116 into the overflow tube 149 and refills the toilet bowl associated with the toilet tank 143 as can be appreciated by those with ordinary skill in the art. The bowl fill valve 109 is configured to supply the adjustable flow of water out the bowl fill valve outlet through the tube 146 and into the overflow tube 149 for filling the toilet bowl during the flush cycle of the toilet. In this respect, no pressure is seen within the tube 146. Specifically, the fact that the bowl fill valve 109 is integral with the toilet fill valve 100 prevents the creation of a pressure head in the tube 146 as would be the case if the bowl fill valve 109 were included in the middle of the tube 146. The fact that a pressure head is not created in any portion of the tube 146 prevents the tube 146 from working its way off of the bowl fill valve outlet 116 over time.

[0024] When installed, the bowl fill valve 109 is calibrated for the particular flush cycle of the toilet within which the toilet fill valve 100 is installed. To calibrate the bowl

fill valve 109, a user first determines the water level in the toilet bowl when the toilet bowl is full of water. This gives the user a starting and an ending point for determining when the toilet bowl of the respective toilet is full. Next, the bowl fill valve handle 109 is adjusted so that the bowl fill valve 109 is placed in a predefined position that allows a predefined flow of water to refill the toilet bowl. In this manner, one adjusts the actual flow of water that refills the toilet bowl. Thereafter, the user flushes the toilet itself. Next, the user determines if the flow of water into the toilet bowl by virtue of the adjustments made to the bowl fill valve 109 is adequate to refill the toilet bowl during the flush cycle. This may be determined, by identifying whether the level of the water in the toilet bowl reaches the full level determined at the beginning of the bowl fill valve calibration above.

[0025] The flow of water from the bowl fill valve 109 should be set so as to ensure that the water level in the toilet bowl reaches the full level at about the same time that the flush cycle ends. In other words, the level of water in the toilet bowl should reach its highest level at the same time that the flush cycle ends. This prevents any water from being lost down the drain associated with the toilet.

[0026] If the amount of water that flows into the toilet bowl is inadequate to refill the toilet bowl during the flush cycle as described above, then one should repeat the steps of adjusting the bowl fill valve, flushing the toilet, and then once again determining if the flow of water into the toilet bowl is adequate to refill the toilet bowl during a flush cycle.

[0027] Ultimately, during use of the toilet that includes the toilet fill valve 100 and the toilet tank 143, a user flushes the toilet and a predetermined flow of water exits the bowl fill valve outlet 116 and is directed into the toilet bowl. After the toilet tank has drained during the flush cycle, a flapper closes in the toilet tank and the toilet tank refills. During the refilling of the tank, the water supplied by the bowl fill valve 109 fills the toilet bowl itself. The amount of water supplied by the bowl fill valve in the time it takes to refill the toilet tank should be approximately equal to the amount of water needed to fill the toilet bowl. By virtue of the fact that the bowl fill valve 100 is integrated within the toilet fill valve 100, a pressure head is prevented from being

created due to any potential pinching of the tube 146 or other similar adjustment mechanism.

[0028] With reference to FIG. 4, shown is a toilet fill valve 200 according to another embodiment of the present invention. The toilet fill valve 200 includes the same water inlet 103 and the water outlets 106 as the toilet fill valve 100 (FIG. 1). The toilet fill valve 200 also includes the float 123 and the translational stem 126 as was described with reference to the toilet fill valve 100. In addition, the toilet fill valve 200 includes a bowl fill valve 203 that is integral with the toilet fill valve 200 as will be described. As stated above, the term “integral” refers to the fact that the bowl fill valve 200 and the toilet fill valve 100 comprise a single structure. In this embodiment, the bowl fill valve 200 is a separate component that is attached the body of the toilet fill valve 100, thereby forming the integral, single structure.

[0029] The toilet fill valve 200 also includes a bowl fill outlet port 206 that radially extends from a portion of a body 209 of the toilet fill valve 200. In this respect, the bowl fill outlet port is operatively coupled to the water inlet 103. In particular, when the toilet fill valve 200 is in an “on” state, water that flows in the water inlet 103 flows out of both the water outlets 106 and the bowl fill outlet port 206. The water flowing out of the bowl fill outlet port 206 flows through the bowl fill valve 203 as will be described.

[0030] The bowl fill valve 203 includes a bowl fill valve inlet port 213 and a bowl fill valve outlet port 216. The bowl fill valve inlet port 213 is compatible with the bowl fill outlet port 206, where the bowl fill valve inlet port 213 is coupled to the bowl fill outlet port 206 when the bowl fill valve 203 is coupled or affixed to the toilet fill valve 200. The bowl fill valve inlet port 213 is compatible with the bowl fill outlet port 206 in the sense that both the bowl fill valve inlet port 213 and the bowl fill outlet port 206 comprise various structures that couple together when the bowl fill valve 203 is connected to the bowl fill outlet port 206 as will be described. In particular, various embodiments of the coupling between the bowl fill valve inlet port 213 and the bowl fill outlet port 206 are described herein.

[0031] The bowl fill valve 203 also includes a handle that may be adjusted by hand to adjust a flow of water through the bowl fill valve 203 during a flush operation of a toilet in which the toilet fill valve 200 is installed. Typically, the handle 219 is initially

adjusted to a desired position when the toilet fill valve 200 is installed and generally remains in such position for the continued operation of the toilet fill valve 200. During the life cycle of the bowl fill valve 203, it may be possible that the bowl fill valve 203 is adjusted to take into account various changes in the operation of the toilet fill valve 200 such as, for example, changes in pressure or other operational changes.

[0032] The bowl fill valve 203 also includes a nipple 223. The nipple 223 is adapted to mate with a tube that extends from the bowl fill valve outlet port 216 to the overfill tube 149 (FIG. 3) in a manner similar to that as shown in FIG. 3 with respect to the tube 146 (FIG. 3) that extends from the nipple 116 (FIG. 3) to the overflow tube 149 (FIG. 3). The bowl fill valve 203 extends beyond the bowl fill outlet port 206 in a radial direction with respect to the portion of the body 209 of the toilet fill valve 200.

[0033] In some embodiments, the bowl fill outlet port 206 may comprise a female receptacle and, correspondingly, the bowl fill valve inlet port 213 may comprise a male end compatible with the female receptacle. Alternatively, the bowl fill valve inlet port 213 may comprise a female receptacle and the bowl fill outlet port 206 may comprise a male end compatible with such female receptacle.

[0034] The toilet fill valve 200 further includes an actuating arm (not shown) that extends in a radial direction that is orthogonal relative to a longitudinal axis of the toilet fill valve 200 in a manner similar as that described with reference to the toilet fill valve 100 (FIG. 1). The longitudinal axis is defined as an axis that runs from the water inlet 103 through the body 209 of the toilet fill valve 200 and out the top of the toilet fill valve 200. In one embodiment, the bowl fill valve 203 extends radially in an orthogonal direction relative to such longitudinal axis of the toilet fill valve 200. Also, in one embodiment, the actuating arm is angularly offset relative to the bowl fill valve 203 to prevent interference between the bowl fill valve 203 and the translational stem 126 that extends from the float 123 to a free end of the actuating arm. This allows the float 123 to move up and down and to engage the actuating arm during the normal operation of the toilet fill valve 200 during various flush cycles.

[0035] In addition, the bowl fill valve 203 may be constructed with a number of biased positions that help prevent the bowl fill valve 203 from moving out of adjustment over time when the force of pressure develops therein. Also, the biased

positions aid a user in actual adjustment of the bowl fill valve 203 as can be appreciated.

[0036] The toilet fill valve 200 provides an advantage in that the body 209 of the toilet fill valve 200 may be constructed with the bowl fill outlet port 206 using a molding process that is much less complex than attempting to mold the entire bowl fill valve 203 within the structure of the body 209 as a single molded construction as was described with reference to one embodiment of the toilet fill valve 100. In this regard, the bowl fill valve 203 may be constructed as a separate component to the body 209 of the toilet fill valve 200 and assembled for distribution to end users.

[0037] Due to the fact that the bowl fill valve 203 is affixed to the toilet fill valve 200 through the coupling of the bowl fill outlet port 206 with the bowl fill valve inlet port 213, then a pressure head that develops within the bowl fill valve 203 due to the adjustment of the handle 219 during operation of the toilet fill valve 200 will not cause the bowl fill valve 203 to fall off of the toilet fill valve 200. Thus, when the toilet fill valve 200 is installed in a toilet tank 143, a user may adjust the opening of the bowl fill valve 203 by adjusting the handle 219 until a desired flow of water flows out of the bowl fill valve outlet port 216 into a tube and into the overflow tube 149 of a toilet. This flow of water is typically established to refill a toilet bowl of a toilet. In this regard, the flow of the water into the overflow tube 149 that refills the toilet bowl during a toilet flush operation may be regulated or adjusted so as to minimize or eliminate the amount of water that is lost down the drain of a toilet due to over filling of the toilet bowl during a flush cycle of a toilet. In one embodiment, the bowl fill valve 203 is adjusted until the filling of the toilet bowl of the toilet coincides with the end of the flush cycle, thereby resulting in little or no loss of water.

[0038] Referring next to FIG. 5A, shown is a coupling 233 between one embodiment of the bowl fill outlet port 206, denoted herein as bowl fill outlet port 206a, and an embodiment of the bowl fill valve inlet port 213, denote herein as bowl fill valve inlet port 213a. The bowl fill valve inlet port 213a includes a slot 236 in a side wall 239. The bowl fill outlet port 206a comprises a rib (not shown) that extends from a side wall 243 that is inserted into the slot 236 when the bowl fill inlet port 213a is inserted into the bowl fill outlet port 206a. The mating of the slot 236 with the rib

prevents the rotation of the bowl fill valve 213a with respect to the bowl fill outlet port 206a when the bowl fill valve inlet port 213a is inserted into the bowl fill outlet port 206a. Alternatively, there may be a number of slots 236 in the side wall 239 of the bowl fill valve inlet port 213a and a corresponding number of ribs extending from the side wall 243 of the bowl fill outlet port 206a.

[0039] The bowl fill valve inlet port 213a also includes an annular protrusion 246 that extends from the side wall 239 of the bowl fill valve inlet port 213a. Correspondingly, an annular groove (not shown) in the side wall 243 of the bowl fill valve outlet port 206a is provided that mates up with the annular protrusion 246 when the bowl fill valve inlet port 213 is inserted into the bowl fill outlet port 206a. In this respect, the annular protrusion 246 is snap fit into the annular groove (not shown), thereby affixing the bowl fill valve 203a to the bowl fill valve outlet port 206a.

[0040] Turning then to FIG. 5B, shown is a cutaway view of the coupling 233 between the bowl fill outlet port 206a and the bowl fill valve inlet port 213a according to an embodiment of the present invention. In this respect, the bowl fill outlet port 206a is depicted with two ribs 249 extending from the side wall 243 within the bowl fill outlet port 206a. Also, the bowl fill outlet port 206a includes the annular groove 253 into which the annular protrusion 246 snaps when the bowl fill valve inlet port 213a is inserted into the bowl fill outlet port 206a. In this respect, the mating of the annular protrusion 246 with the annular groove 253 fixes the bowl fill valve 203 to the bowl fill outlet port 206a. In this respect, the bowl fill valve 203 becomes an integral portion of the toilet fill valve 200.

[0041] Also, the fit between the annular protrusion 246 is a snug fit that forms a seal between the bowl fill outlet port 206a and the bowl fill valve inlet port 213a that prevents the leakage of water from the coupling 233 during a flush cycle. Alternatively, a snug fit may occur between other mating surfaces of the bowl fill outlet port 206a and the bowl fill valve inlet port 213a that prevents leakage of water from the coupling 233.

[0042] With reference to FIGS. 5A and 5B, even though the slots 236 are depicted as being formed within the side wall 239 of the bowl fill valve inlet port 213 and the ribs 249 extend from the side wall 243 within the bowl fill outlet port 206, it is

possible that this arrangement may be reversed where the slots 236 are formed in the side wall 243 of the bowl fill outlet port 206a and the ribs 249 extend from the side wall 239 of the bowl fill valve inlet port 213a. In addition, the annular groove 253 may be created in the side wall 239 of the bowl fill valve inlet port 213 and the annular projection 246 may extend inward from the side wall 243 within the bowl fill outlet port 206 in a reverse arrangement than that shown with reference to FIG. 5B.

[0043] Referring next to FIG. 6A, 6B, and 6C, shown is a coupling 263 between another embodiment of the bowl fill outlet port 206, denoted herein as bowl fill outlet port 206b, and another embodiment of the bowl fill valve inlet port 213, denoted herein as bowl fill valve inlet port 213b. The bowl fill valve inlet port 213b includes at least two locking ears 266 that mate with corresponding locking grooves 269 in the bowl fill outlet port 206b. In particular, the locking ears 266 extend from a side wall 271 of the bowl fill valve inlet port 213b. The locking grooves 269 are disposed in the side wall 273 of the bowl fill outlet port 206b. When the bowl fill valve 203 is inserted and twisted into the bowl fill outlet port 206b, each of the locking ears 266 is situated in a locking position of one of the locking grooves 269 as will be described. The coupling 263 further comprises a sealing ring 276 that may be, for example, a rubber O-ring or other type of sealing ring. The sealing ring 276 is compressed between an end of the bowl fill valve inlet port 213b and a seat within the bowl fill outlet port 206b as we described. While at least two locking ears 266 and corresponding locking grooves 269 are shown, it is possible that a design may be employed that comprises a single locking ear 266 and a single corresponding locking groove 269.

[0044] With reference to FIG. 6B, shown is a portion of the bowl fill valve inlet port 213b and the bowl fill outlet port 206b as the bowl fill valve inlet port 213b is inserted into the bowl fill outlet port 206b and is partially rotated such that the locking ears 266 are almost located in the locking positions 279. In this respect, each of the locking grooves 269 is a “J” formation. The J formation of the locking grooves 269 allows the locking ears 266 to slide down and around the partial loop of the J and seat in the locking position 279 such that the sealing ring 276 exerts a force against the end of the bowl fill valve inlet port 213b, thereby pushing the locking ears 266 into the locking positions 279 of the locking grooves 269 and holding the locking ears 266 in

place. This ensures that the bowl fill valve 203 remains coupled to the bowl fill outlet port 206b.

[0045] With reference to FIG. 6C, shown is a cutaway view of the coupling 263 between the bowl fill outlet port 206b and the bowl fill valve inlet port 213b. In this respect, the bowl fill valve inlet port 213b is inserted into the bowl fill outlet port 206b in a manner such that the locking ears 266 mate with the locking grooves 269. When the locking ears 266 reach the bottom of the "J" of the locking grooves 269, then the bowl fill valve 203 is rotated so that the locking ears 266 may be seated in the locking positions 279.

[0046] The sealing ring 276 is seated against a portion of the bowl fill outlet port 206b. In one embodiment, this portion is a seating face 283 of the bowl fill outlet port 206b. Also, a portion of the bowl fill valve inlet port 213b is mated against the sealing ring 276. In one embodiment, this portion of the bowl fill valve inlet port 213b is an end face 286 such that the sealing ring is clamped between the seating face 283 and the end face 286 when the bowl fill valve inlet port 213b is inserted fully into the bowl fill outlet port 206b. The clamping or compression of the sealing ring 276 pushes the locking ears 266 into the locking position 279 of the locking grooves 269 once the bowl fill valve 203 is rotated accordingly. In this respect, the compressive force of the sealing ring 276 helps keep the bowl fill valve inlet port 213b of the bowl fill valve 203 mated with the bowl fill outlet port 206b. Also, the sealing ring 276 forms a seal between the bowl fill outlet port 206b and the bowl fill valve inlet port 213b that prevents leakage of water from the coupling 263 between the bowl fill outlet port 206b and the bowl fill valve inlet port 213b.

[0047] The locking positions 279 of the locking grooves and the locking ears 266 are located such that when the bowl fill valve 203 is rotated thereby positioning the locking ears 266 in the locking positions 279, the bowl fill valve 203 is substantially upright. In addition, the bowl fill outlet port 206b includes structural ribs 289 that provide greater structural stability for the bowl fill outlet port 206b and its attachment to the portion of the body 209 of the toilet fill valve 200 (FIG. 4). Alternatively, the bowl fill outlet port 206b may be attached without the structural ribs 289. In addition, it may be the case that the locking ears 266 extend inward from the side wall 273 of the bowl fill

outlet port 206b and that the locking grooves 269 be situated within the side wall 271 of the bowl fill valve inlet port 213b.

[0048] Referring next to FIG. 7, shown is a cutaway view of a coupling 303 between a third embodiment of the bowl fill outlet port 206, denoted herein as bowl fill outlet port 206c and the bowl fill valve inlet port 213 denoted herein as bowl fill valve inlet port 213c. In this respect, the bowl fill outlet port 206c includes a first thread 306 disposed on a side wall 309 of the bowl fill outlet port 206c. A second thread 313 is disposed on a side wall of the bowl fill valve inlet port 213c that engages the first thread 306 disposed in the side wall of the bowl fill outlet port 206c. The bowl fill valve inlet port 213c is coupled to the bowl fill outlet port 206c by way of the first and second threads 306 and 313. Specifically, the bowl fill valve 203 may be screwed onto the bowl fill outlet port 206c by virtue of the threads 306 and 313. When the bowl fill valve inlet port 213c is screwed into the bowl fill valve outlet port 206c, a sealing ring is clamped between portions of the bowl fill valve inlet port 213c and the bowl fill outlet port 206c such as a seating face 319 of the bowl fill outlet port 206c and an end face 323 of the bowl fill valve inlet port 213c. In this respect, a seal is formed between the bowl fill outlet port 206c and the bowl fill valve inlet port 213c. Alternatively, the threads 306 and 313 may be specified so as to form an adequate seal between the bowl fill valve outlet port 206c and the bowl fill valve inlet port 213c for purposes of preventing leakage. As an additional alternative, the seating face 319 and the end face 323 or other portions of the bowl fill valve inlet port 213c and the bowl fill outlet port 206c may be compressed together to form a seal to prevent leakage. Alternatively, the bowl fill outlet port 206c and the bowl fill valve inlet port 213c may be designed to include mating surfaces that perform a friction seal as can be appreciated.

[0049] Referring next to FIG. 8a, shown is one embodiment of the bowl fill valve 203, denoted herein as bowl fill valve 203a according to an embodiment of the present invention. The bowl fill valve 203a includes a handle 219a and a valve body 333. The bowl fill valve 203a includes the bowl fill valve outlet port 216a and the bowl fill valve inlet port (not shown) the bowl fill outlet port 216a includes a nipple 223a.

[0050] Referring then to FIG. 8b, shown is a cutaway view of the bowl fill valve 203a according to an embodiment of the present invention. In this respect, the valve

body 333 forms a cavity within which a valve 336 is inserted as shown. A line contact 339 is formed between surfaces of the valve body 333 and the valve 336 so as to both hold the valve 336 within the cavity that is formed by the valve body 333 and to form a seal between the valve body 333 and the valve 336 to prevent water leakage. As seen, the valve 336 is integrated with the handle 219a in a single piece construction, although multiple piece construction may be employed.

[0051] With reference to FIGS. 9a and 9b, shown is a second embodiment of the bowl fill valve 203, denoted herein as bowl fill valve 203b according to an embodiment of the present invention. The bowl fill valve 203b includes a valve body 343 within which is inserted a valve 346. The bowl fill valve 203b further comprises the bowl fill valve outlet port 216b and a bowl fill valve inlet port (not shown). The bowl fill valve outlet port 216b includes a nipple 223b. The bowl fill valve 203b further includes a handle 209b for manual adjustment of the bowl fill valve 203b.

[0052] Referring next to FIG. 9b, shown is a cutaway view of the bowl fill valve 203b according to an embodiment of the present invention. As shown, the valve 346 is inserted into the valve body 343. A snap fit 349 affixes the valve 346 within the valve body 343. A seal is formed by virtue of an interference fit 353 between a surface of the valve 346 and an inner surface of the valve body 343. The bottom of the cavity within the valve 346 is closed by a cap 356 that may be spin welded onto the valve 346 after the valve is inserted into the valve body 343.

[0053] In addition, referring back to FIG. 4, other types of couplings may be employed between the bowl fill outlet port 206 the bowl fill valve inlet port 213. For example, the bowl fill outlet port 206 the bowl fill valve inlet port 213 may be configured to facilitate a compression fitting there between. Also, other snap fit and sealing configurations may be employed beyond those specifically described herein.

[0054] Although the invention is shown and described with respect to certain embodiments, it is obvious that equivalents and modifications will occur to others skilled in the art upon the reading and understanding of the specification. The present invention includes all such equivalents and modifications, and is limited only by the scope of the claims.

CLAIMS

What is claimed is:

1. A toilet fill valve, comprising:

a water inlet;

a first water outlet configured to supply water to a toilet tank;

a bowl fill outlet port radially extending from a portion of a body of the toilet fill valve, the bowl fill outlet port being operatively coupled to the water inlet;

a bowl fill valve having a bowl fill valve inlet port and a bowl fill valve outlet port, wherein the bowl fill valve inlet port is compatible with the bowl fill outlet port and the bowl fill valve inlet port being coupled to the bowl fill outlet port; and

the bowl fill valve being configured to supply an adjustable flow of water out the bowl fill outlet port for filling a toilet bowl during a flush cycle of a toilet.

2. The toilet fill valve of claim 1, wherein bowl fill valve extends beyond the bowl fill outlet port in a radial direction with respect to a portion of the body of the toilet fill valve.

3. The toilet fill valve of claim 1, wherein:

the bowl fill outlet port further comprises a female receptacle; and

the bowl fill valve inlet port further comprises a male end compatible with the female receptacle.

4. The toilet fill valve of claim 1, wherein:

the bowl fill valve inlet port further comprises a female receptacle; and

the bowl fill outlet port further comprises a male end compatible with the female receptacle.

5. The toilet fill valve of claim 1, further comprising:

a float;

an actuating arm coupled to the float, the actuating arm radially extending in an orthogonal direction relative to a longitudinal axis of the toilet fill valve; and

the bowl fill valve extending in an orthogonal direction relative to the longitudinal axis of the toilet fill valve, wherein the actuating arm is angularly offset relative to the bowl fill valve, thereby preventing an interference with the bowl fill valve and a translational stem extending from the float to a free end of the actuating arm.

6. The toilet fill valve of claim 1, wherein the bowl fill valve outlet port further comprises a nipple adapted to mate with an end of a tube.

7. The toilet fill valve of claim 1, wherein the bowl fill valve further comprises a number of biased positions.

8. The toilet fill valve of claim 1, further comprising:

a rib extending from a side wall of the bowl fill outlet port; and

a slot in a side wall of the bowl fill valve inlet port, the rib being inserted into the slot, thereby preventing rotation of the bowl fill valve with respect to the bowl fill outlet port.

9. The toilet fill valve of claim 1, further comprising:

a rib extending from a side wall of the bowl fill valve inlet port; and

a slot in a side wall of the bowl fill outlet port, the rib being inserted into the slot, thereby preventing rotation of the bowl fill valve with respect to the bowl fill outlet port.

10. The toilet fill valve of claim 1, further comprising:

an annular protrusion extending from a side wall of the bowl fill valve inlet port; and

an annular groove in a side wall of the bowl fill outlet port, the annular protrusion being snap-fit into the annular groove, thereby affixing the bowl fill valve to the bowl fill outlet port.

11. The toilet fill valve of claim 1, further comprising:

an annular protrusion extending from a side wall of the bowl fill outlet port; and

an annular groove in a side wall of the bowl fill valve inlet port, the annular protrusion being snap-fit into the annular groove, thereby affixing the bowl fill valve to the bowl fill outlet port.

12. The toilet fill valve of claim 1, further comprising:

at least one locking ear extending from a side wall of the bowl fill valve inlet port; and

at least one locking groove in a side wall of the bowl fill outlet port, the at least one locking ear being situated in a locking position of the at least one locking groove.

13. The toilet fill valve of claim 12, further comprising a sealing ring clamped between a portion of the bowl fill valve inlet port and a portion of the bowl fill outlet port.

14. The toilet fill valve of claim 1, further comprising:

at least one locking ear extending from a side wall of the bowl fill outlet port; and

at least one locking groove in a side wall of the bowl fill valve inlet port, the at least one locking ear being situated in a locking position of the at least one locking groove.

15. The toilet fill valve of claim 14, further comprising a sealing ring clamped between a portion of the bowl fill valve inlet port and a portion of the bowl fill outlet port.

16. The toilet fill valve of claim 1, further comprising:

a first thread on a side wall of the bowl fill outlet port; and

a second thread on a side wall of the bowl fill valve inlet port, wherein the bowl fill valve inlet port is coupled to the bowl fill outlet port via the first and second threads.

17. The toilet fill valve of claim 16, further comprising a sealing ring clamped between a portion of the bowl fill valve inlet port and a portion of the bowl fill outlet port.

18. A toilet with a toilet tank having an adjustable bowl fill water flow, comprising:

a toilet fill valve in the toilet tank, the toilet valve having a water inlet coupled to a water source outside of the toilet tank and a water outlet directing a flow of water into the toilet tank;

a bowl fill outlet port radially extending from a portion of a body of the toilet fill valve, the bowl fill outlet port being operatively coupled to the water inlet;

a bowl fill valve having a bowl fill valve inlet port and a bowl fill valve outlet port, wherein the bowl fill valve inlet port is compatible with the bowl fill outlet port and the bowl fill valve inlet port being coupled to the bowl fill outlet port;

a tube having a first end attached to the bowl fill valve outlet port and a second end directed into an overflow tube in the toilet tank, wherein a flow of water into the overflow tube is directed to a toilet bowl of the toilet; and

the bowl fill valve being configured to supply an adjustable flow of water out the bowl fill valve outlet port through the tube and into the overflow tube for filling the toilet bowl during a flush cycle of a toilet.

19. A method for providing an adjustable bowl fill water flow in a toilet fill valve, comprising the steps of:

operatively coupling a bowl fill outlet port to a water inlet of the toilet fill valve;

radially extending the bowl fill outlet port from a portion of a body of the toilet fill valve; and

coupling a bowl fill valve inlet port of a bowl fill valve directly to the bowl fill outlet port, the bowl fill valve inlet port being compatible with the bowl fill outlet port, the bowl fill valve being configured to provide for the adjustable bowl fill water flow out a bowl fill valve outlet port of the bowl fill valve for filling a toilet bowl during a flush cycle of a toilet.

20. The method of claim 19, wherein the step of coupling of the bowl fill valve inlet port of the bowl fill valve directly to the bowl fill outlet port further comprises the step of mating a rib with a groove, thereby preventing rotation of the bowl fill valve with respect to the bowl fill outlet port.

21. The method of claim 19, wherein the step of coupling of the bowl fill valve inlet port of the bowl fill valve directly to the bowl fill outlet port further comprises the step of mating an annular protrusion with an annular groove, thereby affixing the bowl fill valve to the bowl fill outlet port.

22. The method of claim 19, wherein the step of coupling of the bowl fill valve inlet port of the bowl fill valve directly to the bowl fill outlet port further comprises the step of mating at least one locking ear with a corresponding at least one locking groove, respectively, the at least one locking ear being situated in a locking position of the at least one locking groove.

23. The method of claim 22, further comprising the step of clamping a sealing ring between a portion of the bowl fill valve inlet port and a portion of the bowl fill outlet port.

24. The method of claim 19, wherein the step of coupling of the bowl fill valve inlet port of the bowl fill valve directly to the bowl fill outlet port further comprises the step of mating a first thread associated with the bowl fill outlet port with a second thread associated with the bowl fill valve inlet port, wherein the bowl fill valve inlet port is coupled to the bowl fill outlet port via the first and second threads.

25. The method of claim 24, further comprising the step of clamping a sealing ring between a portion of the bowl fill valve inlet port and a portion of the bowl fill outlet port.

ABSTRACT OF THE DISCLOSURE

A toilet fill valve, toilet, and associated methods are provided with an adjustable bowl fill flow. In one embodiment, a toilet fill valve includes a water inlet and a first water outlet configured to supply water to a toilet tank. A bowl fill outlet port extends from a portion of a body of the toilet fill valve, the bowl fill outlet port being operatively coupled to the water inlet. The toilet fill valve includes a bowl fill valve having a bowl fill valve inlet port and a bowl fill valve outlet port, wherein the bowl fill valve inlet port is compatible with the bowl fill outlet port and the bowl fill valve inlet port being coupled to the bowl fill outlet port, the bowl fill valve radially extending from a portion of a body of the toilet fill valve. The bowl fill valve is configured to supply an adjustable flow of water out the bowl fill outlet port for filling a toilet bowl during a flush cycle of a toilet.

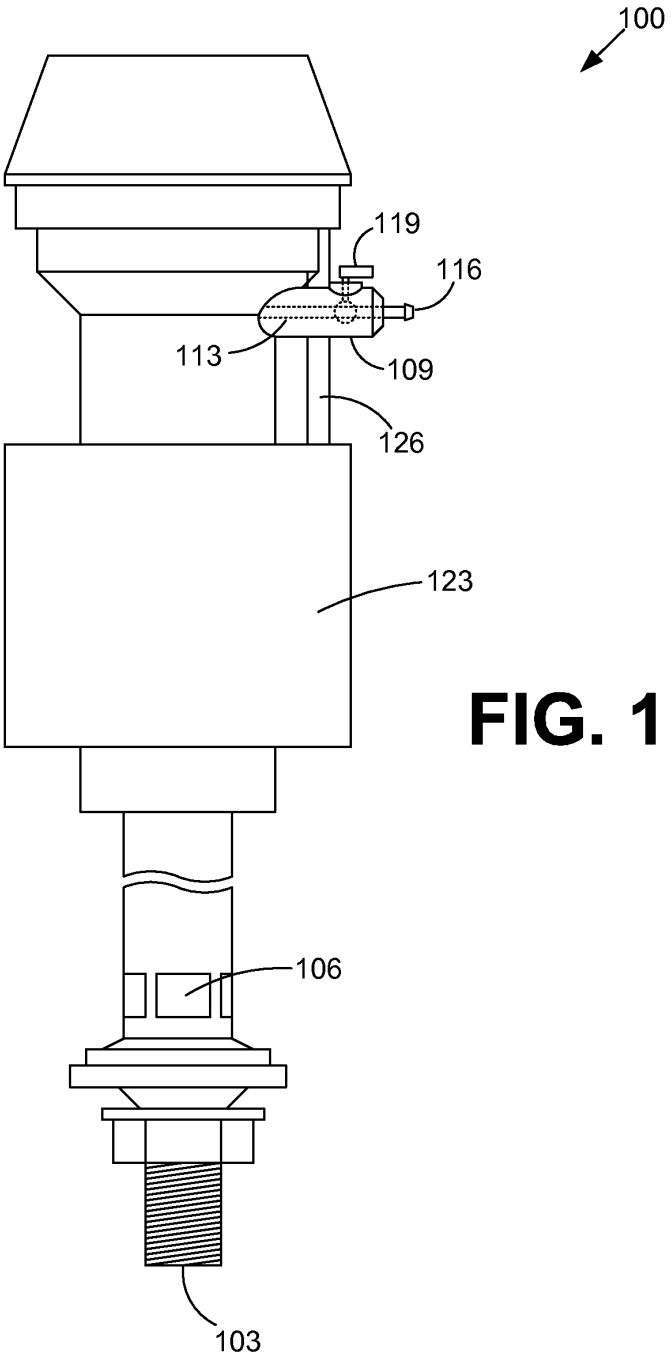

FIG. 1

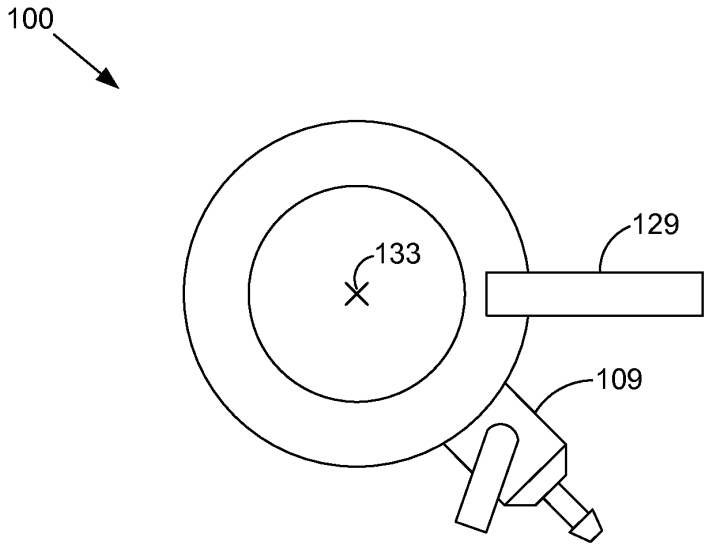

FIG. 2

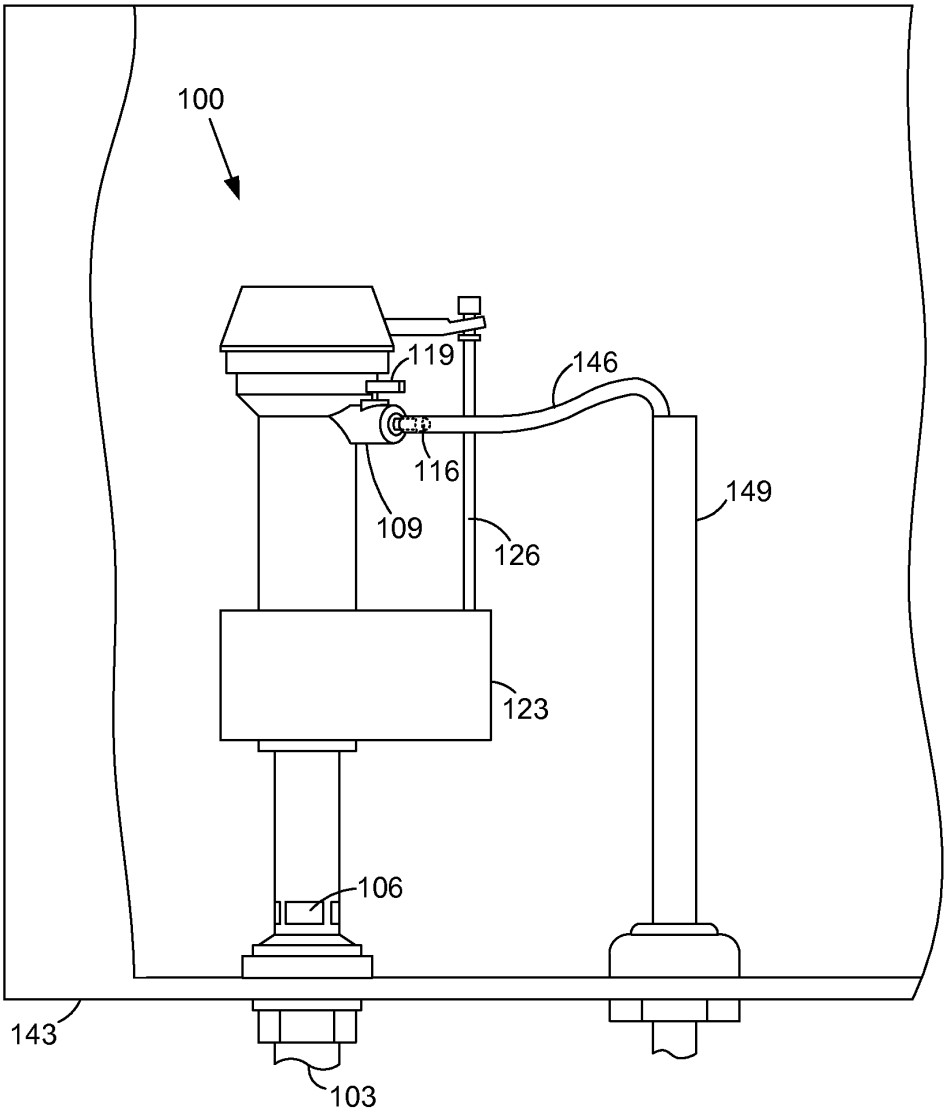

FIG. 3

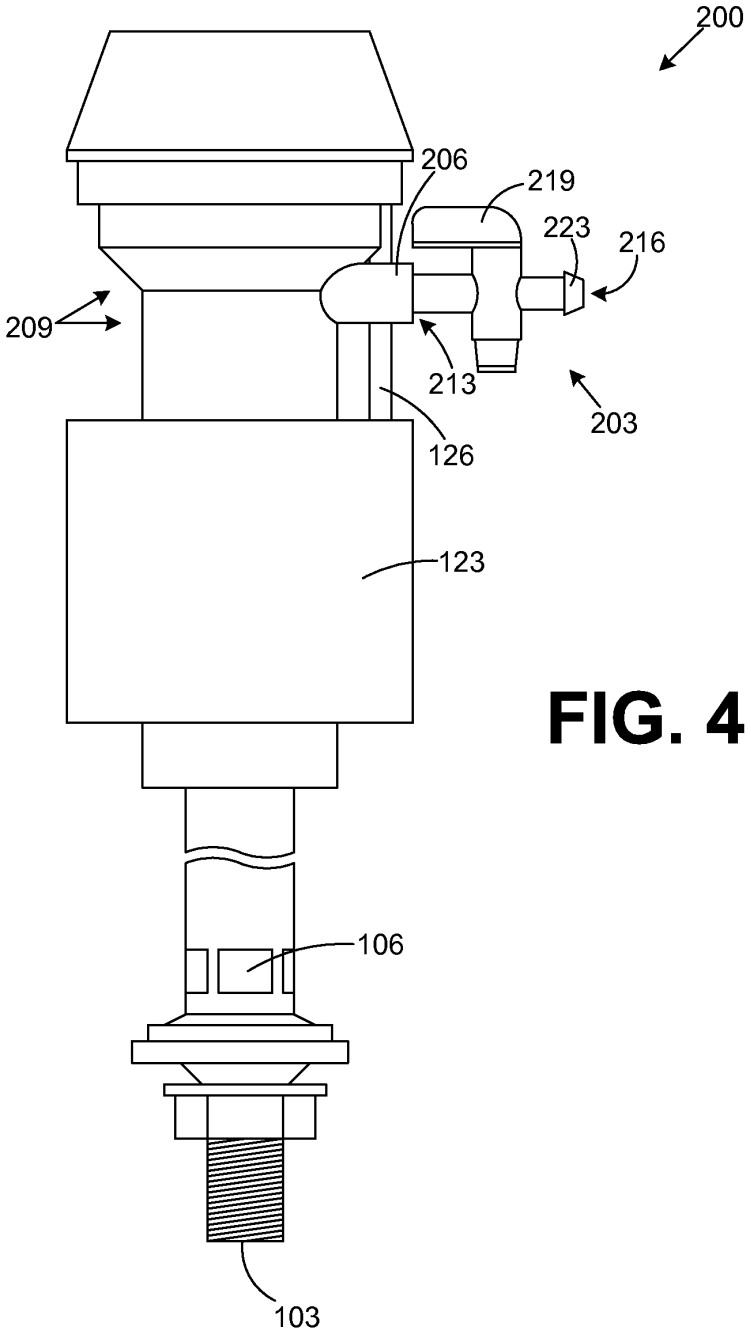

FIG. 4

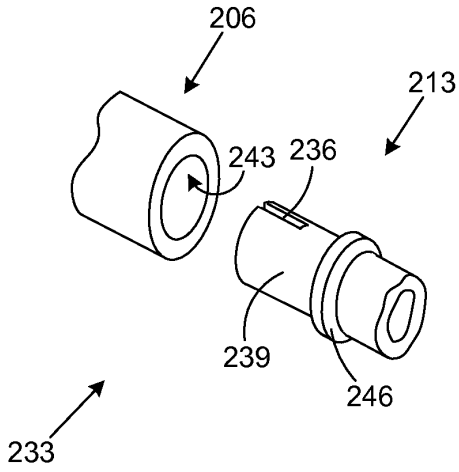

FIG. 5A

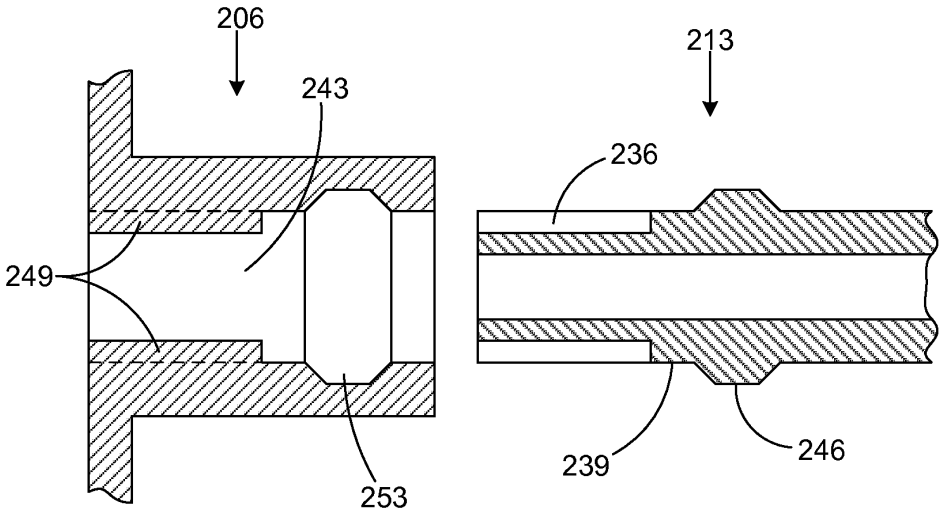

FIG. 5B

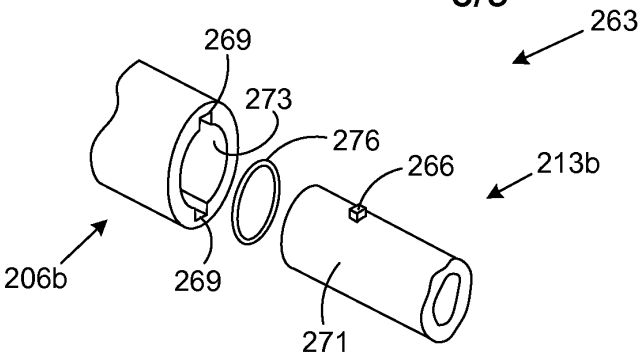

FIG. 6A

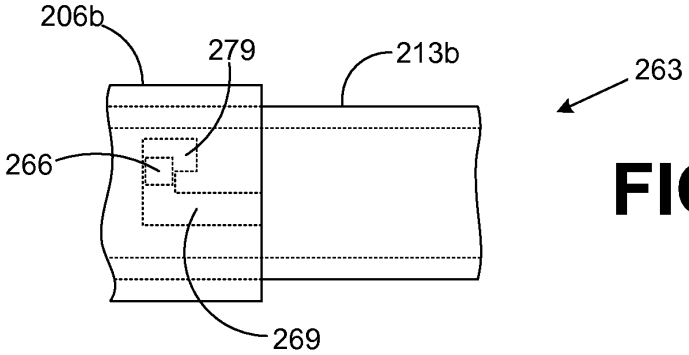

FIG. 6B

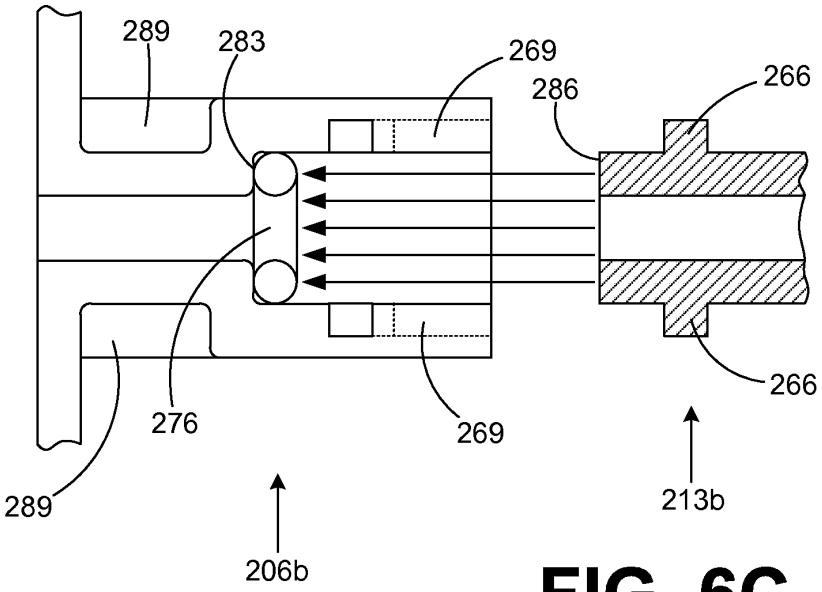

FIG. 6C

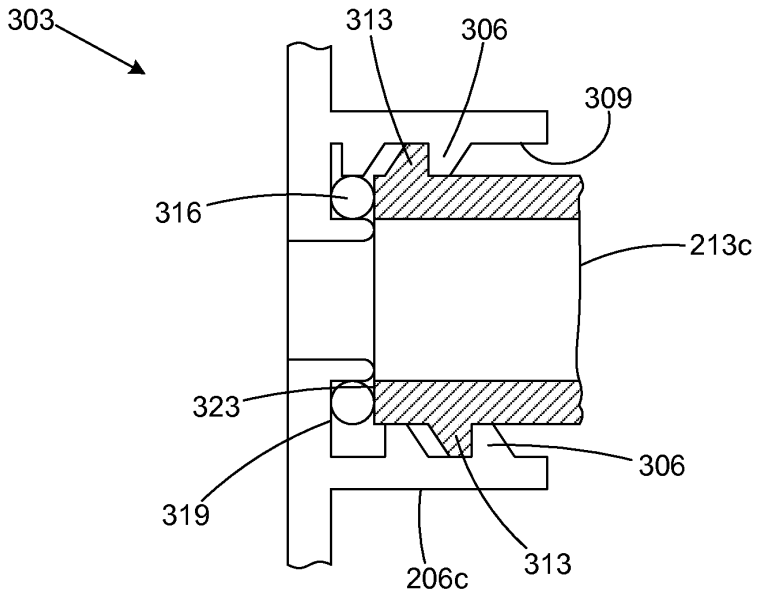

FIG. 7

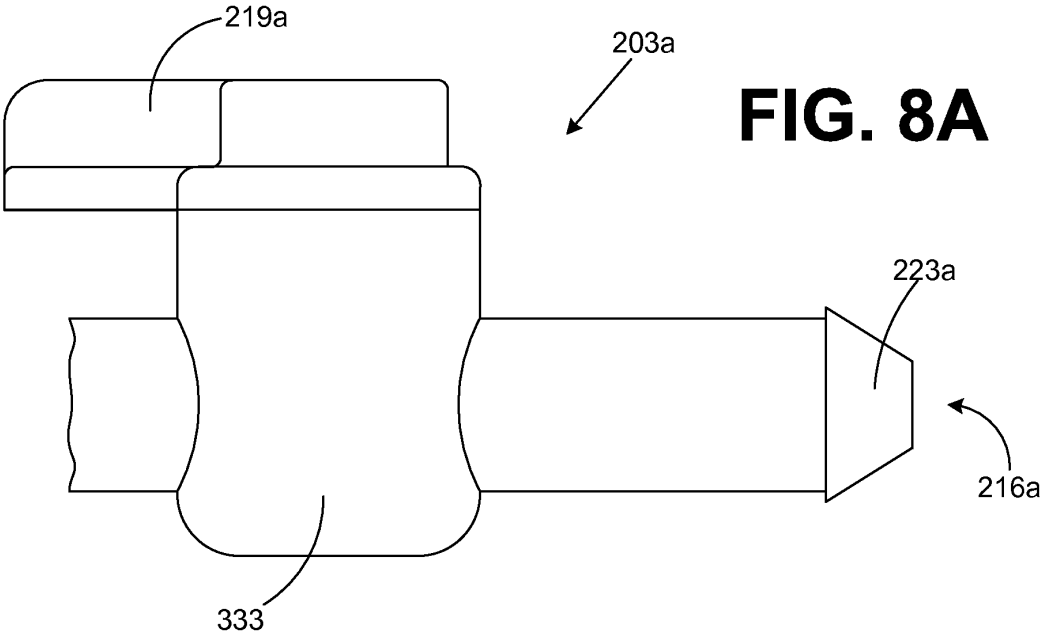

FIG. 8A

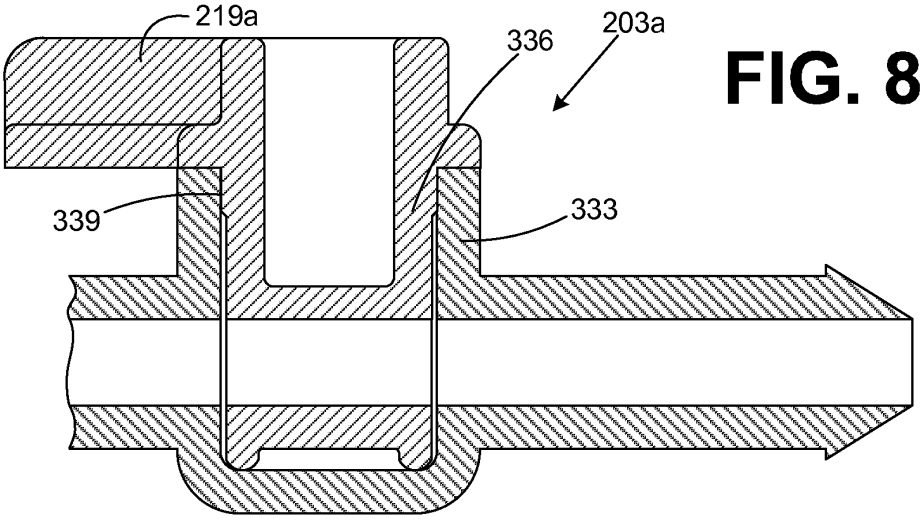

FIG. 8B

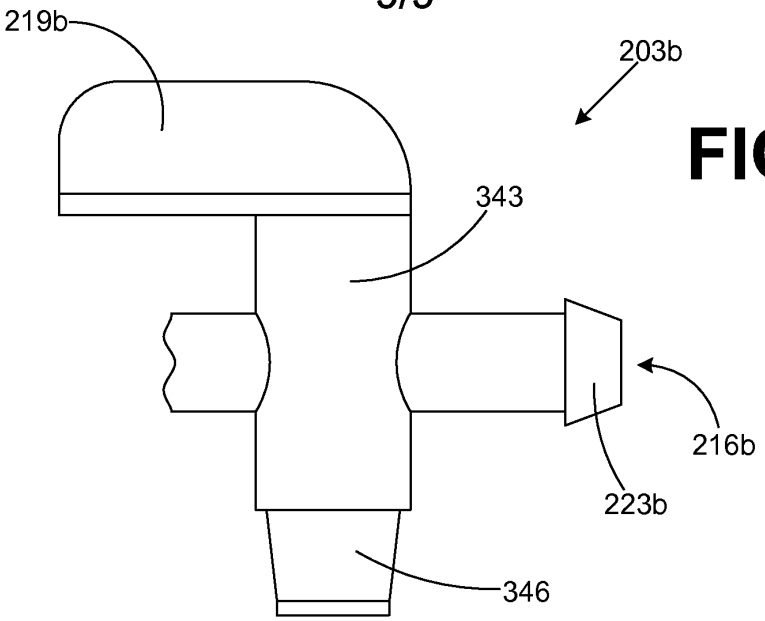

FIG. 9A

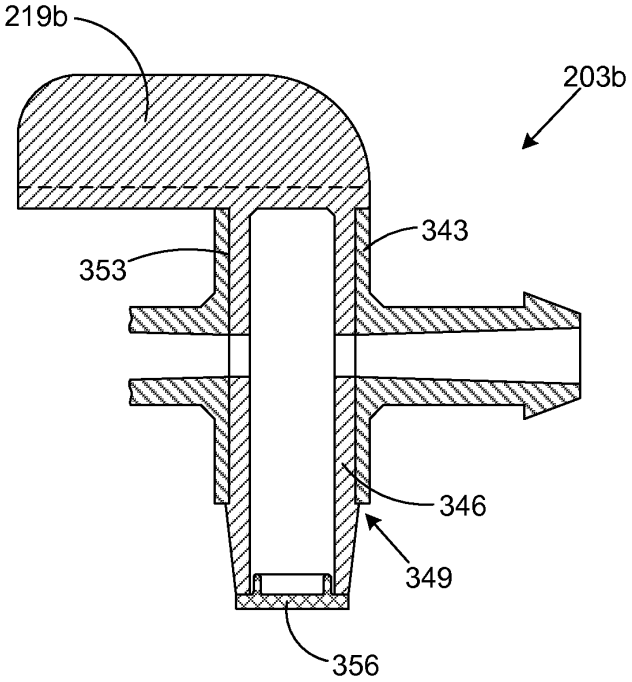

FIG. 9B

PATENT

IN THE UNITED STATES PATENT AND TRADEMARK OFFICE

In Re Application of:

Michael J. Schuster, et al.

Serial No.: tba

Filed: May 25, 2010

For: **Toilet Fill Valve with Adjustable Bowl Fill Flow**

Confirmation No.: tba

Group Art Unit: tba

Examiner: tba

Docket No. 171901-1032

PRELIMINARY AMENDMENT

Commissioner for Patents
P.O. Box 1450
Alexandria, Virginia 22313-1450

Sir:

In regard to the above-referenced application, the Applicants submit the following preliminary amendments and remarks to be respectively entered and considered prior to examination.

It is not believed that extensions of time or fees for net addition of claims are required, beyond those that may otherwise be provided for in documents accompanying this paper. However, in the event that additional extensions of time are necessary to allow consideration of this paper, such extensions are hereby petitioned under 37 C.F.R. § 1.136(a), and any fees required therefor (including fees for net addition of claims) are hereby authorized to be charged to Deposit Account No. 20-0778.

IN THE SPECIFICATION:

Amend the specification as follows:

Please delete paragraph [0001] and insert the following substitute paragraph in the same location:

CROSS REFERENCE TO RELATED APPLICATIONS

[0001] The present patent application is a Continuation Application of, and claims priority to, U.S. Patent Application entitled "Toilet Fill Valve with Adjustable Bowl Fill Flow" filed on October 5, 2004 and assigned Serial Number 10/958,797, which is a Continuation-in-Part Application of, and claims priority to, U.S. Patent 6,823,889 entitled "Toilet Fill Valve with Adjustable Bowl Fill Flow" filed on March 11, 2004.

IN THE CLAIMS:

Amend the claims as follows:

1. (Currently Amended) A toilet fill valve, comprising:

a water inlet;

a first water outlet configured to supply water to a toilet tank;

a bowl fill outlet port radially extending from a portion of a body of the toilet fill valve, the bowl fill outlet port being operatively coupled to the water inlet, and the bowl fill outlet port comprising an integrally molded portion of the body of the toilet fill valve;

a bowl fill valve having a bowl fill valve inlet port and a bowl fill valve outlet port, wherein the bowl fill valve inlet port is compatible with the bowl fill outlet port and the bowl fill valve inlet port being directly coupled to the bowl fill outlet port and establishing direct contact between the bowl fill outlet port and the bowl fill valve inlet port, wherein the bowl fill valve inlet port and the bowl fill valve outlet port each comprise an integrally molded portion of the bowl fill valve; ~~and~~

the bowl fill valve being configured to supply an adjustable flow of water out the bowl fill outlet port for filling a toilet bowl during a flush cycle of a toilet;

the bowl fill outlet port further comprising a first thread;

the bowl fill valve inlet port further comprising a second thread, the first thread being compatible with the second thread, and the first thread being engaged with the second thread and affixing the bowl fill valve inlet port to the bowl fill outlet port; and

a sealing ring clamped between a portion of the bowl fill outlet port and a portion of the bowl fill valve inlet port to form a seal between the bowl fill outlet port and the bowl fill valve inlet port.

2. (Original) The toilet fill valve of claim 1, wherein bowl fill valve extends beyond the bowl fill outlet port in a radial direction with respect to a portion of the body of the toilet fill valve.

3. (Currently Amended) The toilet fill valve of claim 1, wherein:

the bowl fill outlet port further comprises a female receptacle; and

the bowl fill valve inlet port further comprises a male end ~~compatible with the female receptacle~~.

4. (Currently Amended) The toilet fill valve of claim 1, wherein:

the bowl fill valve inlet port further comprises a female receptacle; and

the bowl fill outlet port further comprises a male end ~~compatible with the female receptacle~~.

5. (Original) The toilet fill valve of claim 1, further comprising:

a float;

an actuating arm coupled to the float, the actuating arm radially extending in an orthogonal direction relative to a longitudinal axis of the toilet fill valve; and

the bowl fill valve extending in an orthogonal direction relative to the longitudinal axis of the toilet fill valve, wherein the actuating arm is angularly offset relative to the bowl fill valve, thereby preventing an interference with the bowl fill valve and a translational stem extending from the float to a free end of the actuating arm.

6. (Original) The toilet fill valve of claim 1, wherein the bowl fill valve outlet port further comprises a nipple adapted to mate with an end of a tube.

7. (Original) The toilet fill valve of claim 1, wherein the bowl fill valve further comprises a number of biased positions.

8-17. (Canceled)

18. (Currently Amended) A toilet with a toilet tank having an adjustable bowl fill water flow, comprising:

a toilet fill valve in the toilet tank, the toilet valve having a water inlet coupled to a water source outside of the toilet tank and a water outlet directing a flow of water into the toilet tank;

a bowl fill outlet port radially extending from a portion of a body of the toilet fill valve, the bowl fill outlet port being operatively coupled to the water inlet and the bowl fill outlet port comprising an integrally molded portion of the body of the toilet fill valve;

a bowl fill valve having a bowl fill valve inlet port and a bowl fill valve outlet port, wherein the bowl fill valve inlet port is compatible with the bowl fill outlet port and the bowl fill valve inlet port being directly coupled to the bowl fill outlet port and establishing direct contact between the bowl fill outlet port and the bowl fill valve inlet port, wherein the bowl fill valve inlet port and the bowl fill valve outlet port each comprise an integrally molded portion of the bowl fill valve;

a tube having a first end attached to the bowl fill valve outlet port and a second end directed into an overflow tube in the toilet tank, wherein a flow of water into the overflow tube is directed to a toilet bowl of the toilet; ~~and~~

the bowl fill valve being configured to supply an adjustable flow of water out the bowl fill valve outlet port through the tube and into the overflow tube for filling the toilet bowl during a flush cycle of a toilet;

the bowl fill outlet port further comprising a first thread;

the bowl fill valve inlet port further comprising a second thread, the first thread being compatible with the second thread, and the first thread being engaged with the second thread and affixing the bowl fill valve inlet port to the bowl fill outlet port; and

a sealing ring clamped between a portion of the bowl fill outlet port and a portion of the bowl fill valve inlet port to form a seal between the bowl fill outlet port and the bowl fill valve inlet port.

19. A method for providing an adjustable bowl fill water flow in a toilet fill valve, comprising the steps of:

operatively coupling a bowl fill outlet port to a water inlet of the toilet fill valve;

radially extending the bowl fill outlet port from a portion of a body of the toilet fill valve; and

coupling a bowl fill valve inlet port of a bowl fill valve directly to the bowl fill outlet port by mating a first thread associated with the bowl fill outlet port with a second thread associated with the bowl fill valve inlet port, wherein the bowl fill valve inlet port is coupled to the bowl fill outlet port via the first and second threads, the bowl fill valve inlet port being compatible with the bowl fill outlet port, and the bowl fill valve being configured to provide for the adjustable bowl fill water flow out a bowl fill valve outlet port of the bowl fill valve for filling a toilet bowl during a flush cycle of a toilet; and

clamping a sealing ring between a portion of the bowl fill valve inlet port and a portion of the bowl fill outlet port.

20-25. (Canceled)

REMARKS

Upon entry of this Preliminary Amendment, Applicants have added the priority information regarding this continuation application. Also, claims 1, 3, 4, 18, and 19 have been amended, and claims 8-17 and 12-25 have been canceled. It is believed that the foregoing amendments and additions add no new matter to the present application. Favorable action in regard to the application is earnestly solicited.

Respectfully submitted,

THOMAS, KAYDEN, HORSTEMEYER & RISLEY, L.L.P.

/Michael J. D'Aurelio/

Michael J. D'Aurelio 40,977

600 Galleria Parkway
Suite 1500
Atlanta, Georgia 30339-5948
(770) 933-9500

IN THE UNITED STATES PATENT AND TRADEMARK OFFICE
UNITED STATES PATENT AND TRADEMARK OFFICE

In re the application of:	Confirmation: tba
Michael J. Schuster et al.	Art Unit: tba
Application Number: tba	Examiner: tba
Filing Date: May 25, 2010	Docket No.: 171901-1032

Title: **TOILET FILL VALVE WITH ADJUSTABLE BOWL FILL FLOW**

INFORMATION DISCLOSURE STATEMENT

Mail Stop
Commissioner for Patents
P.O. Box 1450
Alexandria, Virginia 22313-1450

Sir:

This information disclosure statement is filed in accordance with 37 C.F.R. §§ 1.56, 1.97, and 1.98, and specifically:

☒ under 37 CFR 1.97(b), or
(within Three months of filing national application; or date of entry of international application; or before mailing date of first office action on the merits; whichever occurs last)

☐ under 37 CFR 1.97(c) together with either a:
- ☐ Statement Under 37 C.F.R. 1.97(e), or
- ☐ a $180.00 fee under 37 CFR 1.17(p), or
(After the CFR 1.97(b) time period, but before the final office action or notice of allowance, whichever occurs first)

☐ under 37 CFR 1.97(d) together with a:
- ☐ Statement under 37 CFR 1.97(e), and
- ☐ a $180.00 petition fee set forth in 37 CFR 1.17(p).
(Filed after final office action or notice of allowance, whichever occurs first, but before payment of the issue fee)

☐ Enclosed is a check in the amount of $.

☐ Payment by Credit Card to be submitted via EFS.

☐ Please charge $ to deposit account .

☒ At any time during the pendency of this application, please charge any fees required to Deposit Account 20-0778 pursuant to 37 CFR 1.25. The Commissioner is hereby requested to credit any overpayment to Deposit Account No. 20-0778.

☒ Applicant(s) submit herewith *Form PTO SB/08A-08B-08a - Information Disclosure Statement by Applicant* together with copies (where required) of patents, publications or other information of which applicant(s) are aware, which applicant(s) believe(s) may or may not be material to the examination of this application and for which there may be a duty to disclose in accordance with 37 CFR 1.56. As required by 37 C.F.R. §1.98(a), a legible copy of each document is provided.

☐ A concise explanation of the relevance of foreign language patents, foreign language publications and other foreign language information listed on PTO Form SB/08A-08B-08a, as presently understood by the individual(s) designated in 37 CFR 1.56(c) most knowledgeable about the content is given on the attached sheet, or where a foreign language patent is cited in a search report or other action by a foreign patent office in a counterpart foreign application, an English language version of the search report or action which indicates the degree of relevance found by the foreign office is listed on the form PTO SB/08A-08B-08a and is enclosed herewith.

The following rights are reserved by the Applicant(s): the right to establish the patentability of the claimed invention over any of the listed documents should they be applied as reference, and/or the right to prove that some of these documents may not be prior art, and/or the right to prove that some of these documents may not be enabling for the teachings they purport to offer.

This statement should not be construed as a representation that an exhaustive search has been made, or that information more material to the examination of the present application does not exist. Any statements or identifications regarding the relevance of any portion(s) of cited references should not be construed as a representation that the most relevant portion(s) have been identified, and the absence of such statements or identifications should not be construed as representations that there are no relevant portion(s). The Examiner is specifically requested not to rely solely on the materials submitted herewith. The Examiner is requested to conduct an independent and thorough review of the documents, and to form independent opinions as to their significance.

It is requested that the information disclosed herein be made of record in this application and that the Examiner initial and return a copy of the enclosed PTO SB/08A-08B-08a to indicate the documents have been considered.

Respectfully Submitted,

THOMAS, KAYDEN, HORSTEMEYER & RISLEY, L.L.P.

/Michael J. D'Aurelio/

By: _____

Michael J. D'Aurelio, Reg. No. 40977

600 Galleria Parkway, S.E.
Suite 1500
Atlanta, Georgia 30339-5948
Phone: (770) 933-9500

PTO/SB/06 (12-04)
Approved for use through 7/31/2006. OMB 0651-0032
U.S. Patent and Trademark Office; U.S. DEPARTMENT OF COMMERCE

Date: 05/25/10

Under the Paperwork Reduction Act of 1995, no persons are required to respond to a collection of information unless it displays a valid OMB control number.

PATENT APPLICATION FEE DETERMINATION RECORD

Substitute for Form PTO-875

Application or Docket Number: 12/786,904

APPLICATION AS FILED – PART I

FOR	(Column 1) NUMBER FILED	(Column 2) NUMBER EXTRA	SMALL ENTITY RATE ($)	SMALL ENTITY FEE ($)	OR	OTHER THAN SMALL ENTITY RATE ($)	OTHER THAN SMALL ENTITY FEE ($)
BASIC FEE (37 CFR 1.16(a), (b), or (c))	N/A	N/A	N/A	82		N/A	
SEARCH FEE (37 CFR 1.16(k), (i), or (m))	N/A	N/A	N/A	270		N/A	
EXAMINATION FEE (37 CFR 1.16(o), (p), or (q))	N/A	N/A	N/A	110		N/A	
TOTAL CLAIMS (37 CFR 1.16(i))	9 minus 20 =		x$26		OR	x$52	
INDEPENDENT CLAIMS (37 CFR 1.16(h))	3 minus 3 =	*	x$110			x$220	
APPLICATION SIZE FEE (37 CFR 1.16(s))	If the specification and drawings exceed 100 sheets of paper, the application size fee due is $270 ($135 for small entity) for each additional 50 sheets or fraction thereof. See 35 U.S.C. 41(a)(1)(G) and 37 CFR						
MULTIPLE DEPENDENT CLAIM PRESENT (37 CFR 1.16(j))			195			390	
			TOTAL	462		TOTAL	

* If the difference in column 1 is less than zero, enter "0" in column 2.

APPLICATION AS AMENDED – PART II

AMENDMENT A

	(Column 1) CLAIMS REMAINING AFTER AMENDMENT		(Column 2) HIGHEST NUMBER PREVIOUSLY PAID FOR	(Column 3) PRESENT EXTRA	SMALL ENTITY RATE ($)	SMALL ENTITY ADDI-TIONAL FEE ($)	OR	OTHER THAN SMALL ENTITY RATE ($)	OTHER THAN SMALL ENTITY ADDI-TIONAL FEE ($)
Total (37 CFR 1.16(i))	*	Minus	**	=	x =		OR	x =	
Independent (37 CFR 1.16(h))	*	Minus	***	=	x =		OR	x =	
Application Size Fee (37 CFR 1.16(s))									
FIRST PRESENTATION OF MULTIPLE DEPENDENT CLAIM (37 CFR 1.16(j))					N/A		OR	N/A	
					TOTAL ADD'T FEE		OR	TOTAL ADD'T FEE	

AMENDMENT B

	(Column 1) CLAIMS REMAINING AFTER AMENDMENT		(Column 2) HIGHEST NUMBER PREVIOUSLY PAID FOR	(Column 3) PRESENT EXTRA	RATE ($)	ADDI-TIONAL FEE ($)	OR	RATE ($)	ADDI-TIONAL FEE ($)
Total (37 CFR 1.16(i))	*	Minus	**	=	x =		OR	x =	
Independent (37 CFR 1.16(h))	*	Minus	***	=	x =		OR	x =	
Application Size Fee (37 CFR 1.16(s))									
FIRST PRESENTATION OF MULTIPLE DEPENDENT CLAIM (37 CFR 1.16(j))					N/A		OR	N/A	
					TOTAL ADD'T FEE		OR	TOTAL ADD'T FEE	

* If the entry in column 1 is less than the entry in column 2, write "0" in column 3.
** If the "Highest Number Previously Paid For" IN THIS SPACE is less than 20, enter "20".
*** If the "Highest Number Previously Paid For" IN THIS SPACE is less than 3, enter "3".
The "Highest Number Previously Paid For" (Total or Independent) is the highest number found in the appropriate box in column 1.

This collection of information is required by 37 CFR 1.16. The information is required to obtain or retain a benefit by the public which is to file (and by the USPTO to process) an application. Confidentiality is governed by 35 U.S.C. 122 and 37 CFR 1.14. This collection is estimated to take 12 minutes to complete, including gathering, preparing, and submitting the completed application form to the USPTO. Time will vary depending upon the individual case. Any comments on the amount of time you require to complete this form and/or suggestions for reducing this burden, should be sent to the Chief Information Officer, U.S. Paten and Trademark Office, U.S. Department of Commerce, P.O. Box 1450, Alexandria, VA 22313-1450. DO NOT SEND FEES OR COMPLETED FORMS TO THIS ADDRESS. **SEND TO: Commissioner for Patents, P.O. Box 1450, Alexandria, VA 22313-1450.**

If you need assistance in completing the form, call 1-800-PTO-9199 and select option 2.

PTO/SB/06 (07-06)
Approved for use through 1/31/2007. OMB 0651-0032
U.S. Patent and Trademark Office; U.S. DEPARTMENT OF COMMERCE
Under the Paperwork Reduction Act of 1995, no persons are required to respond to a collection of information unless it displays a valid OMB control number.

PATENT APPLICATION FEE DETERMINATION RECORD

Substitute for Form PTO-875

Application or Docket Number	Filing Date	
12/786,904	05/25/2010	☐ To be Mailed

APPLICATION AS FILED – PART I

FOR	(Column 1) NUMBER FILED	(Column 2) NUMBER EXTRA	SMALL ENTITY ☒ RATE ($)	SMALL ENTITY FEE ($)	OR	OTHER THAN SMALL ENTITY RATE ($)	OTHER THAN SMALL ENTITY FEE ($)
☐ BASIC FEE (37 CFR 1.16(a), (b), or (c))	N/A	N/A	N/A			N/A	
☐ SEARCH FEE (37 CFR 1.16(k), (i), or (m))	N/A	N/A	N/A			N/A	
☐ EXAMINATION FEE (37 CFR 1.16(o), (p), or (q))	N/A	N/A	N/A			N/A	
TOTAL CLAIMS (37 CFR 1.16(i))	minus 20 =	*	X $ =		OR	X $ =	
INDEPENDENT CLAIMS (37 CFR 1.16(h))	minus 3 =	*	X $ =			X $ =	
☐ APPLICATION SIZE FEE (37 CFR 1.16(s))	If the specification and drawings exceed 100 sheets of paper, the application size fee due is $250 ($125 for small entity) for each additional 50 sheets or fraction thereof. See 35 U.S.C. 41(a)(1)(G) and 37 CFR 1.16(s).						
☐ MULTIPLE DEPENDENT CLAIM PRESENT (37 CFR 1.16(j))							
* If the difference in column 1 is less than zero, enter "0" in column 2.			TOTAL			TOTAL	

APPLICATION AS AMENDED – PART II

AMENDMENT 05/25/2010

	(Column 1) CLAIMS REMAINING AFTER AMENDMENT		(Column 2) HIGHEST NUMBER PREVIOUSLY PAID FOR	(Column 3) PRESENT EXTRA	SMALL ENTITY RATE ($)	SMALL ENTITY ADDITIONAL FEE ($)	OR	OTHER THAN SMALL ENTITY RATE ($)	OTHER THAN SMALL ENTITY ADDITIONAL FEE ($)
Total (37 CFR 1.16(i))	* 9	Minus	** 20	= 0	X $26 =	0	OR	X $ =	
Independent (37 CFR 1.16(h))	* 3	Minus	***3	= 0	X $110 =	0	OR	X $ =	
☐ Application Size Fee (37 CFR 1.16(s))									
☐ FIRST PRESENTATION OF MULTIPLE DEPENDENT CLAIM (37 CFR 1.16(j))							OR		
					TOTAL ADD'L FEE	0	OR	TOTAL ADD'L FEE	

AMENDMENT

	(Column 1) CLAIMS REMAINING AFTER AMENDMENT		(Column 2) HIGHEST NUMBER PREVIOUSLY PAID FOR	(Column 3) PRESENT EXTRA	RATE ($)	ADDITIONAL FEE ($)	OR	RATE ($)	ADDITIONAL FEE ($)
Total (37 CFR 1.16(i))	*	Minus	**	=	X $ =		OR	X $ =	
Independent (37 CFR 1.16(h))	*	Minus	***	=	X $ =		OR	X $ =	
☐ Application Size Fee (37 CFR 1.16(s))									
☐ FIRST PRESENTATION OF MULTIPLE DEPENDENT CLAIM (37 CFR 1.16(j))							OR		
					TOTAL ADD'L FEE		OR	TOTAL ADD'L FEE	

* If the entry in column 1 is less than the entry in column 2, write "0" in column 3.
** If the "Highest Number Previously Paid For" IN THIS SPACE is less than 20, enter "20".
*** If the "Highest Number Previously Paid For" IN THIS SPACE is less than 3, enter "3".
The "Highest Number Previously Paid For" (Total or Independent) is the highest number found in the appropriate box in column 1.

Legal Instrument Examiner:
/CORALIA BETANCOURT/

This collection of information is required by 37 CFR 1.16. The information is required to obtain or retain a benefit by the public which is to file (and by the USPTO to process) an application. Confidentiality is governed by 35 U.S.C. 122 and 37 CFR 1.14. This collection is estimated to take 12 minutes to complete, including gathering, preparing, and submitting the completed application form to the USPTO. Time will vary depending upon the individual case. Any comments on the amount of time you require to complete this form and/or suggestions for reducing this burden, should be sent to the Chief Information Officer, U.S. Patent and Trademark Office, U.S. Department of Commerce, P.O. Box 1450, Alexandria, VA 22313-1450. DO NOT SEND FEES OR COMPLETED FORMS TO THIS ADDRESS. **SEND TO: Commissioner for Patents, P.O. Box 1450, Alexandria, VA 22313-1450.**
If you need assistance in completing the form, call 1-800-PTO-9199 and select option 2.