UNITED STATES PATENT AND TRADEMARK OFFICE

UNITED STATES DEPARTMENT OF COMMERCE
United States Patent and Trademark Office
Address: COMMISSIONER FOR PATENTS
P.O. Box 1450
Alexandria, Virginia 22313-1450
www.uspto.gov

APPLICATION NUMBER	FILING OR 371(C) DATE	FIRST NAMED APPLICANT	ATTY.DOCKET NO./TITLE	REQUEST ID
10/798,606	03/11/2004	Michael J. Schuster	171401-1030	5747

Acknowledgement of Loss of Entitlement to Entity Status Discount

The entity status change request below filed through Private PAIR on 10/15/2015 has been accepted.

CERTIFICATIONS:

Change of Entity Status:

X Applicant changing to regular undiscounted fee status.
NOTE: Checking this box will be taken to be notification of loss of entitlement to small or micro entity status, as applicable.

This portion must be completed by the signatory or signatories making the entity status change in accordance with 37 CFR 1.4(d)(4).

Signature:	/Michael J. D'Aurelio/
Name:	Michael J. D'Aurelio
Registration Number:	40977

UNITED STATES PATENT AND TRADEMARK OFFICE

CERTIFICATE OF CORRECTION

PATENT NO. : 6,823,889 B1
DATED : November 30, 2004
INVENTOR(S) : Michael J. Schuster

It is certified that error appears in the above-identified patent and that said Letters Patent is hereby corrected as shown below:

Column 10,
Line 15, please replace claim 10 as follows:

-- 10. The method of claim 9, further comprising preventing a creation of a pressure head in a tube that is coupled between an outlet of the bowl fill valve and an overflow tube in the toilet by integrating the bowl fill valve with a portion of the toilet fill valve. --.

Signed and Sealed this

Eleventh Day of October, 2005

JON W. DUDAS
Director of the United States Patent and Trademark Office

10/798 606

PATENT

OIPE JC105
AUG 1 5 2005
PATENT & TRADEMARK OFFICE

Practitioner's Docket No. **171901-1030**

IN THE UNITED STATES PATENT AND TRADEMARK OFFICE

Patent Number: **6,823,889**

Issued: **November 30,2 004**

Name of Patentee: **Schuster**

Title of Invention: **Toilet Fill Valve with Adjustable Bowl Fill Flow**

Certificate
AUG 1 9 2005
of Correction

Commissioner for Patents
P.O. Box 1450
Alexandria, Virginia 22313-1450

Attention: Decision and Certificate of Correction
Branch of the Patent Issue Division

REQUEST FOR CERTIFICATE OF CORRECTION OF PATENT FOR PTO MISTAKE (37 C.F.R. § 1.322(a))

1. Attached, in duplicate, is PTO/SB/44 (also Form PTO-1050), with at least one copy being suitable for printing.

NOTE: Form PTO-1050 (or PTO/SB/44), using the column and line number in the printed patent, should be used exclusively regardless of the length or complexity of the subject matter. M.P.E.P § 1485, 7th ed.

NOTE: The patent grant should be retained by the patentee. The PTO does not attach the certificate of correction to the patentee's copy of the patent. The patent grant will be returned to the patentee if submitted. M.P.E.P. § 1485.

2. The exact page and line number where the errors are shown correctly in the application file are:

NOTE: This information should be identified in this request; however, on Form PTO-1050, only the column and line number in the printed patent should be used. M.P.E.P. §1485, 7th ed.

Claim 10 of the patent is erroneous in that it was corrected by a Supplemental Examiner's Amendment dated October 8, 2004 (Paper No. 20041004) and that amendment was never entered by the Patent Office.

Included herewith is an annotated copy of the claim 10 as amended by the Supplemental Examiner's Amendment and a clean copy of the corrected claim 10 as it should read.

It is believed to be clear that the failure to amend original claim 10 was the fault of the U.S. Patent and Trademark Office and that no fee for the Certificate of Correction is chargeable to the applicant or his assignee.

AUG 2 3 2005

Fluidmaster, Inc. - EX1012, Page 003
IPR2024-00633 (Fluidmaster Inc v. Danco Inc)

3. Please send the Certificate to:

Name: **Michael J. D'Aurelio**

Address: Thomas, Kayden,
Horstemeyer, & Risley, L.L.P.
100 Galleria Parkway, Suite 1750
Atlanta, Georgia 30339

Michael J. D'Aurelio

SIGNATURE OF PRACTITIONER

Michael J. D'Aurelio, Reg. No. 40,977

(type or print name of practitioner)

Tel. No.: **(770) 933-9500**

Thomas, Kayden,
Horstemeyer, & Risley, L.L.P.
100 Galleria Parkway, Suite 1750
Atlanta, Georgia 30339

Customer No.: 24504

NOTE: The certificate of correction, under 35 U.S.C. 254, may be issued at the request of the patentee or [the patentee's] assignee." 37 C.F.R. §1.322(a). The certificate of correction can be signed by the attorney of record who acts on behalf of the inventor(s) or assignee(s).

CERTIFIED MAILING

I hereby certify that this correspondence is being deposited with the United States Postal Service as "First Class Mail," in an envelope addressed to: Commissioner for Patents, P.O. Box 1450, Alexandria, VA 22313-1450 on August 11, 2005.

Julie Campbell

Signature

AUG 23 2005

Fluidmaster, Inc. - EX1012, Page 004
IPR2024-00633 (Fluidmaster Inc v. Danco Inc)

PTO/SB/44 (04-05)
Approved for use through 04/30/2007. OMB 0651-0033
U.S. Patent and Trademark Office; U.S. DEPARTMENT OF COMMERCE
Under the Paperwork Reduction Act of 1995, no persons are required to respond to a collection of information unless it displays a valid OMB control number.
(Also Form PTO-1050)

UNITED STATES PATENT AND TRADEMARK OFFICE
CERTIFICATE OF CORRECTION

PATENT NO. : 6,823,889

APPLICATION NO.: 10/798,606

ISSUE DATE : November 30, 2004

INVENTOR(S) : Michael J. Schuster

It is certified that an error appears or errors appear in the above-identified patent and that said Letters Patent is hereby corrected as shown below:

Please replace claim 10 as follows:

--10. The method of claim 9, further comprising preventing a creation of a pressure head in a tube that is coupled between an outlet of the bowl fill valve and an overflow tube in the toilet by integrating the bowl fill valve with a portion of the toilet fill valve.--

MAILING ADDRESS OF SENDER (Please do not use customer number below):

THOMAS, KAYDEN, HORSTEMEYER & RISLEY, L.L.P.
100 Galleria Parkway, Suite 1750
Atlanta, Georgia 30339

This collection of information is required by 37 CFR 1.322, 1.323, and 1.324. The information is required to obtain or retain a benefit by the public which is to file (and by the USPTO to process) an application. Confidentiality is governed by 35 U.S.C. 122 and 37 CFR 1.14. This collection is estimated to take 1.0 hour to complete, including gathering, preparing, and submitting the completed application form to the USPTO. Time will vary depending upon the individual case. Any comments on the amount of time you require to complete this form and/or suggestions for reducing this burden, should be sent to the Chief Information Officer, U.S. Patent and Trademark Office, U.S. Department of Commerce, P.O. Box 1450, Alexandria, VA 22313-1450. DO NOT SEND FEES OR COMPLETED FORMS TO THIS ADDRESS. **SEND TO: Attention Certificate of Corrections Branch, Commissioner for Patents, P.O. Box 1450, Alexandria, VA 22313-1450.**

If you need assistance in completing the form, call 1-800-PTO-9199 and select option 2.

AUG 23 2005

UNITED STATES PATENT AND TRADEMARK OFFICE

UNITED STATES DEPARTMENT OF COMMERCE
United States Patent and Trademark Office
Address: COMMISSIONER FOR PATENTS
P.O. Box 1450
Alexandria, Virginia 22313-1450
www.uspto.gov

Bib Data Sheet

CONFIRMATION NO. 6196

SERIAL NUMBER	FILING OR 371(c) DATE	CLASS	GROUP ART UNIT	ATTORNEY DOCKET NO.
10/798,606	03/11/2004 RULE	137	3753	1008-100500

APPLICANTS

Michael J. Schuster, Joliet, IL;

**** CONTINUING DATA **************************

**** FOREIGN APPLICATIONS **********************

IF REQUIRED, FOREIGN FILING LICENSE GRANTED ** SMALL ENTITY **
** 05/27/2004

Foreign Priority claimed 35 USC 119 (a-d) conditions met Verified and Acknowledged Examiner's Signature Initials	☐ yes ☐ no ☐ yes ☐ no ☐ Met after Allowance	STATE OR COUNTRY IL	SHEETS DRAWING 3	TOTAL CLAIMS 10	INDEPENDENT CLAIMS 3

ADDRESS

33852

TITLE

TOILET FILL VALVE WITH ADJUSTABLE BOWL FILL FLOW

FILING FEE RECEIVED 385	FEES: Authority has been given in Paper No. _____ to charge/credit DEPOSIT ACCOUNT No. _____ for following:	☐ All Fees ☐ 1.16 Fees (Filing) ☐ 1.17 Fees (Processing Ext. of time) ☐ 1.18 Fees (Issue) ☐ Other _____ ☐ Credit

OIPE
OCT 2 0 2004
PATENT & TRADEMARK OFFICE

PART B - FEE(S) TRANSMITTAL

Complete and send this form, together with applicable fee(s), to: Mail Mail Stop ISSUE FEE
Commissioner for Patents
P.O. Box 1450
Alexandria, Virginia 22313-1450
or Fax (703) 746-4000

INSTRUCTIONS: This form should be used for transmitting the ISSUE FEE and PUBLICATION FEE (if required). Blocks 1 through 5 should be completed where appropriate. All further correspondence including the Patent, advance orders and notification of maintenance fees will be mailed to the current correspondence address as indicated unless corrected below or directed otherwise in Block 1, by (a) specifying a new correspondence address; and/or (b) indicating a separate "FEE ADDRESS" for maintenance fee notifications.

CURRENT CORRESPONDENCE ADDRESS (Note: Use Block 1 for any change of address)

7590 07/21/2004

Michael J. D'Aurelio
D'Aurelio & Mathews, LLC
96 Church Street
Chagrin Falls, OH 44022

10/20/2004 AKELECH2 00000107 502425 10798606
01 FC:2501 20.00 DA 665.00 OP

Note: A certificate of mailing can only be used for domestic mailings of the Fee(s) Transmittal. This certificate cannot be used for any other accompanying papers. Each additional paper, such as an assignment or formal drawing, must have its own certificate of mailing or transmission.

Certificate of Mailing or Transmission
I hereby certify that this Fee(s) Transmittal is being deposited with the United States Postal Service with sufficient postage for first class mail in an envelope addressed to the Mail Stop ISSUE FEE address above, or being facsimile transmitted to the USPTO (703) 746-4000, on the date indicated below.

Michael J. D'Aurelio	(Depositor's name)
Michael J. D'Aurelio	(Signature)
10/20/04	(Date)

APPLICATION NO.	FILING DATE	FIRST NAMED INVENTOR	ATTORNEY DOCKET NO.	CONFIRMATION NO.
10/798,606	03/11/2004	Michael J. Schuster	1008-100500	6196

TITLE OF INVENTION: TOILET FILL VALVE WITH ADJUSTABLE BOWL FILL FLOW

APPLN. TYPE	SMALL ENTITY	ISSUE FEE	PUBLICATION FEE	TOTAL FEE(S) DUE	DATE DUE
nonprovisional	YES	$665	$0	$665	10/21/2004

EXAMINER	ART UNIT	CLASS-SUBCLASS
WALTON, GEORGE L	3753	137-441000

1. Change of correspondence address or indication of "Fee Address" (37 CFR 1.363).
☒ Change of correspondence address (or Change of Correspondence Address form PTO/SB/122) attached.
☒ "Fee Address" indication (or "Fee Address" Indication form PTO/SB/47; Rev 03-02 or more recent) attached. Use of a Customer Number is required.

2. For printing on the patent front page, list
(1) the names of up to 3 registered patent attorneys or agents OR, alternatively,
(2) the name of a single firm (having as a member a registered attorney or agent) and the names of up to 2 registered patent attorneys or agents. If no name is listed, no name will be printed.
1 D'Aurelio & Mathews
2
3

3. ASSIGNEE NAME AND RESIDENCE DATA TO BE PRINTED ON THE PATENT (print or type)
PLEASE NOTE: Unless an assignee is identified below, no assignee data will appear on the patent. If an assignee is identified below, the document has been filed for recordation as set forth in 37 CFR 3.11. Completion of this form is NOT a substitute for filing an assignment.

(A) NAME OF ASSIGNEE (B) RESIDENCE: (CITY and STATE OR COUNTRY)

MJSI, Inc. Joliet, Illinois

Please check the appropriate assignee category or categories (will not be printed on the patent); ☐ individual ☒ corporation or other private group entity ☐ government

4a. The following fee(s) are enclosed:
☒ Issue Fee
☐ Publication Fee (No small entity discount permitted)
☐ Advance Order - # of Copies _____

4b. Payment of Fee(s):
☐ A check in the amount of the fee(s) is enclosed.
☒ Payment by credit card. Form PTO-2038 is attached.
☒ The Director is hereby authorized to charge any insufficiencies, ~~to charge the required fee(s)~~, or credit any overpayment, to Deposit Account Number 50-2225 (enclose an extra copy of this form).

5. Change in Entity Status (from status indicated above)
☐ a. Applicant claims SMALL ENTITY status. See 37 CFR 1.27.
☐ b. Applicant is not claiming SMALL ENTITY status. See, e.g., 37 CFR 1.27(g)(2).

The Director of the USPTO is requested to apply the Issue Fee and Publication Fee (if any) or to re-apply any previously paid issue fee to the application identified above.

NOTE: The Issue Fee and Publication Fee (if required) will not be accepted from anyone other than the applicant; a registered attorney or agent; or the assignee or other party in interest as shown by the records of the United States Patent and Trademark Office.

(Authorized Signature) (Date)
Michael J. D'Aurelio 10/20/04

This collection of information is required by 37 CFR 1.311. The information is required to obtain or retain a benefit by the public which is to file (and by the USPTO to process) an application. Confidentiality is governed by 35 U.S.C. 122 and 37 CFR 1.14. This collection is estimated to take 12 minutes to complete, including gathering, preparing, and submitting the completed application form to the USPTO. Time will vary depending upon the individual case. Any comments on the amount of time you require to complete this form and/or suggestions for reducing this burden, should be sent to the Chief Information Officer, U.S. Patent and Trademark Office, U.S. Department of Commerce, P.O. Box 1450, Alexandria, Virginia 22313-1450. DO NOT SEND FEES OR COMPLETED FORMS TO THIS ADDRESS. SEND TO: Commissioner for Patents, P.O. Box 1450, Alexandria, Virginia 22313-1450.

Under the Paperwork Reduction Act of 1995, no persons are required to respond to a collection of information unless it displays a valid OMB control number.

TRANSMIT THIS FORM WITH FEE(S)

PAGE 1/4 * RCVD AT 10/20/2004 12:28:12 PM [Eastern Daylight Time] * SVR:USPTO-EFXRF-2/4 * DNIS:7464000 * CSID:440 729 7465 * DURATION (mm-ss):02-40

OIPE JC16
OCT 2 0 2004
PATENT & TRADEMARK OFFICE

PTO/SB/122 (09-03)
Approved for use through 11/30/2005. OMB 0651-0035
U.S. Patent and Trademark Office; U.S. DEPARTMENT OF COMMERCE
Under the Paperwork Reduction Act of 1995, no persons are required to respond to a collection of information unless it displays a valid OMB control number.

CHANGE OF CORRESPONDENCE ADDRESS
Application

Address to:
Commissioner for Patents
P.O. Box 1450
Alexandria, VA 22313-1450.

Application Number	10/798,606
Filing Date	3/11/2004
First Named Inventor	Michael J. Schuster
Art Unit	3753
Examiner Name	Walton, George L.
Attorney Docket Number	1008-100500

Please change the Correspondence Address for the above-identified patent application to:

☑ Customer Number: 33852

OR

☐ Firm or Individual Name					
Address					
Address					
City		State		Zip	
Country					
Telephone		Fax			

This form cannot be used to change the data associated with a Customer Number. To change the data associated with an existing Customer Number use "Request for Customer Number Data Change" (PTO/SB/124).

I am the:

☐ Applicant/Inventor

☐ Assignee of record of the entire interest.
Statement under 37 CFR 3.73(b) is enclosed. (Form PTO/SB/96).

☑ Attorney or Agent of record. Registration Number 40,977.

☐ Registered practitioner named in the application transmittal letter in an application without an executed oath or declaration. See 37 CFR 1.33(a)(1). Registration Number_____.

Typed or Printed Name Michael J. D'Aurelio

Signature Michael J. D'Aurelio

Date 10/20/04 Telephone (440) 729-7450

NOTE: Signatures of all the inventors or assignees of record of the entire interest or their representative(s) are required. Submit multiple forms if more than one signature is required, see below*.

☐ *Total of _____ forms are submitted.

This collection of information is required by 37 CFR 1.33. The information is required to obtain or retain a benefit by the public which is to file (and by the USPTO to process) an application. Confidentiality is governed by 35 U.S.C. 122 and 37 CFR 1.14. This collection is estimated to take 3 minutes to complete, including gathering, preparing, and submitting the completed application form to the USPTO. Time will vary depending upon the individual case. Any comments on the amount of time you require to complete this form and/or suggestions for reducing this burden, should be sent to the Chief Information Officer, U.S. Patent and Trademark Office, U.S. Department of Commerce, P.O. Box 1450, Alexandria, VA 22313-1450. DO NOT SEND FEES OR COMPLETED FORMS TO THIS ADDRESS. SEND TO: **Commissioner for Patents, P.O. Box 1450, Alexandria, VA 22313-1450.**

If you need assistance in completing the form, call 1-800-PTO-9199 and select option 2.

UNITED STATES PATENT AND TRADEMARK OFFICE

UNITED STATES DEPARTMENT OF COMMERCE
United States Patent and Trademark Office
Address: COMMISSIONER FOR PATENTS
P.O. Box 1450
Alexandria, Virginia 22313-1450
www.uspto.gov

APPLICATION NO.	FILING DATE	FIRST NAMED INVENTOR	ATTORNEY DOCKET NO.	CONFIRMATION NO.
10/798,606	03/11/2004	Michael J. Schuster	1008-100500	6196

7590 10/08/2004

Michael J. D'Aurelio
D'Aurelio & Mathews, LLC
96 Church Street
Chagrin Falls, OH 44022

EXAMINER
WALTON, GEORGE L

ART UNIT	PAPER NUMBER
3753	

DATE MAILED: 10/08/2004

Please find below and/or attached an Office communication concerning this application or proceeding.

PTO-90C (Rev. 10/03)

Supplemental Notice of Allowability	Application No.	Applicant(s)
	10/798,606	SCHUSTER, MICHAEL J.
	Examiner	**Art Unit**
	George L. Walton	3753

-- The MAILING DATE of this communication appears on the cover sheet with the correspondence address--

All claims being allowable, PROSECUTION ON THE MERITS IS (OR REMAINS) CLOSED in this application. If not included herewith (or previously mailed), a Notice of Allowance (PTOL-85) or other appropriate communication will be mailed in due course. **THIS NOTICE OF ALLOWABILITY IS NOT A GRANT OF PATENT RIGHTS.** This application is subject to withdrawal from issue at the initiative of the Office or upon petition by the applicant. See 37 CFR 1.313 and MPEP 1308.

1. ☒ This communication is responsive to *the interview summary and the supplemental examiner's amendment*.

2. ☒ The allowed claim(s) is/are *1-10*.

3. ☐ The drawings filed on _____ are accepted by the Examiner.

4. ☐ Acknowledgment is made of a claim for foreign priority under 35 U.S.C. § 119(a)-(d) or (f).
   a) ☐ All b) ☐ Some* c) ☐ None of the:
      1. ☐ Certified copies of the priority documents have been received.
      2. ☐ Certified copies of the priority documents have been received in Application No. _____ .
      3. ☐ Copies of the certified copies of the priority documents have been received in this national stage application from the International Bureau (PCT Rule 17.2(a)).

   * Certified copies not received: _____.

Applicant has THREE MONTHS FROM THE "MAILING DATE" of this communication to file a reply complying with the requirements noted below. Failure to timely comply will result in ABANDONMENT of this application.
THIS THREE-MONTH PERIOD IS NOT EXTENDABLE.

5. ☐ A SUBSTITUTE OATH OR DECLARATION must be submitted. Note the attached EXAMINER'S AMENDMENT or NOTICE OF INFORMAL PATENT APPLICATION (PTO-152) which gives reason(s) why the oath or declaration is deficient.

6. ☐ CORRECTED DRAWINGS (as "replacement sheets") must be submitted.
   (a) ☐ including changes required by the Notice of Draftsperson's Patent Drawing Review (PTO-948) attached
      1) ☐ hereto or 2) ☐ to Paper No./Mail Date _____.
   (b) ☐ including changes required by the attached Examiner's Amendment / Comment or in the Office action of Paper No./Mail Date _____.

   Identifying indicia such as the application number (see 37 CFR 1.84(c)) should be written on the drawings in the front (not the back) of each sheet. Replacement sheet(s) should be labeled as such in the header according to 37 CFR 1.121(d).

7. ☐ DEPOSIT OF and/or INFORMATION about the deposit of BIOLOGICAL MATERIAL must be submitted. Note the attached Examiner's comment regarding REQUIREMENT FOR THE DEPOSIT OF BIOLOGICAL MATERIAL.

Attachment(s)

1. ☐ Notice of References Cited (PTO-892)
2. ☐ Notice of Draftperson's Patent Drawing Review (PTO-948)
3. ☐ Information Disclosure Statements (PTO-1449 or PTO/SB/08), Paper No./Mail Date _____
4. ☐ Examiner's Comment Regarding Requirement for Deposit of Biological Material
5. ☐ Notice of Informal Patent Application (PTO-152)
6. ☒ Interview Summary (PTO-413), Paper No./Mail Date *10/4/04* .
7. ☒ Examiner's Amendment/Comment
8. ☐ Examiner's Statement of Reasons for Allowance
9. ☐ Other _____.

Fluidmaster, Inc. - EX1012, Page 010
IPR2024-00633 (Fluidmaster Inc v. Danco Inc)

DETAILED ACTION

SUPPLEMENTAL EXAMINER'S AMENDMENT

An examiner's amendment to the record appears below. Should the changes and/or additions be unacceptable to applicant, an amendment may be filed as provided by 37 CFR 1.312. To ensure consideration of such an amendment, it MUST be submitted no later than the payment of the issue fee.

Authorization for this examiner's amendment was given in a telephone interview with Mr. Michael J. D'Aurelio on August 29, 2004.

The application has been amended as follows:

In claim 10, line 1, "toilet fill valve" has been changed to -- method -- and in line 3, "adjusting the bowl fill valve" has been changed to -- integrating the bowl fill valve with a portion of the toilet fill valve --.

Conclusion

Any inquiry concerning this communication or earlier communications from the examiner should be directed to George L. Walton whose telephone number is 703-308-2596. The examiner can normally be reached on M-F, 8:00-4:30. If attempts to reach the examiner by telephone are unsuccessful, the examiner's supervisor, Dave Scherbel can be reached on 703-308-1272. The fax phone number for the organization where this application or proceeding is assigned is 703-872-9306.

Information regarding the status of an application may be obtained from the Patent Application Information Retrieval (PAIR) system. Status information for published applications

may be obtained from either Private PAIR or Public PAIR. Status information for unpublished applications is available through Private PAIR only. For more information about the PAIR system, see http://pair-direct.uspto.gov. Should you have questions on access to the Private PAIR system, contact the Electronic Business Center (EBC) at 866-217-9197 (toll-free).

George L. Walton
Primary Examiner
Art Unit 3753

GLW

Examiner-Initiated Interview Summary	Application No.	Applicant(s)	
	10/798,606	SCHUSTER, MICHAEL J.	
	Examiner	Art Unit	
	George L. Walton	3753	

All Participants:

(1) *Mr. Michael J. D'Aurelio - attorney.*

(2) *Mr. George L. Walton - examiner.*

(3) _____.

(4) _____.

Status of Application: *2nd Action Allowance*

Date of Interview: *29 August 2004*

Time: *11:0 AM*

Type of Interview:
- ☒ Telephonic
- ☐ Video Conference
- ☐ Personal (Copy given to: ☐ Applicant ☐ Applicant's representative)

Exhibit Shown or Demonstrated: ☐ Yes ☒ No
If Yes, provide a brief description: .

Part I.

Rejection(s) discussed:
None

Claims discussed:
10

Prior art documents discussed:
None

Part II.

SUBSTANCE OF INTERVIEW DESCRIBING THE GENERAL NATURE OF WHAT WAS DISCUSSED:
See Continuation Sheet

Part III.

☒ It is not necessary for applicant to provide a separate record of the substance of the interview, since the interview directly resulted in the allowance of the application. The examiner will provide a written summary of the substance of the interview in the Notice of Allowability.

☐ It is not necessary for applicant to provide a separate record of the substance of the interview, since the interview did not result in resolution of all issues. A brief summary by the examiner appears in Part II above.

(Examiner/SPE Signature)

(Applicant/Applicant's Representative Signature – if appropriate)

Fluidmaster, Inc. - EX1012, Page 013
IPR2024-00633 (Fluidmaster Inc v. Danco Inc)

Continuation of Substance of Interview including description of the general nature of what was discussed: In view of the above interview, changes were proposed and made to claim 10 to make the claim more clearer and consistent with the independent claim. Also, the correction was made to show a more definitive correlation between the prevention of the creation of a pressure head within a tube and the integration of the bowl fill valve being in a portion of the toilet fill valve. See the accompanying "Examiner's Amendment" for greater details.

UNITED STATES PATENT AND TRADEMARK OFFICE

UNITED STATES DEPARTMENT OF COMMERCE
United States Patent and Trademark Office
Address: COMMISSIONER FOR PATENTS
P.O. Box 1450
Alexandria, Virginia 22313-1450
www.uspto.gov

NOTICE OF ALLOWANCE AND FEE(S) DUE

7590 07/21/2004

Michael J. D'Aurelio
D'Aurelio & Mathews, LLC
96 Church Street
Chagrin Falls, OH 44022

EXAMINER
WALTON, GEORGE L

ART UNIT	PAPER NUMBER
3753	

DATE MAILED: 07/21/2004

APPLICATION NO.	FILING DATE	FIRST NAMED INVENTOR	ATTORNEY DOCKET NO.	CONFIRMATION NO.
10/798,606	03/11/2004	Michael J. Schuster	1008-100500	6196

TITLE OF INVENTION: TOILET FILL VALVE WITH ADJUSTABLE BOWL FILL FLOW

APPLN. TYPE	SMALL ENTITY	ISSUE FEE	PUBLICATION FEE	TOTAL FEE(S) DUE	DATE DUE
nonprovisional	YES	$665	$0	$665	10/21/2004

THE APPLICATION IDENTIFIED ABOVE HAS BEEN EXAMINED AND IS ALLOWED FOR ISSUANCE AS A PATENT. PROSECUTION ON THE MERITS IS CLOSED. THIS NOTICE OF ALLOWANCE IS NOT A GRANT OF PATENT RIGHTS. THIS APPLICATION IS SUBJECT TO WITHDRAWAL FROM ISSUE AT THE INITIATIVE OF THE OFFICE OR UPON PETITION BY THE APPLICANT. SEE 37 CFR 1.313 AND MPEP 1308.

THE ISSUE FEE AND PUBLICATION FEE (IF REQUIRED) MUST BE PAID WITHIN THREE MONTHS FROM THE MAILING DATE OF THIS NOTICE OR THIS APPLICATION SHALL BE REGARDED AS ABANDONED. THIS STATUTORY PERIOD CANNOT BE EXTENDED. SEE 35 U.S.C. 151. THE ISSUE FEE DUE INDICATED ABOVE REFLECTS A CREDIT FOR ANY PREVIOUSLY PAID ISSUE FEE APPLIED IN THIS APPLICATION. THE PTOL-85B (OR AN EQUIVALENT) MUST BE RETURNED WITHIN THIS PERIOD EVEN IF NO FEE IS DUE OR THE APPLICATION WILL BE REGARDED AS ABANDONED.

HOW TO REPLY TO THIS NOTICE:

I. Review the SMALL ENTITY status shown above.

If the SMALL ENTITY is shown as YES, verify your current SMALL ENTITY status:

A. If the status is the same, pay the TOTAL FEE(S) DUE shown above.

B. If the status above is to be removed, check box 5b on Part B - Fee(s) Transmittal and pay the PUBLICATION FEE (if required) and twice the amount of the ISSUE FEE shown above, or

If the SMALL ENTITY is shown as NO:

A. Pay TOTAL FEE(S) DUE shown above, or

B. If applicant claimed SMALL ENTITY status before, or is now claiming SMALL ENTITY status, check box 5a on Part B - Fee(s) Transmittal and pay the PUBLICATION FEE (if required) and 1/2 the ISSUE FEE shown above.

II. PART B - FEE(S) TRANSMITTAL should be completed and returned to the United States Patent and Trademark Office (USPTO) with your ISSUE FEE and PUBLICATION FEE (if required). Even if the fee(s) have already been paid, Part B - Fee(s) Transmittal should be completed and returned. If you are charging the fee(s) to your deposit account, section "4b" of Part B - Fee(s) Transmittal should be completed and an extra copy of the form should be submitted.

III. All communications regarding this application must give the application number. Please direct all communications prior to issuance to Mail Stop ISSUE FEE unless advised to the contrary.

IMPORTANT REMINDER: Utility patents issuing on applications filed on or after Dec. 12, 1980 may require payment of maintenance fees. It is patentee's responsibility to ensure timely payment of maintenance fees when due.

PTOL-85 (Rev. 07/04) Approved for use through 04/30/2007.

Fluidmaster, Inc. - EX1012, Page 015
IPR2024-00633 (Fluidmaster Inc v. Danco Inc)

PART B - FEE(S) TRANSMITTAL

Complete and send this form, together with applicable fee(s), to: Mail **Mail Stop ISSUE FEE**
Commissioner for Patents
P.O. Box 1450
Alexandria, Virginia 22313-1450
or Fax (703) 746-4000

INSTRUCTIONS: This form should be used for transmitting the ISSUE FEE and PUBLICATION FEE (if required). Blocks 1 through 5 should be completed where appropriate. All further correspondence including the Patent, advance orders and notification of maintenance fees will be mailed to the current correspondence address as indicated unless corrected below or directed otherwise in Block 1, by (a) specifying a new correspondence address; and/or (b) indicating a separate "FEE ADDRESS" for maintenance fee notifications.

CURRENT CORRESPONDENCE ADDRESS (Note: Use Block 1 for any change of address)

7590 07/21/2004

Michael J. D'Aurelio
D'Aurelio & Mathews, LLC
96 Church Street
Chagrin Falls, OH 44022

Note: A certificate of mailing can only be used for domestic mailings of the Fee(s) Transmittal. This certificate cannot be used for any other accompanying papers. Each additional paper, such as an assignment or formal drawing, must have its own certificate of mailing or transmission.

Certificate of Mailing or Transmission

I hereby certify that this Fee(s) Transmittal is being deposited with the United States Postal Service with sufficient postage for first class mail in an envelope addressed to the Mail Stop ISSUE FEE address above, or being facsimile transmitted to the USPTO (703) 746-4000, on the date indicated below.

(Depositor's name)

(Signature)

(Date)

APPLICATION NO.	FILING DATE	FIRST NAMED INVENTOR	ATTORNEY DOCKET NO.	CONFIRMATION NO.
10/798,606	03/11/2004	Michael J. Schuster	1008-100500	6196

TITLE OF INVENTION: TOILET FILL VALVE WITH ADJUSTABLE BOWL FILL FLOW

APPLN. TYPE	SMALL ENTITY	ISSUE FEE	PUBLICATION FEE	TOTAL FEE(S) DUE	DATE DUE
nonprovisional	YES	$665	$0	$665	10/21/2004

EXAMINER	ART UNIT	CLASS-SUBCLASS
WALTON, GEORGE L	3753	137-441000

1. Change of correspondence address or indication of "Fee Address" (37 CFR 1.363).

❑ Change of correspondence address (or Change of Correspondence Address form PTO/SB/122) attached.

❑ "Fee Address" indication (or "Fee Address" Indication form PTO/SB/47; Rev 03-02 or more recent) attached. **Use of a Customer Number is required.**

2. For printing on the patent front page, list

(1) the names of up to 3 registered patent attorneys or agents OR, alternatively,

(2) the name of a single firm (having as a member a registered attorney or agent) and the names of up to 2 registered patent attorneys or agents. If no name is listed, no name will be printed.

1_____

2_____

3_____

3. ASSIGNEE NAME AND RESIDENCE DATA TO BE PRINTED ON THE PATENT (print or type)

PLEASE NOTE: Unless an assignee is identified below, no assignee data will appear on the patent. If an assignee is identified below, the document has been filed for recordation as set forth in 37 CFR 3.11. Completion of this form is NOT a substitute for filing an assignment.

(A) NAME OF ASSIGNEE (B) RESIDENCE: (CITY and STATE OR COUNTRY)

Please check the appropriate assignee category or categories (will not be printed on the patent); ❑ individual ❑ corporation or other private group entity ❑ government

4a. The following fee(s) are enclosed:

❑ Issue Fee

❑ Publication Fee (No small entity discount permitted)

❑ Advance Order - # of Copies _____

4b. Payment of Fee(s):

❑ A check in the amount of the fee(s) is enclosed.

❑ Payment by credit card. Form PTO-2038 is attached.

❑ The Director is hereby authorized by charge the required fee(s), or credit any overpayment, to Deposit Account Number _____ (enclose an extra copy of this form).

5. **Change in Entity Status** (from status indicated above)

❑ a. Applicant claims SMALL ENTITY status. See 37 CFR 1.27.

❑ b. Applicant is not claiming SMALL ENTITY status. See, e.g., 37 CFR 1.27(g)(2).

The Director of the USPTO is requested to apply the Issue Fee and Publication Fee (if any) or to re-apply any previously paid issue fee to the application identified above.

NOTE: The Issue Fee and Publication Fee (if required) will not be accepted from anyone other than the applicant; a registered attorney or agent; or the assignee or other party in interest as shown by the records of the United States Patent and Trademark Office.

(Authorized Signature) (Date)

This collection of information is required by 37 CFR 1.311. The information is required to obtain or retain a benefit by the public which is to file (and by the USPTO to process) an application. Confidentiality is governed by 35 U.S.C. 122 and 37 CFR 1.14. This collection is estimated to take 12 minutes to complete, including gathering, preparing, and submitting the completed application form to the USPTO. Time will vary depending upon the individual case. Any comments on the amount of time you require to complete this form and/or suggestions for reducing this burden, should be sent to the Chief Information Officer, U.S. Patent and Trademark Office, U.S. Department of Commerce, P.O. Box 1450, Alexandria, Virginia 22313-1450. DO NOT SEND FEES OR COMPLETED FORMS TO THIS ADDRESS. SEND TO: Commissioner for Patents, P.O. Box 1450, Alexandria, Virginia 22313-1450.

Under the Paperwork Reduction Act of 1995, no persons are required to respond to a collection of information unless it displays a valid OMB control number.

TRANSMIT THIS FORM WITH FEE(S)

UNITED STATES PATENT AND TRADEMARK OFFICE

UNITED STATES DEPARTMENT OF COMMERCE
United States Patent and Trademark Office
Address: COMMISSIONER FOR PATENTS
P.O. Box 1450
Alexandria, Virginia 22313-1450
www.uspto.gov

APPLICATION NO.	FILING DATE	FIRST NAMED INVENTOR	ATTORNEY DOCKET NO.	CONFIRMATION NO.
10/798,606	03/11/2004	Michael J. Schuster	1008-100500	6196

7590 07/21/2004

Michael J. D'Aurelio
D'Aurelio & Mathews, LLC
96 Church Street
Chagrin Falls, OH 44022

EXAMINER
WALTON, GEORGE L

ART UNIT	PAPER NUMBER
3753	

DATE MAILED: 07/21/2004

Determination of Patent Term Adjustment under 35 U.S.C. 154 (b)
(application filed on or after May 29, 2000)

The Patent Term Adjustment to date is 0 day(s). If the issue fee is paid on the date that is three months after the mailing date of this notice and the patent issues on the Tuesday before the date that is 28 weeks (six and a half months) after the mailing date of this notice, the Patent Term Adjustment will be 0 day(s).

If a Continued Prosecution Application (CPA) was filed in the above-identified application, the filing date that determines Patent Term Adjustment is the filing date of the most recent CPA.

Applicant will be able to obtain more detailed information by accessing the Patent Application Information Retrieval (PAIR) WEB site (http://pair.uspto.gov).

Any questions regarding the Patent Term Extension or Adjustment determination should be directed to the Office of Patent Legal Administration at (703) 305-1383. Questions relating to issue and publication fee payments should be directed to the Customer Service Center of the Office of Patent Publication at (703) 305-8283.

PTOL-85 (Rev. 07/04) Approved for use through 04/30/2007.

Notice of Allowability	Application No.	Applicant(s)
	10/798,606	SCHUSTER, MICHAEL J.
	Examiner	Art Unit
	George L. Walton	3753

-- The MAILING DATE of this communication appears on the cover sheet with the correspondence address--

All claims being allowable, PROSECUTION ON THE MERITS IS (OR REMAINS) CLOSED in this application. If not included herewith (or previously mailed), a Notice of Allowance (PTOL-85) or other appropriate communication will be mailed in due course. **THIS NOTICE OF ALLOWABILITY IS NOT A GRANT OF PATENT RIGHTS.** This application is subject to withdrawal from issue at the initiative of the Office or upon petition by the applicant. See 37 CFR 1.313 and MPEP 1308.

1. ☒ This communication is responsive to *the interview summary and the examiner's amendment*.

2. ☒ The allowed claim(s) is/are *1-10*.

3. ☒ The drawings filed on *11 March 2004* are accepted by the Examiner.

4. ☐ Acknowledgment is made of a claim for foreign priority under 35 U.S.C. § 119(a)-(d) or (f).
   a) ☐ All b) ☐ Some* c) ☐ None of the:
      1. ☐ Certified copies of the priority documents have been received.
      2. ☐ Certified copies of the priority documents have been received in Application No. _____ .
      3. ☐ Copies of the certified copies of the priority documents have been received in this national stage application from the International Bureau (PCT Rule 17.2(a)).

   * Certified copies not received: _____.

Applicant has THREE MONTHS FROM THE "MAILING DATE" of this communication to file a reply complying with the requirements noted below. Failure to timely comply will result in ABANDONMENT of this application.
THIS THREE-MONTH PERIOD IS NOT EXTENDABLE.

5. ☐ A SUBSTITUTE OATH OR DECLARATION must be submitted. Note the attached EXAMINER'S AMENDMENT or NOTICE OF INFORMAL PATENT APPLICATION (PTO-152) which gives reason(s) why the oath or declaration is deficient.

6. ☐ CORRECTED DRAWINGS (as "replacement sheets") must be submitted.
   (a) ☐ including changes required by the Notice of Draftsperson's Patent Drawing Review (PTO-948) attached
      1) ☐ hereto or 2) ☐ to Paper No./Mail Date _____.
   (b) ☐ including changes required by the attached Examiner's Amendment / Comment or in the Office action of Paper No./Mail Date _____.

   Identifying indicia such as the application number (see 37 CFR 1.84(c)) should be written on the drawings in the front (not the back) of each sheet. Replacement sheet(s) should be labeled as such in the header according to 37 CFR 1.121(d).

7. ☐ DEPOSIT OF and/or INFORMATION about the deposit of BIOLOGICAL MATERIAL must be submitted. Note the attached Examiner's comment regarding REQUIREMENT FOR THE DEPOSIT OF BIOLOGICAL MATERIAL.

Attachment(s)

1. ☐ Notice of References Cited (PTO-892)
2. ☐ Notice of Draftperson's Patent Drawing Review (PTO-948)
3. ☐ Information Disclosure Statements (PTO-1449 or PTO/SB/08), Paper No./Mail Date _____
4. ☐ Examiner's Comment Regarding Requirement for Deposit of Biological Material
5. ☐ Notice of Informal Patent Application (PTO-152)
6. ☒ Interview Summary (PTO-413), Paper No./Mail Date *6/15/04* .
7. ☒ Examiner's Amendment/Comment
8. ☐ Examiner's Statement of Reasons for Allowance
9. ☐ Other _____.

Fluidmaster, Inc. - EX1012, Page 018
IPR2024-00633 (Fluidmaster Inc v. Danco Inc)

EXAMINER'S AMENDMENT

An examiner's amendment to the record appears below. Should the changes and/or additions be unacceptable to applicant, an amendment may be filed as provided by 37 CFR 1.312. To ensure consideration of such an amendment, it MUST be submitted no later than the payment of the issue fee.

Authorization for this examiner's amendment was given in a telephone interview with Mr. Michael J. D'Aurelio on July 15, 2004.

The application has been amended as follows:

1. (Currently Amended) A toilet fill valve, comprising:

a water inlet;

a first water outlet configured to supply water to a toilet tank; and

a bowl fill valve having a bowl fill valve inlet and a bowl fill valve outlet, the bowl fill valve inlet being operatively coupled to the water inlet, the bowl fill valve being integrally molded ~~integrated~~ with and radially extending from a portion of a body of the toilet fill valve, and the bowl fill valve being configured to supply an adjustable flow of water out the bowl fill outlet for filling a toilet bowl during a flush cycle of a toilet.

2. (Currently Amended) The toilet fill valve of claim 1, further comprising:

an actuating arm coupled to a float, the actuating arm extending in an orthogonal direction relative to a longitudinal axis of the toilet fill valve; and

the bowl fill valve extending in an orthogonal direction relative to the longitudinal axis of the toilet fill valve, wherein the actuating arm is angularly ~~radially~~ offset relative to the bowl fill valve, thereby preventing an interference with the bowl fill valve and a translational stem extending from the float to a free end of the actuating arm.

3. (Original) The toilet fill valve of claim 1, wherein the bowl fill valve further comprises a number of biased positions.

4. (Original) The toilet fill valve of claim 1, wherein the bowl fill valve is a type of valve selected from the group consisting of a ball valve, a gate valve, a globe valve, a plug valve, a diaphragm valve, a butterfly valve, a needle valve, a sliding gate, a quick turn valve, and a knife valve.

5. (Original) The toilet fill valve of claim 1, wherein the bowl fill valve is a ball valve.

6. (Original) The toilet fill valve of claim 1, wherein the bowl fill valve is a butterfly valve.

7. (Original) The toilet fill valve of claim 1, wherein the bowl fill valve is a needle valve

8. (Currently Amended) A toilet tank with an adjustable bowl fill water flow, comprising:

a toilet fill valve having a water inlet coupled to a water source outside of the toilet tank and a water outlet directing an flow of water into the toilet tank;

a bowl fill valve having a bowl fill valve inlet and a bowl fill valve outlet, the bowl fill valve inlet being operatively coupled to the water inlet, the bowl fill valve being integrally molded ~~integrated~~ with and radially extending from a portion of a body of the toilet fill valve;

a tube coupling the bowl fill valve outlet to an overflow tube of the toilet tank, wherein a flow of water into the overflow tube is directed to a toilet bowl; and

the bowl fill valve being configured to supply an adjustable flow of water out the bowl fill outlet through the tube and into the overflow tube for filling the toilet bowl during a flush cycle of a toilet, the bowl fill valve preventing a creation of a pressure head in the tube.

9. (Currently Amended) A method for adjusting a bowl fill water flow during a flush cycle in a toilet, comprising the steps of:

determining a water level in a toilet bowl when the toilet bowl is full of water;

adjusting a bowl fill valve integrally molded ~~integrated~~ with and radially extending from a portion of a toilet fill valve in the toilet to a predefined position, thereby adjusting a flow of water that refills the toilet;

flushing the toilet;

determining if the flow of water into the toilet bowl is adequate to refill the toilet bowl during the flush cycle; and

repeating the steps of adjusting the bowl fill valve, flushing the toilet, and determining if the flow of water into the bowl is adequate to refill the toilet bowl until the toilet bowl is substantially filled during a flush cycle.

10. (Currently Amended) The toilet fill valve of claim 9, further comprising preventing a creation of a pressure head in a tube that is coupled between an outlet of the bowl fill valve and an overflow tube in the toilet by adjusting the bowl fill valve ~~integrated with the toilet fill valve~~.

Please make the following proposed corrections in the specification:

[0014] Referring next to FIG. 2, shown is a top view of the toilet fill valve 100 according to an embodiment of the present invention. In this respect, the actuating arm 129 of the bowl fill valve 100 is seen with respect to the bowl fill valve 109. The actuating arm 129 is coupled to the float by way of the translational stem 126 (FIG. 1). In this respect, the actuating arm 129 extends in an orthogonal direction relative to a longitudinal axis 133 of the toilet fill valve 100. The longitudinal axis 133 is centered in the toilet fill valve 100 along the length of the toilet fill valve 100. Also, the bowl fill valve 109 extends in an orthogonal direction relative to the longitudinal axis 133 of the toilet fill valve 100. In order to prevent interference between the bowl fill valve 109 and the translational stem 126 or the actuating arm 129, the actuating arm 129 is angularly ~~radially~~ offset relative to the bowl fill valve 109 as shown. In this respect, the translational stem 126 is coupled to the free end of the actuating arm 129. By virtue of the angular ~~radial~~ offset between the bowl fill valve 109 and the actuating arm 129, the operation of the bowl fill valve 109 does not interfere with the operation of the toilet fill valve 100 itself by virtue of the fact that the float 123 (FIG. 1) can move freely with the

movement of the translational stem 126 in order for proper operation of the toilet fill valve 100.

Conclusion

Any inquiry concerning this communication or earlier communications from the examiner should be directed to George L. Walton whose telephone number is 703-308-2596. The examiner can normally be reached on M-F, 8:00-4:30.

If attempts to reach the examiner by telephone are unsuccessful, the examiner's supervisor, Dave Scherbel can be reached on 703-308-1272. The fax phone number for the organization where this application or proceeding is assigned is 703-872-9306.

Information regarding the status of an application may be obtained from the Patent Application Information Retrieval (PAIR) system. Status information for published applications may be obtained from either Private PAIR or Public PAIR. Status information for unpublished applications is available through Private PAIR only. For more information about the PAIR system, see http://pair-direct.uspto.gov. Should you have questions on access to the Private PAIR system, contact the Electronic Business Center (EBC) at 866-217-9197 (toll-free).

George L. Walton
Primary Examiner
Art Unit 3753

GLW

Interview Summary	Application No.	Applicant(s)	
	10/798,606	SCHUSTER, MICHAEL J.	
	Examiner	Art Unit	
	George L. Walton	3753	

All participants (applicant, applicant's representative, PTO personnel):

(1) *Mr. Michael J. D'Aurelio - attorney*. (3)_____.

(2) *Mr. George L. Walton - examiner*. (4)_____.

Date of Interview: *15 June 2004*.

Type: a)☒ Telephonic b)☐ Video Conference
c)☐ Personal [copy given to: 1)☐ applicant 2)☐ applicant's representative]

Exhibit shown or demonstration conducted: d)☐ Yes e)☒ No.
If Yes, brief description: _____.

Claim(s) discussed: *1,8 and 9*.

Identification of prior art discussed: *Stemples, Swanberg, Clemmons, DeMarco and Horad*.

Agreement with respect to the claims f)☒ was reached. g)☐ was not reached. h)☐ N/A.

Substance of Interview including description of the general nature of what was agreed to if an agreement was reached, or any other comments: *In view of the above prior art, changes were proposed and incorporated into the above discussed claims to more clearly define the claimed invention and prevail over the above prior art. These changes properly place this application in condition for allowance. Details of the above changes can be seen in the accompanying "Examiner's Amendment". No response is necessary for this communication.*.

(A fuller description, if necessary, and a copy of the amendments which the examiner agreed would render the claims allowable, if available, must be attached. Also, where no copy of the amendments that would render the claims allowable is available, a summary thereof must be attached.)

THE FORMAL WRITTEN REPLY TO THE LAST OFFICE ACTION MUST INCLUDE THE SUBSTANCE OF THE INTERVIEW. (See MPEP Section 713.04). If a reply to the last Office action has already been filed, APPLICANT IS GIVEN ONE MONTH FROM THIS INTERVIEW DATE, OR THE MAILING DATE OF THIS INTERVIEW SUMMARY FORM, WHICHEVER IS LATER, TO FILE A STATEMENT OF THE SUBSTANCE OF THE INTERVIEW. See Summary of Record of Interview requirements on reverse side or on attached sheet.

Examiner Note: You must sign this form unless it is an Attachment to a signed Office action.

_____
Examiner's signature, if required

Fluidmaster, Inc. - EX1012, Page 023
IPR2024-00633 (Fluidmaster Inc v. Danco Inc)

Summary of Record of Interview Requirements

Manual of Patent Examining Procedure (MPEP), Section 713.04, Substance of Interview Must be Made of Record
A complete written statement as to the substance of any face-to-face, video conference, or telephone interview with regard to an application must be made of record in the application whether or not an agreement with the examiner was reached at the interview.

Title 37 Code of Federal Regulations (CFR) § 1.133 Interviews
Paragraph (b)
In every instance where reconsideration is requested in view of an interview with an examiner, a complete written statement of the reasons presented at the interview as warranting favorable action must be filed by the applicant. An interview does not remove the necessity for reply to Office action as specified in §§ 1.111, 1.135. (35 U.S.C. 132)

37 CFR §1.2 Business to be transacted in writing.
All business with the Patent or Trademark Office should be transacted in writing. The personal attendance of applicants or their attorneys or agents at the Patent and Trademark Office is unnecessary. The action of the Patent and Trademark Office will be based exclusively on the written record in the Office. No attention will be paid to any alleged oral promise, stipulation, or understanding in relation to which there is disagreement or doubt.

The action of the Patent and Trademark Office cannot be based exclusively on the written record in the Office if that record is itself incomplete through the failure to record the substance of interviews.

It is the responsibility of the applicant or the attorney or agent to make the substance of an interview of record in the application file, unless the examiner indicates he or she will do so. It is the examiner's responsibility to see that such a record is made and to correct material inaccuracies which bear directly on the question of patentability.

Examiners must complete an Interview Summary Form for each interview held where a matter of substance has been discussed during the interview by checking the appropriate boxes and filling in the blanks. Discussions regarding only procedural matters, directed solely to restriction requirements for which interview recordation is otherwise provided for in Section 812.01 of the Manual of Patent Examining Procedure, or pointing out typographical errors or unreadable script in Office actions or the like, are excluded from the interview recordation procedures below. Where the substance of an interview is completely recorded in an Examiners Amendment, no separate Interview Summary Record is required.

The Interview Summary Form shall be given an appropriate Paper No., placed in the right hand portion of the file, and listed on the "Contents" section of the file wrapper. In a personal interview, a duplicate of the Form is given to the applicant (or attorney or agent) at the conclusion of the interview. In the case of a telephone or video-conference interview, the copy is mailed to the applicant's correspondence address either with or prior to the next official communication. If additional correspondence from the examiner is not likely before an allowance or if other circumstances dictate, the Form should be mailed promptly after the interview rather than with the next official communication.

The Form provides for recordation of the following information:
- Application Number (Series Code and Serial Number)
- Name of applicant
- Name of examiner
- Date of interview
- Type of interview (telephonic, video-conference, or personal)
- Name of participant(s) (applicant, attorney or agent, examiner, other PTO personnel, etc.)
- An indication whether or not an exhibit was shown or a demonstration conducted
- An identification of the specific prior art discussed
- An indication whether an agreement was reached and if so, a description of the general nature of the agreement (may be by attachment of a copy of amendments or claims agreed as being allowable). Note: Agreement as to allowability is tentative and does not restrict further action by the examiner to the contrary.
- The signature of the examiner who conducted the interview (if Form is not an attachment to a signed Office action)

It is desirable that the examiner orally remind the applicant of his or her obligation to record the substance of the interview of each case. It should be noted, however, that the Interview Summary Form will not normally be considered a complete and proper recordation of the interview unless it includes, or is supplemented by the applicant or the examiner to include, all of the applicable items required below concerning the substance of the interview.

A complete and proper recordation of the substance of any interview should include at least the following applicable items:
1) A brief description of the nature of any exhibit shown or any demonstration conducted,
2) an identification of the claims discussed,
3) an identification of the specific prior art discussed,
4) an identification of the principal proposed amendments of a substantive nature discussed, unless these are already described on the Interview Summary Form completed by the Examiner,
5) a brief identification of the general thrust of the principal arguments presented to the examiner,
   (The identification of arguments need not be lengthy or elaborate. A verbatim or highly detailed description of the arguments is not required. The identification of the arguments is sufficient if the general nature or thrust of the principal arguments made to the examiner can be understood in the context of the application file. Of course, the applicant may desire to emphasize and fully describe those arguments which he or she feels were or might be persuasive to the examiner.)
6) a general indication of any other pertinent matters discussed, and
7) if appropriate, the general results or outcome of the interview unless already described in the Interview Summary Form completed by the examiner.

Examiners are expected to carefully review the applicant's record of the substance of an interview. If the record is not complete and accurate, the examiner will give the applicant an extendable one month time period to correct the record.

Examiner to Check for Accuracy

If the claims are allowable for other reasons of record, the examiner should send a letter setting forth the examiner's version of the statement attributed to him or her. If the record is complete and accurate, the examiner should place the indication, "Interview Record OK" on the paper recording the substance of the interview along with the date and the examiner's initials.

Issue Classification	Application No.	Applicant(s)	
	10/798,606	SCHUSTER, MICHAEL J.	
	Examiner	Art Unit	
	George L. Walton	3753	

ISSUE CLASSIFICATION

ORIGINAL						CROSS REFERENCE(S)						
CLASS				SUBCLASS	CLASS	SUBCLASS (ONE SUBCLASS PER BLOCK)						
137				441	4	324	415					
INTERNATIONAL CLASSIFICATION					137	15.26	436	437				
E	0	3	D	1/32								
E	0	3	D	1/33								
F	1	6	K	21/18								
F	1	6	K	31/24								
				/								

---------- (Assistant Examiner) (Date)	George L. Walton Primary Patent Examiner Art Unit - 3753 7/16/2004 (Primary Examiner) (Date)	Total Claims Allowed: 10
L Dyer 7/20 (Legal Instruments Examiner) (Date)		O.G. Print Claim(s): 8 O.G. Print Fig.: 3

☒ Claims renumbered in the same order as presented by applicant ☐ CPA ☐ T.D. ☐ R.1.47

Final	Original	Final	Original	Final	Original	Final	Original	Final	Original	Final	Original
1	1		31		61		91		121		151		181
2	2		32		62		92		122		152		182
3	3		33		63		93		123		153		183
4	4		34		64		94		124		154		184
5	5		35		65		95		125		155		185
6	6		36		66		96		126		156		186
7	7		37		67		97		127		157		187
8	8		38		68		98		128		158		188
9	9		39		69		99		129		159		189
10	10		40		70		100		130		160		190
	11		41		71		101		131		161		191
	12		42		72		102		132		162		192
	13		43		73		103		133		163		193
	14		44		74		104		134		164		194
	15		45		75		105		135		165		195
	16		46		76		106		136		166		196
	17		47		77		107		137		167		197
	18		48		78		108		138		168		198
	19		49		79		109		139		169		199
	20		50		80		110		140		170		200
	21		51		81		111		141		171		201
	22		52		82		112		142		172		202
	23		53		83		113		143		173		203
	24		54		84		114		144		174		204
	25		55		85		115		145		175		205
	26		56		86		116		146		176		206
	27		57		87		117		147		177		207
	28		58		88		118		148		178		208
	29		59		89		119		149		179		209
	30		60		90		120		150		180		210

Search Notes	Application No.	Applicant(s)	
	10/798,606	SCHUSTER, MICHAEL J.	
	Examiner	Art Unit	
	George L. Walton	3753	

SEARCHED			
Class	Subclass	Date	Examiner
137	15.26 432 436 437	7/16/2004	GLW
4	331	7/16/2004	GLW

INTERFERENCE SEARCHED			
Class	Subclass	Date	Examiner
4	**324** **415**	**7/16/2004**	**GLW**
137	15.26 436	7/16/2004	GLW
137	437 441	7/16/2004	GLW

SEARCH NOTES (INCLUDING SEARCH STRATEGY)		
	DATE	EXMR
Inquiries-None	7/16/2004	GLW

Index of Claims

Application No.	Applicant(s)
10/798,606	SCHUSTER, MICHAEL J.
Examiner	**Art Unit**
George L. Walton	3753

√	Rejected	–	(Through numeral) Cancelled	N	Non-Elected	A	Appeal
=	Allowed	÷	Restricted	I	Interference	O	Objected

Claim Final	Claim Original	Date 7/16/04								
1	1	=								
2	2	=								
3	3	=								
4	4	=								
5	5	=								
6	6	=								
7	7	=								
8	8	=								
9	9	=								
10	10	=								
	11									
	12									
	13									
	14									
	15									
	16									
	17									
	18									
	19									
	20									
	21									
	22									
	23									
	24									
	25									
	26									
	27									
	28									
	29									
	30									
	31									
	32									
	33									
	34									
	35									
	36									
	37									
	38									
	39									
	40									
	41									
	42									
	43									
	44									
	45									
	46									
	47									
	48									
	49									
	50									

Claim Final	Claim Original	Date								
	51									
	52									
	53									
	54									
	55									
	56									
	57									
	58									
	59									
	60									
	61									
	62									
	63									
	64									
	65									
	66									
	67									
	68									
	69									
	70									
	71									
	72									
	73									
	74									
	75									
	76									
	77									
	78									
	79									
	80									
	81									
	82									
	83									
	84									
	85									
	86									
	87									
	88									
	89									
	90									
	91									
	92									
	93									
	94									
	95									
	96									
	97									
	98									
	99									
	100									

Claim Final	Claim Original	Date								
	101									
	102									
	103									
	104									
	105									
	106									
	107									
	108									
	109									
	110									
	111									
	112									
	113									
	114									
	115									
	116									
	117									
	118									
	119									
	120									
	121									
	122									
	123									
	124									
	125									
	126									
	127									
	128									
	129									
	130									
	131									
	132									
	133									
	134									
	135									
	136									
	137									
	138									
	139									
	140									
	141									
	142									
	143									
	144									
	145									
	146									
	147									
	148									
	149									
	150									

UNITED STATES PATENT AND TRADEMARK OFFICE

UNITED STATES DEPARTMENT OF COMMERCE
United States Patent and Trademark Office
Address: COMMISSIONER FOR PATENTS
P.O. Box 1450
Alexandria, Virginia 22313-1450
www.uspto.gov

APPLICATION NO.	FILING DATE	FIRST NAMED INVENTOR	ATTORNEY DOCKET NO.	CONFIRMATION NO.
10/798,606	03/11/2004	Michael J. Schuster	1008-100500	6196

7590 06/18/2004

Michael J. D'Aurelio
D'Aurelio & Mathews, LLC
96 Church Street
Chagrin Falls, OH 44022

EXAMINER
WALTON, GEORGE L

ART UNIT	PAPER NUMBER
3753	

DATE MAILED: 06/18/2004

Please find below and/or attached an Office communication concerning this application or proceeding.

PTO-90C (Rev. 10/03)

Office Action Summary	Application No.	Applicant(s)
	10/798,606	SCHUSTER, MICHAEL J.
	Examiner	Art Unit
	George L. Walton	3753

-- The MAILING DATE of this communication appears on the cover sheet with the correspondence address --

Period for Reply

A SHORTENED STATUTORY PERIOD FOR REPLY IS SET TO EXPIRE 3 MONTH(S) FROM THE MAILING DATE OF THIS COMMUNICATION.

- Extensions of time may be available under the provisions of 37 CFR 1.136(a). In no event, however, may a reply be timely filed after SIX (6) MONTHS from the mailing date of this communication.
- If the period for reply specified above is less than thirty (30) days, a reply within the statutory minimum of thirty (30) days will be considered timely.
- If NO period for reply is specified above, the maximum statutory period will apply and will expire SIX (6) MONTHS from the mailing date of this communication.
- Failure to reply within the set or extended period for reply will, by statute, cause the application to become ABANDONED (35 U.S.C. § 133). Any reply received by the Office later than three months after the mailing date of this communication, even if timely filed, may reduce any earned patent term adjustment. See 37 CFR 1.704(b).

Status

1)☐ Responsive to communication(s) filed on _____.

2a)☐ This action is **FINAL**. 2b)☒ This action is non-final.

3)☐ Since this application is in condition for allowance except for formal matters, prosecution as to the merits is closed in accordance with the practice under *Ex parte Quayle*, 1935 C.D. 11, 453 O.G. 213.

Disposition of Claims

4)☒ Claim(s) 1-10 is/are pending in the application.

4a) Of the above claim(s) _____ is/are withdrawn from consideration.

5)☐ Claim(s) _____ is/are allowed.

6)☒ Claim(s) 1-10 is/are rejected.

7)☐ Claim(s) _____ is/are objected to.

8)☐ Claim(s) _____ are subject to restriction and/or election requirement.

Application Papers

9)☐ The specification is objected to by the Examiner.

10)☐ The drawing(s) filed on _____ is/are: a)☐ accepted or b)☐ objected to by the Examiner.

Applicant may not request that any objection to the drawing(s) be held in abeyance. See 37 CFR 1.85(a).

Replacement drawing sheet(s) including the correction is required if the drawing(s) is objected to. See 37 CFR 1.121(d).

11)☐ The oath or declaration is objected to by the Examiner. Note the attached Office Action or form PTO-152.

Priority under 35 U.S.C. § 119

12)☐ Acknowledgment is made of a claim for foreign priority under 35 U.S.C. § 119(a)-(d) or (f).

a)☐ All b)☐ Some * c)☐ None of:

1.☐ Certified copies of the priority documents have been received.

2.☐ Certified copies of the priority documents have been received in Application No. _____.

3.☐ Copies of the certified copies of the priority documents have been received in this National Stage application from the International Bureau (PCT Rule 17.2(a)).

* See the attached detailed Office action for a list of the certified copies not received.

Attachment(s)

1) ☒ Notice of References Cited (PTO-892)

2) ☐ Notice of Draftsperson's Patent Drawing Review (PTO-948)

3) ☒ Information Disclosure Statement(s) (PTO-1449 or PTO/SB/08) Paper No(s)/Mail Date 6/16/04.

4) ☐ Interview Summary (PTO-413) Paper No(s)/Mail Date. _____ .

5) ☐ Notice of Informal Patent Application (PTO-152)

6) ☐ Other: _____.

DETAILED ACTION

Claim Rejections - 35 USC § 102

The following is a quotation of the appropriate paragraphs of 35 U.S.C. 102 that form the basis for the rejections under this section made in this Office action:

> A person shall be entitled to a patent unless –
>
> (b) the invention was patented or described in a printed publication in this or a foreign country or in public use or on sale in this country, more than one year prior to the date of application for patent in the United States.

Claims 1-4, 7, 9 and 10 are rejected under 35 U.S.C. 102(b) as being anticipated by either one of Swanberg or Clemmons. In the patent to Swanberg the adjustable and integrated bowl fill valve is readable on needle valve element 60. The threaded element 50 and the mating threads 49 along with elements 51-56 determine the biased positions of the needle valve 60. It is inherent that the adjustable needle valve 29 will prevent the creation of a pressure head in the refill tube 66. In the patent to Clemmons, the adjustable and integrated bowl fill valve is readable on needle valve element 29. The threads 28 and the mating threads of the valve 29 determine the biased positions of the needle valve. It is inherent that the adjustable needle valve 29 will prevent the creation of a pressure head in the refill tube 25.

Claim Rejections - 35 USC § 103

The following is a quotation of 35 U.S.C. 103(a) which forms the basis for all obviousness rejections set forth in this Office action:

> (a) A patent may not be obtained though the invention is not identically disclosed or described as set forth in section 102 of this title, if the differences between the subject matter sought to be patented and the prior art are such that the subject matter as a whole would have been obvious at the time the invention was made to a person having ordinary skill in the art to which said subject matter pertains. Patentability shall not be negatived by the manner in which the invention was made.

The factual inquiries set forth in *Graham* v. *John Deere Co.*, 383 U.S. 1, 148 USPQ 459 (1966), that are applied for establishing a background for determining obviousness under 35 U.S.C. 103(a) are summarized as follows:

1. Determining the scope and contents of the prior art.
2. Ascertaining the differences between the prior art and the claims at issue.
3. Resolving the level of ordinary skill in the pertinent art.
4. Considering objective evidence present in the application indicating obviousness or nonobviousness.

Claims 1-10 are rejected under 35 U.S.C. 103(a) as being unpatentable over either one of Stemples, DeMarco or Horad in view of either one of Swanberg or Clemmons. The above claims are readable on either one of Stemples, DeMarco or Horad with the exceptions of having a) an integrated bowl fill valve with the toilet valve housing and being offset from the float arm and b) having a specific type of bow fill valve member, such as a needle valve. The patent to either one of Swanberg or Clemmons teaches the above exceptions. In view of the teaching of Swanberg or Clemmons, it would be obvious to one of ordinary skill in the art, at the time the invention was made to modify rotary valve 22 of Stemples, plug valve 36 of DeMarco or spherical or ball valve 20 of Horad as taught by elements 28-30 of Clemmons or elements 49-57 60-61 and 63, if desired. The other types of bowl fill valves are merely obvious design expedients in view of the above teachings. Note that each adjustable valve will prevent the creation of a pressure head in either refill tube 39 of Stemples, refill tube 22 of DeMarco or refill tube 22 of Hoard. Such teachings provide no unobvious or unexpected result.

Conclusion

The prior art made of record and not relied upon is considered pertinent to applicant's disclosure.

Any inquiry concerning this communication or earlier communications from the examiner should be directed to George L. Walton whose telephone number is 703-308-2596. The examiner can normally be reached on M-F, 8:00-4:30.

If attempts to reach the examiner by telephone are unsuccessful, the examiner's supervisor, Dave Scherbel can be reached on 703-308-1272. The fax phone number for the organization where this application or proceeding is assigned is 703-872-9306.

Information regarding the status of an application may be obtained from the Patent Application Information Retrieval (PAIR) system. Status information for published applications may be obtained from either Private PAIR or Public PAIR. Status information for unpublished applications is available through Private PAIR only. For more information about the PAIR system, see http://pair-direct.uspto.gov. Should you have questions on access to the Private PAIR system, contact the Electronic Business Center (EBC) at 866-217-9197 (toll-free).

George L. Walton
Primary Examiner
Art Unit 3753

GLW

PTO/SB/08A (04-03)
Approved for use through 04/30/2003. OMB 0651-0031
U.S. Patent and Trademark Office; U.S. DEPARTMENT OF COMMERCE
Under the Paperwork Reduction Act of 1995, no persons are required to respond to a collection of information unless it contains a valid OMB control number.

Substitute for form 1449/PTO

INFORMATION DISCLOSURE STATEMENT BY APPLICANT

(Use as many sheets as necessary)

Sheet 1 of 2

Complete if Known	
Application Number	10/798606
Filing Date	~~Herewith~~ 3/11/04
First Named Inventor	Michael J. Schuster
Art Unit	3753
Examiner Name	George L. Walton
Attorney Docket Number	1008-100500

U. S. PATENT DOCUMENTS

Examiner Initials*	Cite No.[1]	Document Number Number-Kind Code[2] (if known)	Publication Date MM-DD-YYYY	Name of Patentee or Applicant of Cited Document	Pages, Columns, Lines, Where Relevant Passages or Relevant Figures Appear
GW		US- 2002/0092090 A1	07-18-2002	Johnson	
		US- 2002/0162166 A1	11-07-2002	Saar et al.	
		US- 3,986,216	10-19-1976	Davis et al.	
		US- 3,994,628	11-30-1976	Kemper	
		US- 4,007,498	02-15-1977	Pearson	
		US- 4,017,916	04-19-1977	Pearson	
		US- 4,032,822	06-28-1977	Un	
		US- 4,090,532	05-23-1978	Story, Jr.	
		US- 4,145,775	03-27-1979	Butler	
		US- 4,392,260	07-12-1983	Bensen	
		US- 4,707,867	11-24-1987	Kawabe et al.	
		US- 4,764,996	08-23-1988	Pino	
		US- 4,793,588	12-27-1988	Laverty, Jr.	
		US- 4,918,764	04-24-1990	Haselswerdt et al.	
		US- 4,980,932	01-01-1991	Stemples	
		US- 5,007,452	04-16-1991	Antunez	
		US- 5,036,553	08-06-1991	Sanderson	
		US- 5,052,060	10-01-1991	Makita et al.	
GW		US- 5,134,729	08-04-1992	Shaw	

FOREIGN PATENT DOCUMENTS

Examiner Initials*	Cite No.[1]	Foreign Patent Document Country Code[3] Number[4] Kind Code[5] (if known)	Publication Date MM-DD-YYYY	Name of Patentee or Applicant of Cited Document	Pages, Columns, Lines, Where Relevant Passages Or Relevant Figures Appear	T[6]

Examiner Signature	George Walton	Date Considered	6/15/04

*EXAMINER: Initial if reference considered, whether or not citation is in conformance with MPEP 609. Draw line through citation if not in conformance and not considered. Include copy of this form with next communication to applicant. [1] Applicant's unique citation designation number (optional). [2] See Kinds Codes of USPTO Patent Documents at www.uspto.gov or MPEP 901.04. [3] Enter Office that issued the document, by the two-letter code (WIPO Standard ST.3). [4] For Japanese patent documents, the indication of the year of the reign of the Emperor must precede the serial number of the patent document. [5] Kind of document by the appropriate symbols as indicated on the document under WIPO Standard ST. 16 if possible. [6] Applicant is to place a check mark here if English language Translation is attached.

This collection of information is required by 37 CFR 1.97 and 1.98. The information is required to obtain or retain a benefit by the public which is to file (and by the USPTO to process) an application. Confidentiality is governed by 35 U.S.C. 122 and 37 CFR 1.14. This collection is estimated to take 2 hours to complete, including gathering, preparing, and submitting the completed application form to the USPTO. Time will vary depending upon the individual case. Any comments on the amount of time you require to complete this form and/or suggestions for reducing this burden, should be sent to the Chief Information Officer, U.S. Patent and Trademark Office, U.S. Department of Commerce, Washington, DC 20231. DO NOT SEND FEES OR COMPLETED FORMS TO THIS ADDRESS. SEND TO: **Commissioner for Patents, Washington, DC 20231.**

If you need assistance in completing the form, call 1-800-PTO-9199 (1-800-786-9199) and select option 2.

PTO/SB/08A (04-03)
Approved for use through 04/30/2003. OMB 0651-0031
U.S. Patent and Trademark Office; U.S. DEPARTMENT OF COMMERCE
Under the Paperwork Reduction Act of 1995, no persons are required to respond to a collection of information unless it contains a valid OMB control number.

Substitute for form 1449/PTO

INFORMATION DISCLOSURE STATEMENT BY APPLICANT

(Use as many sheets as necessary)

Sheet 2 of 2

Complete if Known	
Application Number	10/798,606
Filing Date	~~Herbwith~~ 3/11/04
First Named Inventor	Michael J. Schuster
Art Unit	3753
Examiner Name	George L. Walton
Attorney Docket Number	1008-100500

U. S. PATENT DOCUMENTS

Examiner Initials*	Cite No.[1]	Document Number Number-Kind Code[2] (if known)	Publication Date MM-DD-YYYY	Name of Patentee or Applicant of Cited Document	Pages, Columns, Lines, Where Relevant Passages or Relevant Figures Appear
GW		US- 5,245,710	09-21-1993	Haselswerdt et al.	—
		US- 5,362,026	11-08-1994	Kobayashi et al.	—
		US- 5,432,959	07-18-1995	Ellsworth et al.	—
		US- 5,469,586	11-28-1995	Tsutsui et al.	—
		US- 5,708,991	01-20-1998	DeMarco	—
		US- 5,715,860	02-10-1998	Horad	—
		US- 6,202,227 B1	03-20-2001	Gurowitz	—
		US- 6,209,576 B1	04-03-2001	Davis	—
		US- 6,263,519 B1	07-24-2001	Parsons et al.	—
		US- 6,560,790 B2	05-13-2003	Saar et al.	—
GW		US- 4,420,845	12-20-1983	Antunez	—
		US-			
		US-			
		US-			
		US-			
		US-			
		US-			
		US-			
		US-			

FOREIGN PATENT DOCUMENTS

Examiner Initials*	Cite No.[1]	Foreign Patent Document Country Code[3]-Number[4]-Kind Code[5] (if known)	Publication Date MM-DD-YYYY	Name of Patentee or Applicant of Cited Document	Pages, Columns, Lines, Where Relevant Passages Or Relevant Figures Appear	T[6]

Examiner Signature	George Walton	Date Considered	6/15/04

*EXAMINER: Initial if reference considered, whether or not citation is in conformance with MPEP 609. Draw line through citation if not in conformance and not considered. Include copy of this form with next communication to applicant. [1] Applicant's unique citation designation number (optional). [2] See Kinds Codes of USPTO Patent Documents at www.uspto.gov or MPEP 901.04. [3] Enter Office that issued the document, by the two-letter code (WIPO Standard ST.3). [4] For Japanese patent documents, the indication of the year of the reign of the Emperor must precede the serial number of the patent document. [5] Kind of document by the appropriate symbols as indicated on the document under WIPO Standard ST. 16 if possible. [6] Applicant is to place a check mark here if English language Translation is attached.

This collection of information is required by 37 CFR 1.97 and 1.98. The information is required to obtain or retain a benefit by the public which is to file (and by the USPTO to process) an application. Confidentiality is governed by 35 U.S.C. 122 and 37 CFR 1.14. This collection is estimated to take 2 hours to complete, including gathering, preparing, and submitting the completed application form to the USPTO. Time will vary depending upon the individual case. Any comments on the amount of time you require to complete this form and/or suggestions for reducing this burden, should be sent to the Chief Information Officer, U.S. Patent and Trademark Office, U.S. Department of Commerce, Washington, DC 20231. DO NOT SEND FEES OR COMPLETED FORMS TO THIS ADDRESS. SEND TO: **Commissioner for Patents, Washington, DC 20231.**

If you need assistance in completing the form, call 1-800-PTO-9199 (1-800-786-9199) and select option 2.

Notice of References Cited	Application/Control No. 10/798,606	Applicant(s)/Patent Under Reexamination SCHUSTER, MICHAEL J.	
	Examiner George L. Walton	Art Unit 3753	Page 1 of 1

U.S. PATENT DOCUMENTS

*		Document Number Country Code-Number-Kind Code	Date MM-YYYY	Name	Classification
	A	US-1,787,601	01-1931	SWANBERG SWAN T	137/441
	B	US-2,087,503	07-1937	CLEMMONS HERBERT D	137/441
	C	US-3,086,546	04-1963	HAROLD BROWN ERNEST	137/441
	D	US-3,172,128	03-1965	DUCEY JAMES A	137/444
	E	US-3,744,064	07-1973	Preston, Charles L.	4/325
	F	US-5,228,152	07-1993	Fraley, Florence D.	4/664
	G	US-6,219,856 B1	04-2001	Alles, Wilmer F.	4/415
	H	US-6,385,788 B1	05-2002	Wasielewski, Robert	4/415
	I	US-			
	J	US-			
	K	US-			
	L	US-			
	M	US-			

FOREIGN PATENT DOCUMENTS

*		Document Number Country Code-Number-Kind Code	Date MM-YYYY	Country	Name	Classification
	N					
	O					
	P					
	Q					
	R					
	S					
	T					

NON-PATENT DOCUMENTS

*		Include as applicable: Author, Title Date, Publisher, Edition or Volume, Pertinent Pages)
	U	
	V	
	W	
	X	

*A copy of this reference is not being furnished with this Office action. (See MPEP § 707.05(a).)
Dates in MM-YYYY format are publication dates. Classifications may be US or foreign.

Search Notes	Application No.	Applicant(s)	
	10/798,606	SCHUSTER, MICHAEL J.	
	Examiner	Art Unit	
	George L. Walton	3753	

SEARCHED			
Class	Subclass	Date	Examiner
4	324 366 415	6/15/2004	GLW
137	434 441	6/15/2004	GLW
137	442 443	6/15/2004	GLW
137	444	6/15/2004	GLW

INTERFERENCE SEARCHED			
Class	Subclass	Date	Examiner

SEARCH NOTES (INCLUDING SEARCH STRATEGY)		
	DATE	EXMR
Inquiries-None Electronic Search-Performed	6/15/2004	GLW

Index of Claims

Application No.	Applicant(s)
10/798,606	SCHUSTER, MICHAEL J.
Examiner	**Art Unit**
George L. Walton	3753

√	Rejected	–	(Through numeral) Cancelled	N	Non-Elected	A	Appeal
=	Allowed	+	Restricted	I	Interference	O	Objected

Claim		Date								
Final	Original	6/15/04								
	1	√								
	2	√								
	3	√								
	4	√								
	5	√								
	6	√								
	7	√								
	8	√								
	9	√								
	10	√								
	11									
	12									
	13									
	14									
	15									
	16									
	17									
	18									
	19									
	20									
	21									
	22									
	23									
	24									
	25									
	26									
	27									
	28									
	29									
	30									
	31									
	32									
	33									
	34									
	35									
	36									
	37									
	38									
	39									
	40									
	41									
	42									
	43									
	44									
	45									
	46									
	47									
	48									
	49									
	50									

Claim		Date								
Final	Original									
	51									
	52									
	53									
	54									
	55									
	56									
	57									
	58									
	59									
	60									
	61									
	62									
	63									
	64									
	65									
	66									
	67									
	68									
	69									
	70									
	71									
	72									
	73									
	74									
	75									
	76									
	77									
	78									
	79									
	80									
	81									
	82									
	83									
	84									
	85									
	86									
	87									
	88									
	89									
	90									
	91									
	92									
	93									
	94									
	95									
	96									
	97									
	98									
	99									
	100									

Claim		Date								
Final	Original									
	101									
	102									
	103									
	104									
	105									
	106									
	107									
	108									
	109									
	110									
	111									
	112									
	113									
	114									
	115									
	116									
	117									
	118									
	119									
	120									
	121									
	122									
	123									
	124									
	125									
	126									
	127									
	128									
	129									
	130									
	131									
	132									
	133									
	134									
	135									
	136									
	137									
	138									
	139									
	140									
	141									
	142									
	143									
	144									
	145									
	146									
	147									
	148									
	149									
	150									

L Number	Hits	Search Text	DB	Time stamp
1	563385	toilet adj float valve and (adjustable adj bowl fill valve)	USPAT; US-PGPUB	2004/06/15 10:27
2	94	(toilet adj float valve and (adjustable adj bowl fill valve)) and 137/441.ccls.	USPAT; US-PGPUB	2004/06/15 11:03
3	1	6385788.URPN.	USPAT	2004/06/15 10:28
4	1	6385788.URPN.	USPAT	2004/06/15 10:28
5	3	("4980932" | "5134729" | "5287565").PN.	USPAT	2004/06/15 10:28
6	3	("4980932" | "5134729" | "5287565").PN.	USPAT	2004/06/15 10:29
7	15	4980932.URPN.	USPAT	2004/06/15 10:29
8	15	4980932.URPN.	USPAT	2004/06/15 10:29
9	2	5715860.URPN.	USPAT	2004/06/15 10:30
10	10	("1787601" | "3086546" | "3172128" | "3744064" | "4145775" | "4429423" | "4764996" | "4980932" | "5452482" | "5524299").PN.	USPAT	2004/06/15 10:30
11	10	("1787601" | "3086546" | "3172128" | "3744064" | "4145775" | "4429423" | "4764996" | "4980932" | "5452482" | "5524299").PN.	USPAT	2004/06/15 10:30
12	18	4145775.URPN.	USPAT	2004/06/15 10:31
13	1	5708991.URPN.	USPAT	2004/06/15 10:32
14	10	("2087503" | "2183677" | "2934311" | "3086546" | "3542338" | "4145775" | "4200119" | "4764996" | "4980932" | "5287565").PN.	USPAT	2004/06/15 10:32
15	2	2087503.URPN.	USPAT	2004/06/15 10:33
16	2	2087503.URPN.	USPAT	2004/06/15 10:33
17	187	137/441.ccls.	USPAT; US-PGPUB	2004/06/15 10:47
19	256	(toilet adj float valve and (adjustable adj bowl fill valve)) and 4/415.ccls.	USPAT; US-PGPUB	2004/06/15 11:03
20	86	(toilet adj float valve and (adjustable adj bowl fill valve)) and 4/366.ccls.	USPAT; US-PGPUB	2004/06/15 10:48
18	286	4/415.ccls.	USPAT; US-PGPUB	2004/06/15 11:01
21	86	4/415.ccls.	EPO; JPO; DERWENT; IBM_TDB	2004/06/15 11:01
22	0	(toilet adj float valve and (adjustable adj bowl fill valve)) and 4/415.ccls.	EPO; JPO; DERWENT; IBM_TDB	2004/06/15 11:03
23	0	(toilet adj float valve and (adjustable adj bowl fill valve)) and 137/441.ccls.	EPO; JPO; DERWENT; IBM_TDB	2004/06/15 11:03

-	14	"5334352"	USPAT; US-PGPUB	2004/06/04 15:31

Fluidmaster, Inc. - EX1012, Page 039
IPR2024-00633 (Fluidmaster Inc v. Danco Inc)

Express Mail Label No. EU736542254US

21861 U.S. PTO
031104

UTILITY PATENT APPLICATION TRANSMITTAL
(Small Entity)

(Only for new nonprovisional applications under 37 CFR 1.53(b))

Docket No.
1008-100500

Total Pages in this Submission
29

TO THE COMMISSIONER FOR PATENTS
Mail Stop Patent Application
P.O. Box 1450
Alexandria, VA 22313-1450

Transmitted herewith for filing under 35 U.S.C. 111(a) and 37 C.F.R. 1.53(b) is a new utility patent application for an invention entitled:

TOILET FILL VALVE WITH ADJUSTABLE BOWL FILL FLOW

17510 U.S. PTO
10/798606
031104

and invented by:

Michael J. Schuster

If a CONTINUATION APPLICATION, *check appropriate box and supply the requisite information:*

☐ **Continuation** ☐ **Divisional** ☐ **Continuation-in-part (CIP)** of prior application No.: _____

Which is a:

☐ **Continuation** ☐ **Divisional** ☐ **Continuation-in-part (CIP)** of prior application No.: _____

Which is a:

☐ **Continuation** ☐ **Divisional** ☐ **Continuation-in-part (CIP)** of prior application No.: _____

Enclosed are:

Application Elements

1. ☒ Filing fee as calculated and transmitted as described below
2. ☒ Specification having 10 pages and including the following:
   - a. ☒ Descriptive Title of the Invention
   - b. ☐ Cross References to Related Applications *(if applicable)*
   - c. ☐ Statement Regarding Federally-sponsored Research/Development *(if applicable)*
   - d. ☐ Reference to Sequence Listing, a Table, or a Computer Program Listing Appendix
   - e. ☒ Background of the Invention
   - f. ☐ Brief Summary of the Invention
   - g. ☒ Brief Description of the Drawings *(if filed)*
   - h. ☒ Detailed Description
   - i. ☒ Claim(s) as Classified Below
   - j. ☒ Abstract of the Disclosure

P01USML/REV06

UTILITY PATENT APPLICATION TRANSMITTAL (Small Entity) *(Only for new nonprovisional applications under 37 CFR 1.53(b))*	Docket No. 1008-100500
	Total Pages in this Submission 29

Application Elements (Continued)

3. ☒ Drawing(s) *(when necessary as prescribed by 35 USC 113)*
   a. ☒ Formal Number of Sheets 3
   b. ☐ Informal Number of Sheets _____
4. ☒ Oath or Declaration
   a. ☒ Newly executed *(original or copy)* ☐ Unexecuted
   b. ☐ Copy from a prior application (37 CFR 1.63(d)) *(for continuation/divisional application only)*
   c. ☒ With Power of Attorney ☐ Without Power of Attorney
   d. ☐ *DELETION OF INVENTOR(S)*
   Signed statement attached deleting inventor(s) named in the prior application, see 37 C.F.R. 1.63(d)(2) and 1.33(b).
5. ☐ Incorporation By Reference *(usable if Box 4b is checked)*
   The entire disclosure of the prior application, from which a copy of the oath or declaration is supplied under Box 4b, is considered as being part of the disclosure of the accompanying application and is hereby incorporated by reference therein.
6. ☐ CD ROM or CD-R in duplicate, large table or Computer Program (Appendix)
7. ☐ Application Data Sheet (See 37 CFR 1.76)
8. ☐ Nucleotide and/or Amino Acid Sequence Submission *(if applicable, all must be included)*
   a. ☐ Computer Readable Form (CFR)
   b. ☐ Specification Sequence Listing on:
      i. ☐ CD-ROM or CD-R (2 copies); or
      ii. ☐ Paper
   c. ☐ Statement(s) Verifying Identical Paper and Computer Readable Copy

Accompanying Application Parts

9. ☐ Assignment Papers (cover sheet & document(s))
10. ☐ 37 CFR 3.73(B) Statement (when there is an assignee)
11. ☐ English Translation Document (if applicable)
12. ☒ Information Disclosure Statement/PTO-1449 ☐ Copies of IDS Citations
13. ☐ Preliminary Amendment
14. ☒ Return Receipt Postcard (MPEP 503) (Should be specifically itemized)
15. ☐ Certified Copy of Priority Document(s) (if foreign priority is claimed)
16. ☒ Certificate of Mailing
    ☐ First Class ☐ Express Mail *(Specify Label No.)*: EU736542254US

UTILITY PATENT APPLICATION TRANSMITTAL (Small Entity) *(Only for new nonprovisional applications under 37 CFR 1.53(b))*	Docket No. 1008-100500
	Total Pages in this Submission 29

Accompanying Application Parts (Continued)

17. ☒ Applicant claims small entity status. See 37 CFR 1.27.

    ☐ (Optional) Small Entity Statement(s) - Specify Number of Statements Submitted: _____

18. ☐ Additional Enclosures *(please identify below):*

Request That Application Not Be Published Pursuant To 35 U.S.C. 122(b)(2)

19. ☒ Pursuant to 35 U.S.C. 122(b)(2), Applicant hereby requests that this patent application not be published pursuant to 35 U.S.C. 122(b)(1). Applicant hereby certifies that the invention disclosed in this application has not and will not be the subject of an application filed in another country, or under a multilateral international agreement, that requires publication of applications 18 months after filing of the application.

Warning

An applicant who makes a request not to publish, but who subsequently files in a foreign country or under a multilateral international agreement specified in 35 U.S.C. 122(b)(2)(B)(i), must notify the Director of such filing not later than 45 days after the date of the filing of such foreign or international application. A failure of the applicant to provide such notice within the prescribed period shall result in the application being regarded as abandoned, unless it is shown to the satisfaction of the Director that the delay in submitting the notice was unintentional.

UTILITY PATENT APPLICATION TRANSMITTAL
(Small Entity)

(Only for new nonprovisional applications under 37 CFR 1.53(b))

Docket No.
1008-100500

Total Pages in this Submission
29

Fee Calculation and Transmittal

CLAIMS AS FILED

For	#Filed	#Allowed	#Extra	Rate	Fee
Total Claims	10	- 20 =	0	x $9.00	$0.00
Indep. Claims	3	- 3 =	0	x $43.00	$0.00
Multiple Dependent Claims (check if applicable) ☐					$0.00
				BASIC FEE	$385.00
OTHER FEE ***(specify purpose)***					$0.00
				TOTAL FILING FEE	$385.00

☐ A check in the amount of to cover the filing fee is enclosed.

☒ The Director is hereby authorized to charge and credit Deposit Account No. **50-2425** as described below.

- ☒ Charge the amount of **$385.00** as filing fee.
- ☒ Credit any overpayment.
- ☒ Charge any additional filing fees required under 37 C.F.R. 1.16 and 1.17.
- ☐ Charge the issue fee set in 37 C.F.R. 1.18 at the mailing of the Notice of Allowance, pursuant to 37 C.F.R. 1.311(b).

Dated: **March 11, 2004**

Michael J. D'Aurelio
Signature

Michael J. D'Aurelio
Registration Number: 40,977

cc:

P01USML/REV06

PATENT

IN THE UNITED STATES PATENT AND TRADEMARK OFFICE

In re the application of: Michael J. Schuster	)	
Filing Date: Herewith	)	Atty Docket No.: 1008-100500
Title: TOILET FILL VALVE WITH ADJUSTABLE BOWL FILL FLOW	)	Atty Reference:

CERTIFICATE OF MAILING BY EXPRESS MAIL

I hereby certify that the following correspondence:

Utility Patent Application (11 Pages including coversheet)
3 Drawings (Formal) (3 Pages)
Utility Application Transmittal (8 Pages – in Duplicate)
Declaration/Power of Attorney (2 Pages, Signed)
1 Return Receipt Postcard
IDS/Forms 1449 (4 Pages)
Fee of $385.00 paid via Deposit Account Number 50-2425

is being deposited with the United States Postal Service "Express Mail Post Office to Addressee" service under 37 CFR 1.10 with Express Mail No. EU736542254US on the date indicated below in an envelope addressed to: Mail Stop PATENT APPLICATION, Commissioner for Patents, P.O. Box 1450, Alexandria, Virginia 22313-1450.

3/11/04
Date

Michael J. D'Aurelio
Registration Number 40,977

Docket No. 1008-100500

TO ALL WHOM IT MAY CONCERN:

Be it known that I, Michael J. Schuster, residing at 612 Nicholson Street, Joliet, Illinois 60435, a citizen of the United States have invented the invention described in the following Patent Application entitled

TOILET FILL VALVE WITH ADJUSTABLE BOWL FILL FLOW.

EXPRESS MAIL NO.

EU736542254US

TOILET FILL VALVE WITH ADJUSTABLE BOWL FILL FLOW

BACKGROUND

[0001] A toilet fill valve in a toilet typically includes a water outlet that provides water for refilling a toilet bowl during a flush cycle. Unfortunately, the water flowing out of such conventional water outlets to fill a toilet bowl provide much more water than is necessary to fill the average toilet bowl. Consequently, much of the water that flows into a toilet bowl during the average flush cycle is lost down the drain. This translates into a lost of millions of gallons of water each year.

BRIEF DESCRIPTION OF THE SEVERAL VIEWS OF THE DRAWINGS

[0002] The invention can be understood with reference to the following drawings. The components in the drawings are not necessarily to scale. Also, in the drawings, like reference numerals designate corresponding parts throughout the several views.

[0003] FIG. 1 is a drawing of a side view of a toilet fill valve according to an embodiment of the present invention;

[0004] FIG. 2 is a drawing of a top view of the toilet fill valve of FIG. 1; and

[0005] FIG. 3 is a drawing of a cutaway view of a toilet tank within which the toilet fill valve of FIG. 1 is installed.

DETAILED DESCRIPTION

[0006] With reference to FIG. 1, shown is a toilet fill valve 100 according to an embodiment of the present invention. The toilet fill valve 100 includes a water inlet 103 at the bottom of the toilet fill valve 100 that is configured to be coupled to a water source outside of a toilet tank within which the toilet fill valve 100 is installed. The toilet fill valve 100 includes one or more water outlets 106 that are configured to supply water into a toilet tank within which the toilet fill valve 100 is installed. The toilet fill valve 100 may be, for example, a pilot style fill valve. However, it is understood that

the toilet fill valve 100 may be any style of fill valve such as, for example, a ballcock valve, *etc.* The toilet fill valve 100 also includes a bowl fill valve 109 according to an embodiment of the present invention. The bowl fill valve 109 includes a bowl fill valve inlet 113 and a bowl fill valve outlet 116. In addition, the bowl fill valve 109 includes a handle 119 that facilitates a manual adjustment of the bowl fill valve 109.

[0007] The bowl fill valve 109 is integral with the toilet fill valve 100. In this respect, the term "integral" refers to the fact that the bowl fill valve 109 and the toilet fill valve 100 comprise a single structure. In this respect, the bowl fill valve 109 may be included within the body of the toilet fill valve 100 as a portion of the toilet fill valve 100 in a single piece construction. Specifically, the bowl fill valve 109 may be molded as a portion of the toilet fill valve 100 or it may be snapped or clamped into place, or it may be attached to the toilet fill valve 100 in some other manner, etc.

[0008] Within the toilet fill valve 100, the bowl fill valve inlet 113 is operatively coupled to the water inlet 103. In this respect, when the toilet fill valve 100 is open and water flows from the water inlet 103 to the water outlets 106 and into a toilet tank, an amount of water is also supplied to the bowl fill valve inlet 113 that flows through the bowl fill valve 109 and out the bowl fill valve outlet 116. By virtue of the manual setting of the handle 119 of the bowl fill valve 109, the flow of water through the bowl fill valve 109 is regulated. In this manner, the flow of water is regulated so that enough water flows out of the bowl fill valve 109 to fill a toilet bowl without wasting any water down a drain.

[0009] Thus, the bowl fill valve 109 is configured to supply an adjustable flow of water out of the bowl fill outlet 116 that is directed to a toilet bowl during a flush cycle of a toilet to fill the toilet bowl. The flow of water is adjusted so that just enough flows out of bowl fill valve 109 so as to fill the toilet bowl without wasting any water.

[0010] The toilet fill valve 100 includes a float 123 that is operatively coupled to an actuating arm (not shown) by a translating stem 126. The float 123 floats on the water within a toilet tank and, depending on the location of the float 123 along the toilet fill valve 100, the toilet fill valve 100 is open or closed as can be appreciated by those with ordinary skill in the art. The bowl fill valve 109 and the actuating arm (not

shown) are each located on the toilet fill valve 100 so as to prevent any interference between the bowl fill valve 109 and the translational stem 126 or the actuating arm as will be discussed.

[0011] According to an embodiment of the present invention, the bowl fill valve 109 may include a number of biased positions. In this respect, the movement of the handle 119 may cause the bowl fill valve 109 to move from one predefined biased position to other predefined biased positions. In this respect, various mechanisms such as tabs, snaps, or other position biasing structures may be employed. The biased positions of the bowl fill valve 109 help ensure that the bowl fill valve 109 remains in a given setting selected by a user by a manual manipulation of the handle 119 during the normal course of operation of the toilet fill valve 100. Thus, by virtue of the biased positions, the bowl fill valve 109 is prevented from moving out of a desired position set by a user over a long period of use due to vibration and other factors as can be appreciated by those with ordinary skill in the art.

[0012] The bowl fill valve 109 may be, for example, a ball valve, a gate valve, a globe valve, a plug valve, a diaphragm valve, a butterfly valve, a needle valve, a sliding gate, a quick turn valve, a knife valve or any other appropriate type of valve as can be appreciated by those with ordinary skill in the art.

[0013] To operate the toilet fill valve 100, the toilet fill valve 100 is first installed within a toilet tank. When a toilet is flushed and the tank is drained, the float 123 moves downward along the toilet fill valve 100 and, consequently, the toilet fill valve 100 opens to allow water to flow from the water inlet 103 and out the water outlets 106 into a toilet tank. At the same time, water flows into the bowl fill valve inlet 113 and out the bowl fill valve outlet 116 through the bowl fill valve 109. Based on the setting of the handle 119, the bowl fill valve 109 determines the precise flow rate of the water that flows out the bowl fill valve outlet 116. A tube is typically employed to direct the water flowing out the bowl fill valve outlet 116 to an overflow tube in the toilet tank. In this respect, the water flowing out the bowl fill valve outlet 116 refills the toilet bowl of the respective toilet.

[0014] Referring next to FIG. 2, shown is a top view of the toilet fill valve 100 according to an embodiment of the present invention. In this respect, the actuating arm 129 of the bowl fill valve 100 is seen with respect to the bowl fill valve 109. The actuating arm 129 is coupled to the float by way of the translational stem 126 (FIG. 1). In this respect, the actuating arm 129 extends in an orthogonal direction relative to a longitudinal axis 133 of the toilet fill valve 100. The longitudinal axis 133 is centered in the toilet fill valve 100 along the length of the toilet fill valve 100. Also, the bowl fill valve 109 extends in an orthogonal direction relative to the longitudinal axis 133 of the toilet fill valve 100. In order to prevent interference between the bowl fill valve 109 and the translational stem 126 or the actuating arm 129, the actuating arm 129 is radially offset relative to the bowl fill valve 109 as shown. In this respect, the translational stem 126 is coupled to the free end of the actuating arm 129. By virtue of the radial offset between the bowl fill valve 109 and the actuating arm 129, the operation of the bowl fill valve 109 does not interfere with the operation of the toilet fill valve 100 itself by virtue of the fact that the float 123 (FIG. 1) can move freely with the movement of the translational stem 126 in order for proper operation of the toilet fill valve 100.

[0015] With reference to FIG. 3, shown is the toilet fill valve 100 as installed within a toilet tank 143 according to an embodiment of the present invention. In this respect, the toilet fill valve 100 includes the water inlet 103 that is coupled to a water source outside of the toilet tank 143. The toilet fill valve 100 also includes one or more water outlets 106 that direct a flow of water into the toilet tank 143 during the operation of a flush cycle. The bowl fill valve 109 includes the bowl fill valve inlet (not shown) and the bowl fill valve outlet 116, where the bowl fill valve inlet is operatively coupled to the water inlet 103 as described above. Also, the bowl fill valve 109 is integrated with the body of the toilet fill valve 100 as described above.

[0016] A tube 146 is coupled to the bowl fill valve outlet 116 and is directed into the overflow tube 149 of the toilet tank 143. The tube 146 directs water that flows out of the bowl fill valve outlet 116 into the overflow tube 149 and refills the toilet bowl associated with the toilet tank 143 as can be appreciated by those with ordinary skill in the art. The bowl fill valve 109 is configured to supply the adjustable flow of water out

the bowl fill valve outlet through the tube 146 and into the overflow tube 149 for filling the toilet bowl during the flush cycle of the toilet. In this respect, no pressure is seen within the tube 146. Specifically, the fact that the bowl fill valve 109 is integral with the toilet fill valve 100 prevents the creation of a pressure head in the tube 146 as would be the case if the bowl fill valve 109 were included in the middle of the tube 146. The fact that a pressure head is not created in any portion of the tube 146 prevents the tube 146 from working its way off of the bowl fill valve outlet 116 over time.

[0017] When installed, the bowl fill valve 109 is calibrated for the particular flush cycle of the toilet within which the toilet fill valve 100 is installed. To calibrate the bowl fill valve 109, a user first determines the water level in the toilet bowl when the toilet bowl is full of water. This gives the user a starting and an ending point for determining when the toilet bowl of the respective toilet is full. Next, the bowl fill valve handle 109 is adjusted so that the bowl fill valve 109 is placed in a predefined position that allows a predefined flow of water to refill the toilet bowl. In this manner, one adjusts the actual flow of water that refills the toilet bowl. Thereafter, the user flushes the toilet itself. Next, the user determines if the flow of water into the toilet bowl by virtue of the adjustments made to the bowl fill valve 109 is adequate to refill the toilet bowl during the flush cycle. This may be determined, by identifying whether the level of the water in the toilet bowl reaches the full level determined at the beginning of the bowl fill valve calibration above.

[0018] The flow of water from the bowl fill valve 109 should be set so as to ensure that the water level in the toilet bowl reaches the full level at about the same time that the flush cycle ends. In other words, the level of water in the toilet bowl should reach its highest level at the same time that the flush cycle ends. This prevents any water from being lost down the drain associated with the toilet.

[0019] If the amount of water that flows into the toilet bowl is inadequate to refill the toilet bowl during the flush cycle as described above, then one should repeat the steps of adjusting the bowl fill valve, flushing the toilet, and then once again determining if the flow of water into the toilet bowl is adequate to refill the toilet bowl during a flush cycle.

[0020] Ultimately, during use of the toilet that includes the toilet fill valve 100 and the toilet tank 143, a user flushes the toilet and a predetermined flow of water exits the bowl fill valve outlet 116 and is directed into the toilet bowl. After the toilet tank has drained during the flush cycle, a flapper closes in the toilet tank and the toilet tank refills. During the refilling of the tank, the water supplied by the bowl fill valve 109 fills the toilet bowl itself. The amount of water supplied by the bowl fill valve in the time it takes to refill the toilet tank should be approximately equal to the amount of water needed to fill the toilet bowl. By virtue of the fact that the bowl fill valve 100 is integrated within the toilet fill valve 100, a pressure head is prevented from being created due to any potential pinching of the tube 146 or other similar adjustment mechanism.

[0021] Although the invention is shown and described with respect to certain embodiments, it is obvious that equivalents and modifications will occur to others skilled in the art upon the reading and understanding of the specification. The present invention includes all such equivalents and modifications, and is limited only by the scope of the claims.

CLAIMS

What is claimed is:

1. A toilet fill valve, comprising:

a water inlet;

a first water outlet configured to supply water to a toilet tank; and

a bowl fill valve having a bowl fill valve inlet and a bowl fill valve outlet, the bowl fill valve inlet being operatively coupled to the water inlet, the bowl fill valve being integrated with a body of the toilet fill valve, and the bowl fill valve being configured to supply an adjustable flow of water out the bowl fill outlet for filling a toilet bowl during a flush cycle of a toilet.

2. The toilet fill valve of claim 1, further comprising:

an actuating arm coupled to a float, the actuating arm extending in an orthogonal direction relative to a longitudinal axis of the toilet fill valve; and

the bowl fill valve extending in an orthogonal direction relative to the longitudinal axis of the toilet fill valve, wherein the actuating arm is radially offset relative to the bowl fill valve, thereby preventing an interference with the bowl fill valve and a translational stem extending from the float to a free end of the actuating arm.

3. The toilet fill valve of claim 1, wherein the bowl fill valve further comprises a number of biased positions.

4. The toilet fill valve of claim 1, wherein the bowl fill valve is a type of valve selected from the group consisting of a ball valve, a gate valve, a globe valve, a plug valve, a diaphragm valve, a butterfly valve, a needle valve, a sliding gate, a quick turn valve, and a knife valve.

5. The toilet fill valve of claim 1, wherein the bowl fill valve is a ball valve.

6. The toilet fill valve of claim 1, wherein the bowl fill valve is a butterfly valve.

7. The toilet fill valve of claim 1, wherein the bowl fill valve is a needle valve.

8. A toilet tank with an adjustable bowl fill water flow, comprising:

a toilet fill valve having a water inlet coupled to a water source outside of the toilet tank and a water outlet directing an flow of water into the toilet tank;

a bowl fill valve having a bowl fill valve inlet and a bowl fill valve outlet, the bowl fill valve inlet being operatively coupled to the water inlet, the bowl fill valve being integrated with a body of the toilet fill valve;

a tube coupling the bowl fill valve outlet to an overflow tube of the toilet tank, wherein a flow of water into the overflow tube is directed to a toilet bowl; and

the bowl fill valve being configured to supply an adjustable flow of water out the bowl fill outlet through the tube and into the overflow tube for filling the toilet bowl during a flush cycle of a toilet, the bowl fill valve preventing a creation of a pressure head in the tube.

9. A method for adjusting a bowl fill water flow during a flush cycle in a toilet, comprising the steps of:

determining a water level in a toilet bowl when the toilet bowl is full of water;

adjusting a bowl fill valve integrated with a toilet fill valve in the toilet to a predefined position, thereby adjusting a flow of water that refills the toilet;

flushing the toilet;

determining if the flow of water into the toilet bowl is adequate to refill the toilet bowl during the flush cycle; and

repeating the steps of adjusting the bowl fill valve, flushing the toilet, and determining if the flow of water into the bowl is adequate to refill the toilet bowl until the toilet bowl is substantially filled during a flush cycle.

10. The toilet fill valve of claim 9, further comprising preventing a creation of a pressure head in a tube that is coupled between an outlet of the bowl fill valve and an overflow tube in the toilet by adjusting the bowl fill valve integrated with the toilet fill valve .

ABSTRACT OF THE DISCLOSURE

A toilet fill valve and methods are provided. In one embodiment, the toilet fill valve includes a water inlet and a first water outlet configured to supply water to a toilet tank. The toilet fill valve further includes a bowl fill valve having a bowl fill valve inlet and a bowl fill valve outlet, the bowl fill valve inlet being operatively coupled to the water inlet. The bowl fill valve is integrated with a body of the toilet fill valve. The bowl fill valve is configured to supply an adjustable flow of water out the bowl fill outlet for filling a toilet bowl during a flush cycle of a toilet.

TOILET FILL VALVE WITH ADJUSTABLE BOWL FILL FLOW
Inventor: Michael J. Schuster
Attorney Docket Number: 1008-100500

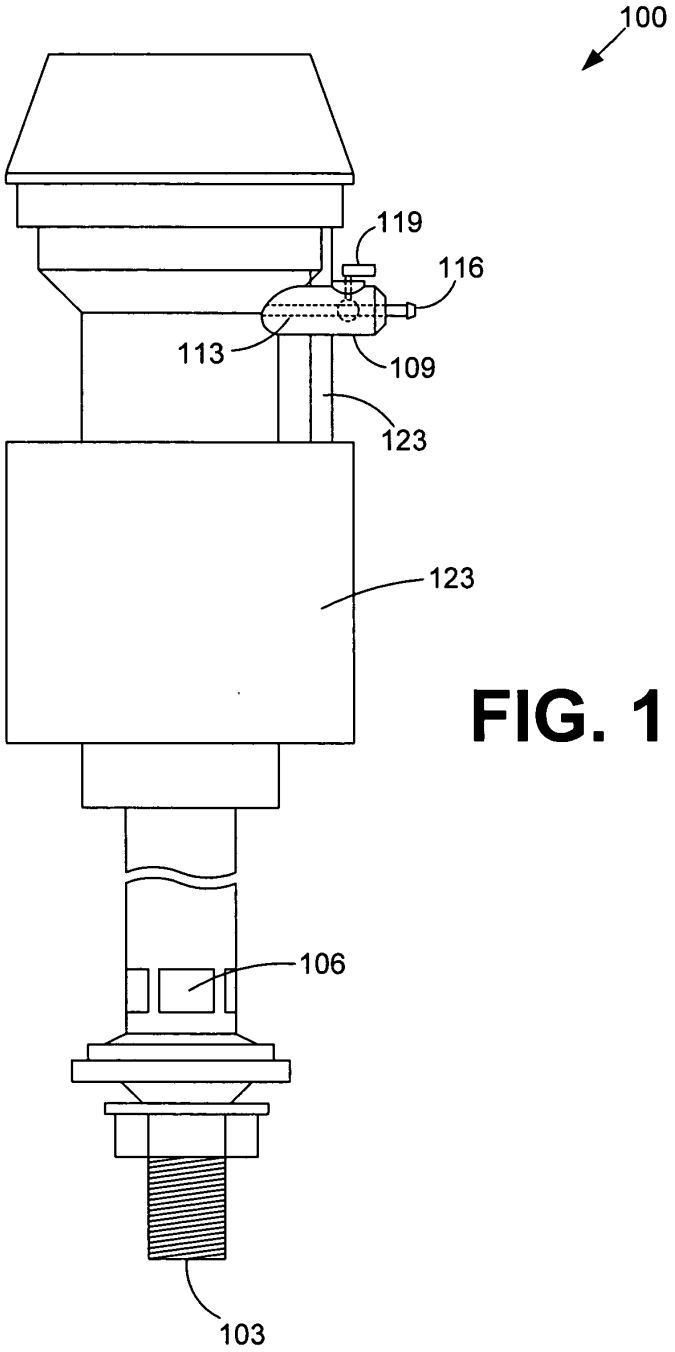

FIG. 1

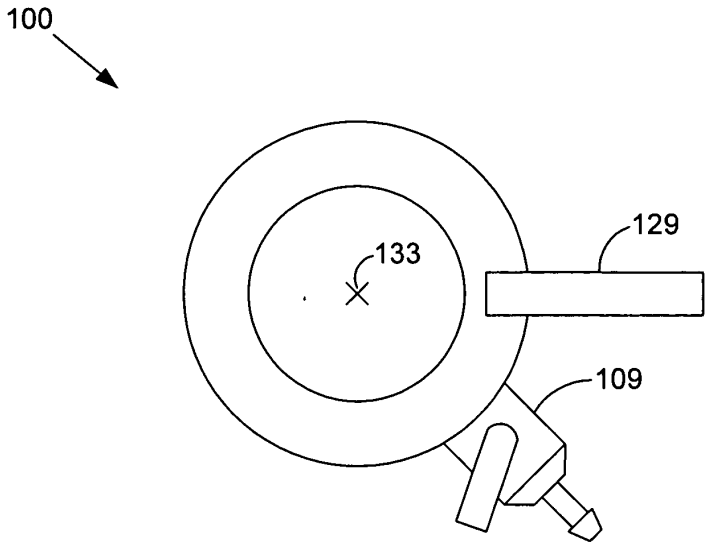

FIG. 2

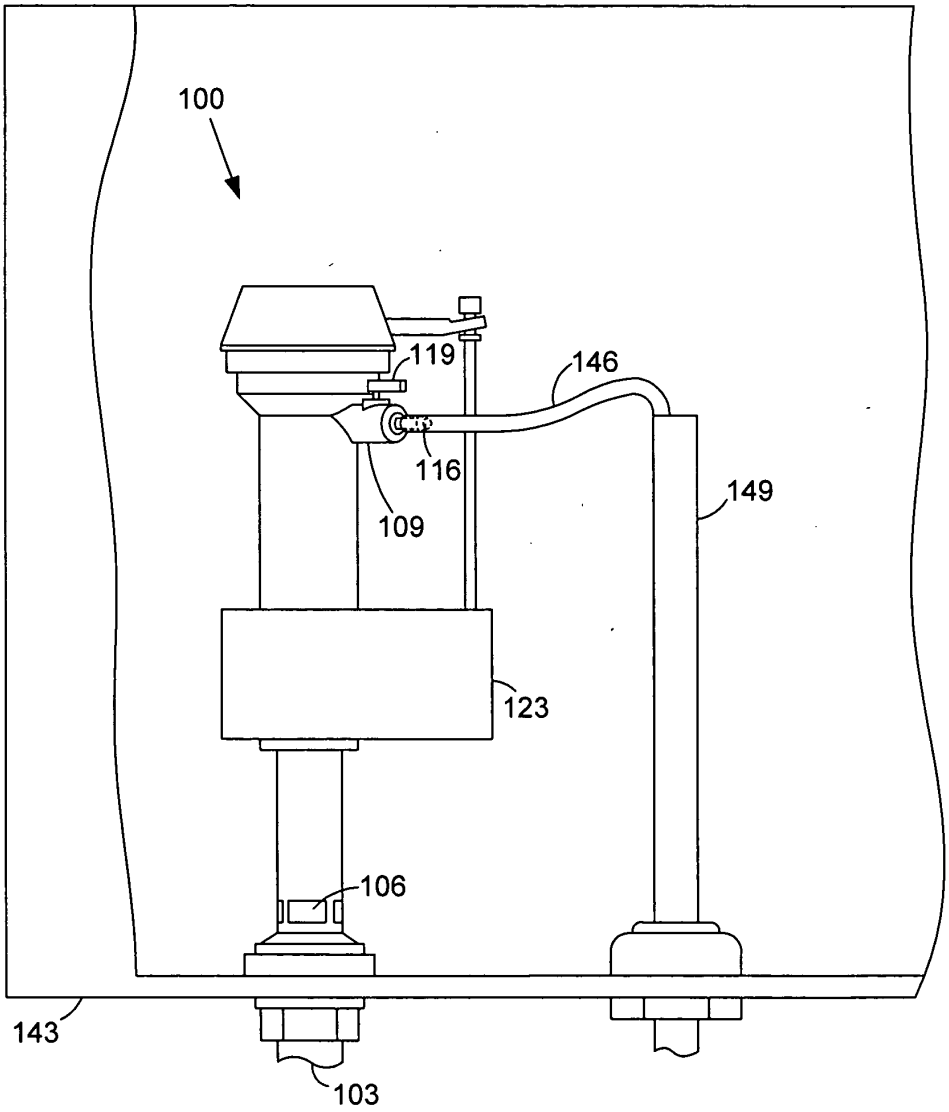

FIG. 3

Docket No. 1008-100500 **PATENT APPLICATION**

COMBINED DECLARATION AND POWER OF ATTORNEY

As a below named inventor, I hereby declare that:

My residence, post office address, and citizenship are as stated below next to my name.

I believe I am the original, first and sole inventor (if only one name is listed below) or an original, first and joint inventor (if plural names are listed below) of the subject matter which is claimed and for which a patent is sought on the invention entitled:

TOILET FILL VALVE WITH ADJUSTABLE BOWL FILL FLOW

the specification of which

☒ is attached hereto.

☐ was filed on _____ as U.S. Patent Application Serial Number _____.

☐ was filed on _____ as a U.S. Patent Application under Express Mail Number _____.

☐ is set forth in PCT International Application Number _____ filed on _____;
☐ and as amended under PCT Article 19 on _____

I hereby state that I have reviewed and understand the contents of the above identified specification, including the claims, as amended by any amendment referred to above. I acknowledge the duty to disclose information which is material to the patentability of the above identified invention as defined in Title 37, Code of Federal Regulations §1.56.

CLAIM FOR BENEFIT OF U.S. PROVISIONAL APPLICATION(S) UNDER 35 U.S.C. §119(e)

I hereby claim the benefit under Title 35, United States Code §119(e) of any United States provisional application(s) listed below:

APPLICATION SERIAL NUMBER	FILING DATE

CLAIM FOR BENEFIT OF U.S. APPLICATION(S) UNDER 35 U.S.C. §120

I hereby claim the benefit under 35 U.S.C. §120 of any United States application(s) or PCT International Application(s) designating the United States of America listed below and, insofar as the subject matter of each of the claims of this application is not disclosed in the prior application(s) in the manner provided by the first paragraph of 35 USC §112, I acknowledge the duty to disclose material information as defined in 37 CFR §1.56(a) which became available between the filing date of the prior application and the national or PCT international filing date of this application.

APPLICATION SERIAL NUMBER	FILING DATE	STATUS (patented/pending/abandoned)

CLAIM OF FOREIGN PRIORITY UNDER 35 U.S.C. §119

I hereby claim foreign priority benefits under Title 35, United States Code Section 119 of any foreign application(s) for patent or inventor(s) certificate listed below and have also identified below any foreign application for patent or inventor(s) certificate having a filing date before that of the application of which priority is claimed:

COUNTRY	APPLICATION NUMBER	DATE FILED	PRIORITY CLAIMED UNDER 35 U.S.C. §119
			☐ Yes ☐ No
			☐ Yes ☐ No

EXPRESS MAIL NO.
EU736542254US

Fluidmaster, Inc. - EX1012, Page 059
IPR2024-00633 (Fluidmaster Inc v. Danco Inc)

POWER OF ATTORNEY

As a named inventor, I hereby appoint the following attorney(s) and/or agent(s) to prosecute this application and transact all business in the Patent and Trademark Office connected therewith:

NAME	REG. NUMBER
Michael J. D'Aurelio	40,977
Eileen T. Mathews	41,973

Please forward all correspondence related to the present application to the following address:

Michael J. D'Aurelio
D'Aurelio & Mathews, LLC
96 Church Street
Chagrin Falls, Ohio 44022

Please direct all telephone calls in the first instance to:

Michael J. D'Aurelio
Telephone: (440) 729-7450
Facsimile: (440) 729-7465

I hereby declare that all statements made herein of my own knowledge are true and that all statements made on information and belief are believed to be true; and further that these statements were made with knowledge that willful false statements and the like are punishable by fine or imprisonment, or both, under Section 1001 of Title 18 of the United States Code, and that such willful false statements may jeopardize the validity of the application or any patent issued therein.

Signature of Sole or First Inventor

Full Name of Inventor: Michael J. Schuster
Residence: 612 Nicholson Street, Joliet, Illinois 60435
Post Office Address: 612 Nicholson Street, Joliet, Illinois 60435
Citizenship: United States

Inventor's Signature: Michael J. Schuster **Date:** 3-10-04

Signature of Second Inventor

Full Name of Inventor: N/A
Residence: N/A
Post Office Address: N/A
Citizenship: N/A

Inventor's Signature: _____ **Date:** _____

CERTIFICATION UNDER 37 CFR 1.10

I hereby certify that this correspondence (along with any other paper referred to as being attached or enclosed) is being deposited with the United States Postal Service "Express Mail Post Office to Adressee" service under 37 CFR §1.10 with Express Mail No. EU736542254US on the date indicated below in an envelope addressed to: Commissioner for Patents, P.O. Box 1450, Alexandria, VA, 22313-1450

3/11/04 .
Date

Michael J. D'Aurelio
Michael J. D'Aurelio

PATENT

IN THE UNITED STATES PATENT AND TRADEMARK OFFICE

In re the application of: Michael J. Schuster	)	
Serial Number: Not yet assigned	)	Art Unit: Not yet assigned
Filing Date: Herewith	)	Examiner: Not yet assigned
Title: TOILET FILL VALVE WITH ADJUSTABLE BOWL FILL FLOW	)	Docket No.: 1008-100500

INFORMATION DISCLOSURE STATEMENT

Commissioner for Patents
P.O. Box 1450
Alexandria, VA 22313-1450

Sir:

This Information Disclosure Statement is submitted:

☒ under 37 CFR §1.97(b).

☐ under 37 CFR §1.97(c) together with either a:
- ☐ a statement under 37 CFR §1.97(e) is provided below; or
- ☐ a fee of $_____ as required under 37 CFR 1.17(p) paid as indicated below.

☐ under 37 CFR §1.97(d) together with a statement under 37 CFR §1.97(e) as provided below; and a fee of $_____ as set forth under 37 CFR 1.17(p) paid as indicated below.

In addition, the following apply as indicated:

☒ Submitted herewith is/are form(s) PTO 1449 along with copies of patents, publications, or other information of which applicant(s) are aware that applicant(s) believe(s) may be material to the examination of this application and for which there may be a duty to disclose in accordance with 37 CFR §1.56.

☐ Submitted herewith is/are forms PTO 1449 that identify the patents, publications, or other information previously cited or submitted to the Office in the following application(s) upon which this application relies for an earlier filing date under 35 U.S.C. §120.

Serial Number	Filing Date

Fluidmaster, Inc. - EX1012, Page 061
IPR2024-00633 (Fluidmaster Inc v. Danco Inc)

☐ A concise explanation of the relevance of any foreign language patents, publications, and other information listed on the form(s) PTO 1449 submitted herewith as presently understood by the individual(s) designated in 37 CFR §1.56(c) most knowledgeable about the content is given on the attached sheet, or where a foreign language patent is cited in a search report or other action by a foreign patent office in a counterpart foreign application, an English language version of the search report or action which indicates the degree of relevance found by the foreign office is listed on form PTO 1449 and is enclosed herewith.

☐ The undersigned hereby states as set forth under 37 CFR §1.97(e)(1) that each item of information contained in this information disclosure statement was first cited in any communication from a foreign patent office in a counterpart foreign application not more than three months prior to the filing of the this information disclosure statement.

☐ The undersigned hereby states as set forth under 37 CFR §1.97(e)(2) that no item of information contained in this information disclosure statement was cited in a communication from a foreign patent office in a counterpart foreign application, and, to the knowledge of the person signing the certification after making reasonable inquiry, no item of information contained in the information disclosure statement was known to any individual designated in 37 CFR §1.56(c) more than three months prior to the filing of the information disclosure statement.

Any fee due as indicated above is provided as indicated below:

☐ A check in the amount of $_____ is enclosed herewith that covers or includes the required fee as indicated above.
☐ A form PTO-2038 is enclosed herewith authorizing a credit card charge in the amount of $_____.
☒ Please charge to Deposit Account __50-2425__ the sum of $0.00.
☒ The Commissioner is authorized to charge any insufficiencies and the Commissioner is hereby requested to credit any overpayment to Deposit Account __50-2425___.

Applicant(s) respectfully requests that the references listed in the form(s) PTO 1449 be "made of record" in the above-identified patent application.

Respectfully submitted,

Michael J. D'Aurelio

Michael J. D'Aurelio
Registration Number 40,977

D'Aurelio & Mathews, LLC
96 Church Street
Chagrin Falls, OH 44022
Phone: (440) 729-7450
Fax: (440) 729-7465

Fluidmaster, Inc. - EX1012, Page 062
IPR2024-00633 (Fluidmaster Inc v. Danco Inc)

PTO/SB/08A (04-03)
Approved for use through 04/30/2003. OMB 0651-0031
U.S. Patent and Trademark Office; U.S. DEPARTMENT OF COMMERCE
Under the Paperwork Reduction Act of 1995, no persons are required to respond to a collection of information unless it contains a valid OMB control number.

Substitute for form 1449/PTO

INFORMATION DISCLOSURE STATEMENT BY APPLICANT

(Use as many sheets as necessary)

Sheet 1 of 2

Complete if Known	
Application Number	
Filing Date	Herewith
First Named Inventor	Michael J. Schuster
Art Unit	
Examiner Name	
Attorney Docket Number	1008-100500

U. S. PATENT DOCUMENTS

Examiner Initials*	Cite No.[1]	Document Number Number-Kind Code[2] (if known)	Publication Date MM-DD-YYYY	Name of Patentee or Applicant of Cited Document	Pages, Columns, Lines, Where Relevant Passages or Relevant Figures Appear
		US- 2002/0092090 A1	07-18-2002	Johnson	
		US- 2002/0162166 A1	11-07-2002	Saar et al.	
		US- 3,986,216	10-19-1976	Davis et al.	
		US- 3,994,628	11-30-1976	Kemper	
		US- 4,007,498	02-15-1977	Pearson	
		US- 4,017,916	04-19-1977	Pearson	
		US- 4,032,822	06-28-1977	Un	
		US- 4,090,532	05-23-1978	Story, Jr.	
		US- 4,145,775	03-27-1979	Butler	
		US- 4,392,260	07-12-1983	Bensen	
		US- 4,707,867	11-24-1987	Kawabe et al.	
		US- 4,764,996	08-23-1988	Pino	
		US- 4,793,588	12-27-1988	Laverty, Jr.	
		US- 4,918,764	04-24-1990	Haselswerdt et al.	
		US- 4,980,932	01-01-1991	Stemples	
		US- 5,007,452	04-16-1991	Antunez	
		US- 5,036,553	08-06-1991	Sanderson	
		US- 5,052,060	10-01-1991	Makita et al.	
		US- 5,134,729	08-04-1992	Shaw	

FOREIGN PATENT DOCUMENTS

Examiner Initials*	Cite No.[1]	Foreign Patent Document Country Code[3]-Number[4]-Kind Code[5] (if known)	Publication Date MM-DD-YYYY	Name of Patentee or Applicant of Cited Document	Pages, Columns, Lines, Where Relevant Passages Or Relevant Figures Appear	T[6]

Examiner Signature		Date Considered	

*EXAMINER: Initial if reference considered, whether or not citation is in conformance with MPEP 609. Draw line through citation if not in conformance and not considered. Include copy of this form with next communication to applicant. [1] Applicant's unique citation designation number (optional). [2] See Kinds Codes of USPTO Patent Documents at www.uspto.gov or MPEP 901.04. [3] Enter Office that issued the document, by the two-letter code (WIPO Standard ST.3). [4] For Japanese patent documents, the indication of the year of the reign of the Emperor must precede the serial number of the patent document. [5] Kind of document by the appropriate symbols as indicated on the document under WIPO Standard ST. 16 if possible. [6] Applicant is to place a check mark here if English language Translation is attached.

This collection of information is required by 37 CFR 1.97 and 1.98. The information is required to obtain or retain a benefit by the public which is to file (and by the USPTO to process) an application. Confidentiality is governed by 35 U.S.C. 122 and 37 CFR 1.14. This collection is estimated to take 2 hours to complete, including gathering, preparing, and submitting the completed application form to the USPTO. Time will vary depending upon the individual case. Any comments on the amount of time you require to complete this form and/or suggestions for reducing this burden, should be sent to the Chief Information Officer, U.S. Patent and Trademark Office, U.S. Department of Commerce, Washington, DC 20231. DO NOT SEND FEES OR COMPLETED FORMS TO THIS ADDRESS. **SEND TO: Commissioner for Patents, Washington, DC 20231.**

If you need assistance in completing the form, call 1-800-PTO-9199 (1-800-786-9199) and select option 2.

PTO/SB/08A (04-03)
Approved for use through 04/30/2003. OMB 0651-0031
U.S. Patent and Trademark Office; U.S. DEPARTMENT OF COMMERCE
Under the Paperwork Reduction Act of 1995, no persons are required to respond to a collection of information unless it contains a valid OMB control number.

Substitute for form 1449/PTO

INFORMATION DISCLOSURE STATEMENT BY APPLICANT

(Use as many sheets as necessary)

Sheet 2 of 2

Complete if Known	
Application Number	
Filing Date	Herewtih
First Named Inventor	Michael J. Schuster
Art Unit	
Examiner Name	
Attorney Docket Number	1008-100500

U. S. PATENT DOCUMENTS

Examiner Initials*	Cite No.[1]	Document Number Number-Kind Code[2] (if known)	Publication Date MM-DD-YYYY	Name of Patentee or Applicant of Cited Document	Pages, Columns, Lines, Where Relevant Passages or Relevant Figures Appear
		US- 5,245,710	09-21-1993	Haselswerdt et al.	
		US- 5,362,026	11-08-1994	Kobayashi et al.	
		US- 5,432,959	07-18-1995	Ellsworth et al.	
		US- 5,469,586	11-28-1995	Tsutsui et al.	
		US- 5,708,991	01-20-1998	DeMarco	
		US- 5,715,860	02-10-1998	Horad	
		US- 6,202,227 B1	03-20-2001	Gurowitz	
		US- 6,209,576 B1	04-03-2001	Davis	
		US- 6,263,519 B1	07-24-2001	Parsons et al.	
		US- 6,560,790 B2	05-13-2003	Saar et al.	
		US- 4,420,845	12-20-1983	Antunez	
		US-			
		US-			
		US-			
		US-			
		US-			
		US-			
		US-			
		US-			

FOREIGN PATENT DOCUMENTS

Examiner Initials*	Cite No.[1]	Foreign Patent Document Country Code[3]-Number[4]-Kind Code[5] (if known)	Publication Date MM-DD-YYYY	Name of Patentee or Applicant of Cited Document	Pages, Columns, Lines, Where Relevant Passages Or Relevant Figures Appear	T[6]

Examiner Signature		Date Considered	

*EXAMINER: Initial if reference considered, whether or not citation is in conformance with MPEP 609. Draw line through citation if not in conformance and not considered. Include copy of this form with next communication to applicant. [1] Applicant's unique citation designation number (optional). [2] See Kinds Codes of USPTO Patent Documents at www.uspto.gov or MPEP 901.04. [3] Enter Office that issued the document, by the two-letter code (WIPO Standard ST.3). [4] For Japanese patent documents, the indication of the year of the reign of the Emperor must precede the serial number of the patent document. [5] Kind of document by the appropriate symbols as indicated on the document under WIPO Standard ST. 16 if possible. [6] Applicant is to place a check mark here if English language Translation is attached.

This collection of information is required by 37 CFR 1.97 and 1.98. The information is required to obtain or retain a benefit by the public which is to file (and by the USPTO to process) an application. Confidentiality is governed by 35 U.S.C. 122 and 37 CFR 1.14. This collection is estimated to take 2 hours to complete, including gathering, preparing, and submitting the completed application form to the USPTO. Time will vary depending upon the individual case. Any comments on the amount of time you require to complete this form and/or suggestions for reducing this burden, should be sent to the Chief Information Officer, U.S. Patent and Trademark Office, U.S. Department of Commerce, Washington, DC 20231. DO NOT SEND FEES OR COMPLETED FORMS TO THIS ADDRESS. **SEND TO: Commissioner for Patents, Washington, DC 20231.**

If you need assistance in completing the form, call 1-800-PTO-9199 (1-800-786-9199) and select option 2.

PATENT APPLICATION FEE DETERMINATION RECORD
Effective October 1, 2003

Application or Docket Number: 10798606

CLAIMS AS FILED - PART I

	(Column 1)	(Column 2)
TOTAL CLAIMS	10	
FOR	NUMBER FILED	NUMBER EXTRA
TOTAL CHARGEABLE CLAIMS	10 minus 20=	* —
INDEPENDENT CLAIMS	3 minus 3 =	* —
MULTIPLE DEPENDENT CLAIM PRESENT		☐

* If the difference in column 1 is less than zero, enter "0" in column 2

SMALL ENTITY TYPE ☐		OR	OTHER THAN SMALL ENTITY	
RATE	FEE		RATE	FEE
BASIC FEE	385.00	OR	BASIC FEE	770.00
X$ 9=		OR	X$18=	
X43=		OR	X86=	
+145=		OR	+290=	
TOTAL	385	OR	TOTAL	

CLAIMS AS AMENDED - PART II

AMENDMENT A

	(Column 1)		(Column 2)	(Column 3)
	CLAIMS REMAINING AFTER AMENDMENT		HIGHEST NUMBER PREVIOUSLY PAID FOR	PRESENT EXTRA
Total	*	Minus	**	=
Independent	*	Minus	***	=
FIRST PRESENTATION OF MULTIPLE DEPENDENT CLAIM				☐

189

SMALL ENTITY		OR	OTHER THAN SMALL ENTITY	
RATE	ADDITIONAL FEE		RATE	ADDITIONAL FEE
X$ 9=		OR	X$18=	
X43=		OR	X86=	
+145=		OR	+290=	
TOTAL ADDIT. FEE		OR	TOTAL ADDIT. FEE	

AMENDMENT B

	(Column 1)		(Column 2)	(Column 3)
	CLAIMS REMAINING AFTER AMENDMENT		HIGHEST NUMBER PREVIOUSLY PAID FOR	PRESENT EXTRA
Total	*	Minus	**	=
Independent	*	Minus	***	=
FIRST PRESENTATION OF MULTIPLE DEPENDENT CLAIM				☐

RATE	ADDITIONAL FEE		RATE	ADDITIONAL FEE
X$ 9=		OR	X$18=	
X43=		OR	X86=	
+145=		OR	+290=	
TOTAL ADDIT. FEE		OR	TOTAL ADDIT. FEE	

AMENDMENT C

	(Column 1)		(Column 2)	(Column 3)
	CLAIMS REMAINING AFTER AMENDMENT		HIGHEST NUMBER PREVIOUSLY PAID FOR	PRESENT EXTRA
Total	*	Minus	**	=
Independent	*	Minus	***	=
FIRST PRESENTATION OF MULTIPLE DEPENDENT CLAIM				☐

RATE	ADDITIONAL FEE		RATE	ADDITIONAL FEE
X$ 9=		OR	X$18=	
X43=		OR	X86=	
+145=		OR	+290=	
TOTAL ADDIT. FEE		OR	TOTAL ADDIT. FEE	

* If the entry in column 1 is less than the entry in column 2, write "0" in column 3.
** If the "Highest Number Previously Paid For" IN THIS SPACE is less than 20, enter "20."
***If the "Highest Number Previously Paid For" IN THIS SPACE is less than 3, enter "3."
The "Highest Number Previously Paid For" (Total or Independent) is the highest number found in the appropriate box in column 1.

PATENT APPLICATION SERIAL NO. _____

U.S. DEPARTMENT OF COMMERCE
PATENT AND TRADEMARK OFFICE
FEE RECORD SHEET

03/16/2004 MDAMTE1 00000049 502425 10798606
01 FC:2001 385.00 DA

PTO-1556
(5/87)

*U.S. Government Printing Office: 2001 — 481-697/59173