April 23, 1963 E. H. BROWN 3,086,546

WATER SILENCING AND SAVING MEANS FOR BALL COCK VALVE ASSEMBLY IN TOILET FLUSH TANK

Filed March 6, 1959

Fig. 1.

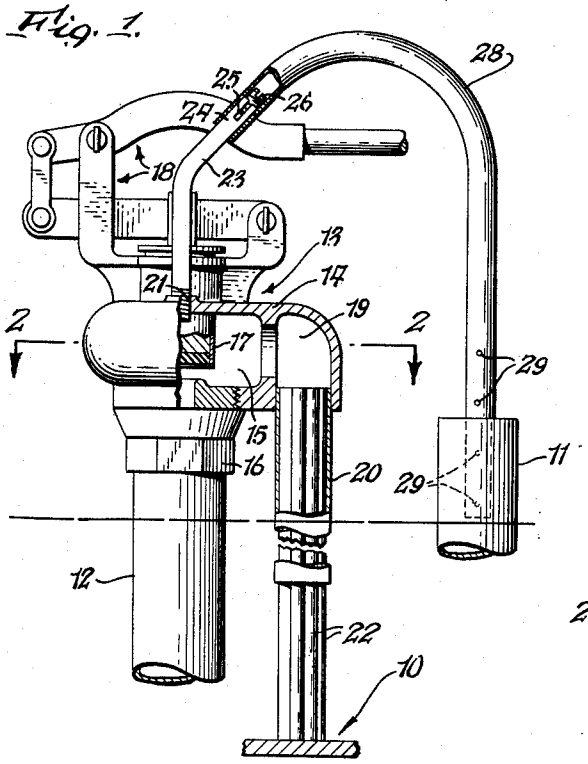

Fig. 2.

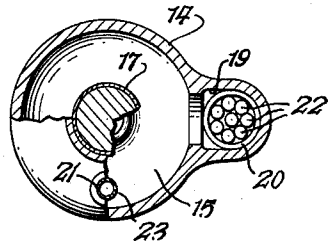

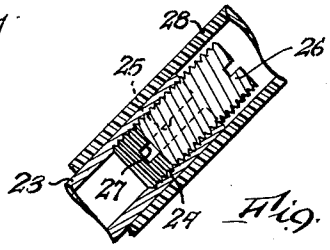

Fig. 3.

Fig. 5.

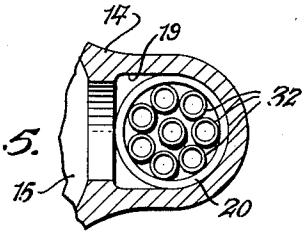

Fig. 4.

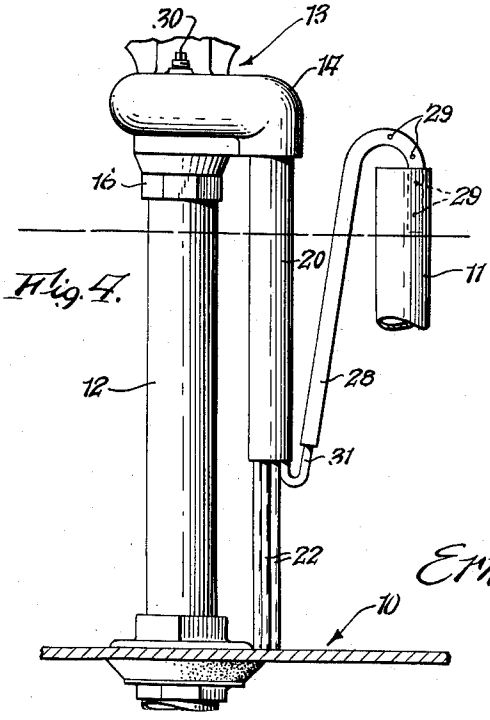

Fig. 6.

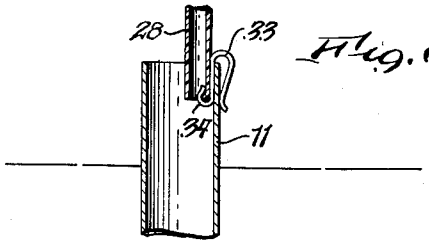

INVENTOR

Ernest Harold Brown

BY Popp and Sommer

ATTORNEY

United States Patent Office

3,086,546

Patented Apr. 23, 1963

1

3,086,546

WATER SILENCING AND SAVING MEANS FOR BALL COCK VALVE ASSEMBLY IN TOILET FLUSH TANK

Ernest Harold Brown, 105 Sherwood Ave., Hamburg, N.Y.

Filed Mar. 6, 1959, Ser. No. 797,619
7 Claims. (Cl. 137—436)

This invention relates to improved water silencing and saving means adapted to be attached to the conventional ball cock valve assembly found in toilet flush tanks for reducing turbulence and noise of the water flowing through the fill tube into the tank as well as the amount of water flowing through the overflow pipe into the toilet bowl, and thereby eliminate waste of such water.

The vast majority of toilets, whether new or old, have an upstanding float operated ball cock valve assembly for controlling the flow of the incoming water into the flush tank and toilet bowl such valve assembly includes a downwardly extending tube for filling the tank and a refill tube connecting the valve assembly with the overflow pipe for diverting a portion of the water directly to the toilet bowl, while the tank is refilling after each flush. This diversion of a portion of the water is employed to assure a good water seal in the bowl for protection against sewer gases.

Even though the tank fill tube may be long enough to remain below the lowest level of the water in the flush tank in order to somewhat diminish the turbulence and noise of the flow of water into the tank, there still remains a substantial amount of turbulence and noise in the assembly because of the irregularities in its internal surfaces, and the variations in the cross-sectional areas through which the water flows, plus the fact that the direction of flow of the incoming water is reversed in passing from the intake pipe through the valve assembly and then down through the fill tube. Furthermore, almost invariably more water is diverted into the toilet bowl through the refill and overflow pipes than is necessary, tests having shown that as high as 4,000 gallons or more per year may be wasted in this manner.

Accordingly, it is a primary object of this invention to provide improved water silencing and saving means adapted to be attached to the ball cock valve assembly for reducing turbulence and noise of the water flowing through the ball cock valve assembly into the flush tank as well as the amount of water flowing through the overflow pipe into the toilet bowl, and thereby eliminate waste of such water.

Another object of the invention is to provide an improved water silencing means comprising a plurality of elongated members adapted to be inserted into the fill tube throughout a substantial portion of its length for reducing the turbulence and noise of the water flowing through the valve assembly into the flush tank.

Another object of the invention is to provide an improved water silencing means comprising a plurality of flexible and elongated, solid rods and/or hollow tubes adapted to be inserted into the fill tube substantially throughout its length, for reducing turbulence and noise of the water flowing through the valve assembly into the flush tank.

Another object of the invention is to provide an improved water saving means adapted to be connected to the ball cock valve assembly and overflow pipe in place of the conventional, valveless refill tube and including tubular means having a restricted opening therein for reducing the amount of water flowing through the overflow pipe into the toilet bowl and thereby eliminate waste of such water.

Still another object of the invention is to provide an improved water saving means adapted to be connected

2

to the ball cock valve assembly and overflow pipe in place of the conventional, valveless refill tube and including tubular means having an adjustable metering valve providing a restricted opening therein for reducing the amount of water flowing through the overflow pipe into the toilet bowl, and thereby eliminate waste of such water.

A further object of the invention is to provide an improved water saving means adapted to be connected to the ball cock valve assembly and overflow pipe in place of the conventional, valveless refill tube and including tubular means having a restricted opening therein and adapted to be inserted into the fill tube for reducing the amount of water flowing through the overflow tube into the toilet bowl, and thereby eliminate waste of such water.

A still further object of the invention is to provide an improved anti-siphoning means adapted to be incorporated into the aforesaid water saving means for preventing formation of a vacuum therein and back flow of water from the flush tank into the toilet bowl, even though the flush valve is closed.

Additional objects and advantages of the invention will become apparent upon consideration of the following detailed description and the accompanying drawing, wherein:

FIG. 1 is a partial elevational view, partly in section, and illustrating a portion of a toilet flush tank having an upstanding overflow pipe, an upstanding intake pipe and a ball cock valve assembly mounted on the intake pipe, and to which assembly is attached one embodiment of the water silencing and saving means comprising the present invention;

FIG. 2 is a sectional view taken on line 2—2 of FIG. 1;

FIG. 3 is an enlarged, partial sectional view through the inventive water saving means of FIG. 1, illustrating the detailed construction of the metering valve incorporated therein;

FIG. 4 is a partial elevational view similar to FIG. 1, but illustrating another embodiment of the water silencing and saving means comprising the invention, wherein the metering valve is eliminated and the water saving means is inserted into the fill tube rather than attached to the valve casing of the ball cock valve assembly;

FIG. 5 is a partial sectional view through the ball cock valve assembly and illustrates a modification of the water silencing means shown in FIGS. 1 and 4, the solid rods therein being replaced by hollow tubes; and

FIG. 6 is a partial sectional view illustrating a modification of the anti-siphoning means which is incorporated in the water saving means of FIGS. 1 and 4, and which may be employed in addition to, or in place thereof.

Referring to the drawing, and in particular, FIG. 1, the toilet flush tank **10**, only the bottom portion of which is shown, is provided with an upstanding overflow pipe **11**, an upstanding intake pipe **12**, and a ball cock valve assembly mounted on pipe **12**, the assembly being generally indicated at **13**. The assembly is composed of a valve casing **14** having a main chamber **15**, an opening **16** communicating with pipe **12**, which opening is opened and closed by the usual reciprocating valve **17** in chamber **15**, the valve being actuated by the float operated linkage generally indicated at **18**. Casing **14** is also provided with an auxiliary chamber **19** for receiving the downwardly extending fill tube **20**, and main chamber **15** has a threaded opening **21** for receiving the usual refill tube (not shown), which is in turn connected to the overflow pipe **11**.

As will be apparent, whenever the toilet is flushed, the flush valve (not shown) opens, dropping the water level and lowering the float, whereby linkage **18** opens valve **17** to permit supply water to flow from pipe **12** into main

chamber **15** and to divide into two paths. The major portion of the water flows into the auxiliary chamber **19**, reversing direction and flowing downwardly into tank **10** through fill tube **20**. The remainder of the water within chamber **15** flows through opening **21** therein and eventually reaches overflow pipe **11**. As the water flows through assembly **13**, a substantial amount of turbulence and noise is created because of the irregular internal surfaces of the assembly, the variations in cross-sectional area through which the water flows, and the required reversal of direction of flow from pipe **12** to fill tube **20**. In addition, the conventional refill tube (not shown) permits an excess portion of the water to flow into overflow pipe **11**, and thence into the toilet bowl (not shown) for preventing sewer gases from escaping back out of the toilet bowl. This diversion of excess water is wasteful, tests having shown that for an average household of four persons, as much as 4,000 gallons or more per year may be wasted in this manner.

In order to overcome these problems created by the conventional construction described above, the present invention comprising improved water silencing and saving means was developed. As seen in FIG. 1, one embodiment of the water silencing means comprises a plurality of flexible and elongated, round solid rods **22** which are preferably made of a plastic material such as nylon. The rods are preferably about 3/32" in diameter, and are of such a length that when packed side by side into fill tube **20**, they preferably extend substantially throughout its length and rest on the bottom of the tank. Because of their flexibility, the rods **22** may be readily bent to facilitate their insertion into tube **20**, without disturbing this tube or any other part of the valve assembly **13**, and in a typical installation using a 5/16" inside diameter fill tube, approximately 8 rods are required. When so installed, rods **22** effectively reduce the turbulence and noise of the water flowing through the assembly, as they reduce the rate of flow therethrough, spread the pressure drop gradually over substantially the entire length of relatively long tube **20**, and convert the type of flow from turbulent to substantially laminar, the water being restricted to the straight line passages or interstices formed between the various rods **22**, as well as between the rods and the interior of tube **20**.

As also illustrated in FIG. 1, one embodiment of the improved water saving means comprises tubular means including an externally threaded and relatively short adapter tube **23** engaged within opening **21** at one end and provided at its other end with an internally threaded portion **24** having a pair of diametrically opposed slots **25**, for threadedly receiving a set screw **26** or the like. The slotted portion **24** of adapter tube **23** and the set screw **26** form an adjustable metering valve for confining the flow of water through the restricted opening **27** formed between the slots **25** of portion **24** and the end of set screw **26**. The tubular means also includes a relatively long flexible tube **28** which is preferably made of a plastic material such as clear polyvinyl chloride, and one end of this tube is adapted to slide snugly over the slotted portion **24** of adapter tube **23**, but fit freely over screw **26** to permit passage of the water flowing through opening **27** and slots **25**, while the other end of tube **28** is adapted to fit within the upper end of overflow pipe **11**. By properly adjusting screw **26** in slotted portion **24**, the amount of water flowing into the toilet bowl (not shown) through overflow pipe **11** can be reduced to the necessary minimum for preventing sewer gases from escaping back out of the toilet bowl, and at the same time eliminate waste of such water normally experienced with the conventional valveless refill tube (not shown).

The improved water saving means is also provided with an anti-siphoning means in order to prevent a vacuum from forming therein and back flow of water from the tank **10** through the ball cock valve assembly **13**, tubular means, overflow pipe **11** and into the toilet bowl, in order to prevent further waste of water. As will be apparent, if the end of tube **28** inserted into pipe **11** lies below the water level in tank **10**, the water in the tank will siphon back up fill tube **20**, through assembly **13**, tube **28** and overflow pipe **11** into the toilet bowl. Thus, even when the toilet is not being flushed, the continual dropping of the water in the tank would cause ball cock valve **17** to open in order to replenish the water wasted by the aforesaid siphoning action. In order to prevent this, an anti-siphoning means is provided, and as shown in FIG. 1, it preferably takes the form of a plurality of longitudinally spaced openings **29** located adjacent the end of flexible tube **28** connected to overflow pipe **11**. Thus, even though the open end of tube **28** might lie below the tank water level, one or more of these openings will be above the water level and effectively break any vacuum in tube **28**.

Referring now to FIG. 4, another embodiment of the water silencing and saving means comprising the invention is illustrated therein. In this embodiment, the opening **21** in main chamber **15** is closed by a plug **30**, and the improved water saving means is inserted into the fill tube **20** together with the water silencing rods **21**. The preferred form of this water saving means differs from that illustrated in FIG. 1 in that adapter tube **23**, and the slotted portion **24** and set screw **26** forming the metering valve are completely eliminated, and replaced by a smaller tube **31** forming the desired restricted opening. This relatively short tube **31** is bent into a substantially U-shape, and one end is inserted into fill tube **20**, being held securely in place therein by the water silencing rods **21**. The other end of U-shaped tube **31** is inserted into the relatively long flexible tube **28** which is connected to the overflow pipe **11**, as in FIG. 1.

As will be apparent, the U-shaped tube **31** provides a restricted opening for the water saving means, which opening is much smaller than that found in the conventional valveless refill tube (not shown), in order to accomplish substantially the same results as the adapter tube **23** and the metering valve formed by slotted portion **24** and set screw **26** of FIG. 1, albeit lacking their feature of adjustability.

Referring to FIG. 5, there is illustrated therein a modification of the water silencing means shown in FIGS. 1 and 4. Instead of using solid rods **21**, hollow tubes **32** may be used, or a combination of such rods and tubes may be used, if so desired. Preferably, tubes **32** are of substantially the same size and shape as rods **21** and are preferably made of the same plastic material. The tubes **32** are particularly adapted for low pressure water systems, whereas the solid rods **21** are especially adapted for use in systems of high pressure. Thus, in a low pressure system, the rods **21** might so restrict the rate of flow of the water into tank **10** as to require an unduly long period for filling the tank. Thus, their complete or partial replacement by the hollow tubes **32** will substantially reduce the turbulence and noise created by the flow of water through fill tube **20**, without unduly restricting the flow, as the water can also flow through the holes in the tubes as well as through the interstices formed therebetween.

Referring now to FIG. 6, there is illustrated therein a modification of the anti-siphoning means shown in FIGS. 1 and 4. This modification preferably takes the form of a U-shaped clip **33** adapted to fit snugly over the upper end of overflow pipe **11** and which clip is provided with a small hook **34** at one end for snugly receiving the adjacent end of flexible tube **28**. It will be noted that the overflow pipe **11** is designed so as to always extend above the highest level of the water in the tank. Thus, some anti-siphoning means must be provided above this water level to prevent the formation of a vacuum in the flexible

tube **28** and undesirable back flow of water from the tank through the valve assembly **13**, water saving means and overflow pipe **11** into the toilet bowl. This is most economically accomplished by providing the plurality of holes **29** near the end of tube **28** inserted into overflow pipe **11**, as illustrated in FIGS. 1 and 4. The anti-siphoning clip **33** of FIG. 6 however, which may be used in conjunction with or in place of holes **29**, provides a positive means for keeping the open end of tube **28** above this high water level, whereas the uppermost hole **29** of FIGS. 1 and 4 might possibly slip below the high water level in the event tube **28** was not cut short enough to prevent this occurrence.

While at first, it might be considered feasible to employ either the water silencing or saving means separately, as a practical matter it is necessary to employ both of these means in order to obtain the desired result. For example, if the rods **22** or tubes **32** were employed alone in order to reduce water turbulence and noise, they obviously would create a back pressure in valve casing **14** as a result of which the rate of flow through the conventional refill tube (not shown) would be substantially increased, thereby causing further waste of such water, as well as additional noise offsetting the silencing action in the assembly. On the other hand, if the water saving means were used alone, this would also create an undesirable back pressure, especially in the embodiment shown in FIG. 1, thereby increasing the rate of flow through the assembly and causing more turbulence and noise than normal. While the embodiment of the water saving means illustrated in FIG. 4 woud not, in itself, create an undesirable amount of back pressure, because of its location in fill tube **20**, the plugging up of opening **21** would nevertheless increase the rate of flow through the assembly and hence create more undesirable water turbulence and noise than normal.

It will now be seen how the above described embodiments accomplish the various objects of the invention, and the numerous advantages obtained thereby are now apparent. While only several embodiments of the invention have been described, it is to be understood that various modifications and changes may be made therein by those skilled in the art without departing from the spirit of the invention, the scope of which is to be determined by the appended claims.

I claim:

1. In a toilet flush tank having a water intake pipe and a ball cock valve assembly mounted on said pipe, said assembly including a downwardly extending tube for filling said tank, the combination therewith of improved water silencing means comprising a plurality of flexible elongated members inserted side by side into said tube substantially throughout its length and having their lower ends resting on the bottom of said tank, for reducing turbulence and noise of the water flowing through said assembly into said tank.

2. The combination of claim 1 wherein said members are in the form of solid rods.

3. The combination of claim 1 wherein said members are in the form of hollow tubes.

4. In a toilet flush tank having an upstanding water overflow pipe connected to the toilet bowl, a water intake pipe and a ball cock valve assembly mounted on said intake pipe, said assembly including an opening for connection to said overflow pipe and a downwardly extending tube for filling said tank, the combination therewith of improved water silencing means comprising a plurality of flexible elongated members inserted side by side into said tube substantially throughout its length and having their lower ends resting upon the bottom of said tank, for reducing turbulence and noise of the water flowing through said assembly into said tank, and improved water saving means comprising tubular means having a restricted opening therein and being connected at one end to said opening in said assembly and at its other end to said overflow pipe, for reducing the amount of water flowing through said overflow pipe and thereby eliminate waste of such water.

5. The combination of claim 4 wherein said tubular means includes a relatively short tubular member having said restricted opening therein and removably connected at one end to said opening in said assembly, and a relatively long and flexible tubular member removably connected at one end to the other end of said short tubular member and at its other end to said overflow pipe.

6. The combination of claim 5 wherein said valve assembly also includes a valve casing providing said opening therein, and said short tubular member has an adjustable metering valve providing said restricted opening therein.

7. The combination of claim 5 wherein said downwardly extending tank filling tube provides said opening in said valve assembly, said short tubular member is substantially U-shaped, and said one end thereof is inserted into said downwardly extending tube alongside said flexible members.

References Cited in the file of this patent

UNITED STATES PATENTS

Re. 22,727	Svirsky	Feb. 26, 1946
1,078,584	Jones	Nov. 11, 1913
1,671,361	Frankenberger	May 29, 1928
1,901,633	Clemmons	Mar. 14, 1933
2,044,816	Schmiedeknecht	June 23, 1936
2,195,797	Groeniger	Apr. 2, 1940
2,277,878	Morris	Mar. 31, 1942
2,722,229	Wentz	Nov. 1, 1955
2,722,944	Langdon	Nov. 8, 1955
2,743,459	Schmidt	May 1, 1956

FOREIGN PATENTS

101,245	Sweden	Apr. 1, 1941
542,826	Germany	Jan. 28, 1932