US005862538A

United States Patent [19]

Ho

[11] **Patent Number: 5,862,538**

[45] **Date of Patent: Jan. 26, 1999**

[54] **TOILET FLUSHING DEVICE**

[76] Inventor: **Chung-Yi Ho**, 2f, No. 1-1, Alley 49, Lane.101, Ching-Shan Rd., Shih-Lin Dist., Taipei City, Taiwan

[21] Appl. No.: **975,184**

[22] Filed: **Nov. 20, 1997**

[51] **Int. Cl.**[6] **E03D 1/36**

[52] **U.S. Cl.** **004/366**; 4/331; 137/441; 137/625.048; 137/881

[58] **Field of Search** 4/366, 367, 329, 4/332; 137/881, 625.48, 441, 423

[56] **References Cited**

U.S. PATENT DOCUMENTS

3,086,217 4/1963 Barlow 4/367
4,318,194 3/1982 Pinkston 4/366
4,420,845 12/1983 Antunez 4/366
4,996,726 3/1991 Schrock et al. ..... 4/366 X
5,175,894 1/1993 Chen 4/331

Primary Examiner—Henry J. Recla
Assistant Examiner—Kathleen J. Prunner
Attorney, Agent, or Firm—Baker & Botts, L.L.P.

[57] **ABSTRACT**

A toilet flushing device is to be installed in a water supply tank and has a diverter valve which permits the supply of high pressure water to the rim flushing conduit of a toilet bowl when the toilet bowl is flushed. The diverter valve has a valve housing and a valve rod disposed movably in the valve housing in response to increase or decrease of the water level. A passage is formed longitudinally through the valve rod so as to direct high pressure water to the water supply tank, thereby preventing fouling formation in the passage of the valve rod.

5 Claims, 10 Drawing Sheets

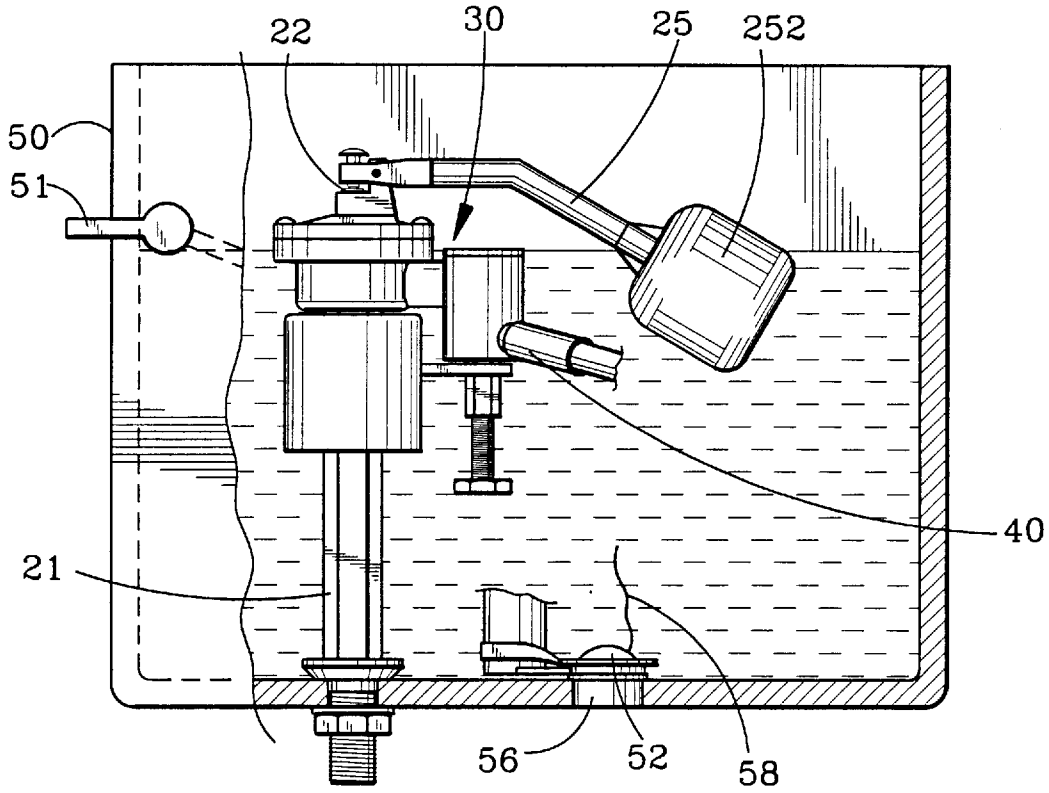

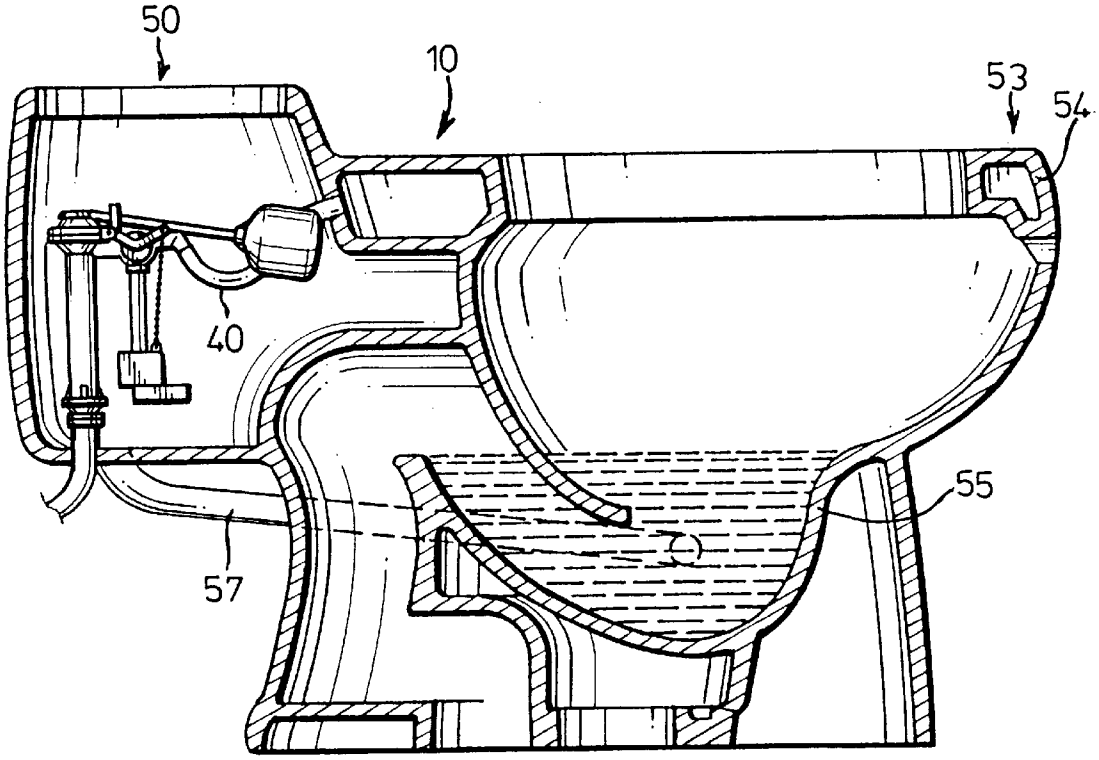

FIG. 1

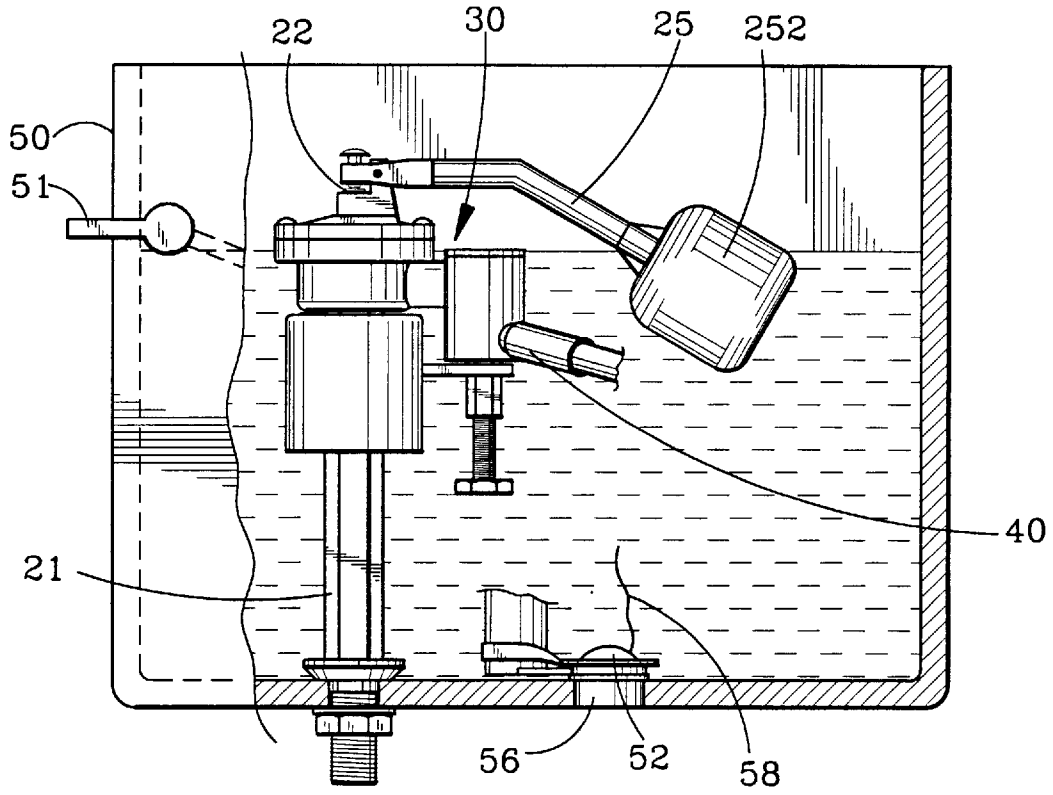

FIG.2

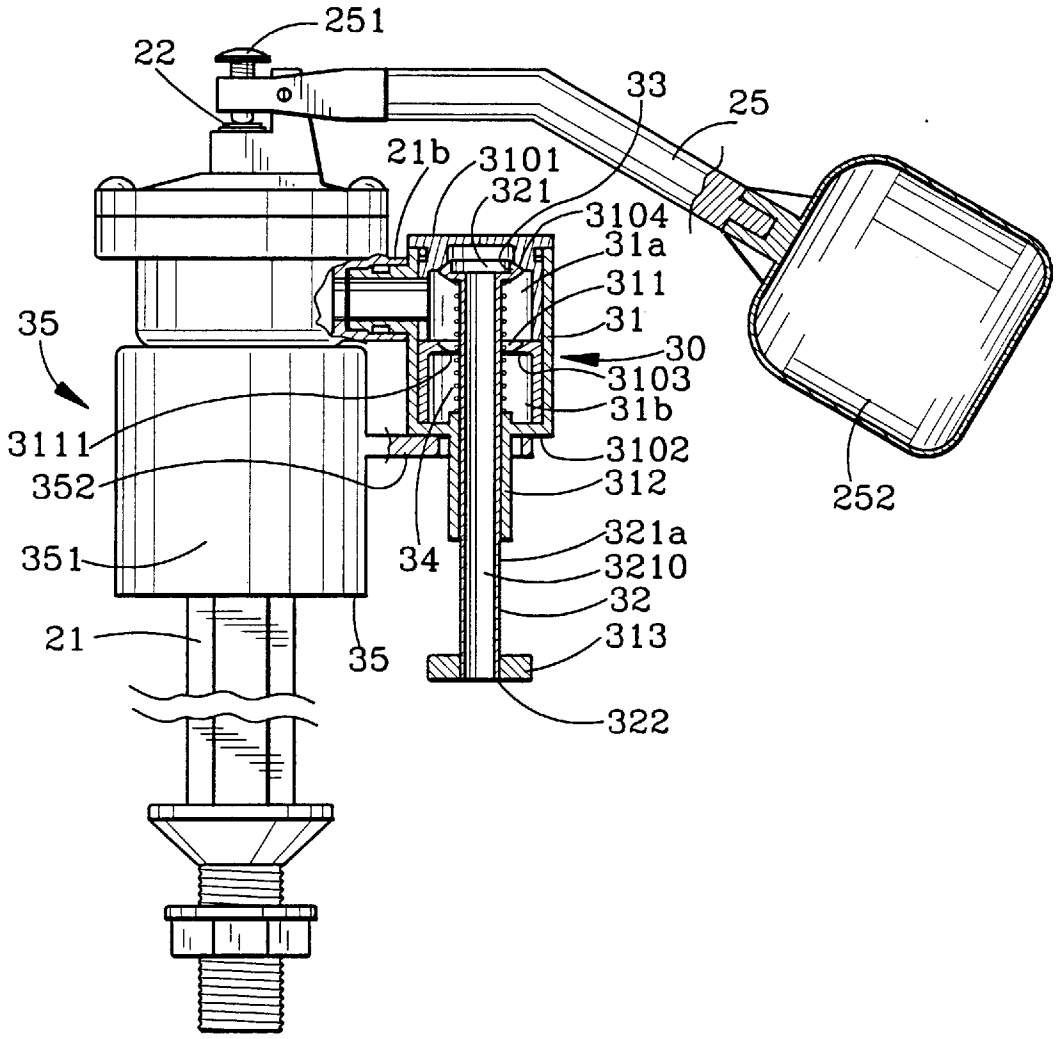
251
22
33
25
21b
3101
321
3104
31a
311
31
30
3103
31b
3102
312
321a
3210
32
313
322
35
3111
352
351
21
34
35
252

FIG.3

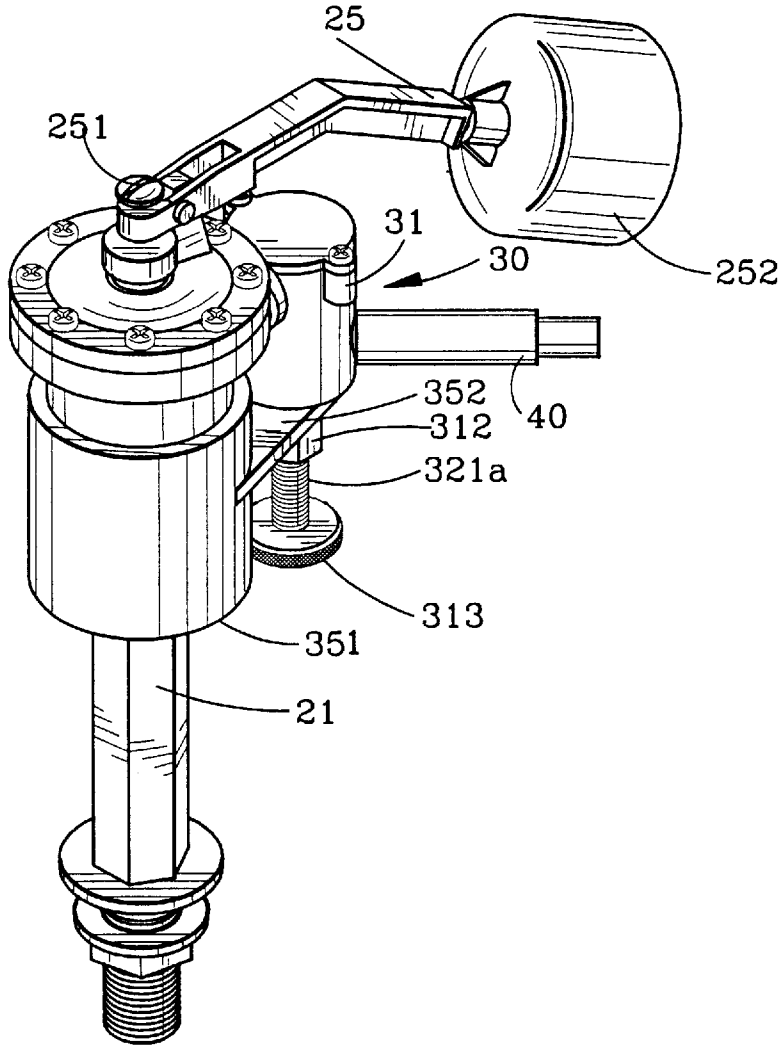

FIG.4

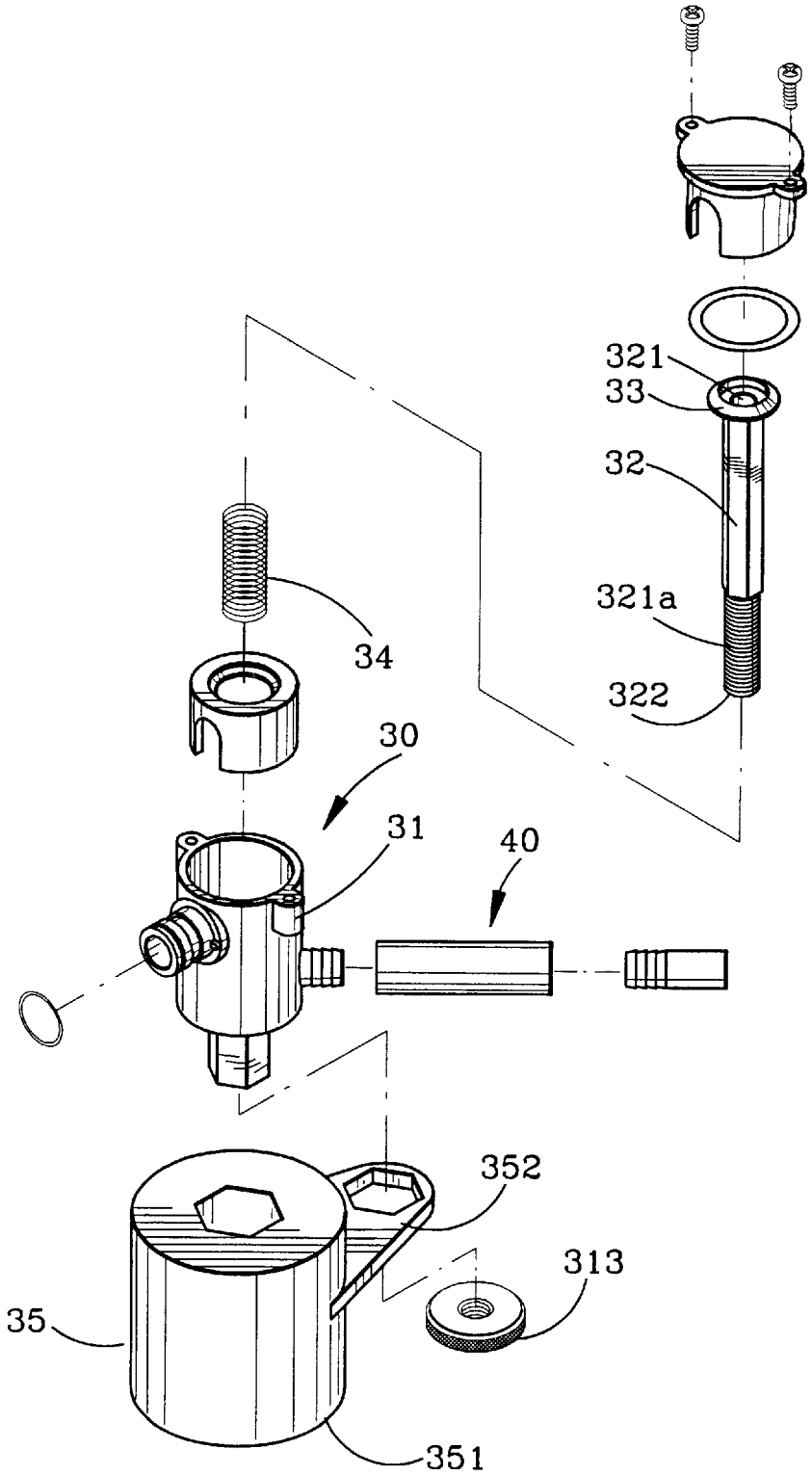

FIG.5

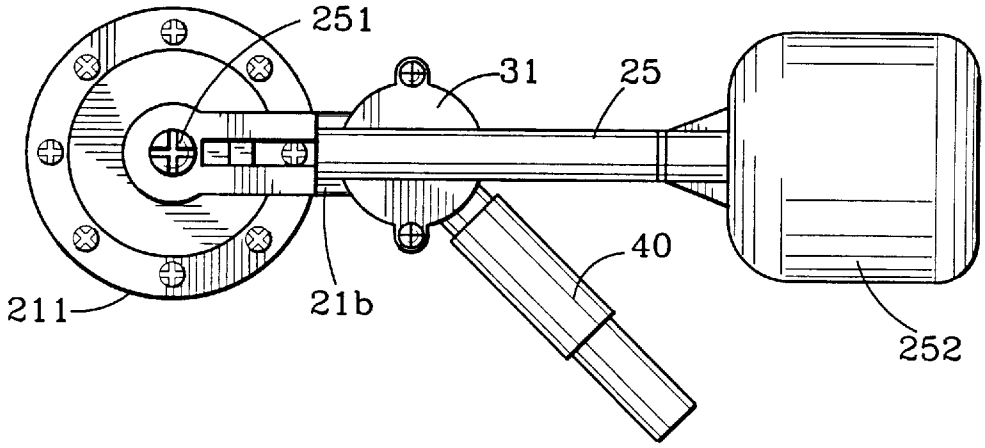

FIG.6

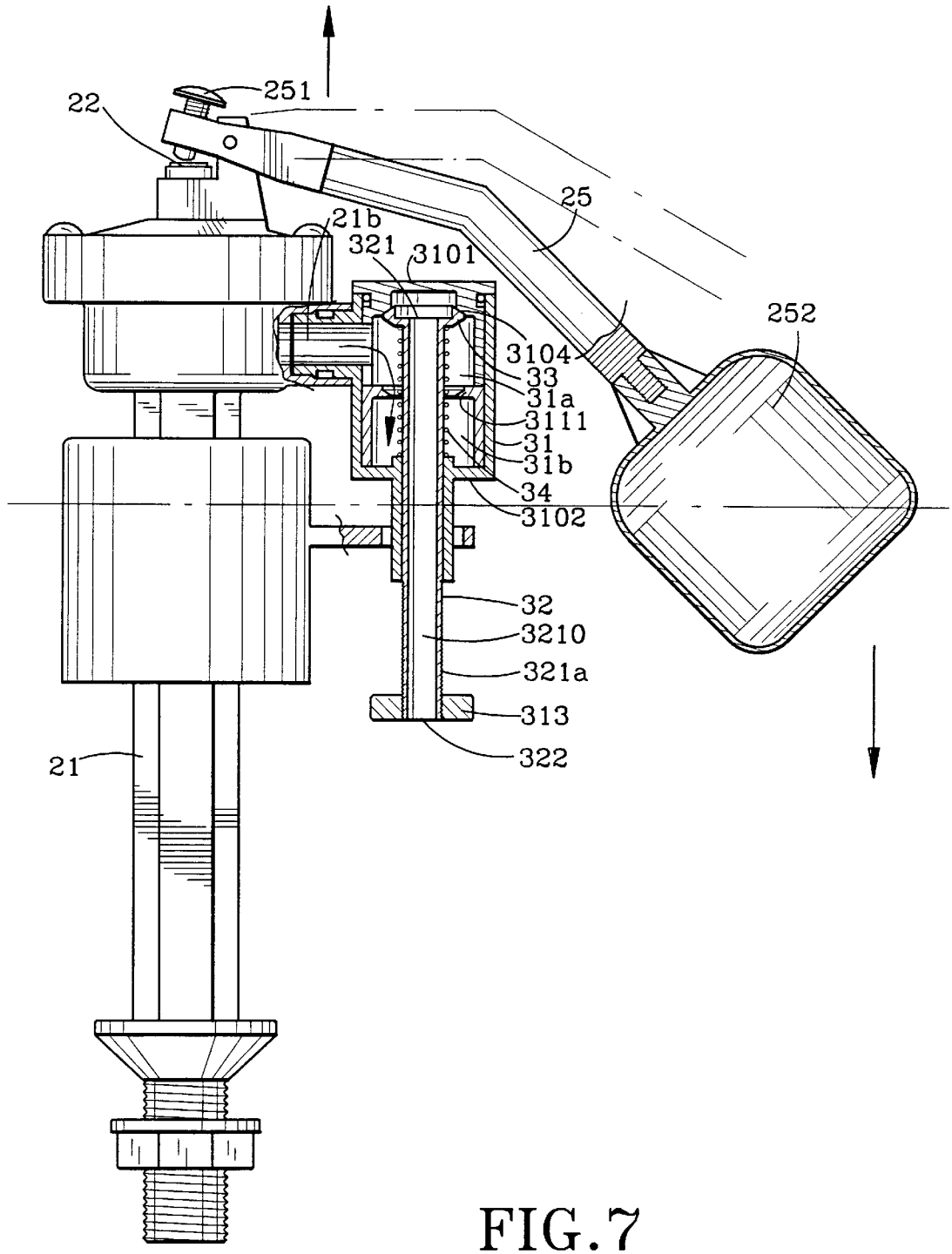
22
251
25
21b
321
3101
252
3104
33
31a
3111
31
31b
34
3102
32
3210
321a
313
322
21

FIG. 7

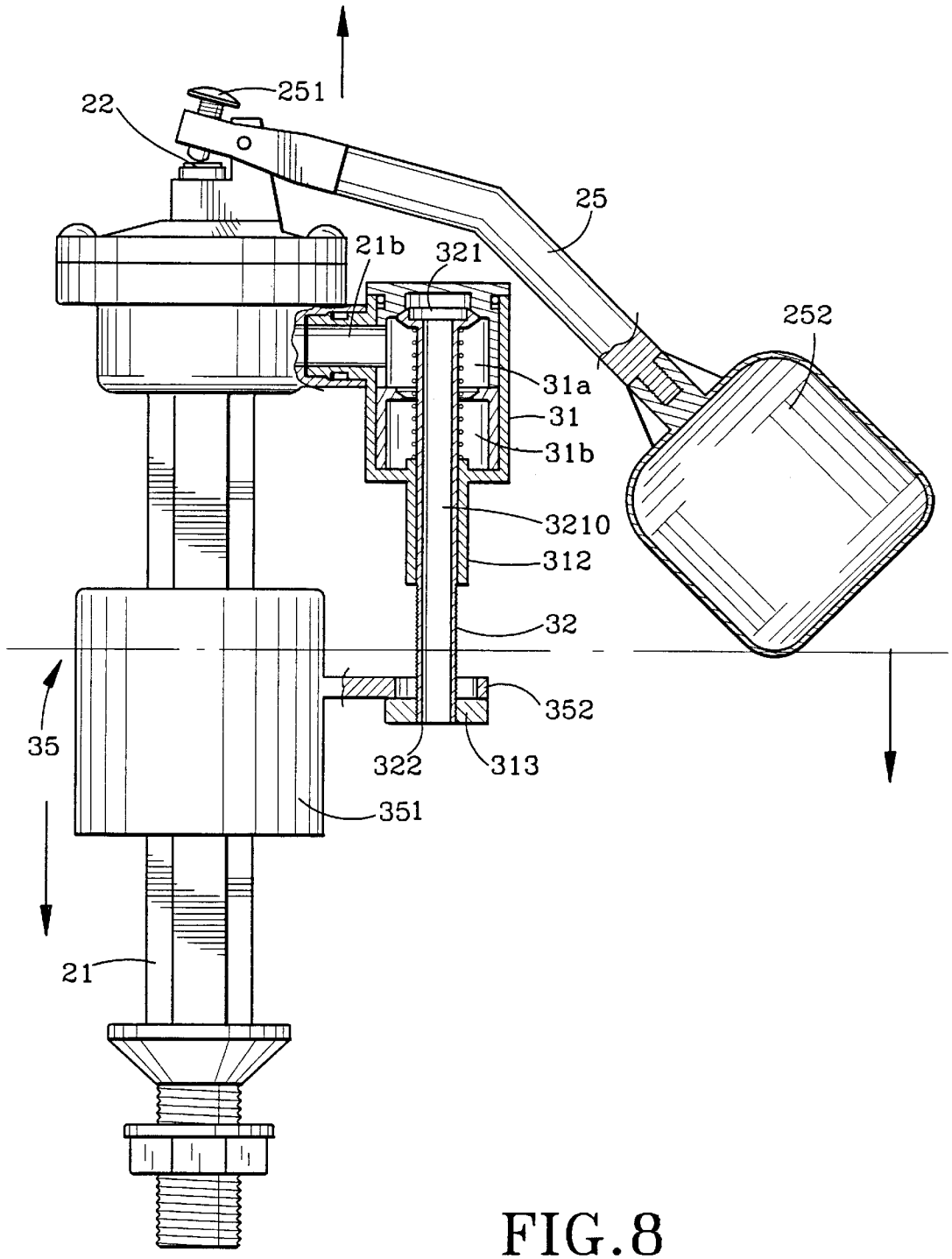

FIG.8

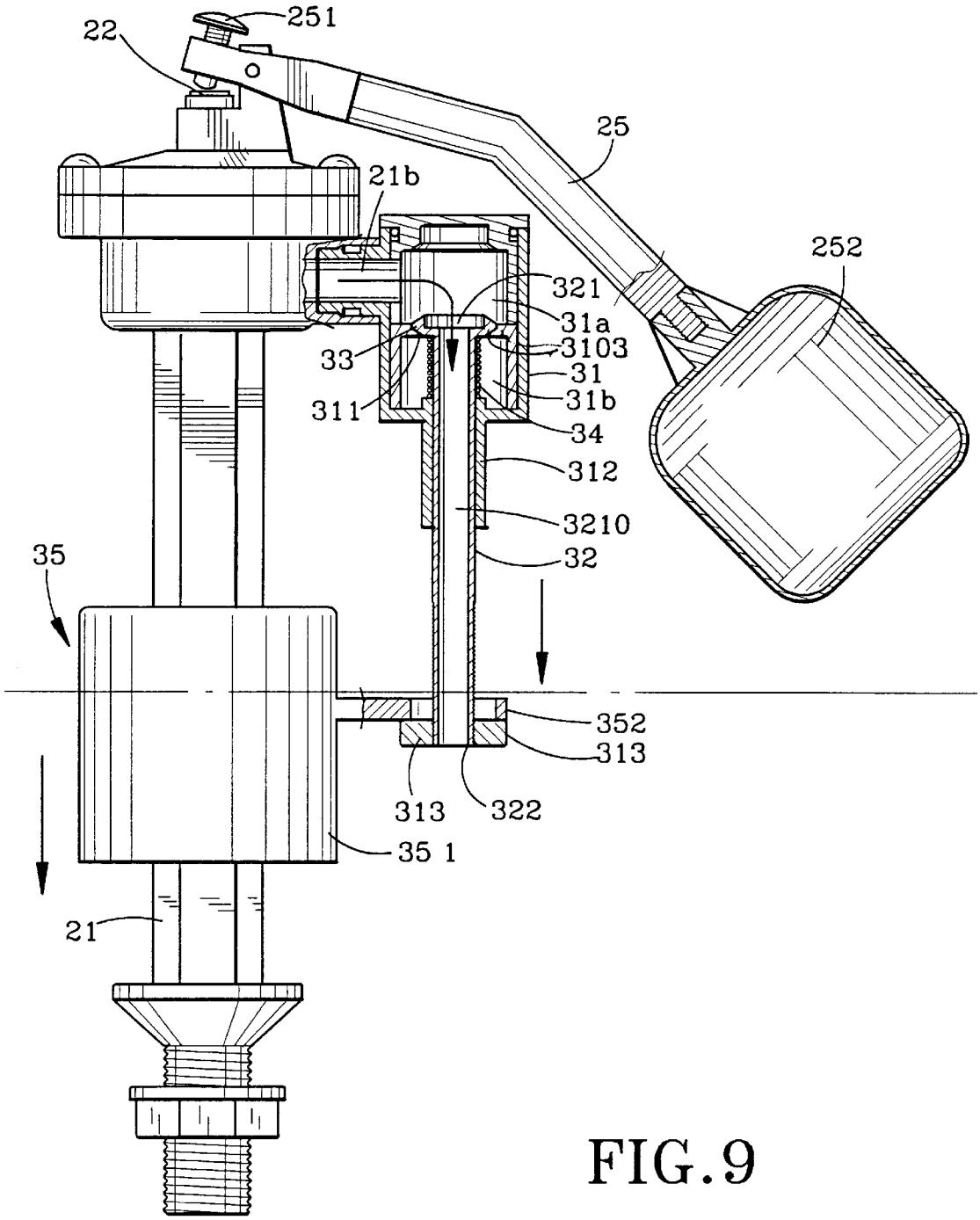
251
22
25
21b
252
321
31a
3103
33
31
31b
311
34
312
3210
35
32
352
313
313
322
35 1
21

FIG. 9

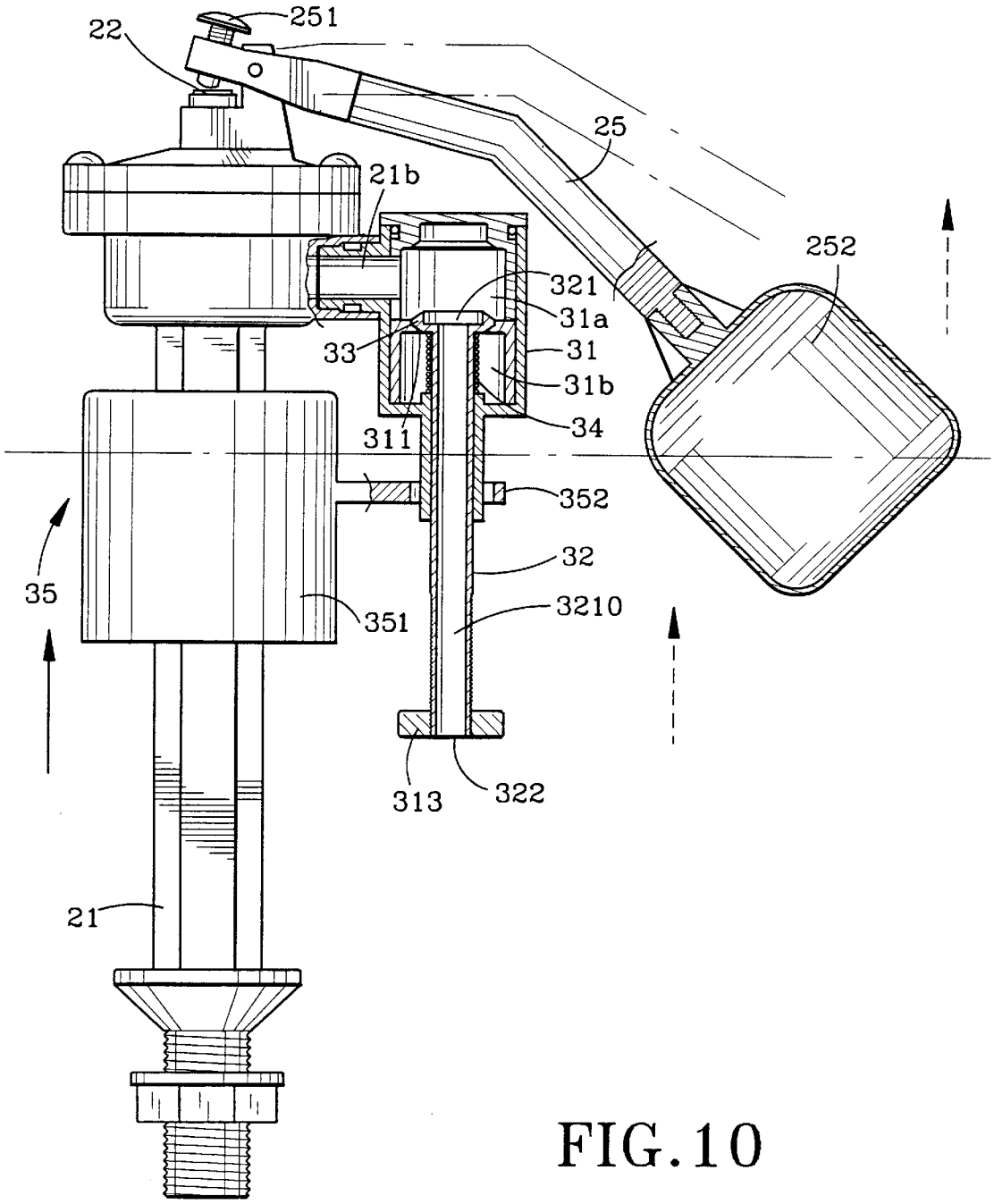
251
22
25
21b
252
321
31a
33
31
31b
34
311
352
32
35
3210
351
313
322
21

FIG. 10

TOILET FLUSHING DEVICE

BACKGROUND OF THE INVENTION

1. Field of the Invention

This invention relates to a toilet flushing device, more particularly to a toilet flushing which has a diverter valve unit for directing water from the water supplying pipe to the rim flushing conduit of a toilet bowl.

2. Description of the Related Art

U.S. Pat. No. 5,175,894 discloses a toilet flushing device which has a diverter valve that permits the supply of high pressure water to the rim flushing conduit of a toilet bowl when the toilet bowl is flushed. The diverter valve has a flap rotatably provided inside a hollow valve housing for controlling water flow from the water supplying pipe. However, the rotation of the flap is often prevented by the water fouling that forms on the rotation axle of the flap, thereby resulting in malfunction of the toilet flushing device.

SUMMARY OF THE INVENTION

The object of the present invention is to provide a toilet flushing device which can overcome the problem that is in associated with the aforementioned toilet flushing device of the prior art.

Accordingly, the preferred embodiment of a toilet flushing device of the present invention is to be installed in a toilet bowl assembly with a water supply tank and a toilet bowl having a rim-flushing conduit and a neck portion. The toilet flushing device includes a water supplying pipe extending into the water supply tank and having a lower end connected to an external pressurized water source; float-controlled valve means provided on an upper end of the water supplying pipe to control water to flow from the water supplying pipe to the water supply tank; manually operated flush valve means for discharging water inside the water supply tank to the neck portion of the toilet bowl; and diverter valve means for communicating fluidly the water supplying pipe and the water supply tank. The diverter valve means includes a hollow valve housing, a transverse inlet pipe which receives water from the water supplying pipe, and a transverse supply line connected to and supplying water to the rim flushing conduit of the toilet bowl.

The valve housing has top and bottom walls, a transverse partition wall between the top and bottom walls, and upper and lower chambers divided by the partition wall. The partition wall has an opening and a first valve seat confining the opening. The inlet pipe and the supply line are communicated respectively with the upper and lower chambers. The valve housing further has communication means for interconnecting the upper chamber and the water supply tank.

The diverter valve means further has a valve rod with upper and lower ends. The upper end of the valve rod extends into the upper chamber and is provided with a valve member. The lower end extends out of the valve housing. The valve rod passes through the opening of the partition wall without sealing the opening and extends sealingly through the bottom wall. The valve rod is normally biased upward so as to move the valve member away from the first valve seat, thereby permitting water from the inlet pipe to flow from the upper chamber to the lower chamber by passing through the opening around the valve rod and then to the supply line.

The diverter valve means further has a float member which is connected movably to the valve rod and which is movable downward, in response to a decrease in the water level inside the water supply tank when the flush valve means is operated, to pull down the valve rod, thereby moving the valve member downward to the first valve seat and interrupting communication between the upper and lower chambers and permitting water from the inlet pipe to flow through the communicating means to refill the water supply tank.

The high pressure water from the inlet pipe can wash the communicating means when flowing through the same, thereby preventing fouling formation in the communication means.

BRIEF DESCRIPTION OF THE DRAWINGS

Other features and advantages of the present invention will become apparent in the following detailed description of a preferred embodiment of the invention, with reference to the accompanying drawings, in which:

FIG. **1** illustrates the preferred embodiment of a toilet flushing device according to the present invention when installed in a toilet bowl assembly;

FIG. **2** is a partly sectional view of the toilet flushing device of the present invention when in a normal state;

FIG. **3** is a partly sectional view of the diverter valve means of the toilet flushing device of the present invention when the latter is in the normal state;

FIG. **4** is a perspective view of the toilet flushing device of the present invention when in the normal state;

FIG. **5** is an exploded view of the diverter valve means of the toilet flushing device according to the present invention;

FIG. **6** is a top view of the toilet flushing device in FIG. **3**;

FIG. **7** a partly sectional view illustrating the float-controlled valve means in the water supply tank when actuated to permit water from the water supplying pipe to flow into the valve diverter means;

FIG. **8** is a partly sectional view illustrating the float member of the valve diverter means when it begins to pull the valve rod downward;

FIG. **9** is a partly sectional view illustrating the float member of the diverter valve means when moved to the lowermost position; and

FIG. **10** is illustrates the float member of the diverter valve means when moved upward to disengage the valve rod.

DETAILED DESCRIPTION OF THE PREFERRED EMBODIMENT

Referring to FIGS. **1** and **2**, the preferred embodiment of a toilet flushing device according to the present invention is shown to be installed in a toilet bowl assembly **10**. The toilet bowl assembly **10** includes a water supply tank **50** and a toilet bowl **53** having a rim flushing conduit **54** and a neck portion **55**. A water supplying pipe **21** extends into the water supply tank **50** and has a lower end connected to an external pressurized water source and an upper end provided with a conventional ball-cock valve **22**. A rod **25** connects the ball-cock valve **22** to a main float **252**. The water supply tank **50** is provided with a discharge outlet **56**. A flapper valve **52** normally closes the discharge outlet **56**, and has one end hinged to the water supply tank **50**. The other end of the flapper valve **52** is tied to an actuating arm of a conventional flush arm **51**, which is mounted on the exterior of the tank **50** by means of a chain or cable **58**. The flush handle **51** is operated so as to lift the flapper valve **52** to allow water in

the tank **50** to flow through the discharge outlet **56**. A discharge pipe **57** directs water flowing through the discharge outlet **56** to the neck portion **55** of the toilet bowl **53** in a conventional manner. As the water level in the tank **50** drops, the main float **252** will be lowered, thereby opening the ball-cock valve **22**. Water from the water supplying pipe **21** is directed to diverter valve means **30** of the toilet flushing device, which communicates fluidly the water supplying pipe **21** and the water supply tank **50**, so as to refill the tank **50** until the normal water level is reached, whereupon the main float **252** closes the ball-cock valve **22**.

Referring to FIGS. **1**, **3**, **4**, **5** and **6**, the diverter valve means **30** of the present invention includes a hollow valve housing **31**, a transverse inlet pipe (**21***b*) which receives water from the water supplying pipe **21**, and a transverse supply line **40** connected to and supplying water to the rim flushing rim conduit **54**.

The valve housing **31** is substantially cylindrical in shape and has top and bottom walls **3101**, **3102**, a transverse partition wall **3103** between the top and bottom walls **3101**, **3102**, and upper and lower chambers (**31***a*, **31***b*) divided by the partition wall **3103**. The partition wall **3103** has an opening **311** and a first valve seat **3111** confining the opening **311**. The inlet pipe (**21***b*)and the supply line **40** are communicated respectively with the upper and lower chambers (**31***a*, **31***b*). The valve housing **31** further has communication means for interconnecting the upper chamber (**31***a*) and the water supply tank **50**, which will be described below.

Referring to FIGS. **3** and **5**, the diverter valve means **30** further has a valve rod **32** with upper and lower ends **321**, **322**, and a passage **3210** which extends longitudinally through the valve rod **32** and which serves as the communicating means. Alternatively, the communicating means may be a hole formed in the top wall of the valve housing **31** when the valve rod **32** is formed as a solid rod. The upper end **321** of the valve rod **32** extends into the upper chamber (**31***a*) and is provided with a valve member **33**. The lower end **322** extends out of a bottom extension tube **312** of the valve housing **31**. The valve rod **32** passes through the opening **311** of the partition wall **3103** without sealing the opening **311** and extends sealingly through the extension tube **312** on the bottom wall **3102**. A threaded portion (**321***a*) is provided adjacent to the lower end **322** of the valve rod **32**. A nut **313** engages the threaded portion (**321***a*). The top wall **3101** of the valve housing **31** has a second valve seat **3104** formed therein. The valve rod **32** has a spring member **34** sleeved therearound between the valve member **33** and the bottom wall **3102**. The spring member **34** biases normally the valve rod **32** upward so as to move the valve member **33** away from the first valve seat **3111** and to seat the valve member **33** against the second valve seat **3104**.

Referring to FIGS. **3**, **4** and **5**, the diverter valve means **30** further has a float member **35** having a float body **351** sleeved on the water supplying pipe **21**, and a transverse plate **352** which extends from the float body **351**. The extension tube **312** and the valve rod **32** extend slidably through the transverse plate **352**. However, the float member **35** may be sleeved directly on the extension tube **312** and the valve rod **32** without using the aforementioned extension plate **352**.

Referring to FIGS. **2** and **7**, when the tank **50** is initially full, the float member **35** floats along the water line and does not exert any pulling force on the cable **58**. The valve member **33** abuts against the second valve seat **3104** due to the upward spring force of the spring member **34**. When the flush handle **51** is operated, the flapper valve **52** is lifted so as to allow water in the tank **50** to flow through the discharge outlet **56** and into the neck portion **55** of the toilet bowl **53**. As the water level in the tank **50** drops, the main float **252** and the float member **35** are lowered, thereby opening the ball-cock valve **22**. High pressure water from the water supplying pipe **21** enters the diverter valve means **30** and is directed to the supply line **40**. High pressure water thus enters the rim flushing conduit **54**, thereby effectively rinsing the inner wall of the toilet bowl **53**.

Referring to FIG. **8**, as the water level in the tank **50** continues to gradually decrease, the extension plate **352** of the float member **35** moves downward and eventually engages the nut **313** and pulls the valve rod **32** to move downward against the spring force of the spring member **34** so as to permit the valve member **33** to seat on the first valve seat **3111**, as best illustrated in FIG. **9**. The water from the inlet pipe (**21***b*) then flows into the passage **3210** of the valve rod **32** so as to refill the tank **50**. Preferably, a clearance (not shown) is formed between the valve member **33** and the first valve seat **3111** when the valve member **33** is seated on the first valve seat **3111** so that a large portion of water from the inlet pipe (**21***b*) flows into the tank **50** via the valve rod **32** while a small portion of water enters the supply line **40** via the clearance to refill the toilet bowl **53**. The length of time during which the valve rod **32** is pulled by the float member **35** can be adjusted by rotating the nut **313** on the threaded portion (**321***a*), thereby varying the distance between the extension plate **352** of the float member **35** and the nut **313**. More water flows into the supply line **40** when the nut **313** is moved upward to a higher position with respect to the lower end **322** of the valve rod **32**. Accordingly, less water flows through the supply line **40** when the nut **313** is moved to a lower position with respect to the lower end **322** of the valve rod **32**.

Referring to FIG. **10**, as the water level in the tank **50** rises, the main float **252** and the float member **35** gradually move upward. At this stage, the float member **35** disengages the nut **313**, and the valve member **33** remains seated on the first valve seat **3111** due to the high water pressure exerted on the valve member **33**. The valve rod **32** moves upward to permit the valve member **33** to abut against the second valve seat **3104** due to the restoring force of the spring member **34** when the main float **252** closes the cock-ball valve **22**, thereby interrupting the water flowing from the water supplying pipe **21** into the diverter valve means **30**.

Since the high pressure water flushes through the valve rod **32** as the water from the water supplying pipe **21** refills the tank **50**, fouling formation on the upper end **321** and in the passage **3210** can be avoided.

While the present invention has been described in connection with what is considered the most practical and preferred embodiment, it is understood that this invention is not limited to the disclosed embodiment but is intended to cover various arrangements included within the spirit and scope of the broadest interpretations and equivalent arrangements.

I claim:

1. A toilet flushing device to be installed in a toilet bowl assembly having a water supply tank and a toilet bowl with a rim-flushing conduit and a neck portion, said toilet flushing device including a water supplying pipe adapted to extend into said water supply tank and that has a lower end connected to an external pressurized water source; float-controlled valve means provided on an upper end of said water supplying pipe to control water to flow from said water supplying pipe to said water supply tank; manually operated flush valve means for discharging water inside said

water supply tank to said neck portion of said toilet bowl; and diverter valve means for communicating fluidly said water supplying pipe and said water supply tank, said diverter valve means including a hollow valve housing, a transverse inlet pipe which receives water from said water supplying pipe, and a transverse supply line adapted to be connected to and supply water to said rim flushing conduit of said toilet bowl; the improvement comprising:

said valve housing having top and bottom walls, a transverse partition wall between said top and bottom walls, and upper and lower chambers divided by said partition wall, said partition wall having an opening and a first valve seat that confines said opening, said inlet pipe and said supply line being communicated respectively with said upper and lower chambers, said valve housing further having communication means for interconnecting said upper chamber and said water supply tank;

said diverter valve means further having a valve rod with upper and lower ends, said upper end of said valve rod extending into said upper chamber and being provided with a valve member, said lower end extending out of said valve housing, said valve rod passing through said opening of said partition wall without sealing said opening and sealingly extending through said bottom wall, said valve rod being normally biased upward so as to move said valve member away from said first valve seat, thereby permitting water from said inlet pipe to flow from said upper chamber to said lower chamber by passing through said opening around said valve rod and then to said supply line;

said diverter valve means further having a float member which is connected movably to said valve rod and which is movable downward, in response to a decrease in the water level inside said water supply tank when said flush valve means is operated, to pull down said valve rod, thereby moving said valve member downward to said first valve seat and interrupting communication between said upper and lower chambers and permitting water from said inlet pipe to flow through said communicating means to refill said water supply tank.

2. The toilet flushing device as claimed in claim **1**, wherein said communicating means includes a passage extending longitudinally through said valve rod.

3. The toilet flushing device as claimed in claim **2**, wherein said valve rod has a threaded portion provided adjacent to said lower end thereof, and a nut engaging said threaded portion of said valve rod to form an adjustable initial vertical distance between said float member and said nut.

4. The toilet flushing device as claimed in claim **3**, wherein said float member has a float body sleeved on said water supplying pipe, and a transverse plate which extends from said float body, said valve rod extending slidably through said transverse plate.

5. The toilet flushing device as claimed in claim **4**, wherein said top wall of said valve housing has a second valve seat formed therein, said valve rod having a spring member sleeved therearound between said valve member and said bottom wall, said spring member biasing normally said valve rod upward so as to seat said valve member against said second valve seat.

* * * * *