TRANSPERFECT

LINGUIST CERTIFICATION

I, Lau Tsin Ning, a TransPerfect certified linguist, hereby certify that I am competent to translate from Chinese to English, and that the attached translation is, to the best of my knowledge and belief, a true and accurate translation of the document entitled "CN2447417Y" from Chinese to English.

I declare that all statements made herein of my knowledge are true, and that all statements made on information and belief are believed to be true, and further that these statements were made with the knowledge that willful false statements and the like so made are punishable by fine or imprisonment or both, under Section 1001 of Title 18 of the United States Code and that such willful false statements may jeopardize the results of these proceedings.

I hereby certify under penalty of perjury under the laws of the United States of America that the foregoing is true and correct.

Lau Tsin Ning
Date: March 6, 2024

[19]State Intellectual Property Office of the People's Republic of China [51]Int. Cl[7]
E03D 1/32

[12]Utility Model Patent Specification

[21] ZL Patent No. 00253637.4

[45]**Publication Date** September 12, 2001 [11]**Publication No.** CN2447417Y

[22]**Application date** 2000.10.10 [21]**Application No.** 00253637.4

[73]**Patentee** Wang Guoxin
Address Tainan County, Taiwan Province
[72]**Designer(s)** Wang Guoxin
[74]**Patent agency** Beijing Sanyou Intellectual Property Agency Ltd.
Agent Cao Guangsheng

Specification Attached Drawings 3
Claims 1 Page 3 Pages Pages

[54]**Name of Utility Model** Toilet Water Tank Water Supply Switching Device

[57]**Abstract**

The present utility model relates to a toilet water tank water supply switching device. It comprises a water inlet. The water inlet is fitted with a secondary ball float with a hollow slot beneath. The switch mechanism is provided on one side of the water inlet, which is equipped with a valve seat. This valve seat has a slot to house the switch valve, and the valve seat is equipped with a water inlet and water outlet. The water outlet connects to the water supply pipeline and is equipped with an annular surround combined with the valve cover. The switching valve itself is equipped with upper and lower annular surrounds, as well as a small annular surround between them. Additionally, the valve stem is equipped with an external thread and is fastened with a T-shaped nut. This achieves more accurate control of the switching valve for the water supply, and the structure is also simple.

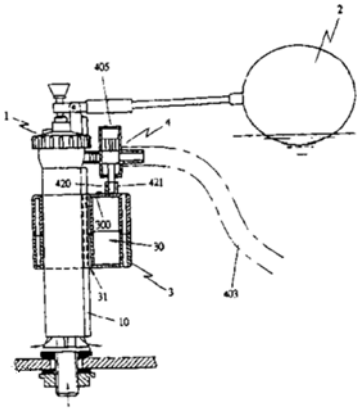

ISSN1008-4274

Published by Intellectual Property Publishing House

Claims

1. A toilet water tank water supply switching device, including a water inlet, with the following characteristics: the water inlet is fitted with a secondary ball float with a hollow slot beneath. The switch mechanism is provided on one side of the water inlet, which is equipped with a valve seat. This valve seat has a slot to house the switch valve, and the valve seat is equipped with a water inlet and water outlet. The water outlet connects to the water supply pipeline and is equipped with an annular surround combined with the valve cover. The switching valve itself is equipped with upper and lower annular surrounds, as well as a small annular surround between them. Additionally, the valve stem is equipped with an external thread and is fastened with a T-shaped nut.

Danco, Inc. - EX2007, Page 003
Fluidmaster, Inc. v. Danco, Inc. - IPR2024-00633

Specification

Toilet Water Tank Water Supply Switching Device

The present utility model relates to a toilet water tank water supply switching device.

In accordance with the current design of toilet water tank water supply switching, it is specifically targeted at the tanks of commercially available one-piece toilets that have insufficient water storage capacity in the tank, which results in insufficient water volume to thoroughly flush the toilet of waste. Therefore, each time the toilet is flushed, a portion of the water from the inlet device is directly supplied to the toilet bowl to compensate for the lack of water in the tank, thereby ensuring the toilet is flushed clean in a single flush.

In response to the aforementioned functions and objectives, there are known creations such as those disclosed in Publication No. 235041, 319264, 339104, etc.

Publication No. 235041 sets the secondary ball float of its water supply switching device above the guide bar, which causes a delayed action in the water supply switch. The water level in the tank must reach the very top before any action occurs. Publication No. 319264 utilizes a secondary ball float to drive the water inlet control valve, achieving the purpose of water supply switching. However, since its ball float is directly set at the end of the actuator rod, a drawback is that the secondary ball float is not supported by any object, leading to problems of tilted, downward, or upward floating, resulting in the valve plug not opening or closing smoothly.

Publication No. 301324 features a switching blade, which is driven by a secondary ball float. This design uses the ascending and descending motion of the secondary ball float to pull the ball chain, resulting in the function of action switching.

Publication No. 339104 uses a secondary ball float to drive the switching device. Therefore, the second control valve of the switching device is also equipped with a spring to create a response action. However, this structure is overly complex and not cost-effective.

All of the aforementioned cases combine the switching valve with a secondary ball float. A disadvantage of this design is that even a slight deviation in the ascending and descending of the secondary ball float can result in inaccurate switching actions of the switching valve, and it may even cause the valve to jam, causing the problem of poor water supply switching.

For this, the Applicant, with many years of experience in the design and manufacture of related equipment, has conducted research specifically targeting the problems and drawbacks of the aforementioned known creations.

The objective of this present utility model is to provide a toilet water tank water supply switching device, which employs a secondary ball float mounted on the inlet device. The secondary ball float is driven by the water in the tank to ascend and descend, and it actuates the switching valve in a push-top mode for water supply switching. This design is simple in structure and extremely convenient to operate and adjust.

The objective of this present utility model is achieved as follows: A toilet water tank water supply switching device, including a water inlet, with the following characteristics: the water inlet is fitted with a secondary ball float with a hollow slot beneath. The switch mechanism is provided on one side of the water inlet, which is equipped with a valve seat. This valve seat has a slot to house the switch valve, and the valve seat is equipped with a water inlet and water outlet. The water outlet connects to the water supply pipeline and is equipped with an annular surround combined with the valve cover. The switching valve itself is equipped with upper and lower annular surrounds, as well as a small annular surround between them. Additionally, the valve stem is equipped with an external thread and is fastened with a T-shaped nut.

Danco, Inc. - EX2007, Page 004
Fluidmaster, Inc. v. Danco, Inc. - IPR2024-00633

By adopting the said solution: This achieves more accurate control of the switching valve for the water supply, and the structure is also simple.

Thus, to enable the esteemed reviewing members to fully understand the present utility model, it is explained as follows with reference to the accompanying drawings:

Figure 1 A top view of the present utility model.

Figure 2 A view of the present utility model when the water level is full.

Figure 3 A view of the present utility model after flushing.

Figure 4 A partially enlarged view of Figure 3.

Figure 5 A partially exploded view of the present utility model.

As shown in Figures 1 and 2, the structure of the toilet water tank water supply switching device of this present utility model includes a water inlet device 1. This water inlet device is equipped with a guide rail 10 and a ball float 2, to control whether or not the water inlet device admits water. The water inlet device 1 is equipped with a secondary ball float. This secondary ball float 3 has a hollow slot 30 and multiple guide slots 31, which allow it to freely change its combination position in conjunction with the aforementioned guide rail, and enable the secondary ball float 3 to ascend and descend along a certain trajectory.

On one side of the inlet device, there is a switching mechanism 4. The switching mechanism 4 is equipped with a valve seat 40. This valve seat 40 has a slot 400 to accommodate a switching valve 41. The valve seat 40 has water inlet and outlet 401 and 402, where the water outlet 402 can be connected to the water supply pipeline 403, and the water supply line 403 is directed to the toilet to directly provide water supply to the toilet. An annular surround 404 is designed to combine with the valve cover 405, thereby securing the switching valve 41 in the slot of the valve seat, restricting its upward and downward movement distances.

The switching valve 41 is equipped with upper and lower annular surrounds 411 and 412, and between these two annular surrounds 411 and 412, there is a smaller annular surround 415, which the smaller annular surround 415 can be cross-shaped or another shape. This facilitates a state as shown in Figures 3 and 4, where the water inlet and outlet can be aligned in a straight line, allowing water to flow into the toilet. However, when the water in the toilet water tank gradually reaches a set level of height (as shown in Figure 2), the lower annular surround 412 will block between the water inlet and outlet 401 and 402, thus discontinuing the water supply to the toilet through this switching mechanism. Furthermore, the valve stem 42 is equipped with external threads 420, which are combined with a T-shaped nut 421. This T-shaped nut has an appropriate weight, such that when the water level in the water tank decreases, the weight of the nut will automatically lower the switching valve. By simply turning the T-shaped nut, the length of the valve stem can be altered, thus changing the position at which the switching valve's stem is driven by the secondary ball float. This achieves a practical design for water supply switching. Additionally, the switching valve and the secondary ball float are set in a separate state, allowing the ascension and descension of the switching valve to be driven by the pushing action of the top surface 300 of the secondary ball float. It also prevents any adverse effects on the switching valve caused by the deviation of the secondary ball float, thereby achieving a truly smooth transition of the switching mechanism.

Danco, Inc. - EX2007, Page 005
Fluidmaster, Inc. v. Danco, Inc. - IPR2024-00633

The characteristics of the present utility model are:

1. Utilizing a secondary ball float positioned in the inlet device to control the switching mechanism, which possesses the advantage of smooth ascension and descension.

2. Additionally, a separation mode is adopted between the valve stem and the secondary ball float, ensuring that the ascension and descension of the valve stem are not affected by the trajectory of the secondary ball float's movement, enabling rapid and precise operation.

3. The switching valve within the switching mechanism and the valve stem are integrally formed, making assembly and combination exceedingly convenient and fast.

Danco, Inc. - EX2007, Page 006
Fluidmaster, Inc. v. Danco, Inc. - IPR2024-00633

Drawings attached to the specification

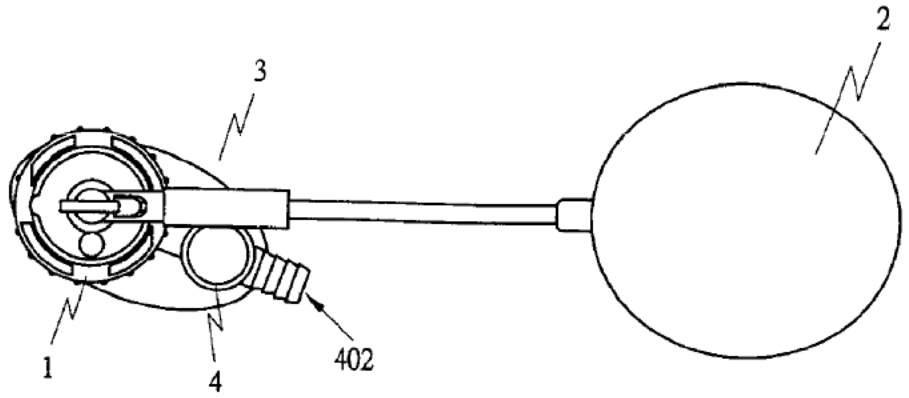

Figure 1

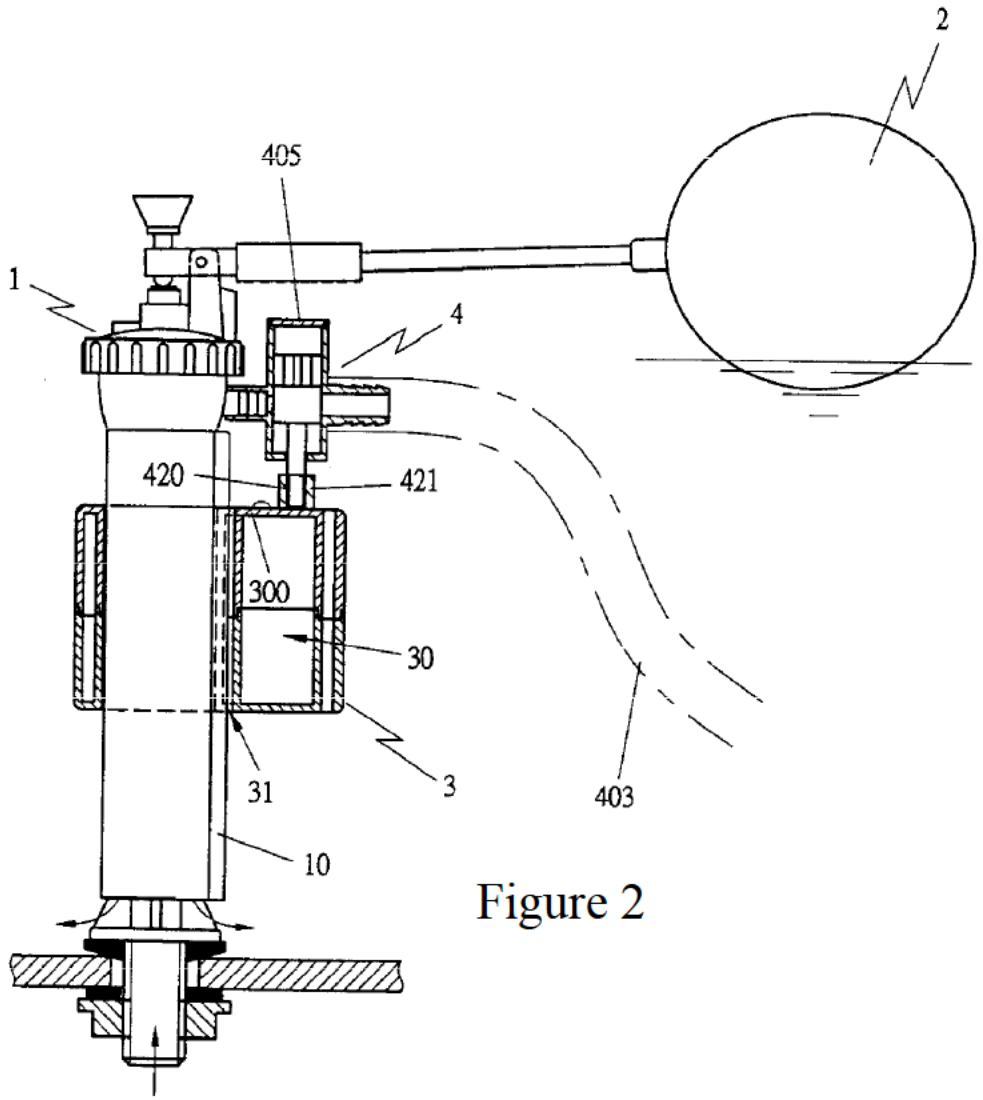

Figure 2

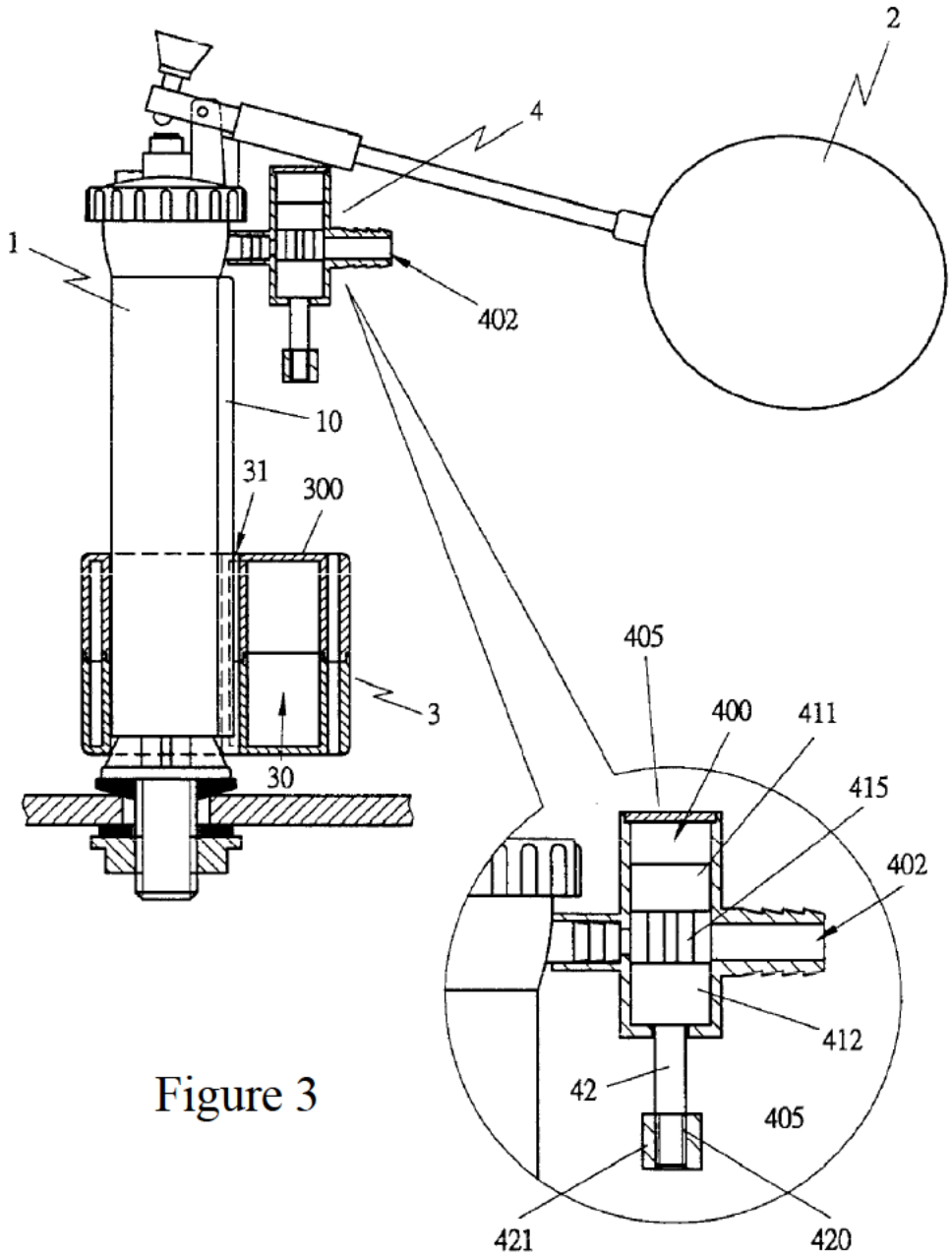

Figure 3

Figure 4

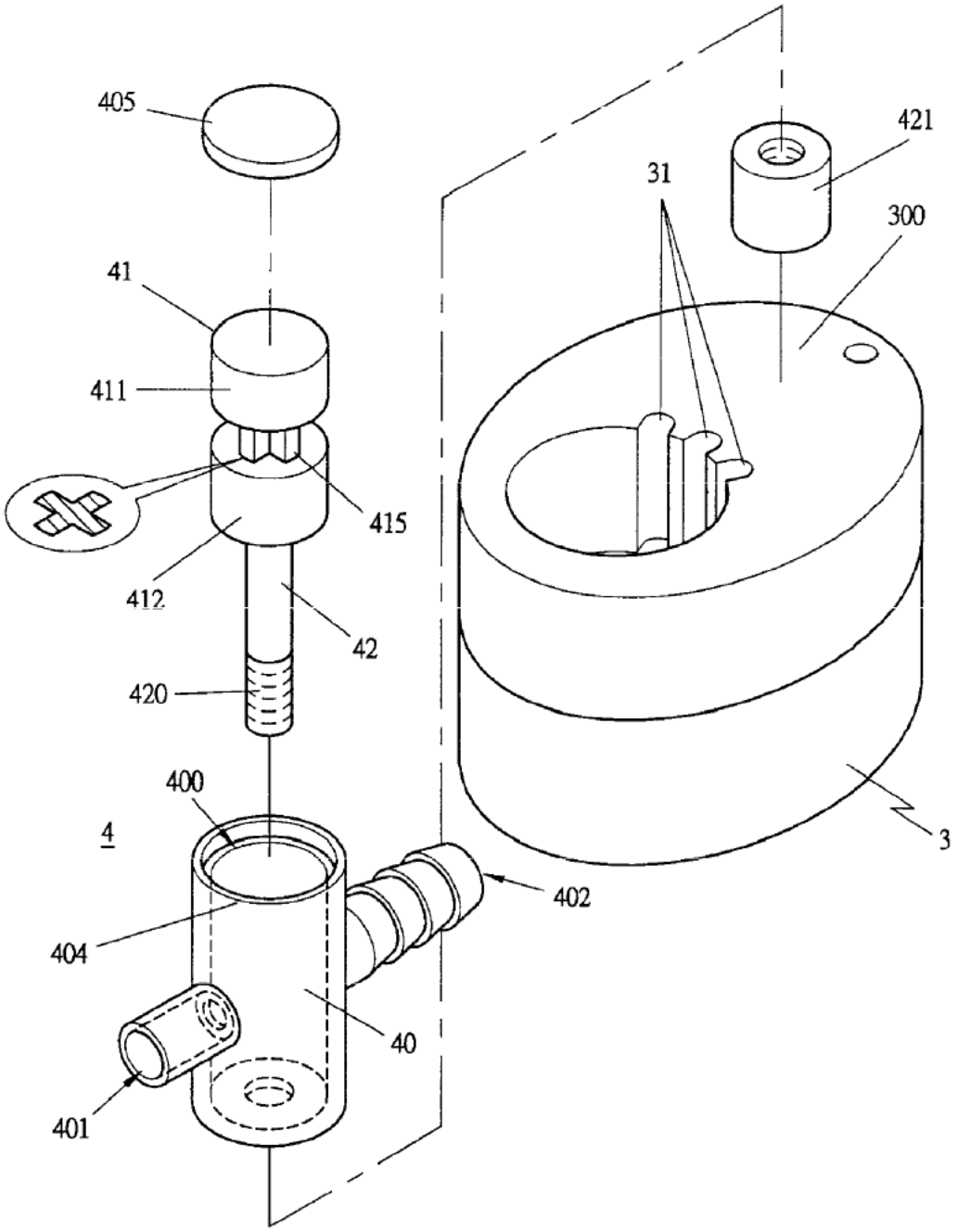

Figure 5