US 20240026990A1

(19) United States
(12) Patent Application Publication
Cao
(10) Pub. No.: US 2024/0026990 A1
(43) Pub. Date: Jan. 25, 2024

(54) **CRYOGENIC CYLINDER CONTROL SYSTEM, GLOBE VALVE, AND SOLENOID VALVE**

(71) Applicant: **Engineered Controls International, LLC**, Elon, NC (US)

(72) Inventor: **Guangbin Cao**, Shanghai (CN)

(21) Appl. No.: **18/479,673**

(22) Filed: **Oct. 2, 2023**

Related U.S. Application Data

(63) Continuation of application No. 18/169,648, filed on Feb. 15, 2023, which is a continuation of application No. 16/624,239, filed on Dec. 18, 2019, now Pat. No. 11,592,120, filed as application No. PCT/CN2018/091084 on Jun. 13, 2018.

(30) **Foreign Application Priority Data**

Jun. 23, 2017 (WO) PCT/CN2017/089805

Publication Classification

(51) **Int. Cl.**

F16K 31/50	(2006.01)
F16K 27/02	(2006.01)
F16K 41/04	(2006.01)
F16K 1/04	(2006.01)

(52) **U.S. Cl.**

CPC ***F16K 31/50*** (2013.01); ***F16K 27/0254*** (2013.01); ***F16K 41/043*** (2013.01); ***F16K 1/04*** (2013.01); *F17C 2205/0332* (2013.01)

(57) **ABSTRACT**

Cryogenic valves are disclosed. A valve for includes a valve body, a valve seat, a gland nut coupled to the valve body, and a lower spindle threadably engaged to the valve body. The lower spindle defines a first bore. The valve includes a seat disc mounted to the lower spindle and configured to engage the valve seat in a closed configuration and be disengaged from the valve seat in an open configuration. The valve includes an upper spindle defining a spring bore. A portion of the upper spindle is received in the first bore to matingly engage the upper spindle to the lower spindle such that rotation of the upper spindle causes rotation of the lower spindle. The valve includes a spring that is at least partially disposed in the spring bore of the upper spindle and is configured to bias the upper spindle to sealingly engage the gland nut.

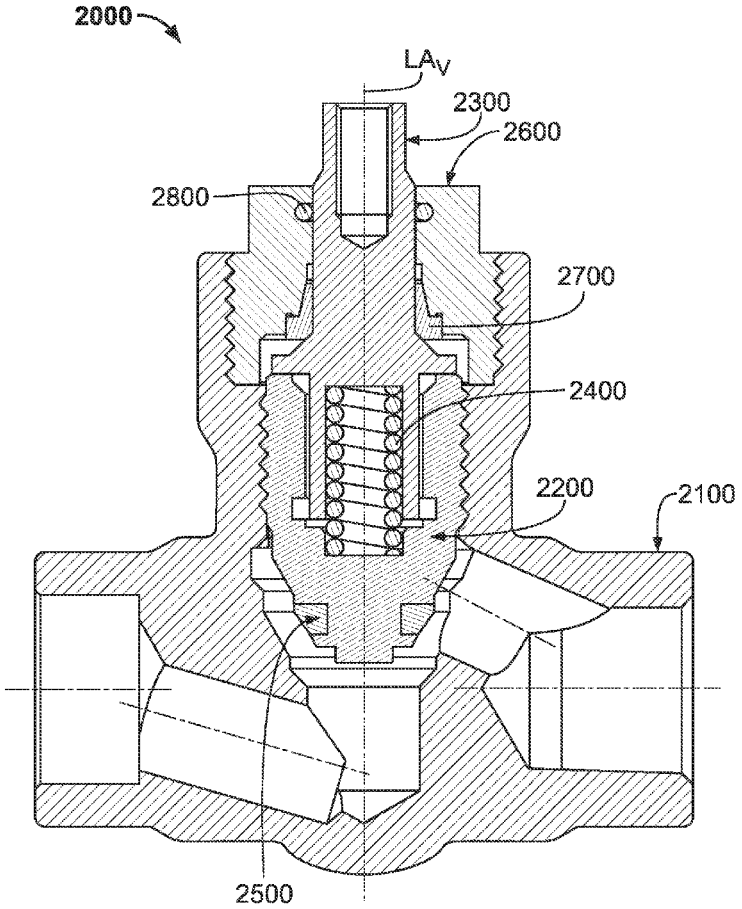

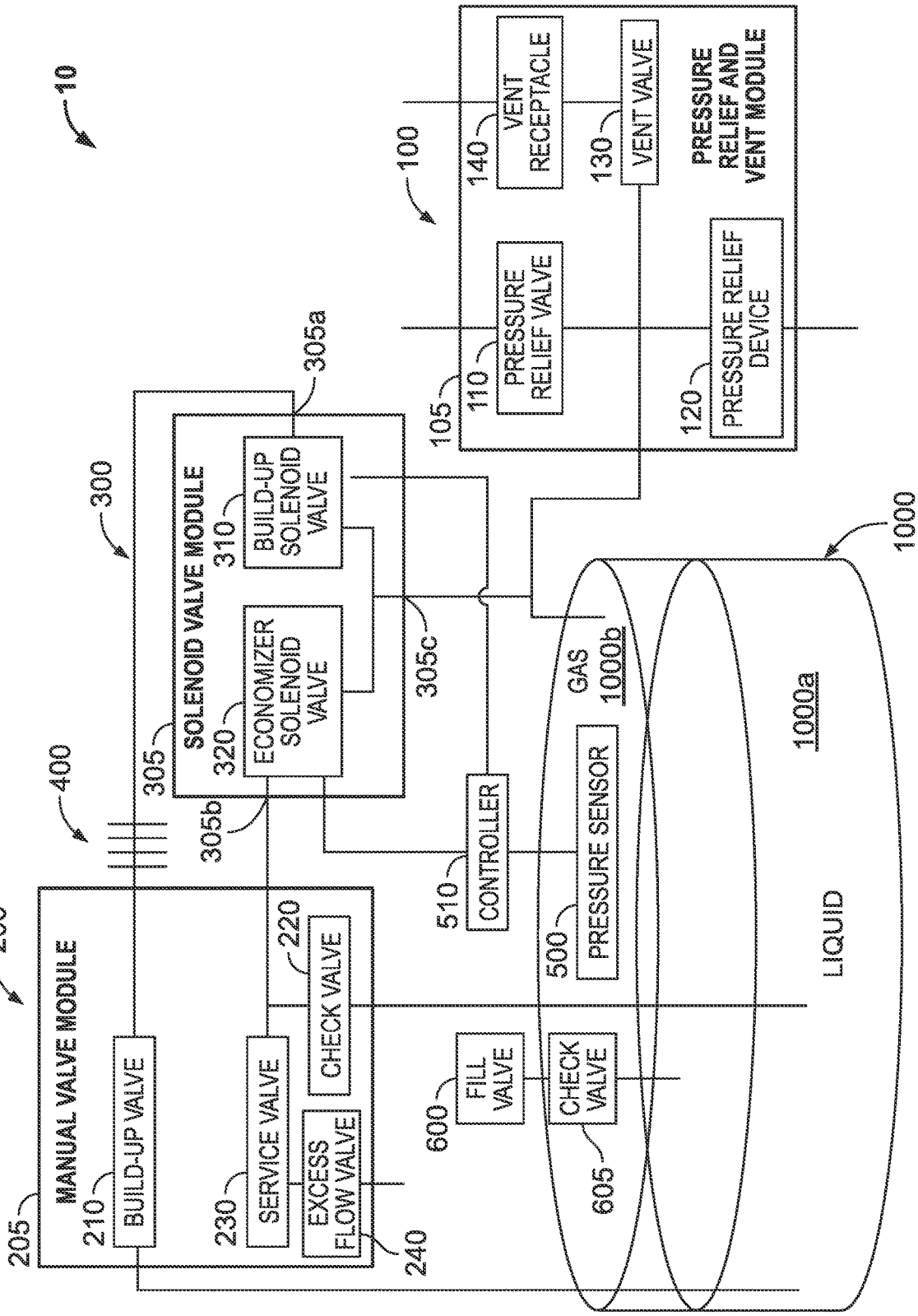
10
100
PRESSURE RELIEF AND VENT MODULE
VENT RECEPTACLE
140
VENT VALVE
130
PRESSURE RELIEF VALVE
110
PRESSURE RELIEF DEVICE
120
105
300
SOLENOID VALVE MODULE
305
305a
305b
305c
BUILD-UP SOLENOID VALVE
310
ECONOMIZER SOLENOID VALVE
320
400
200
MANUAL VALVE MODULE
205
BUILD-UP VALVE
210
SERVICE VALVE
230
CHECK VALVE
220
EXCESS FLOW VALVE
240
CONTROLLER
510
PRESSURE SENSOR
500
GAS
1000b
1000a
LIQUID
1000
FILL VALVE
600
CHECK VALVE
605

FIG. 1

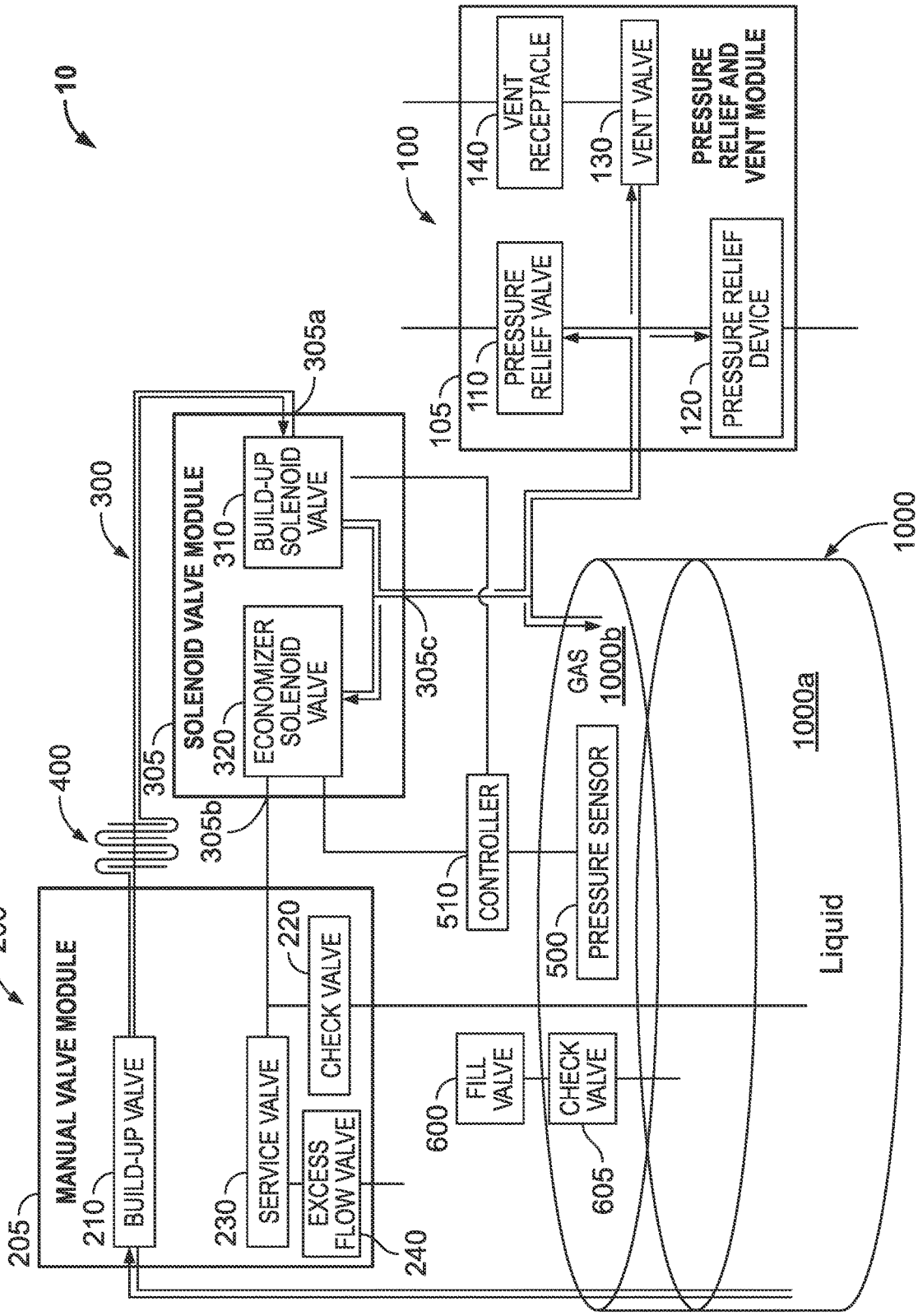
10
100
105
110
PRESSURE RELIEF VALVE
140
VENT RECEPTACLE
130
VENT VALVE
PRESSURE RELIEF AND VENT MODULE
120
PRESSURE RELIEF DEVICE
300
305
SOLENOID VALVE MODULE
305a
310
BUILD-UP SOLENOID VALVE
320
ECONOMIZER SOLENOID VALVE
305b
305c
400
200
205
MANUAL VALVE MODULE
210
BUILD-UP VALVE
220
CHECK VALVE
230
SERVICE VALVE
240
EXCESS FLOW VALVE
510
CONTROLLER
500
PRESSURE SENSOR
GAS
1000b
1000
1000a
Liquid
600
FILL VALVE
605
CHECK VALVE

FIG. 2

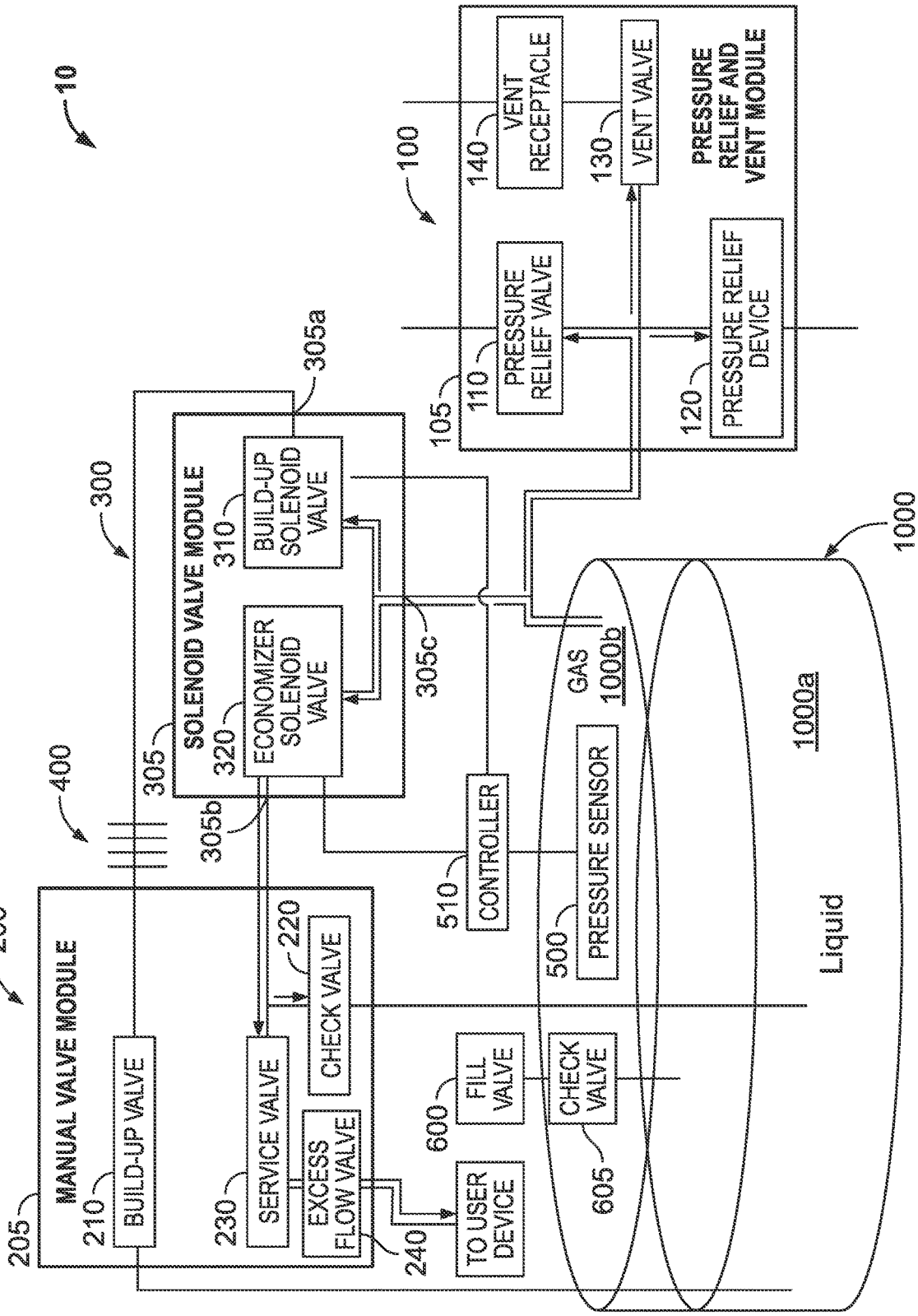
10
100
105
110
PRESSURE RELIEF VALVE
140
VENT RECEPTACLE
130
VENT VALVE
PRESSURE RELIEF AND VENT MODULE
120
PRESSURE RELIEF DEVICE
300
305
SOLENOID VALVE MODULE
305a
310
BUILD-UP SOLENOID VALVE
320
ECONOMIZER SOLENOID VALVE
305b
305c
400
200
205
MANUAL VALVE MODULE
210
BUILD-UP VALVE
220
CHECK VALVE
230
SERVICE VALVE
240
EXCESS FLOW VALVE
510
CONTROLLER
500
PRESSURE SENSOR
600
FILL VALVE
605
CHECK VALVE
TO USER DEVICE
GAS
1000b
1000a
Liquid
1000

FIG. 3

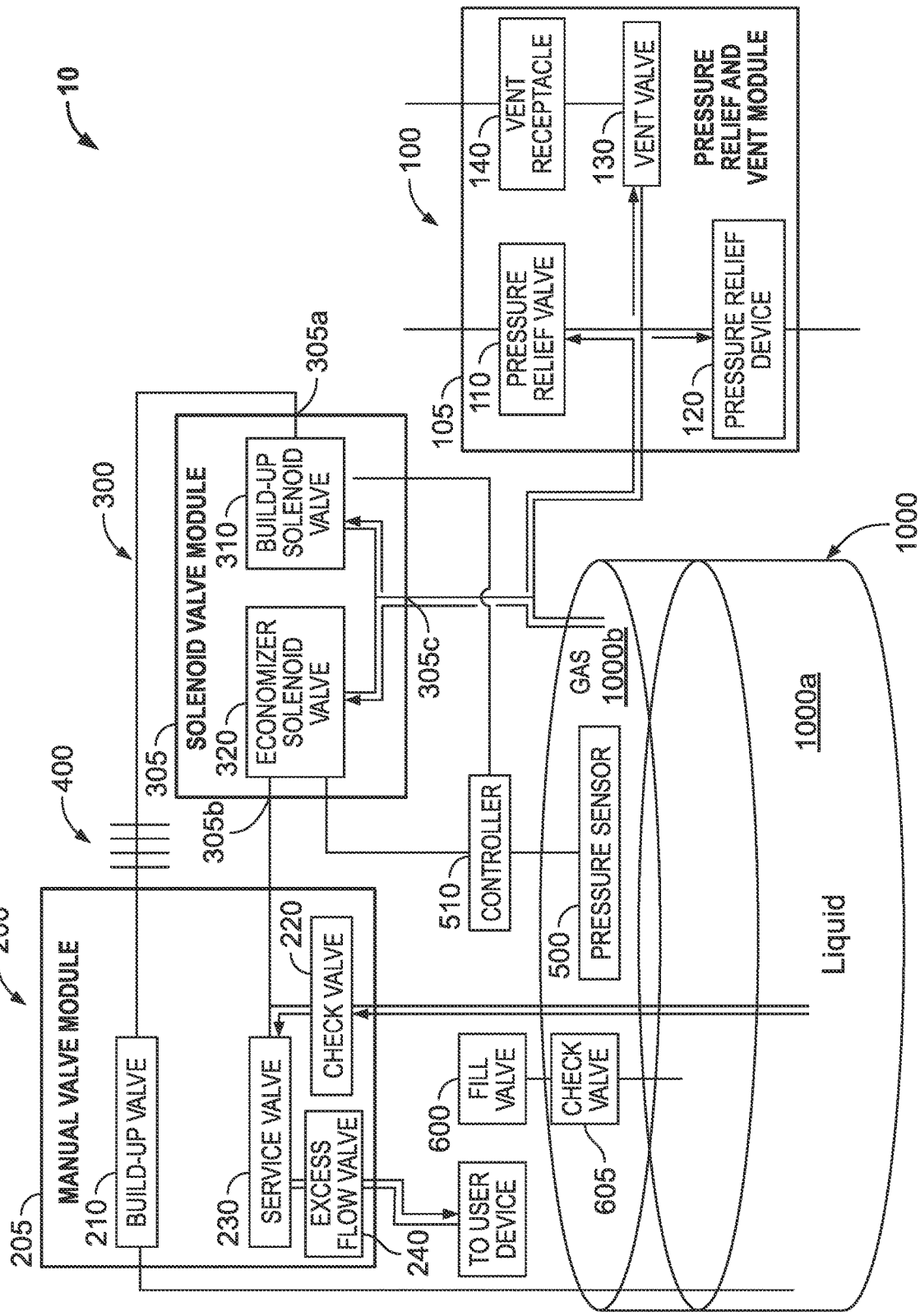
10
100
105
110
PRESSURE RELIEF VALVE
120
PRESSURE RELIEF DEVICE
130
VENT VALVE
140
VENT RECEPTACLE
PRESSURE RELIEF AND VENT MODULE
300
305
SOLENOID VALVE MODULE
305a
305b
305c
310
BUILD-UP SOLENOID VALVE
320
ECONOMIZER SOLENOID VALVE
400
200
205
MANUAL VALVE MODULE
210
BUILD-UP VALVE
220
CHECK VALVE
230
SERVICE VALVE
240
EXCESS FLOW VALVE
510
CONTROLLER
500
PRESSURE SENSOR
600
FILL VALVE
605
CHECK VALVE
TO USER DEVICE
GAS
1000b
1000a
Liquid
1000

FIG. 4

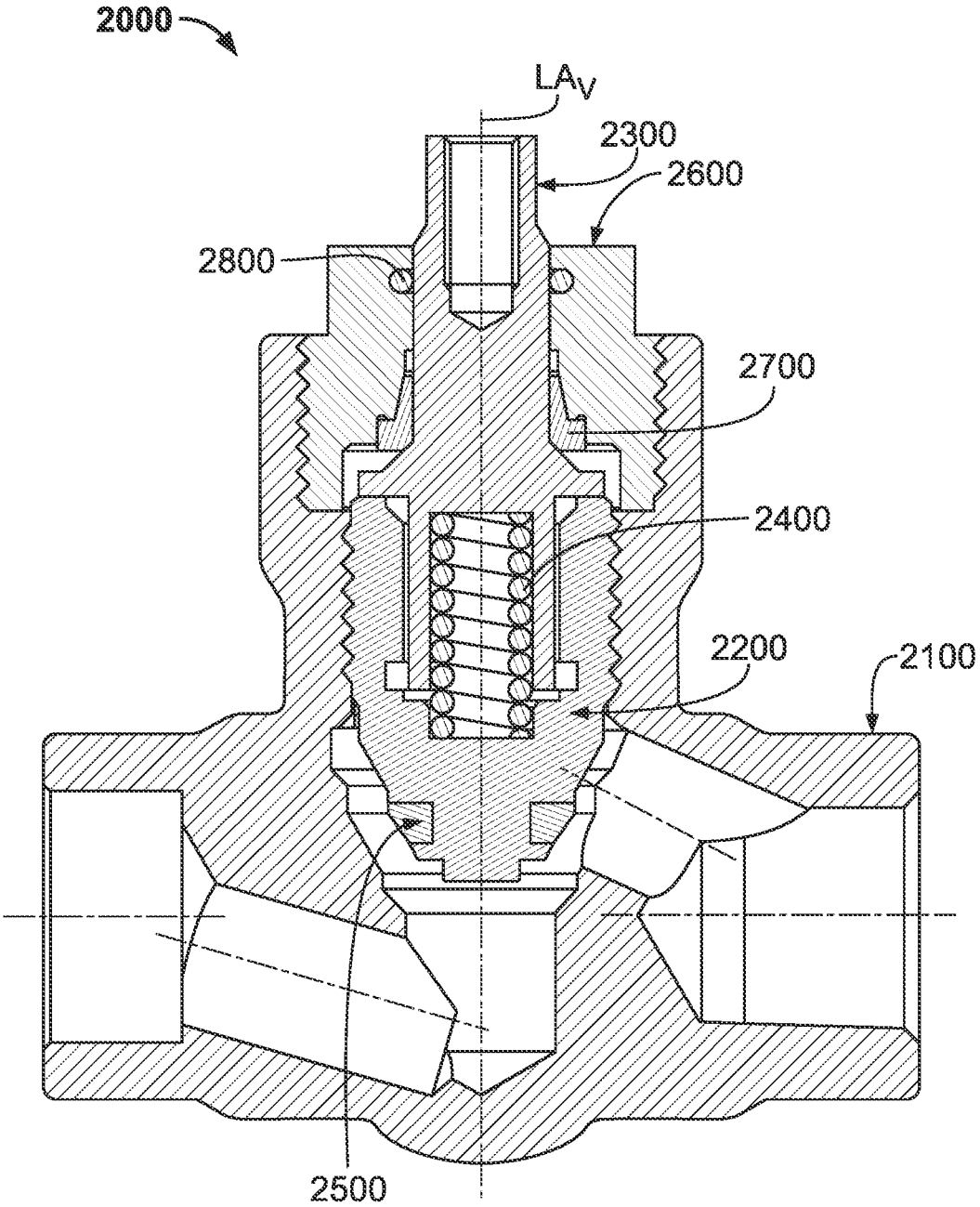

FIG. 5

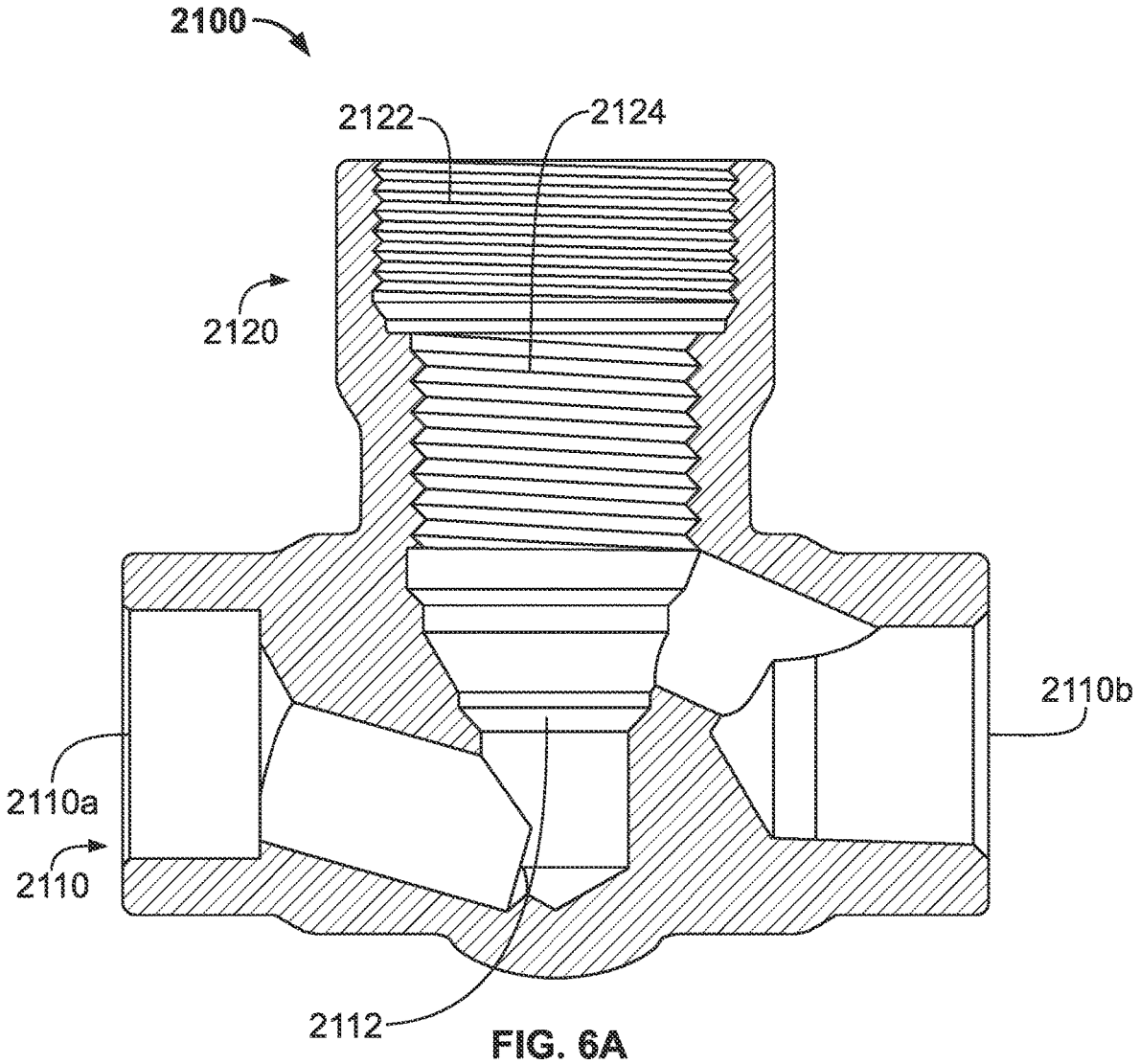

FIG. 6A

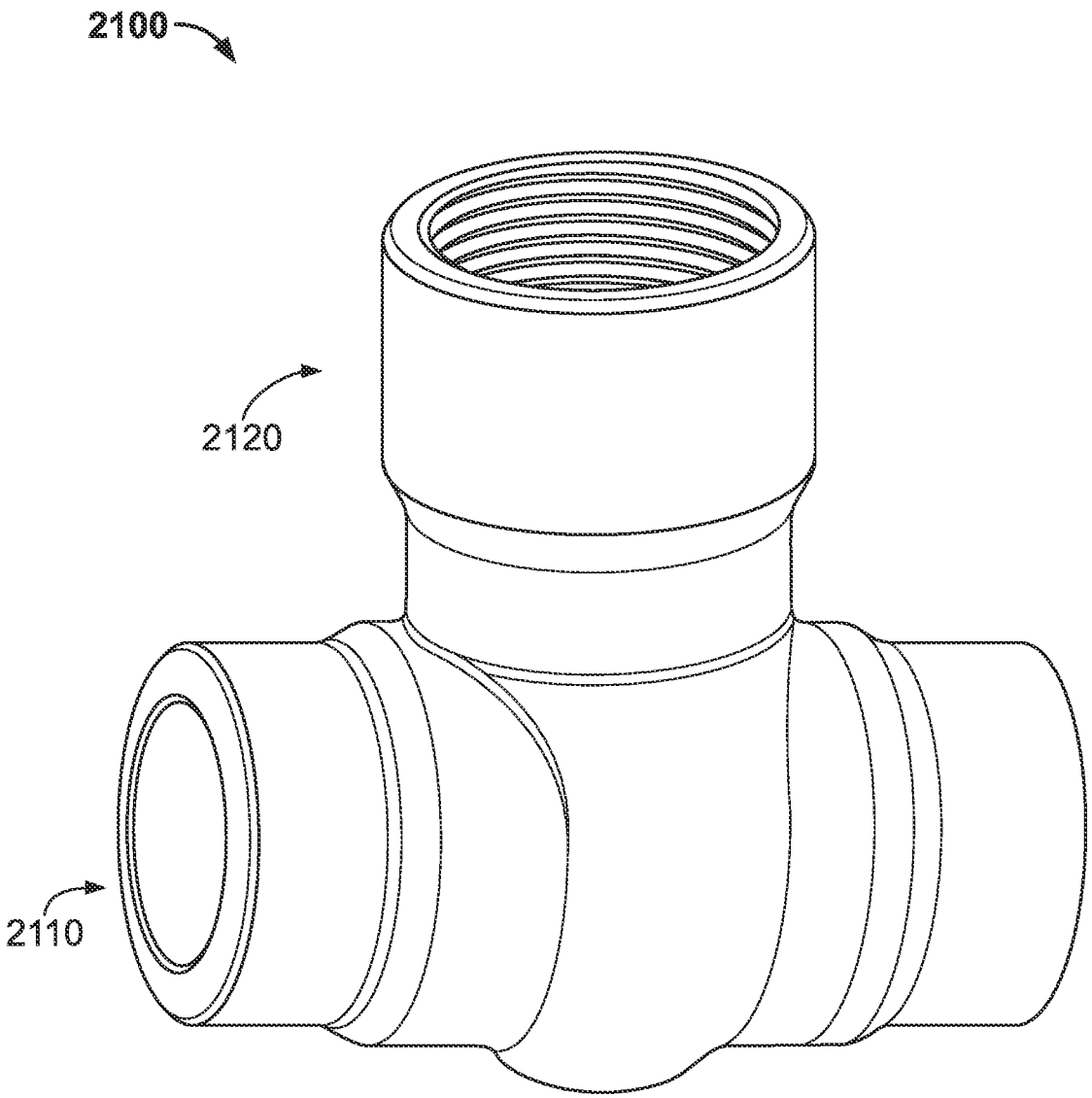

FIG. 6B

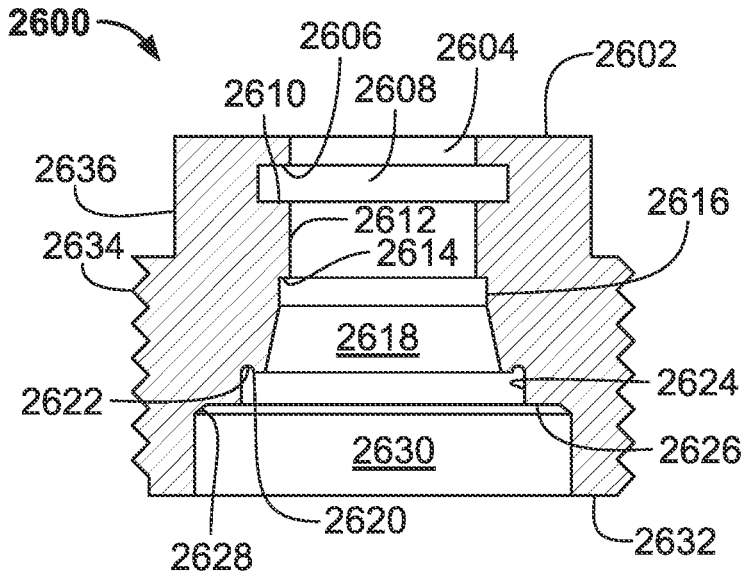
2600
2606
2604
2602
2610
2608
2636
2616
2612
2634
2614
2618
2624
2622
2626
2630
2620
2632
2628

FIG. 7A

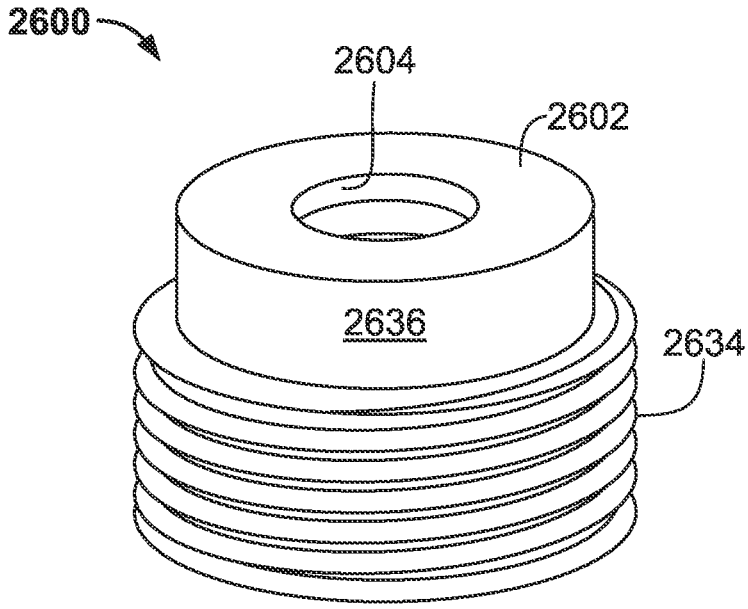
2600
2604
2602
2636
2634

FIG. 7B

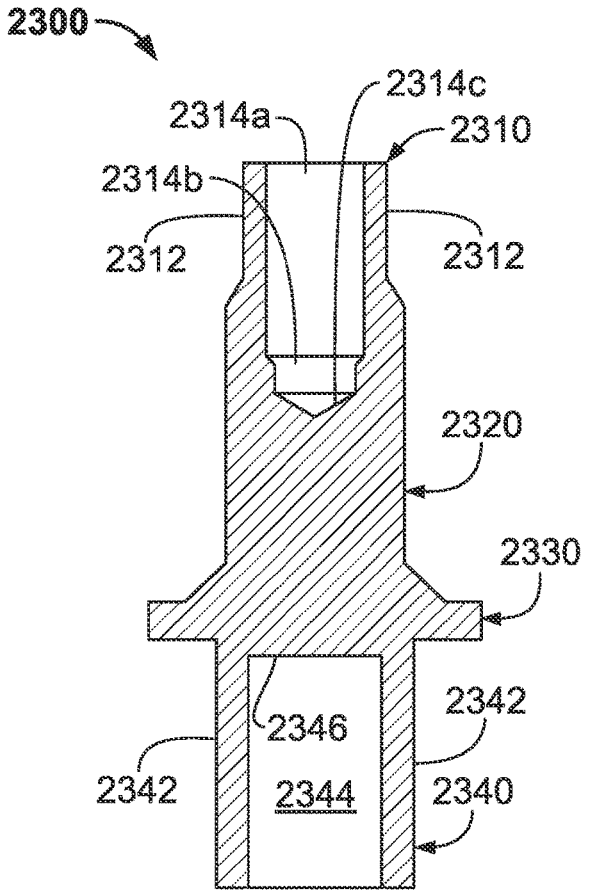
2300
2314c
2314a
2310
2314b
2312
2312
2320
2330
2346
2342
2342
2344
2340

FIG. 8A

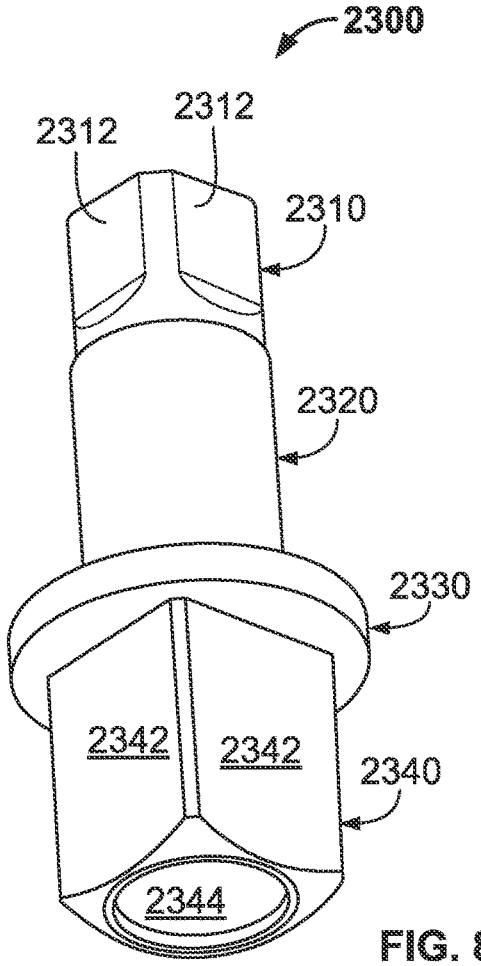
2300
2312
2312
2310
2320
2330
2342
2342
2340
2344

FIG. 8B

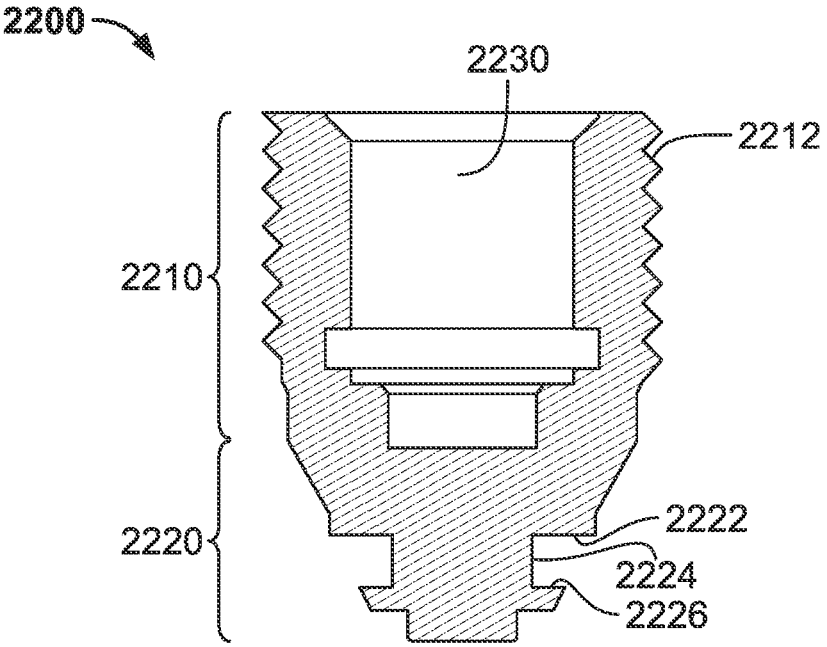

FIG. 9A

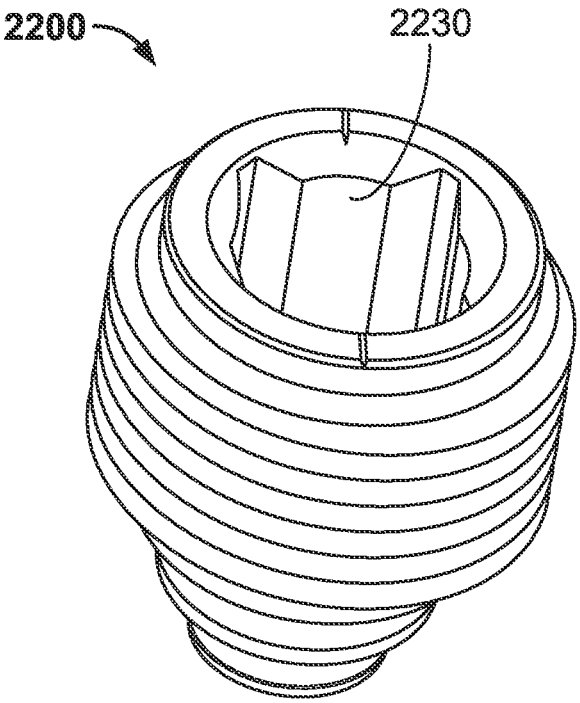

FIG. 9B

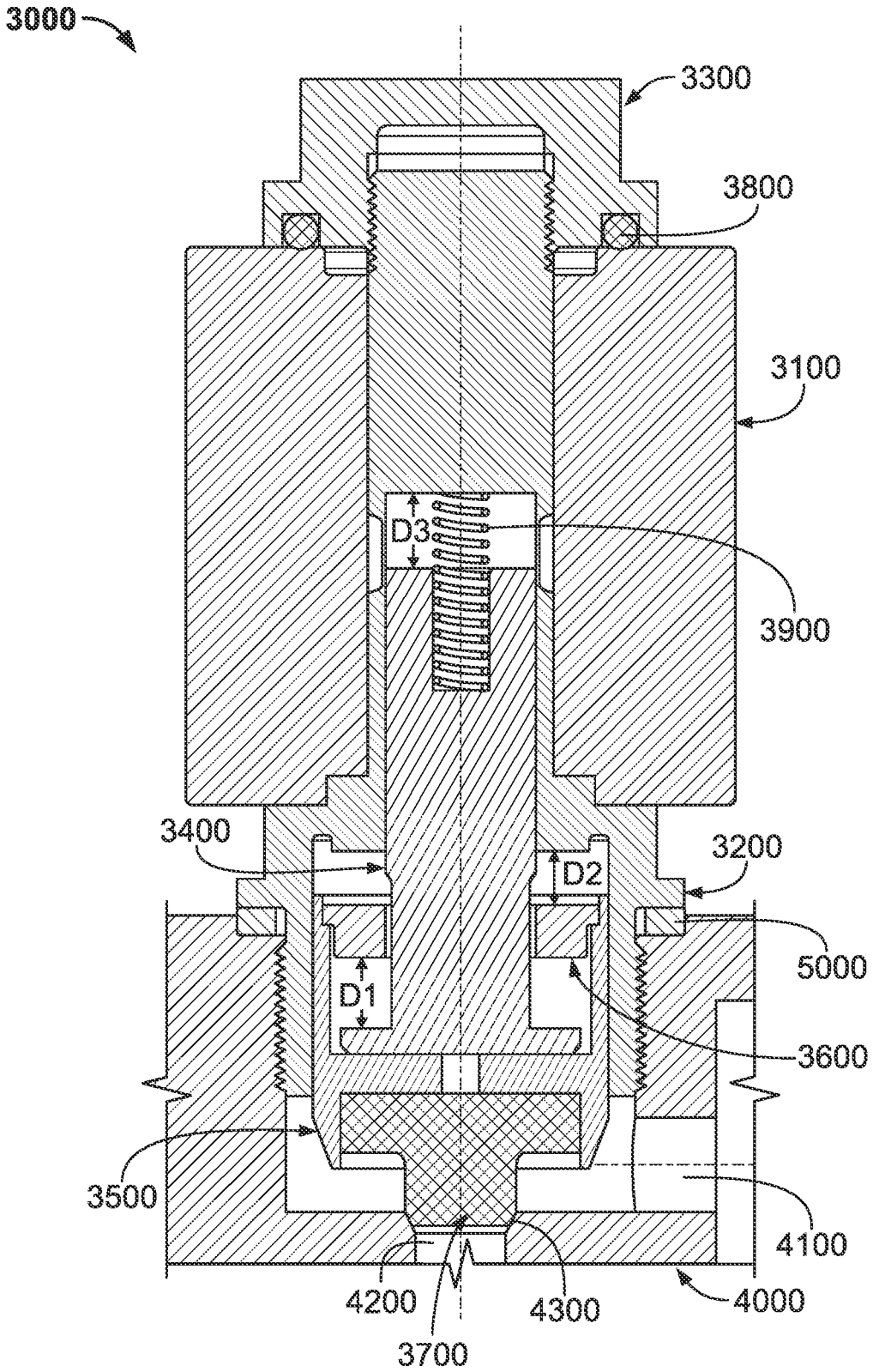
3000
3300
3800
3100
D3
3900
3400
3200
D2
5000
D1
3600
3500
4100
4200
4300
4000
3700

FIG. 10

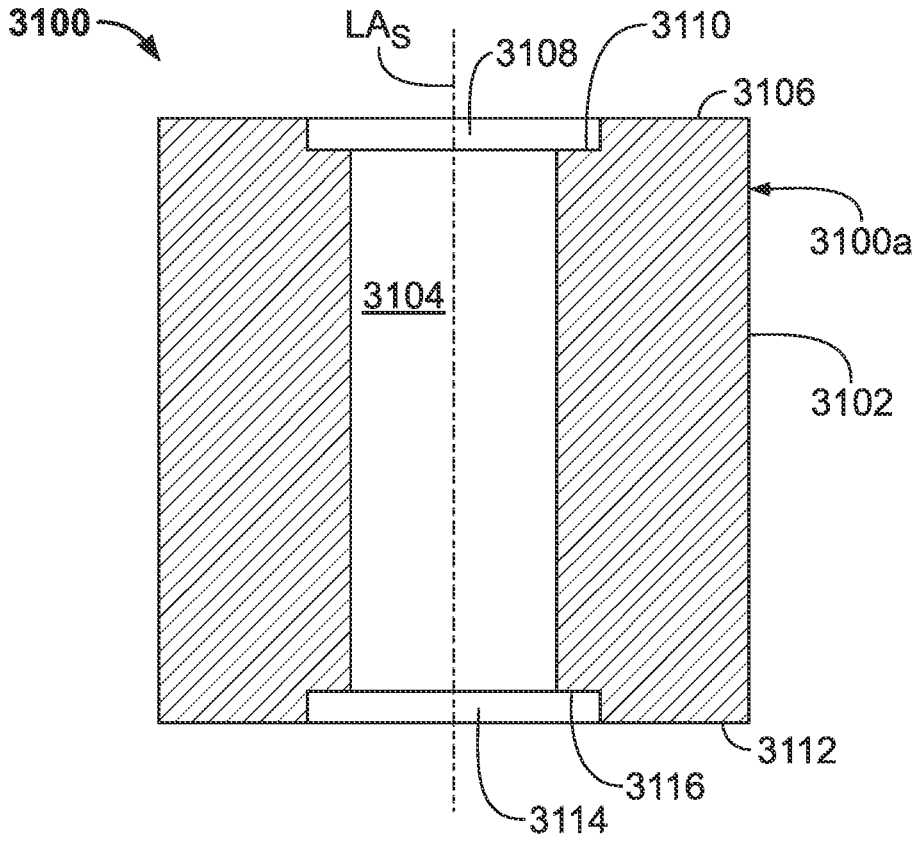

FIG. 11

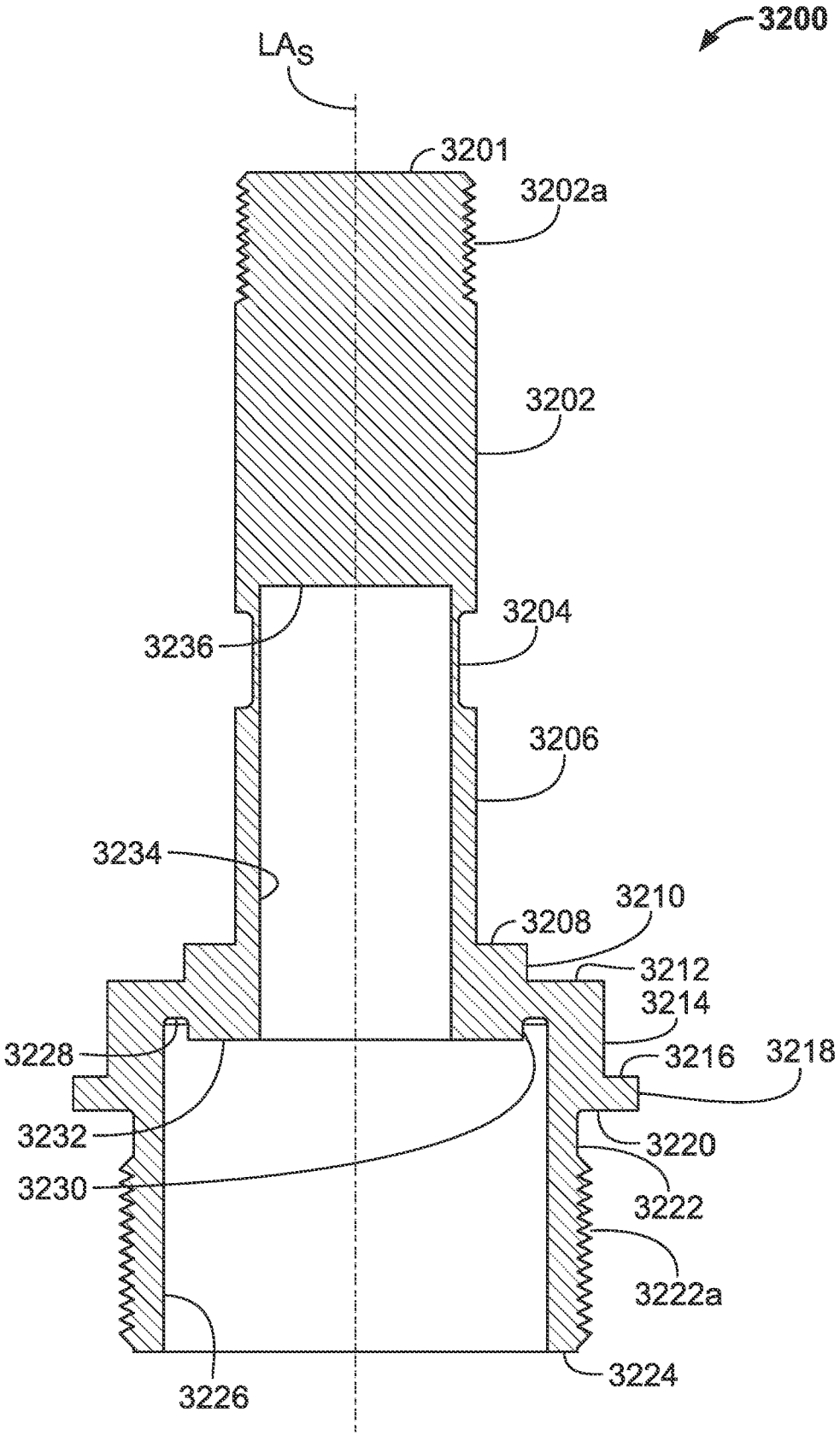
3200
LAS
3201
3202a
3202
3204
3236
3206
3234
3210
3208
3212
3214
3228
3216
3218
3232
3220
3230
3222
3222a
3226
3224

FIG. 12

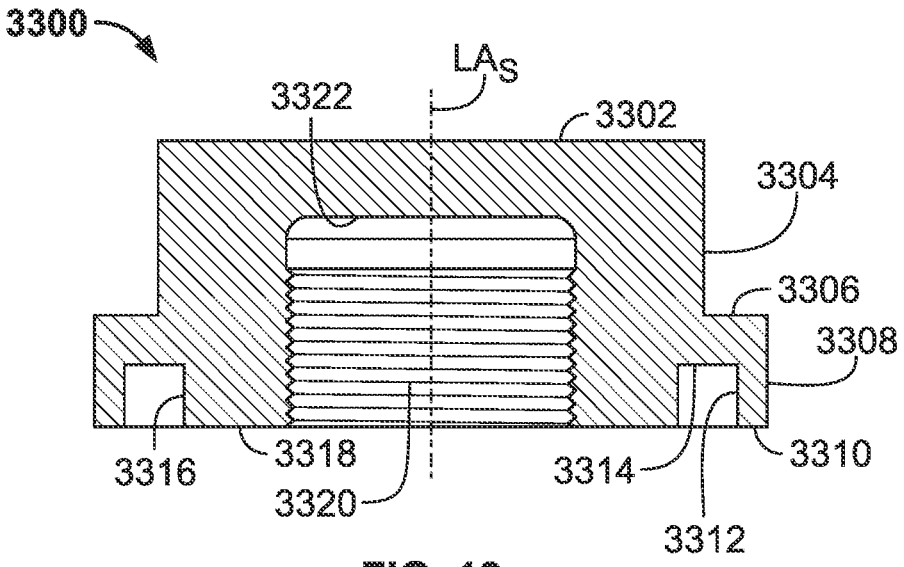
3300
LAS
3322
3302
3304
3306
3308
3316
3318
3320
3314
3310
3312

FIG. 13

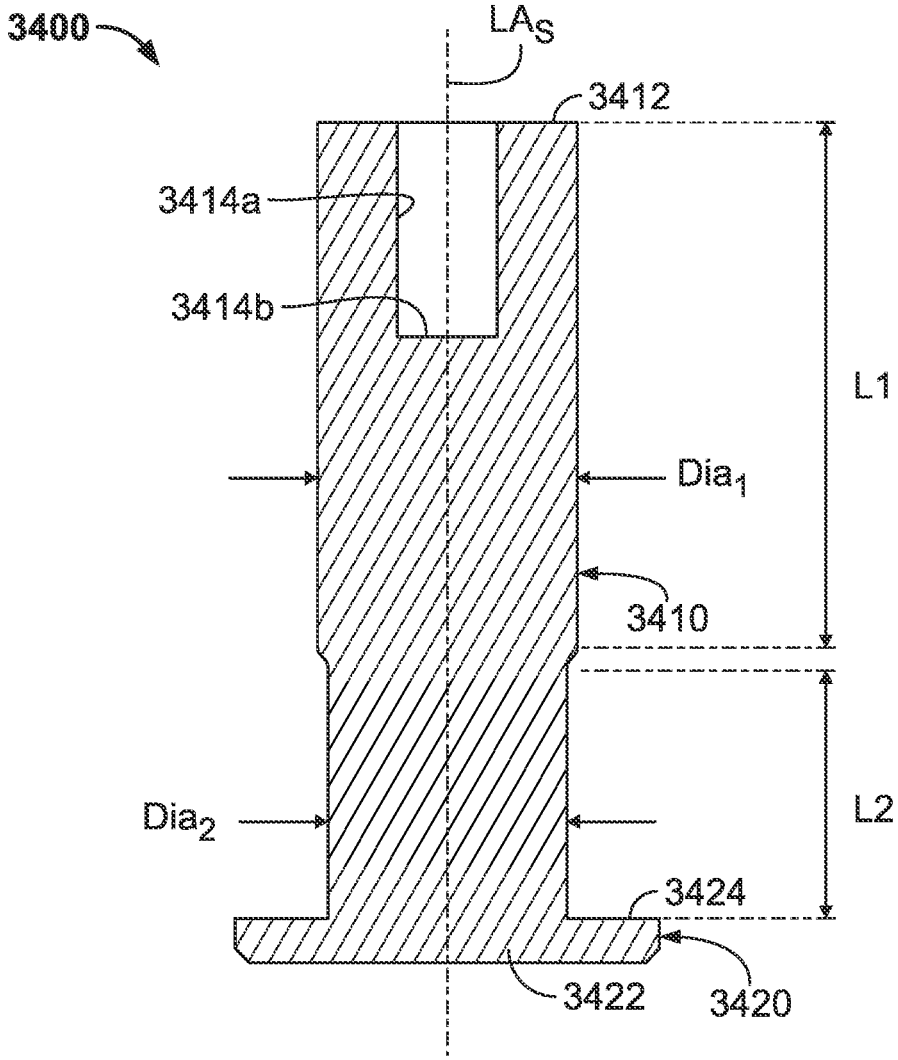
3400
LAS
3412
3414a
3414b
L1
Dia1
3410
L2
Dia2
3424
3422
3420

FIG. 14

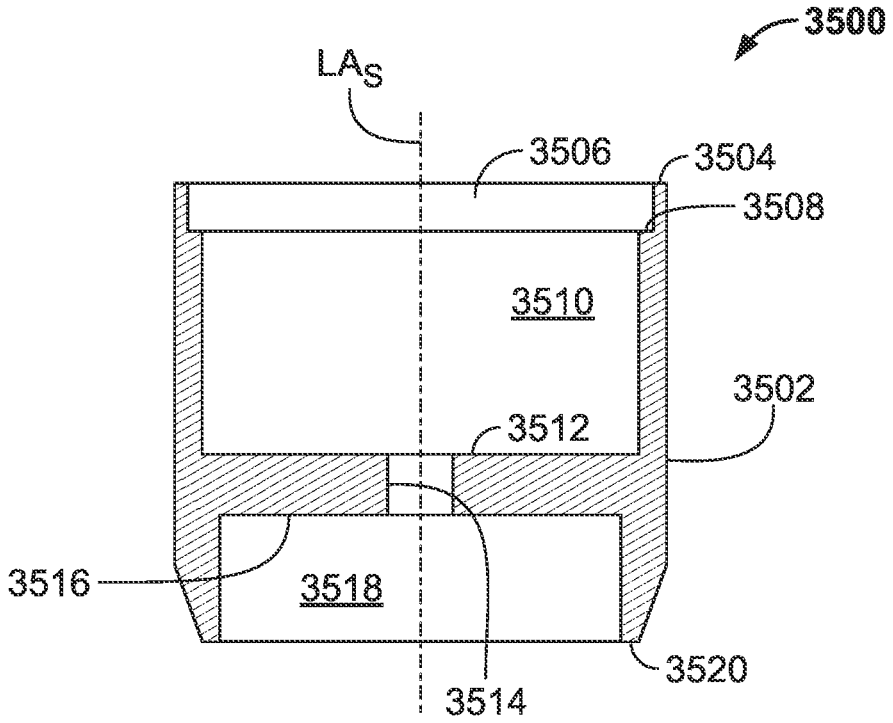

FIG. 15

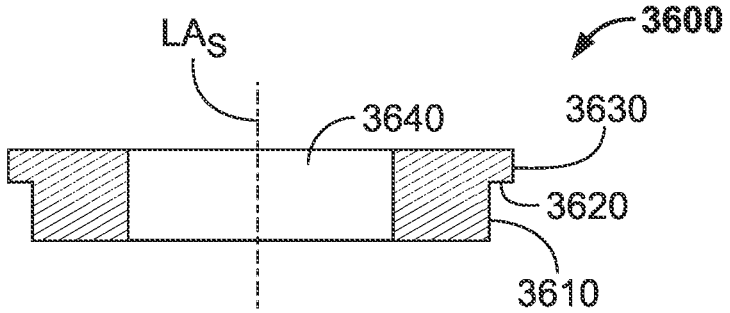

FIG. 16

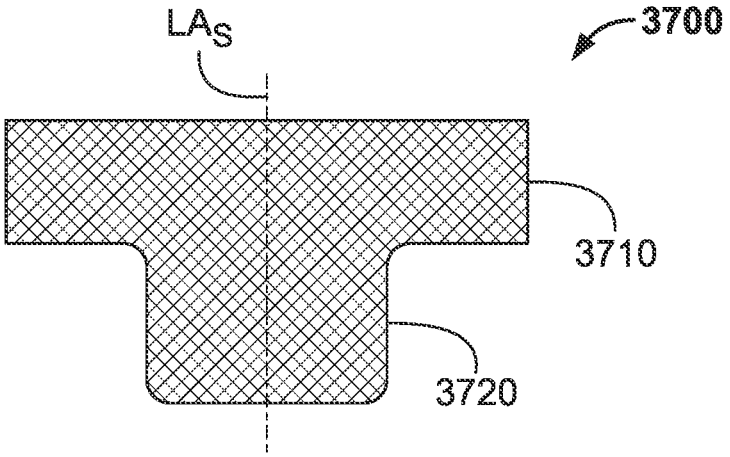

FIG. 17

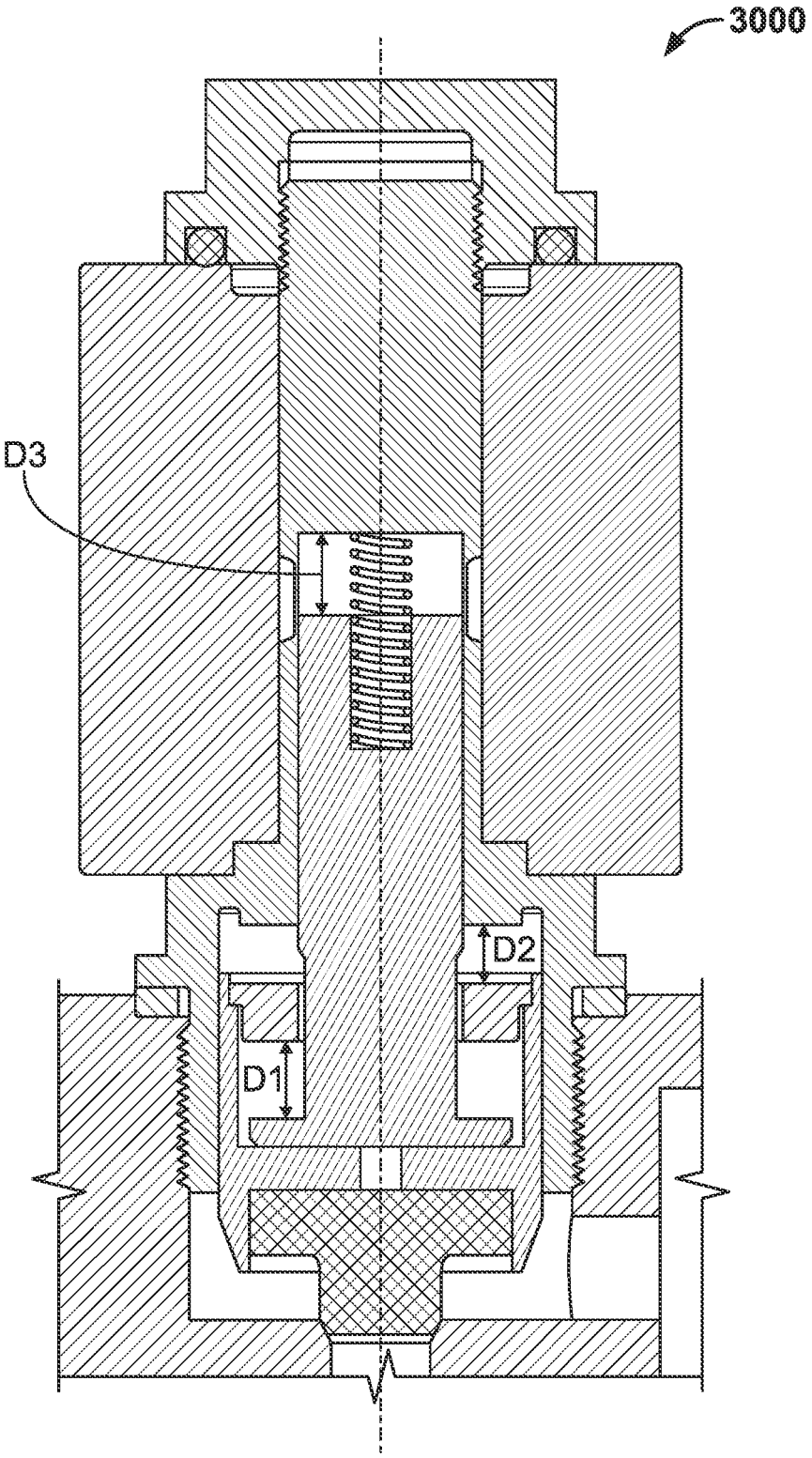

FIG. 18A

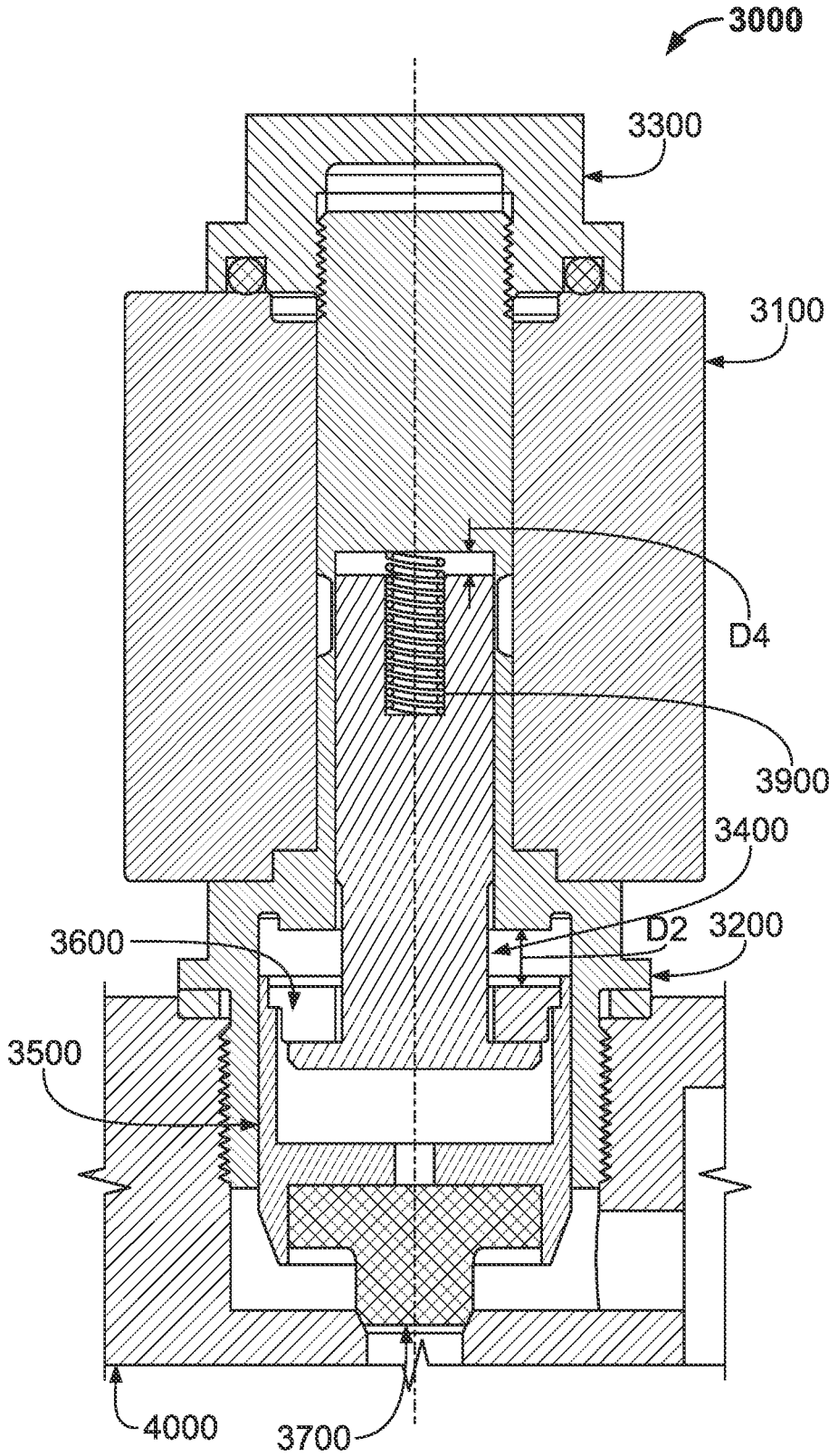

FIG. 18B

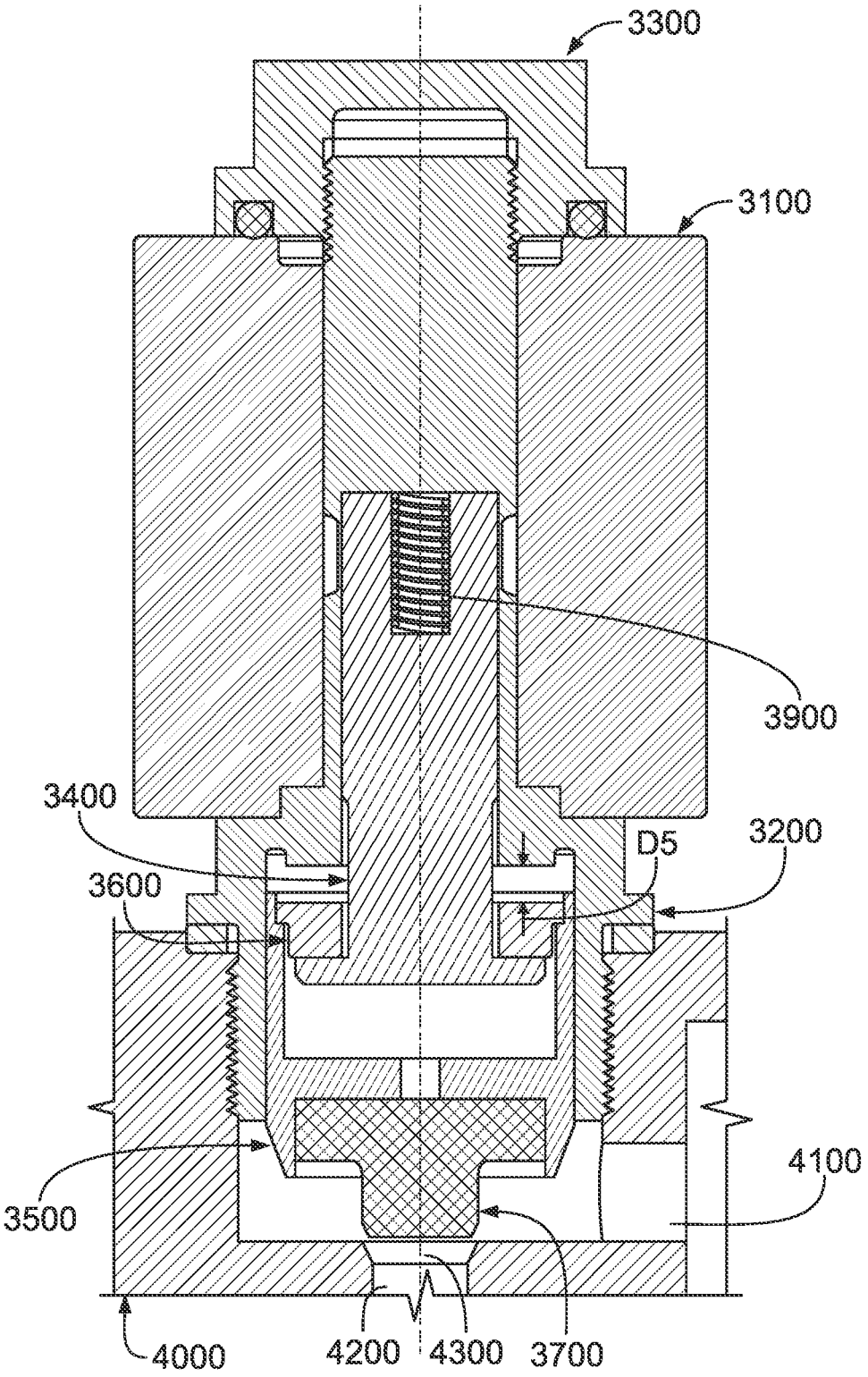
3300
3100
3900
3400
D5
3200
3600
3500
4100
4000
4200
4300
3700

FIG. 18C

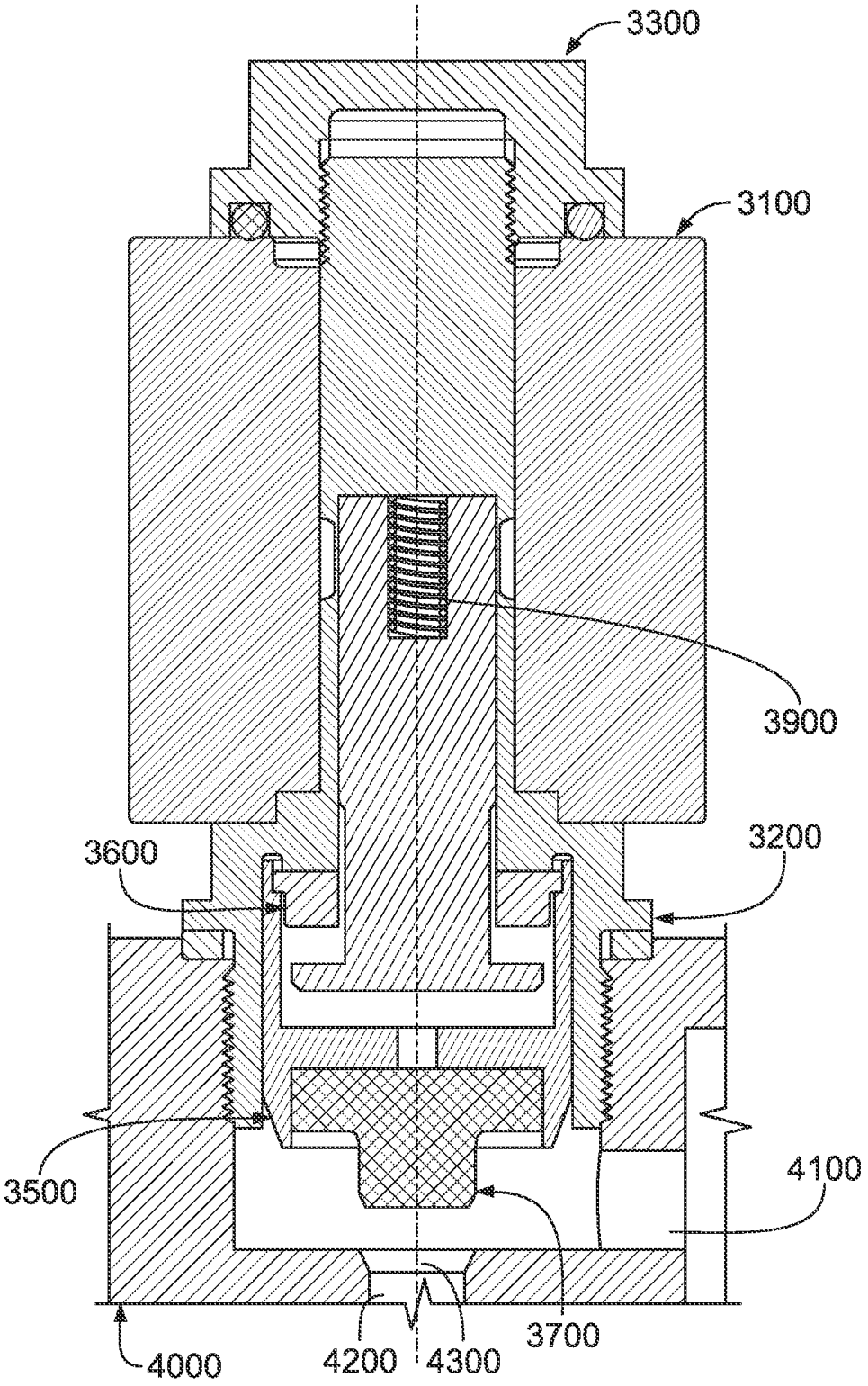

FIG. 18D

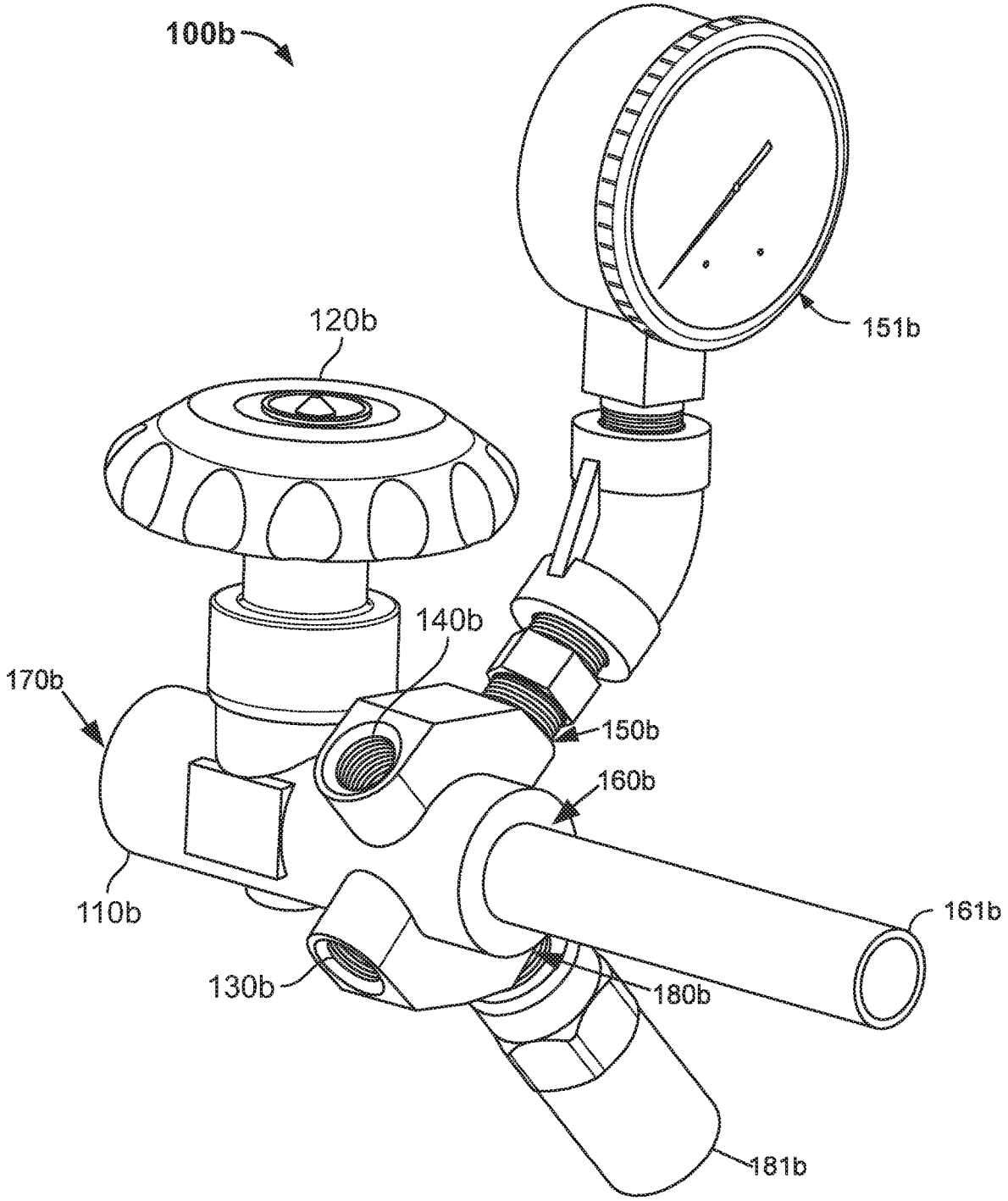

FIG. 19

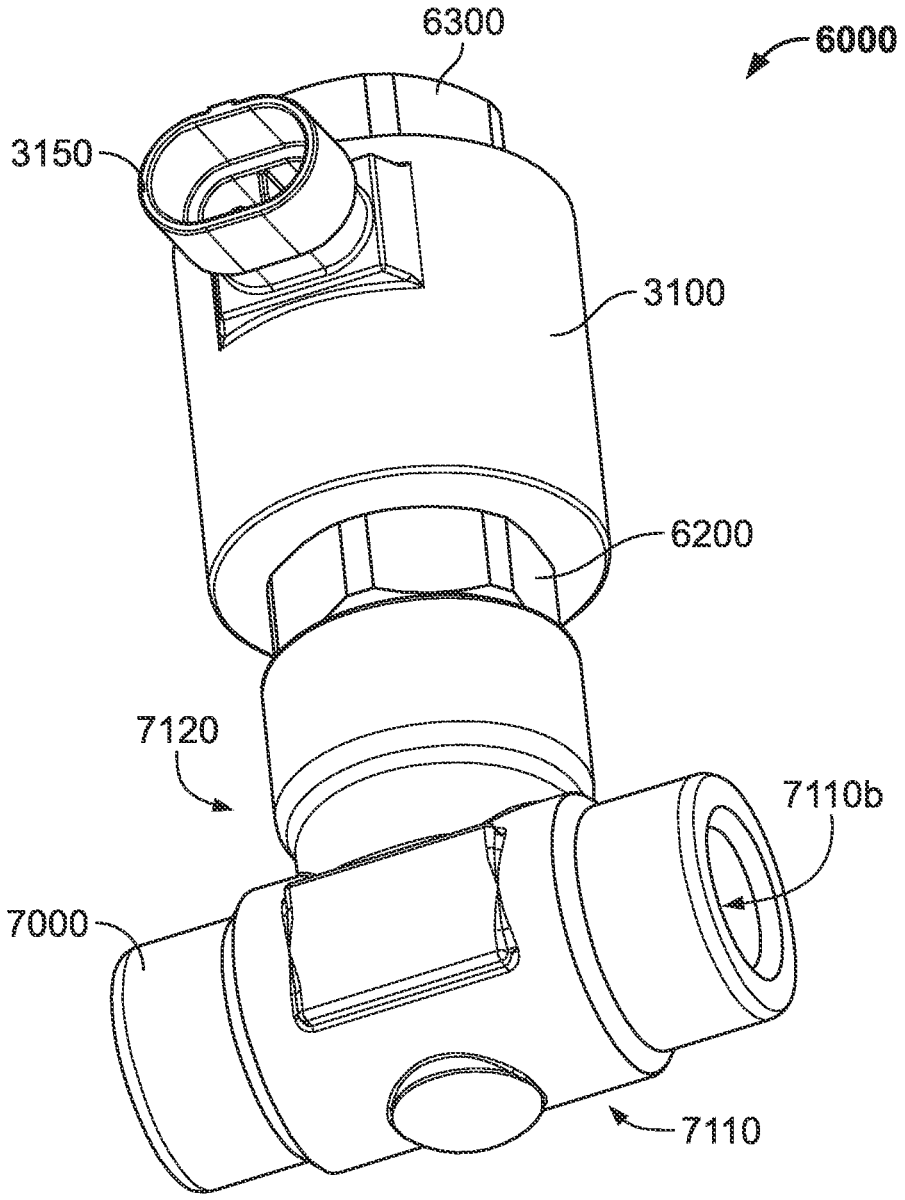

FIG. 20

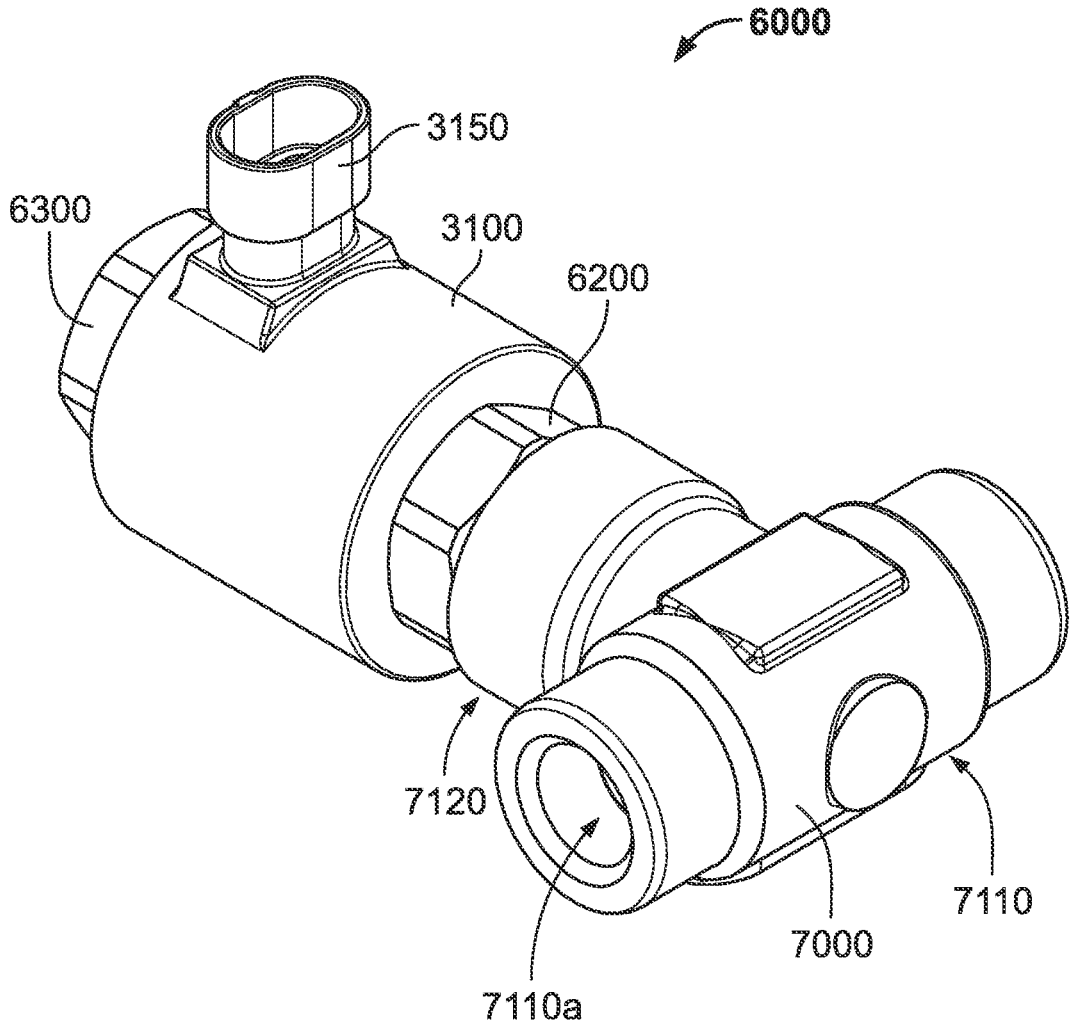

FIG. 21

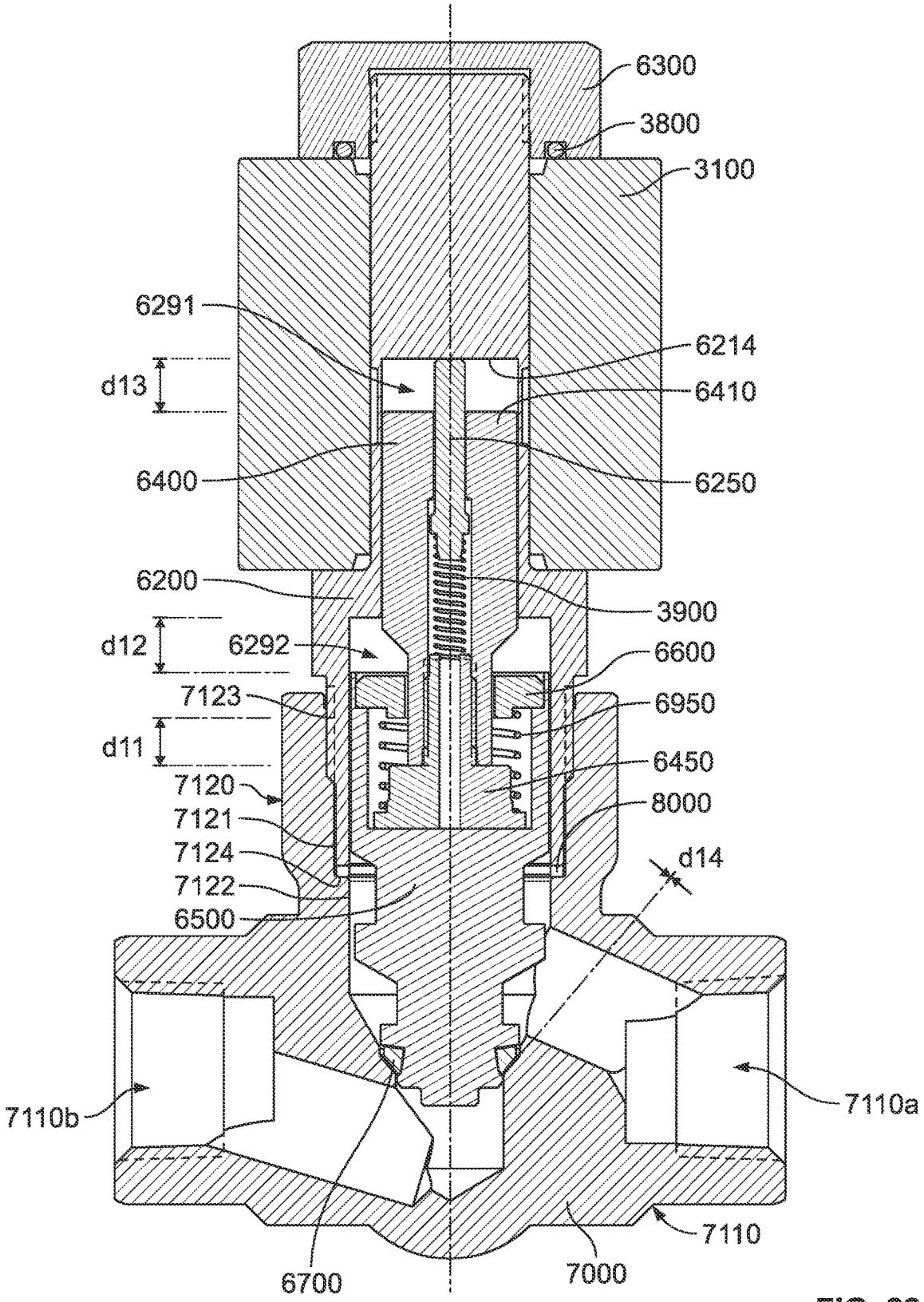
6300
3800
3100
6291
6214
d13
6410
6400
6250
6200
3900
d12
6292
6600
7123
6950
d11
6450
7120
8000
7121
7124
d14
7122
6500
7110b
7110a
7110
6700
7000

FIG. 22A

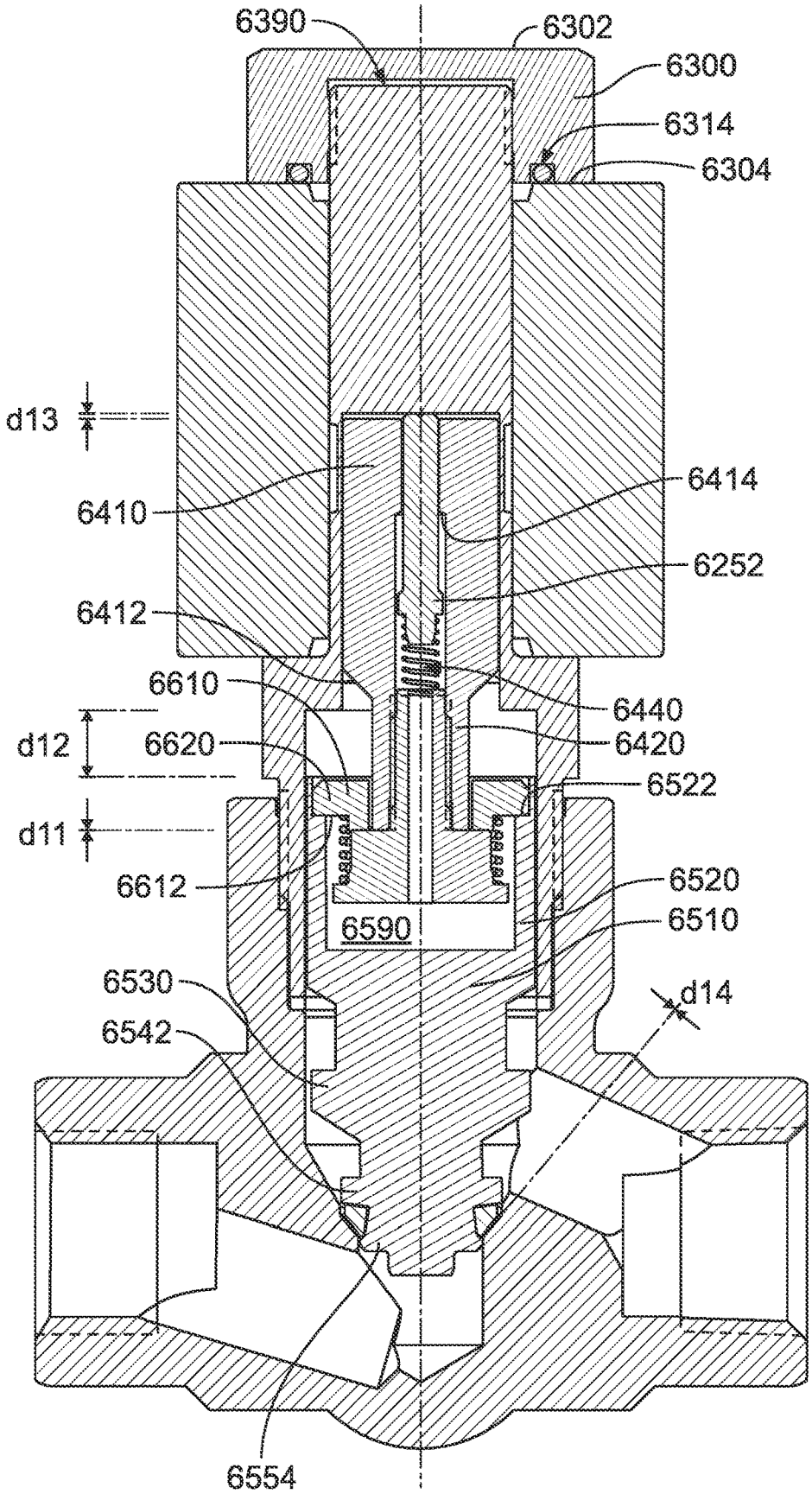
6390
6302
6300
6314
6304
d13
6410
6414
6252
6412
6610
6440
d12
6620
6420
6522
d11
6612
6520
6590
6510
6530
d14
6542
6554

FIG. 22B

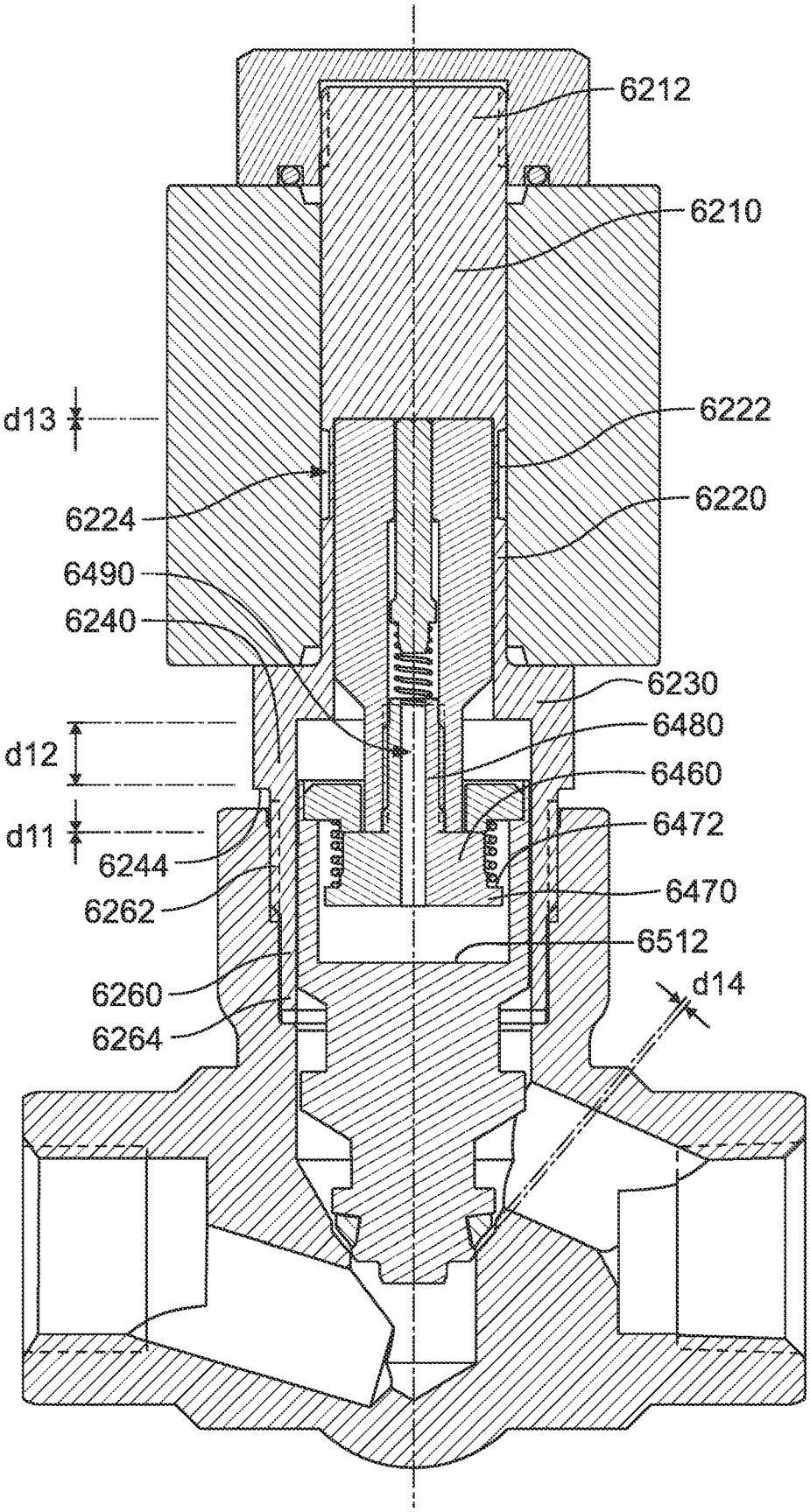
6212
6210
d13
6222
6224
6220
6490
6240
6230
6480
d12
6460
d11
6472
6244
6262
6470
6512
6260
d14
6264

FIG. 22C

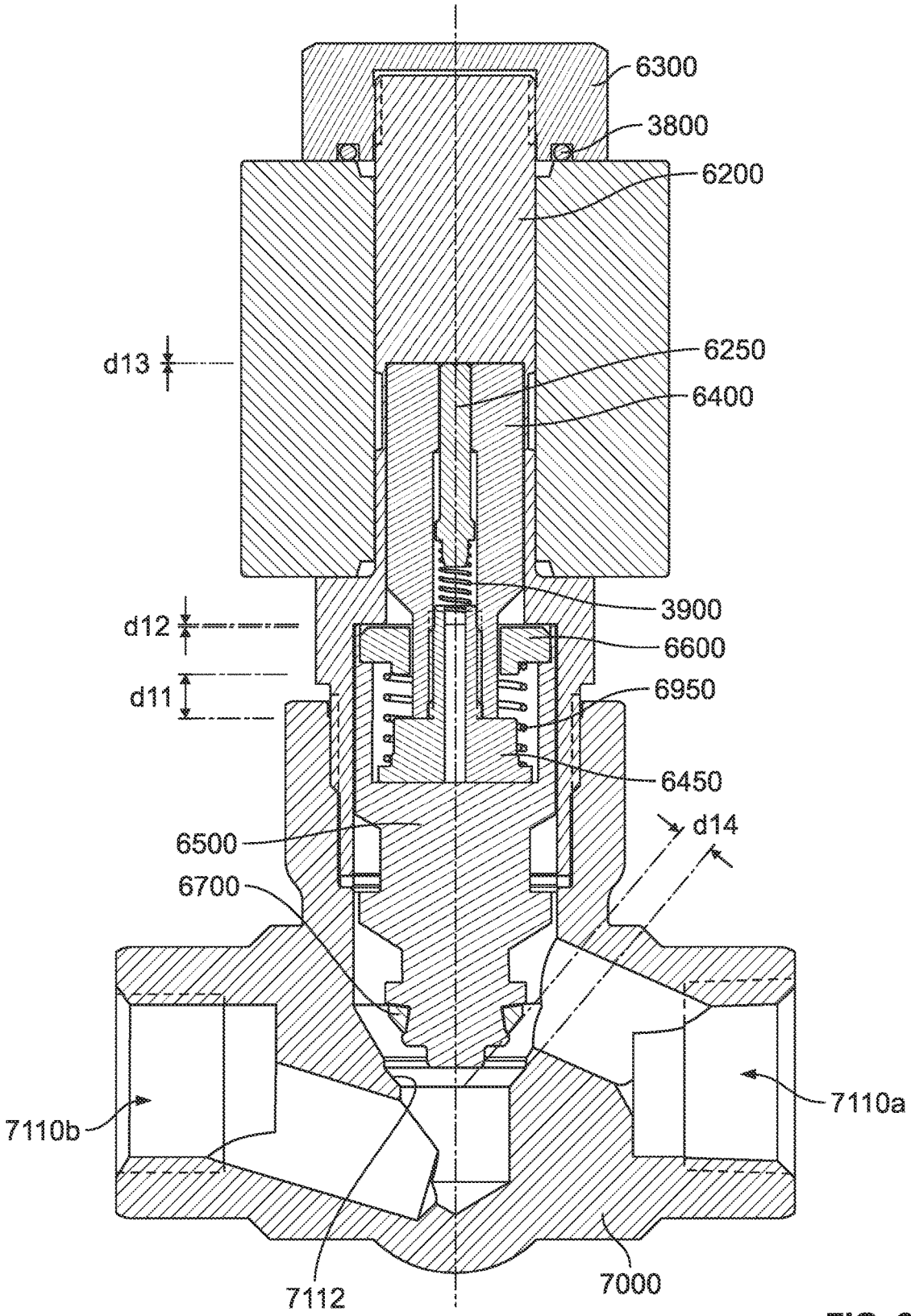
6300
3800
6200
d13
6250
6400
3900
d12
6600
d11
6950
6450
6500
d14
6700
7110b
7110a
7112
7000

FIG. 22D

CRYOGENIC CYLINDER CONTROL SYSTEM, GLOBE VALVE, AND SOLENOID VALVE

CROSS-REFERENCE

[0001] This application is a continuation of U.S. patent application Ser. No. 18/169,648, filed on Feb. 15, 2023, which is a continuation of U.S. patent application Ser. No. 16/624,239, now U.S. Pat. No. 11,592,120, filed on Dec. 18, 2019, which claims priority to International Patent Application No. PCT/CN2018/091084, filed on Jun. 13, 2018, and International Patent Application No. PCT/CN2017/089805, filed on Jun. 23, 2017. The contents of each application are incorporated by reference herein in their entirety.

TECHNICAL FIELD

[0002] This disclosure generally relates to a cryogenic cylinder control system for regulating fluid in a cryogenic cylinder, a globe valve for regulating fluid flow, and a solenoid valve for regulating fluid flow.

BACKGROUND

[0003] Cryogenic cylinder control systems include several components welded to a cryogenic cylinder and used to regulate fluid in the cryogenic cylinder. A cryogenic cylinder generally houses liquid (such as liquid natural gas) along with gas in a head space above the liquid. A typical cryogenic cylinder control system includes various pressure relief devices (such as valves and/or burst discs) to release pressure in the head space when it exceeds a certain threshold. A typical cryogenic cylinder control system also includes a pressure-building circuit comprised of multiple valves and a vaporizer coil to convert some of the liquid within the cryogenic cylinder to gas and to introduce the gas into the head space within the cryogenic cylinder. A typical cryogenic cylinder control system also includes an economizer circuit including multiple valves used to dispense overpressure gas from the head space within the cryogenic cylinder to a user device.

[0004] Typical globe valves are used to convey and regulate the flow of fluid. A typical globe valve includes a valve body that defines an inlet in fluid communication with an outlet and a valve seat between the inlet and the outlet. A typical globe valve includes a hand wheel attached to one end of a valve stem and a seat disc connected to the other end of the valve stem. The valve stem is movable via rotation of the hand wheel between a closed position in which the seat disc sealingly engages the valve seat to prevent fluid from flowing from the inlet to the outlet and an open position in which the seat disc is disengaged from the valve seat to enable fluid to flow from the inlet to the outlet.

[0005] Typical solenoid valves are used to regulate the flow of fluid through a valve body. A typical solenoid valve is mounted to the valve body and includes an electromagnetic coil that is energizable to either open (in the case of a normally closed valve) or close (in the case of a normally open valve) the valve. This opening or closing either prevents or enables fluid flow past the solenoid valve, depending on the configuration.

SUMMARY

[0006] Various embodiments of the present disclosure provide a cryogenic cylinder control system for regulating fluid within a cryogenic cylinder. The cryogenic cylinder control system comprises a pressure relief and vent module fluidly connectable to a head space above liquid within the cryogenic cylinder, a manual valve module fluidly connectable to the liquid within the cryogenic cylinder and to an external device, a solenoid valve module fluidly connectable to the manual valve module and to the head space within the cryogenic cylinder, a build-up coil fluidly connectable to the manual valve module and to the solenoid valve module, and a controller operatively connected to the solenoid valve module to control fluid flow through the solenoid valve module.

[0007] In operation, the pressure relief and vent module is configured to protect the cryogenic cylinder from overpressurization and to enable an operator to manually vent gas from inside the cryogenic cylinder. In operation, components of the manual valve module and the solenoid valve module form a pressure-building circuit that enables an operator to increase the gas pressure within the cryogenic cylinder by vaporizing some of the liquid in the cryogenic cylinder into gas via the build-up coil and to introduce the gas into the cryogenic cylinder. Components of the manual valve module enable the operator to dispense liquid from within the cryogenic cylinder to the external device. Components of the manual valve module and components of the solenoid valve module form an economizer circuit that enables an operator to dispense gas from within the cryogenic cylinder to the external device.

[0008] This application is defined by the appended claims. The description summarizes aspects of exemplary embodiments and should not be used to limit the claims. Other implementations are contemplated in accordance with the techniques described herein, as will be apparent upon examination of the following drawings and detailed description, and such implementations are intended to be within the scope of this application.

BRIEF DESCRIPTION OF THE DRAWINGS

[0009] FIG. **1** is a block diagram of one embodiment of the cryogenic cylinder control system of the present disclosure.

[0010] FIG. **2** is a block diagram of the cryogenic cylinder control system of FIG. **1** showing fluid flow through the cryogenic cylinder control system when the build-up valve is in the open configuration, the build-up solenoid valve is energized, and the economizer solenoid valve is not energized.

[0011] FIG. **3** is a block diagram of the cryogenic cylinder control system of FIG. **1** showing fluid flow through the cryogenic cylinder control system when the service valve is in the open configuration, the economizer solenoid valve is energized, and the build-up solenoid valve is not energized.

[0012] FIG. **4** is a block diagram of the cryogenic cylinder control system of FIG. **1** showing fluid flow through the cryogenic cylinder control system when the service valve is in the open configuration and the build-up and economizer solenoid valves are not energized.

[0013] FIG. **5** is a cross-sectional view of one embodiment of the globe valve of the present disclosure.

[0014] FIG. **6**A is a cross-sectional view of the valve body of the globe valve of FIG. **5**.

[0015] FIG. **6**B is a perspective view of the valve body of FIG. **6**A.

[0016] FIG. **7**A is a cross-sectional view of the gland nut of the globe valve of FIG. **5**.

[0017] FIG. **7**B is a perspective view of the gland nut of FIG. **7**A.

[0018] FIG. **8**A is a cross-sectional view of the upper spindle of the globe valve of FIG. **5**.

[0019] FIG. **8**B is a perspective view of the upper spindle of FIG. **8**A.

[0020] FIG. **9**A is a cross-sectional view of the lower spindle of the globe valve of FIG.

[0021] FIG. **9**B is a perspective view of the lower spindle of FIG. **9**A.

[0022] FIG. **10** is a cross-sectional view of one embodiment of the solenoid valve assembly of the present disclosure.

[0023] FIG. **11** is a cross-sectional view of the coil assembly of the solenoid valve assembly of FIG. **10**.

[0024] FIG. **12** is a cross-sectional view of the cartridge of the solenoid valve assembly of FIG. **10**.

[0025] FIG. **13** is a cross-sectional view of the nut of the solenoid valve assembly of FIG. **10**.

[0026] FIG. **14** is a cross-sectional view of the plunger of the solenoid valve assembly of FIG. **10**.

[0027] FIG. **15** is a cross-sectional view of the poppet of the solenoid valve assembly of FIG. **10**.

[0028] FIG. **16** is a cross-sectional view of the retainer of the solenoid valve assembly of FIG. **10**.

[0029] FIG. **17** is a cross-sectional view of the seat disc of the solenoid valve assembly of FIG. **10**.

[0030] FIG. **18**A is a cross-sectional view of the solenoid valve assembly of FIG. **10** in which the solenoid valve is in a closed configuration.

[0031] FIG. **18**B is a cross-sectional view of the solenoid valve assembly of FIG. **10** in which the solenoid valve is in a first intermediate configuration.

[0032] FIG. **18**C is a cross-sectional view of the solenoid valve assembly of FIG. **10** in which the solenoid valve is in a second intermediate configuration.

[0033] FIG. **18**D is a cross-sectional view of the solenoid valve assembly of FIG. **10** in which the solenoid valve is in an open configuration.

[0034] FIG. **19** is a perspective view of another embodiment of the pressure relief and vent module of the present disclosure.

[0035] FIG. **20** is a perspective view of a second embodiment of the solenoid valve assembly of the present disclosure.

[0036] FIG. **21** is another perspective view of the second embodiment of the solenoid valve assembly of the present disclosure.

[0037] FIG. **22**A is a cross-sectional view of the solenoid valve assembly of FIGS. **20** and **21** in which the solenoid valve is in a closed configuration.

[0038] FIG. **22**B is a cross-sectional view of the solenoid valve assembly of FIGS. **20** and **21** in which the solenoid valve is in an intermediate configuration.

[0039] FIG. **22**C is a cross-sectional view of the solenoid valve assembly of FIGS. **20** and **21** in which the solenoid valve is in a partially open configuration.

[0040] FIG. **22**D is a cross-sectional view of the solenoid valve assembly of FIGS. **20** and **21** in which the solenoid valve is in a fully open configuration.

DETAILED DESCRIPTION

[0041] The description that follows describes, illustrates and exemplifies one or more embodiments of the present disclosure in accordance with its principles. This description is not provided to limit the present disclosure to the embodiments described herein, but rather to explain and teach the principles of the present disclosure in order to enable one of ordinary skill in the art to understand these principles and, with that understanding, be able to apply them to practice not only the embodiments described herein but also other embodiments that may come to mind in accordance with these principles.

[0042] The scope of the present disclosure is intended to cover all such embodiments that may fall within the scope of the appended claims either literally or under the doctrine of equivalents. The specification describes exemplary embodiments that are not intended to limit the claims. Features described in the specification but not recited in the claims are not intended to limit the claims.

[0043] In the description and drawings, like or substantially similar elements may be labeled with the same reference numerals. Sometimes these elements may be labeled with differing numbers, such as in cases in which such labeling facilitates a more clear description. Additionally, the drawings set forth herein are not necessarily drawn to scale, and in some instances proportions may have been exaggerated to more clearly depict certain features. Such labeling and drawing practices do not necessarily implicate an underlying substantive purpose.

[0044] Some features may be described using relative terms such as top, bottom, vertical, rightward, leftward, etc. These relative terms are only for reference with respect to the drawings and are not meant to limit the disclosed embodiments. More specifically, the components depicted in the drawings may be oriented in various directions in practice, and the relative orientation of features may vary accordingly.

[0045] As stated above, the present specification is intended to be taken as a whole and interpreted in accordance with the principles of the present disclosure as taught herein and understood by one of ordinary skill in the art.

[0046] FIG. **1** illustrates one example embodiment of a cryogenic cylinder control system **10** of the present disclosure. The cryogenic cylinder control system **10** is fluidly connectable to a cryogenic cylinder **1000** and usable to regulate the liquid and the gas stored within. The portion of the interior of the cryogenic cylinder **1000** that houses the liquid is referred to herein as the liquid-housing portion **1000***a*, and the portion of the interior of the cryogenic cylinder **1000** that houses the gas is referred to herein as the gas-housing portion **1000***b*. The volumes of the liquid- and gas-housing portions **1000***a* and **1000***b* may change as liquid and gas is added to and dispensed from the cryogenic cylinder **1000**. In this embodiment, the cryogenic cylinder control system **10** includes a pressure relief and vent module **100**, a manual valve module **200**, a solenoid valve module **300**, a build-up coil **400**, a pressure sensor **500**, a controller **510**, and a fill valve **600**.

[0047] The pressure relief and vent module **100** includes a pressure relief and vent module housing **105**, a pressure relief valve **110** mounted to or integrated into the pressure relief and vent module housing **105**, a pressure relief device **120** mounted to or integrated into the pressure relief and vent module housing **105**, a vent valve **130** mounted to or integrated into the pressure relief and vent module housing **105**, and a vent receptacle **140** mounted to or integrated into the pressure relief and vent module housing **105**.

[0048] The pressure relief valve **110** may be any suitable reclosing pressure relief valve that has an inlet and an outlet and that is movable between an open configuration and a closed configuration. In this embodiment, the pressure-relief valve **110** is a spring-loaded pressure relief valve. A suitable biasing member normally biases the pressure relief valve **110** to the closed configuration to prevent fluid from flowing through the pressure relief valve **110** from its inlet to its outlet. When the pressure of the fluid at the inlet of the pressure relief valve **110** exceeds a first pressure threshold P1, such as 275 pounds per square inch (psi) (or any other suitable value), the fluid forces the pressure relief valve **110** to move from the closed configuration to the open configuration to enable fluid to flow through the pressure relief valve **110** from its inlet to its outlet. Afterwards, when the pressure of the fluid at the inlet falls below the first pressure threshold, the biasing member forces the pressure relief valve **110** to move from the open configuration to the closed configuration to again prevent fluid from flowing through the pressure relief valve **110** from its inlet to its outlet.

[0049] The pressure relief device **120** may be any suitable non-reclosing pressure relief device, such as a rupture disc. The pressure relief device **120** has an inlet and, when intact, is configured to prevent fluid from flowing from the inlet through the pressure relief device **120**. When the pressure of the fluid at the inlet exceeds a second pressure threshold P2 greater than the first pressure threshold P1, such as 350 psi (or any other suitable value), the pressure relief device **120** ruptures or otherwise permanently deforms to form an outlet to enable fluid to flow through the (ruptured) pressure relief device **120** from its inlet to its outlet. In other embodiments, the pressure relief device **120** may be any suitable pressure relief device, such as a reclosing pressure relief valve.

[0050] The vent valve **130** may be any suitable valve that has an inlet and an outlet and that is movable between an open configuration and a closed configuration. In this embodiment, the vent valve **130** is a manually operable valve that enables an operator to manually cause the vent valve **130** to move between the open and closed configurations, such as by turning a hand-wheel. When the vent valve **130** is in the open configuration, fluid can flow through the vent valve **130** from its inlet to its outlet. When the vent valve **130** is in the closed configuration, the vent valve **130** prevents fluid from flowing through the vent valve **130** from its inlet to its outlet.

[0051] The vent receptacle **140** may be any suitable device that has an inlet and an outlet that is fluidly connectable to an external device (such as a filling station device) via a threaded connector, a quick-release connector, or any other suitable connector.

[0052] The manual valve module **200** includes a manual valve module housing **205**, a build-up valve **210** mounted to or integrated into the manual valve module housing **205**, a check valve **220** mounted to or integrated into the manual valve module housing **205**, a service valve **230** mounted to or integrated into the manual valve module housing **205**, and an excess flow valve **240** mounted to or integrated into the manual valve module housing **205**.

[0053] The build-up valve **210** may be any suitable valve that has an inlet and an outlet and that is movable between an open configuration and a closed configuration, such as the valve described below with respect to FIGS. **5-9**B. In this embodiment, the build-up valve **210** is a manually operable valve that enables an operator to manually cause the build-up valve **210** to move between the open and closed configurations, such as by turning a hand-wheel or using a tool to rotate a component of the build-up valve **210**. When the build-up valve **210** is in the open configuration, fluid can flow through the build-up valve **210** from its inlet to its outlet. When the build-up valve **210** is in the closed configuration, the build-up valve **210** prevents fluid from flowing through the build-up valve **210** from its inlet to its outlet.

[0054] The check valve **220** may be any suitable check valve, such as a spring-loaded check valve, that has an inlet and an outlet and that is configured to enable fluid to flow from its inlet to its outlet and to prevent fluid from flowing from its outlet to its inlet.

[0055] The service valve **230** may be any suitable valve that has an inlet and an outlet and that is movable between an open configuration and a closed configuration, such as the valve described below with respect to FIGS. **5-9**B. In this embodiment, the service valve **230** is a manually operable valve that enables an operator to manually cause the service valve **230** to move between the open and closed configurations, such as by turning a hand-wheel or using a tool to rotate a component of the service valve **230**. When the service valve **230** is in the open configuration, fluid can flow through the service valve **230** from its inlet to its outlet. When the service valve **230** is in the closed configuration, the service valve **230** prevents fluid from flowing through the service valve **230** from its inlet to its outlet.

[0056] The excess flow valve **240** is any suitable excess flow valve that has an inlet and an outlet. The excess flow valve **240** is configured to prevent fluid flow from the inlet to the outlet (and vice-versa) when the flow rate of fluid through the excess flow valve **240** exceeds a preset threshold. The outlet of the excess flow valve **240** is fluidly connectable to a user device (not shown) to enable distribution of liquid or gas to the user device.

[0057] The solenoid valve module **300** includes a solenoid valve module body **305** that defines a build-up solenoid valve inlet **305***a*, an economizer solenoid valve outlet **305***b*, and a combination build-up solenoid valve outlet and economizer solenoid valve inlet **305***c*. A build-up solenoid valve **310** is mounted to the solenoid valve module body **305** between the build-up solenoid valve inlet **305***a* and the combination build-up solenoid valve outlet and economizer solenoid valve inlet **305***c*. An economizer solenoid valve **320** is mounted to the solenoid valve module body **305** between the combination build-up solenoid valve outlet and economizer solenoid valve inlet **305***c* and the economizer solenoid valve outlet **305***b*.

[0058] The build-up solenoid valve **310** may be any suitable solenoid valve, such as that shown in FIGS. **10-18**D below, that has an open configuration and a closed configuration, is biased to the closed configuration, and is energizable via electric current to move from the closed configuration to the open configuration. When the build-up solenoid valve **310** is in the closed configuration, the build-up solenoid valve **310** prevents fluid from flowing through the solenoid valve module **300** from the build-up solenoid valve inlet **305***a* to the combination build-up solenoid valve outlet and economizer solenoid valve inlet **305***c*. When the build-up solenoid valve **310** is in the open configuration, the build-up solenoid valve **310** enables fluid to flow through the solenoid valve module **300** from the build-up solenoid valve inlet **305***a* to the combination build-up solenoid valve outlet and economizer solenoid valve inlet **305***c*.

[0059] The economizer solenoid valve **320** may be any suitable solenoid valve, such as that shown in FIGS. **10-18**D below, that has an open configuration and a closed configuration, is biased to the closed configuration, and is energizable via electric current to move from the closed configuration to the open configuration. When the economizer solenoid valve **320** is in the closed configuration, the economizer solenoid valve **320** prevents fluid from flowing through the solenoid valve module **300** from the combination build-up solenoid valve outlet and economizer solenoid valve inlet **305***c* to the economizer solenoid valve outlet **305***b*. When the economizer solenoid valve **320** is in the open configuration, the economizer solenoid valve **320** enables fluid to flow through the solenoid valve module **300** from the combination build-up solenoid valve outlet and economizer solenoid valve inlet **305***c* to the economizer solenoid valve outlet **305***b*.

[0060] The build-up coil **400** is a suitable gas-vaporizing coil that has an inlet and an outlet and that is configured and positioned to convert liquid received from the cryogenic cylinder **1000** into gas. More specifically, the build-up coil **400** is positioned such that the liquid drawn from the cryogenic cylinder is exposed to temperatures above its boiling point such that the liquid vaporizes as it travels through the build-up coil **400**.

[0061] The pressure sensor **500** may be any suitable pressure sensor positioned within the gas-housing portion **1000***b* of the interior of the cryogenic cylinder **1000** and configured to sense the pressure PGAS of the gas within the gas-housing portion **1000***b*.

[0062] The controller **510** includes a processor and a memory. The processor is configured to execute program code or instructions stored in the memory to carry out certain functions, as described herein. The processor may be one or more of: a general-purpose processor, a content-addressable memory, a digital-signal processor, an application-specific integrated circuit, a field-programmable gate array, any suitable programmable logic device, discrete gate, or transistor logic, discrete hardware components, and any other suitable processing device. The memory is configured to store, maintain, and provide data as needed to support the functionality of the cryogenic cylinder control system **10**. For instance, in various embodiments, the memory stores program code or instructions executable by the processor to carry out certain functions. The memory may be any suitable data storage device, such as one or more of: volatile memory (e.g., RAM, which can include non-volatile RAM, magnetic RAM, ferroelectric RAM, and any other suitable forms); non-volatile memory (e.g., disk memory, FLASH memory, EPROMs, EEPROMs, memristor-based non-volatile solid-state memory, etc.); unalterable memory (e.g., EPROMs); and read-only memory. In certain embodiments, the functionality of the controller **510** can be integrated in a vehicle's engine control unit (ECU) module, in which case the cryogenic cylinder control system **10** does not include its own controller and instead relies on the vehicle's ECU module.

[0063] The fill valve **600** may be any suitable valve that has an inlet and an outlet and that is movable between an open configuration and a closed configuration. In this embodiment, the fill valve **600** enables an operator to cause the fill valve **600** to move between the open and closed configurations, such as by pushing a filling nozzle. When the fill valve **600** is in the open configuration, fluid can flow through the fill valve **600** from its inlet to its outlet. When the fill valve **600** is in the closed configuration, the fill valve **600** prevents fluid from flowing through the fill valve **600** from its inlet to its outlet. Additionally, the fill valve **600** includes or is in fluid communication with a suitable check valve **605** configured to prevent fluid from flowing from the cylinder gas housing portion **1000***b* to the outlet of the fill valve **600**.

[0064] The pressure relief and vent module **100** is in fluid communication with the gas-housing portion **1000***b* of the interior of the cryogenic cylinder **1000** and is fluidly connectable to atmosphere and to an external device, as described below. Although not shown for clarity, the cryogenic cylinder control system **10** and the pressure relief and vent module **100** include suitable connectors and fluid lines and/or define suitable fluid flow passages to enable the below-described fluidic connections.

[0065] More specifically, the inlet of the pressure relief valve **110** is in fluid communication with the gas-housing portion **1000***b* of the interior of the cryogenic cylinder **1000**, and the outlet of the pressure relief valve **110** is fluidly connectable to atmosphere. The inlet of the pressure relief device **120** is in fluid communication with the gas-housing portion **1000***b* of the interior of the cryogenic cylinder **1000**, and the outlet formed when the pressure relief device **120** is ruptured is in fluid communication with atmosphere. The inlet of the vent valve **130** is in fluid communication with the gas-housing portion **1000***b* of the interior of the cryogenic cylinder **1000**, and the outlet of the vent valve **130** is in fluid communication with the inlet of the vent receptacle **140**. The inlet of the vent receptacle **140** is in fluid communication with the outlet of the vent valve **130**, and the outlet of the vent receptacle **140** is fluidly connectable to an external device (not shown).

[0066] The manual valve module **200** is in fluid communication with the liquid- and gas-housing portions **1000***a* and **1000***b* of the interior of the cryogenic cylinder **1000**, the build-up coil **400**, and the solenoid valve module **300**, as described below. The manual valve module **200** is fluidly connectable to a user device to enable distribution of liquid or gas to the user device, as described below. Although not shown for clarity, the cryogenic cylinder control system **10** and the manual valve module **200** include suitable connectors and fluid lines and/or define suitable fluid flow passages to enable the below-described fluidic connections.

[0067] More specifically, the inlet of the build-up valve **210** is in fluid communication with the liquid-housing portion **1000***a* of the interior of the cryogenic cylinder **1000**, and the outlet of the build-up valve **210** is in fluid communication with the inlet of the build-up coil **400**. The inlet of the check valve **220** is in fluid communication with the liquid-housing portion **1000***a* of the interior of the cryogenic cylinder **1000**, and the outlet of the check valve **220** is in fluid communication with both the inlet of the service valve **230** and the economizer solenoid valve outlet **305***b* of the economizer solenoid valve housing **305**. The inlet of the service valve **230** is in fluid communication with both the economizer solenoid valve outlet **305***b* and the outlet of the check valve **220**. The outlet of the service valve **230** is in fluid communication with the inlet of the excess flow valve **240**. The outlet of the excess flow valve **240** is fluidly connectable to the user device to enable distribution of liquid or gas to the user device (as described below).

[0068] The solenoid valve module **300** is in fluid communication with the gas-housing portion **1000***b* of the interior

of the cryogenic cylinder **1000**, the build-up coil **400**, and the manual valve module **200**, as described below. Although not shown for clarity, the cryogenic cylinder control system **10** and the solenoid valve module **300** include suitable connectors and fluid lines and/or define suitable fluid flow passages to enable the below-described fluidic connections.

[0069] More specifically, the build-up solenoid valve inlet **305***a* is in fluid communication with the outlet of the build-up coil **400**. The economizer solenoid valve outlet **305***b* is in fluid communication with both the outlet of the check valve **220** and the inlet of the service valve **230**. The combination build-up solenoid valve outlet and economizer solenoid valve inlet **305***c* is in fluid communication with the gas-housing portion **1000***b* of the interior of the cryogenic cylinder **1000**. In other embodiments, the build-up coil **400** is located between the build-up solenoid valve **310** and the combination build-up solenoid valve outlet and economizer solenoid valve inlet **305***c*.

[0070] The pressure sensor **500** is communicatively connected to the controller **510** such that the pressure sensor **500** can send the sensed pressure PGAS to the controller **510**.

[0071] The controller **510** is operatively connected to the build-up solenoid valve **310** and the economizer solenoid valve **320** to independently control those solenoid valves to move from their respective closed configurations to their respective open configurations based on the sensed pressure PGAS. Specifically, the controller **510** is operatively connected to the build-up solenoid valve **310** and the economizer solenoid valve **320** to independently energize the coils of those solenoid valves when PGAS is at certain levels. The controller **510** is configured to energize the coil of the build-up solenoid valve **310** (to cause it to move to its open configuration) when the pressure PGAS<P3. In this embodiment, P3 is 125 psi, though it may be any other suitable value in other embodiments. The controller **510** is configured to energize the coil of the economizer solenoid valve **320** (to cause it to move to its open configuration) when the pressure PGAS>P4. In this embodiment, P4 is 140 psi, though it may be any other suitable value in other embodiments. Since P4>P3, in this embodiment the controller **510** is not configured to energize the coils of the build-up and economizer solenoid valves **310** and **320** at the same time, and the build-up and economizer solenoid valves **310** and **320** thus cannot be in their respective open configurations at the same time.

[0072] The fill valve **600** is in fluid communication with the gas-housing portion **1000***b* of the interior of the cryogenic cylinder **1000** via the check valve **605**.

[0073] The components of the cryogenic cylinder control system **10** are attached to the cryogenic cylinder **1000** via four connection ports welded to the cryogenic cylinder **1000**. The fill valve **600** is attached to a first connection port, which is in fluid communication with the gas-housing portion **1000***b*. The manual valve module **200** is attached to both second and third connection ports, both of which are in fluid communication with the liquid-housing portion **1000***a*. The solenoid valve module **300** and the pressure relief and vent module **100** are attached to a t-junction or other suitable branched component that's attached to the fourth connection port, which is in fluid communication with the gas-housing portion **1000***b*.

[0074] In operation, the pressure relief and vent module **100** is configured to protect the cryogenic cylinder **1000** from over-pressurization and to enable an operator to manually vent the gas from the gas-housing portion **1000***b* of the interior of the cryogenic cylinder **1000**.

[0075] More specifically, the pressure relief valve **110** prevents gas from escaping from the gas-housing portion **1000***b* of the interior of the cryogenic cylinder **1000** to atmosphere through the pressure relief valve **110** so long as PGAS<P1. Once PGAS exceeds P1, the gas forces the pressure relief valve **110** to move from its closed configuration to its open configuration. This fluidly connects the gas-housing portion **1000***b* of the interior of the cryogenic cylinder **1000** to atmosphere and enables the gas to escape through the pressure relief valve **110** to atmosphere to lower the pressure in the gas-housing portion **1000***b* of the interior of the cryogenic cylinder **1000**.

[0076] Pre-rupture, the pressure relief device **120** prevents gas from escaping from the gas-housing portion **1000***b* of the interior of the cryogenic cylinder **1000** to atmosphere through the pressure relief device **120** so long as PGAS<P2, where P2>P1. Once PGAS exceeds P2, the gas forces the pressure relief device **120** to rupture or permanently deform to form an outlet. This fluidly connects the gas-housing portion **1000***b* of the interior of the cryogenic cylinder **1000** to atmosphere and enables the gas to escape through the pressure relief device **120** to atmosphere to lower the pressure in the gas-housing portion **1000***b* of the interior of the cryogenic cylinder **1000**.

[0077] When in the closed configuration, the vent valve **130** prevents gas from traveling from the gas-housing portion **1000***b* of the interior of the cryogenic cylinder **1000** to the vent receptacle **140**. When in the open configuration, the vent valve **130** enables gas to travel from the gas-housing portion **1000***b* of the interior of the cryogenic cylinder **1000** to the vent receptacle **140**.

[0078] The vent receptacle **140** enables gas to flow therethrough either to atmosphere or into an external device connected to the vent receptacle. For instance, while liquid is being added to the cryogenic cylinder **1000**, the vent receptacle may be fluidly connected to a filling station to enable the gas to be vented from the gas-housing portion **1000***b* of the interior of the cryogenic cylinder **1000**.

[0079] In operation, components of the manual valve module **200** and the solenoid valve module **300** form a pressure-building circuit that enables an operator to increase the pressure PGAS of the gas in the gas-housing portion **1000***b* of the interior of the cryogenic cylinder **1000** by vaporizing some of the liquid in the liquid-housing portion **1000***a* of the interior of the cryogenic cylinder **1000** into gas via the build-up coil **400** and to introduce the gas into the gas-housing portion **1000***b* of the cryogenic cylinder **1000**. Components of the manual valve module **200** enable the operator to dispense liquid from the liquid-housing portion **1000***a* of the cryogenic cylinder **1000** to the external device. Components of the manual valve module **200** and components of the solenoid valve module **300** form an economizer circuit that enables an operator to dispense gas from within the gas-housing portion **1000***b* of the cryogenic cylinder **1000** to the external device.

[0080] As shown in FIG. **2**, when PGAS<P3 and the operator desires to increase the pressure of the gas in the gas-housing portion **1000***b* of the interior of the cryogenic cylinder **1000**, the operator causes the build-up valve **210** to move from its closed configuration to its open configuration. This enables liquid to flow from the liquid-housing portion **1000***a* of the cryogenic cylinder **1000** to the build-up coil

400. The liquid vaporizes as it moves through the build-up coil **400**, and gas exits the build-up coil **400** and travels to the build-up solenoid valve inlet **305***a* of the solenoid valve module body **305**. Since PGAS<P3, the controller **510** energizes the coil of the build-up solenoid valve **310** such that the build-up solenoid valve **310** is in its open configuration. Additionally, since PGAS<P3 this means PGAS<P4, the controller **510** does not energize the coil of the economizer solenoid valve **320** and the economizer solenoid valve **320** is in its closed configuration. The gas thus travels through the solenoid valve module **300** from the build-up solenoid valve inlet **305***a* to the combination build-up solenoid valve outlet and economizer solenoid valve inlet **305***c*. From there, the gas travels into the gas-housing portion **1000***b* of the interior of the cryogenic cylinder **1000**.

[0081] When the operator desires to dispense liquid or gas from the cryogenic cylinder **1000** into a user device, the operator causes the service valve **230** to move from its closed configuration to its open configuration.

[0082] As shown in FIG. **3**, if PGAS>P4 when the service valve **230** is in the open configuration, the service valve **230** dispenses gas from the gas-housing portion **1000***b* of the interior of the cryogenic cylinder **1000**. Specifically, if PGAS>P4, the controller **510** energizes the coil of the economizer solenoid valve **320** such that the economizer solenoid valve **320** is in its open configuration. Additionally, since PGAS>P4 this means PGAS>P3, the controller **510** does not energize the coil of the build-up solenoid valve **310** and the build-up solenoid valve **310** is in its closed configuration. Since the service valve **230** is in its open configuration, gas flows from the gas-housing portion **1000***b* of the interior of the cryogenic cylinder **1000** and through the solenoid valve module **300** from the combination build-up solenoid valve outlet and economizer solenoid valve inlet **305***c* to the economizer solenoid valve outlet **305***b*. From there the gas travels through the service valve **230** and the excess flow valve **240** into the user device. The check valve **220** prevents the gas from flowing back into the cryogenic cylinder **1000**.

[0083] As shown in FIG. **4**, if PGAS<P4 when the service valve **230** is in the open configuration, the service valve **230** dispenses liquid from the liquid-housing portion **1000***a* of the interior of the cryogenic cylinder **1000**. Specifically, since PGAS<P4, the controller **510** does not energize the coil of the economizer solenoid valve **320** and the economizer solenoid valve **320** is in its closed configuration. Once the service valve **230** is in its open configuration, liquid flows from the liquid-housing portion **1000***a* of the interior of the cryogenic cylinder **1000** through the check valve **220** and into the service valve **230**. The liquid travels through the service valve **230** and the excess flow valve **240** and into the user device.

[0084] Although not shown, the cryogenic cylinder control system **10** includes or is connectable to a power source, such as a battery, to power the controller **510** and the solenoid valves **310** and **320**.

[0085] The cryogenic cylinder control system reduces the quantity of weld points to the cylinder from fourteen (as seen in various known cryogenic cylinder control systems) to four while reducing the quantity of components that must be assembled. This simplifies and speeds up installation by requiring significantly fewer welds. Fewer welds improve reliability and decreases down time by reducing the number of possible failure points. Further, by combining various components into modules, the cryogenic cylinder control system saves installation space and reduces the quantity of connectors needed to connect each independent component. It also simplifies maintenance by enabling modules to be swapped out without cutting tubes or connectors welded to the cryogenic cylinder.

[0086] FIG. **5** shows a manually controlled globe valve **2000** that includes a valve body **2100**, a lower spindle **2200**, an upper spindle **2300**, a biasing member **2400**, a seat disc **2500**, a gland nut **2600**, a first sealing member **2700**, and a second sealing member **2800**. As described below, the globe valve **2000** is movable between a closed configuration and an open configuration.

[0087] As best shown in FIGS. **6**A and **6**B, the valve body **2100** includes a flow portion **2110** and a mounting portion **2120** transverse to the flow portion **2110**. The mounting portion **2120** has a longitudinal axis LAV. The flow portion **2110** includes multiple surfaces (not labeled) that together define a flow passage between an inlet **2110***a* and an outlet **2110***b*. A valve seat **2112** is positioned within the flow passage between the inlet **2110***a* and the outlet **2110***b*. The mounting portion **2120** includes a threaded cylindrical gland nut engaging surface **2122** and a threaded cylindrical lower spindle engaging surface **2124**.

[0088] The threaded cylindrical gland nut engaging surface **2122** (partially) defines a gland nut receiving cavity, and the threaded cylindrical lower spindle engaging surface **2124** (partially) defines a lower spindle receiving cavity.

[0089] In this embodiment, the valve body **2100** is made of brass, such as UNS C37700, though it may be made of any suitable material.

[0090] As best shown in FIGS. **7**A and **7**B, the gland nut **2600** includes an upper annular surface **2602**, a first inner cylindrical surface **2604**, a first annular sealing cavity defining surface **2606**, a cylindrical sealing cavity defining surface **2608**, a second annular sealing cavity defining surface **2610**, a second inner cylindrical surface **2612**, a first inner annular surface **2614**, a third inner cylindrical surface **2616**, a tapered first sealing member engaging surface **2618**, a first annular first sealing member engaging surface **2620**, a second annular first sealing member engaging surface **2622**, a cylindrical first sealing member engaging surface **2624**, a second inner annular surface **2626**, a tapered inner surface **2628**, a fourth inner cylindrical surface **2630**, an annular valve body engaging surface **2632**, a cylindrical threaded valve body engaging surface **2634**, and an outer cylindrical surface **2636**.

[0091] The first inner cylindrical surface **2604** extends longitudinally between the upper annular surface **2602** and the first annular sealing cavity defining surface **2606**. The first annular sealing cavity defining surface **2606** extends transversely between the first inner cylindrical surface **2604** and the cylindrical sealing cavity defining surface **2608**. The cylindrical sealing cavity defining surface **2608** extends longitudinally between the first annular sealing cavity defining surface **2606** and the second annular sealing cavity defining surface **2610**. The second annular sealing cavity defining surface **2610** extends transversely between the cylindrical sealing cavity defining surface **2608** and the second inner cylindrical surface **2612**. The second inner cylindrical surface **2612** extends longitudinally between the second annular sealing cavity defining surface **2610** and the first inner annular surface **2614**. The first inner annular surface **2614** extends transversely between the second inner

cylindrical surface **2612** and the third inner cylindrical surface **2616**. The third inner cylindrical surface **2616** extends longitudinally between the first inner annular surface **2614** and the tapered first sealing member engaging surface **2618**. The tapered first sealing member engaging surface **2618** extends angularly between the third inner cylindrical surface **2616** and the first annular first sealing member engaging surface **2620**. The first annular first sealing member engaging surface **2620** extends transversely between the tapered first sealing member engaging surface **2618** and the second annular first sealing member engaging surface **2622**. The second annular first sealing member engaging surface **2622** extends transversely between the first annular first sealing member engaging surface **2620** and the cylindrical first sealing member engaging surface **2624**. The cylindrical first sealing member engaging surface **2624** extends longitudinally between the second annular first sealing member engaging surface **2622** and the second inner annular surface **2626**. The second inner annular surface **2626** extends transversely between the cylindrical first sealing member engaging surface **2624** and the tapered inner surface **2628**. The tapered inner surface **2628** extends angularly between the second inner annular surface **2626** and the fourth inner cylindrical surface **2630**. The fourth inner cylindrical surface **2630** extends longitudinally between the tapered inner surface **2628** and the annular valve body engaging surface **2632**. The annular valve body engaging surface **2632** extends transversely between the fourth inner cylindrical surface **2630** and the threaded cylindrical valve body engaging surface **2634**. The threaded cylindrical valve body engaging surface **2634** extends longitudinally between the annular valve body engaging surface **2632** and the outer cylindrical surface **2636**. The outer cylindrical surface **2636** extends longitudinally between the threaded cylindrical valve body engaging surface **2634** and the upper annular surface **2602**.

[0092] The sealing-cavity defining surfaces **2606**, **2608**, and **2610** define an annular sealing member receiving cavity sized and shaped to partially receive the second sealing member **2800** (as described below).

[0093] In this embodiment, the gland nut **2600** is made of brass, such as UNS C36000, though it may be made of any suitable material.

[0094] As best shown in FIGS. **8**A and **8**B, the upper spindle **2300** includes a tool-engaging portion **2310**, a cylindrical portion **2320**, an annular portion **2330**, and a lower spindle-engaging portion **2340**. The cylindrical portion **2320** is between the tool-engaging portion **2310** and the annular portion **2330**, and the annular portion **2330** is between the cylindrical portion **2320** and the lower spindle-engaging portion **2340**.

[0095] The tool-engaging portion **2310** includes multiple circumferentially spaced flats **2312**. Similarly, the lower spindle-engaging portion **2340** includes multiple circumferentially spaced flats **2342**. Surfaces **2314***a*, **2314***b*, and **2314***c* define a bore that enables an operator to attach a hand wheel to the upper spindle **2300**. Surfaces **2344** and **2346** define a biasing member receiving bore sized to receive part of the biasing member **2400**.

[0096] In this embodiment, the upper spindle **2300** is made of brass, such as UNS C36000, though it may be made of any suitable material.

[0097] As best shown in FIGS. **9**A and **9**B, the lower spindle **2200** includes a threaded portion **2210** and a sealing portion **2220**. The threaded portion includes a threaded cylindrical valve body engaging surface **2212**. The sealing portion includes three seat disc defining surfaces **2222**, **2224**, and **2226** that define a seat disc receiving cavity sized and shaped to receive the seat disc **2500** (as described below). An upper spindle engaging surface **2230** defines an upper spindle receiving bore sized and shaped to receive the upper spindle **2300** (as described below).

[0098] In this embodiment, the lower spindle **2200** is made of brass, such as UNS C36000, though it may be made of any suitable material.

[0099] FIG. **5** shows the assembled globe valve **2000** in the open configuration. The threaded cylindrical valve body engaging surface **2212** of the lower spindle **2200** is threadably engaged to the threaded cylindrical lower spindle engaging surface **2124** of the valve body **2100**. The lower spindle-engaging portion **2340** of the upper spindle **2300** is received in the upper spindle receiving bore defined by the upper spindle engaging surface **2230** of the lower spindle **2200**. The biasing member **2400**—here a compression spring—is partly disposed in the biasing member-receiving bore defined by the upper spindle **2300** such that the biasing member **2400** extends between upper and lower spindles **2300** and **2200**. The elastomeric seat disc **2500** is disposed within the seat disc receiving cavity defined in the lower spindle **2200**.

[0100] The cylindrical threaded valve body engaging surface **2634** of the gland nut **2600** is threadably engaged to the threaded cylindrical gland nut engaging surface **2122** of the valve body **2100**. The first sealing member **2700** is made of an elastomeric material and is disposed around the cylindrical portion **2320** of the upper spindle **2300**. The biasing member **2400** forces the upper spindle **2300** upward such that the first sealing member **2700** sealingly engages the first sealing member engaging surfaces **2618**, **2620**, **2622**, and **2624**. The second sealing member **2800** is disposed in the second sealing member channel defined by the gland nut **2600** and sealingly engages the upper spindle **2300**.

[0101] As noted above, the globe valve **2000** is movable between an open configuration (FIG. **5**) and a closed configuration (not shown). When in the closed configuration, the seat disc **2500** sealingly engages the valve seat **2112** of the valve body **2100** and prevents fluid from flowing from the inlet **2110***a* to the outlet **2110***b*. When in the open configuration, the seat disc **2500** is disengaged from the valve seat **2112** and enables fluid to flow from the inlet **2110***a* to the outlet **2110***b*.

[0102] To move the globe valve **2000** between the closed configuration and the open configuration, an operator rotates the upper spindle **2300** relative to the gland nut **2600** and the valve body **2100**. The operator can do so by, for instance, engaging the flats **2312** of the tool engaging portion **2310** of the upper spindle **2300** with a tool, such as a wrench, and rotating the tool. In another example, the operator can mount a hand wheel to the tool engaging portion **2310** of the upper spindle **2300**.

[0103] More particularly, when the globe valve **2000** is in the open configuration, rotation of the upper spindle **2300** in a first direction causes the globe valve **2000** to move to the closed configuration. Specifically, rotation of the upper spindle **2300** in the first direction causes the upper spindle **2300** and the lower spindle **2200**—which is matingly engaged to the upper spindle **2300** via the upper spindle engaging surface **2230**—to rotate relative to the valve body

2100, the gland nut **2600**, the first sealing member **2700**, and the second sealing member **2800**. This causes the lower spindle **2200** to begin unthreading from the threaded cylindrical lower spindle engaging surface **2124** of the valve body **2100** and moving longitudinally away from the upper spindle **2300**. The biasing member **2400** exerts a biasing force on the upper spindle **2300** to ensure it remains sealingly engaged to the gland nut **2600** via the first sealing member **2700**. The operator stops rotating the upper spindle **2300** once the seat disc **2500** sealingly engages the valve seat **2112** of the valve body **2100**, at which point the globe valve **2000** is in the closed configuration.

[0104] Conversely, when the globe valve **2000** is in the closed configuration, rotation of the upper spindle **2300** in a second direction different from the first direction causes the globe valve **2000** to move to the open configuration. Specifically, rotation of the upper spindle **2300** in the second direction causes the upper spindle **2300** and the lower spindle **2200**—which is matingly engaged to the upper spindle **2300** via the upper spindle engaging surface **2230**—to rotate relative to the valve body **2100**, the gland nut **2600**, the first sealing member **2700**, and the second sealing member **2800**. This causes the lower spindle **2200** to begin threading back onto the threaded cylindrical lower spindle engaging surface **2124** of the valve body **2100** and moving longitudinally toward the upper spindle **2300**. The biasing member **2400** exerts a biasing force on the upper spindle **2300** to ensure it remains sealingly engaged to the gland nut **2600** via the first sealing member **2700**. The operator stops rotating the upper spindle **2300** once the lower spindle **2200** contacts the upper spindle **2300**, at which point the seat disc **2500** is disengaged from the valve seat and the globe valve **2000** is in the closed configuration.

[0105] Positioning the biasing member between the upper and lower spindles enables the biasing member to ensure adequate sealing. Specifically, the biasing force imparted to the upper spindle ensures the first sealing member sealingly engages the gland nut. The biasing force imparted to the lower spindle helps the seat disc sealingly engage the valve seat, particularly at cryogenic temperatures. Specifically, at cryogenic temperature the seat disc may shrink, which could cause leakage between the seat disc/valve seat interface when the globe valve is in the closed configuration. The biasing force imparted to the lower spindle compensates for the shrinkage to ensure proper sealing even at cryogenic temperature.

[0106] FIG. **10** shows an electrically controlled solenoid valve **3000** usable to control the flow of fluid through a valve body **4000**. The solenoid valve **3000** includes a coil assembly **3100**, a cartridge **3200**, a nut **3300**, a plunger **3400**, a seat disc holder **3500**, a retainer **3600**, a seat disc **3700**, a sealing member **3800**, and a biasing member **3900**. The solenoid valve **3000** has a longitudinal axis LAS.

[0107] As best shown in FIG. **11**, the coil assembly **3100** includes a coil housing **3100*a*** and an electric coil (not shown) within the coil housing **3100*a***.

[0108] The coil housing **3100*a*** includes an outer surface **3102**, an inner cylindrical surface **3104**, a first upper surface **3106**, an second upper surface **3108**, a third upper surface **3110**, a first lower surface **3112**, a second lower surface **3114**, and a third lower surface **3116**.

[0109] The outer surface **3102** extends longitudinally between the first upper surface **3106** and the first lower surface **3112**. The first upper surface **3106** extends transversely between the outer surface **3102** and the second upper surface **3108**. The second upper surface **3108** extends longitudinally between the first upper surface **3106** and the third upper surface **3110**. The third upper surface **3110** extends transversely between the second upper surface **3108** and the inner cylindrical surface **3104**. The inner cylindrical surface **3104** extends longitudinally between the third upper surface **3110** and the third lower surface **3116**. The third lower surface **3116** extends transversely between the inner cylindrical surface **3104** and the second lower surface **3114**. The second lower surface **3114** extends longitudinally between the third lower surface **3116** and the first lower surface **3112**. The first lower surface **3112** extends transversely between the second lower surface **3114** and the outer surface **3102**.

[0110] The inner cylindrical surface **3104** defines a cartridge-receiving bore sized and shaped to receive part of the cartridge **3200**.

[0111] In this embodiment, the coil housing **3100*a*** is made of plastic, though it may be made of any suitable material. The electric coil is made of copper wire (or any other suitable material) and is electrically connectable to a power source such that the power source can cause electric current to flow through the coil, thereby causing the coil to generate an electromagnetic force. In certain embodiments, the electric coil is a 10 to 12 Watt, 12 or 24 Volt DC coil.

[0112] As best shown in FIG. **12**, the cartridge **3200** includes an outer circular surface **3201**, a first outer cylindrical surface **3202** on which nut-engaging threads **3202*a*** are disposed, a second outer cylindrical surface **3204**, a third outer cylindrical surface **3206**, a first annular coil assembly engaging surface **3208**, a cylindrical coil assembly engaging surface **3210**, a second annular coil assembly engaging surface **3212**, a fourth outer cylindrical surface **3214**, a first outer annular surface **3216**, a fifth outer cylindrical surface **3218**, an annular valve body sealing surface **3220**, a sixth outer cylindrical surface **3222** on which valve-body-engaging threads **3222*a*** are disposed, a second outer annular surface **3224**, a cylindrical seat disc holder engaging surface **3226**, a first inner annular surface **3228**, a inner cylindrical surface **3230**, a annular retainer engaging surface **3232**, a cylindrical plunger stem engaging surface **3234**, and an circular plunger stem engaging surface **3236**.

[0113] The first outer cylindrical surface **3202** extends longitudinally between the outer circular surface **3201** and the second outer cylindrical surface **3204**. The second outer cylindrical surface **3204** extends longitudinally between (and is radially recessed relative to) the first outer cylindrical surface **3202** and the third outer cylindrical surface **3206**. The third outer cylindrical surface **3206** extends longitudinally between the second outer cylindrical surface **3204** and the first annular coil assembly engaging surface **3208**. The first annular coil assembly engaging surface **3208** extends transversely between the third outer cylindrical surface **3206** and the cylindrical coil assembly engaging surface **3210**. The cylindrical coil assembly engaging surface **3210** extends longitudinally between the first annular coil assembly engaging surface **3208** and the second annular coil assembly engaging surface **3212**. The second annular coil assembly engaging surface **3212** extends transversely between the cylindrical coil assembly engaging surface **3210** and the fourth outer cylindrical surface **3214**. The fourth outer cylindrical surface **3214** extends longitudinally between the second annular coil assembly engaging surface **3212** and the first outer annular surface **3216**. The first outer

annular surface **3216** extends transversely between the fourth outer cylindrical surface **3214** and the fifth outer cylindrical surface **3218**. The fifth outer cylindrical surface **3218** extends longitudinally between the first outer annular surface **3216** and the annular valve body sealing surface **3220**. The annular valve body sealing surface **3220** extends transversely between the fifth outer cylindrical surface **3218** and the sixth outer cylindrical surface **3222**. The sixth outer cylindrical surface **3222** extends longitudinally between the annular valve body sealing surface **3220** and the second outer annular surface **3224**. The second outer annular surface **3224** extends transversely between the sixth outer cylindrical surface **3222** and the cylindrical seat disc holder engaging surface **3226**. The cylindrical seat disc holder engaging surface **3226** extends longitudinally between the second outer annular surface **3224** and the first inner annular surface **3228**. The first inner annular surface **3228** extends transversely between the cylindrical seat disc holder engaging surface **3226** and the inner cylindrical surface **3230**. The inner cylindrical surface **3230** extends longitudinally between the first inner annular surface **3228** and the annular retainer engaging surface **3232**. The annular retainer engaging surface **3232** extends transversely between the inner cylindrical surface **3230** and the cylindrical plunger stem engaging surface **3234**. The cylindrical plunger stem engaging surface **3234** extends longitudinally between the annular retainer engaging surface **3232** and the circular plunger stem engaging surface **3236**.

[0114] The cylindrical seat disc holder engaging surface **3226**, the first inner annular surface **3228**, the inner cylindrical surface **3230**, and the annular retainer engaging surface **3232** form a plunger, retainer, and seat disc holder receiving cavity sized and shaped to receive the head and at least part of the stem of the plunger **3400**, the retainer **3600**, and at least part of the seat disc holder **3500**. The cylindrical plunger stem engaging surface **3234** and the circular plunger stem engaging surface **3236** form a stem receiving bore sized and shaped to receive part of the stem of the plunger **3400**.

[0115] In this embodiment, the cartridge **3200** is made of a ferromagnetic material, such as UNS S430000.

[0116] As best shown in FIG. **13**, the nut **3300** includes an outer circular surface **3302**, an outer hexagonal surface **3304**, an upper annular surface **3306**, an outer cylindrical surface **3308**, a annular coil assembly housing engaging surface **3310**, a first sealing-cavity-defining surface **3312**, a second sealing-cavity-defining surface **3314**, a third sealing-cavity-defining surface **3316**, a lower annular surface **3318**, a threaded cylindrical inner surface **3320**, and an inner circular surface **3322**.

[0117] The outer hexagonal surface **3304** extends longitudinally between the outer circular surface **3302** and the upper annular surface **3306**. The upper annular surface **3306** extends transversely between the outer hexagonal surface **3304** and the outer cylindrical surface **3308**. The outer cylindrical surface **3308** extends longitudinally between the upper annular surface **3306** and the annular coil assembly housing engaging surface **3310**. The annular coil assembly housing engaging surface **3310** extends transversely between the outer cylindrical surface **3308** and the first sealing-cavity-defining surface **3312**. The first sealing-cavity-defining surface **3312** extends longitudinally between the annular coil assembly housing engaging surface **3310** and the second sealing-cavity-defining surface **3314**. The second sealing-cavity-defining surface **3314** extends transversely between the first sealing-cavity-defining surface **3312** and the third sealing-cavity-defining surface **3316**. The third sealing-cavity-defining surface **3316** extends longitudinally between the second sealing-cavity-defining surface **3314** and the lower annular surface **3318**. The lower annular surface **3318** extends transversely between the third sealing-cavity-defining surface **3316** and the threaded cylindrical inner surface **3320**. The threaded cylindrical inner surface **3320** extends longitudinally between the lower annular surface **3318** and the inner circular surface **3322**.

[0118] The sealing-cavity defining surfaces **3312**, **3314**, and **3316** define an annular sealing member receiving cavity sized and shaped to partially receive the sealing member **3800** (as described below). The threaded cylindrical inner surface **3320** and the inner circular surface **3322** define a cartridge-receiving bore sized and shaped to receive and threadably engage part of the cartridge **3200** (as described below).

[0119] In this embodiment, the nut **3300** is made of brass, such as UNS C36000, though it may be made of any suitable material.

[0120] As best shown in FIG. **14**, the plunger **3400** includes a stem **3410** and a head **3420** at one end of the stem **3410**. The other end **3412** of the stem **3410** is free. A cylindrical surface **3414***a* and a circular surface **3414***b* define a biasing member-receiving bore that extends longitudinally inward from the free end **3412**. The biasing member-receiving bore is sized and shaped to receive part of the biasing member **3900**. A first length L**1** of the stem **3410** extending from the free end **3412** toward the head **3420** has a first outer diameter Dia**1**, which is 8 millimeters in this embodiment but may be any suitable value. A second length L**2** of the stem **3410** extending from the head **3420** toward the free end **3412** has a second outer diameter Dia**2** that is smaller than Dia**1**. In this embodiment, Dia**2** is 7.6 millimeters but may be any suitable value. The head **3420** includes a circular seat-disc-holder contact surface **3422** and an annular retainer-contact surface **3424**.

[0121] In this embodiment, the plunger **3400** is made of a ferromagnetic material, such as UNS S430000.

[0122] As best shown in FIG. **15**, the seat disc holder **3500** includes an outer surface **3502** having a cylindrical cartridge engaging portion and a tapered lower portion, a first outer annular surface **3504**, a first cylindrical retainer engaging surface **3506**, an annular retainer seating surface **3508**, a second cylindrical retainer engaging surface **3510**, an annular plunger contact surface **3512**, a cylindrical inner surface **3514**, an annular seat disc engaging surface **3516**, a cylindrical seat disc engaging surface **3518**, and a second annular outer surface **3520**.

[0123] The outer surface **3502** extends longitudinally between the first outer annular surface **3504** and the second annular outer surface **3520**. The first outer annular surface **3504** extends transversely between the outer surface **3502** and the first cylindrical retainer engaging surface **3506**. The first cylindrical retainer engaging surface **3506** extends longitudinally between the first outer annular surface **3504** and the annular retainer seating surface **3508**. The annular retainer seating surface **3508** extends transversely between the first cylindrical retainer engaging surface **3506** and the second cylindrical retainer engaging surface **3510**. The second cylindrical retainer engaging surface **3510** extends longitudinally between the annular retainer seating surface

3508 and the annular plunger contact surface **3512**. The annular plunger contact surface **3512** extends transversely between the second cylindrical retainer engaging surface **3510** and the cylindrical inner surface **3514**. The cylindrical inner surface **3514** extends longitudinally between the annular plunger contact surface **3512** and the annular seat disc engaging surface **3516**. The annular seat disc engaging surface **3516** extends transversely between the cylindrical inner surface **3514** and the cylindrical seat disc engaging surface **3518**. The cylindrical seat disc engaging surface **3518** extends longitudinally between the annular seat disc engaging surface **3516** and the second annular outer surface **3520**. The second annular outer surface **3520** extends transversely between the cylindrical seat disc engaging surface **3518** and the outer surface **3502**.

[0124] The first cylindrical retainer engaging surface **3506**, the annular retainer seating surface **3508**, the second cylindrical retainer engaging surface **3510**, and the annular plunger contact surface **3512** form a retainer and plunger receiving cavity sized and shaped to receive the retainer **3600** and the head and part of the stem of the plunder **3400**. The annular seat disc engaging surface **3516**, the cylindrical seat disc engaging surface **3518**, and the second annular outer surface **3520** define a seat-disc-receiving bore sized and shaped to receive the seat disc **3700**.

[0125] In this embodiment, the seat disc holder **3500** is made of stainless steel, such as AISI 304, though in other embodiments it may be made of any suitable material.

[0126] As best shown in FIG. **16**, the retainer **3600** includes a first annular portion **3610** and a second annular portion **3630**. The outer diameter of the first annular portion is less than the outer diameter of the second annular portion such that part of the second annular portion **3630** forms an annular shoulder **3620**. A cylindrical surface **3640** defines a plunger receiving bore sized and shaped to receive part of the stem of the plunger **3400**.

[0127] In this embodiment, the retainer **3600** is made of a ferromagnetic material, such as UNS S430000.

[0128] As best shown in FIG. **17**, the seat disc **3700** includes a first cylindrical portion **3710** connected to a second cylindrical portion **3720**. The diameter of the first cylindrical portion **3710** is greater than the diameter of the second cylindrical portion **3720**.

[0129] In this embodiment, the seat disc **3700** is made of an elastomeric material, such as polychlorotrifluoroethylene (PCTFE), or any other suitable material.

[0130] FIGS. **10** and **18**A-**18**D show a solenoid valve assembly including the solenoid valve **3000** assembled and threadably attached to the valve body **4000**. More specifically, the solenoid valve **3000** is threadably attached to the valve body **4000** via the valve-body-engaging threads **3222***a* of the cartridge **3200**. A valve body sealing member **5000**, such as an O-ring, is compressed between the valve body **4000** and the annular valve body sealing surface **3220** of the cartridge **3200** to prevent fluid leakage through this interface between the valve body **4000** and the cartridge **3200**. The coil assembly **3100** is mounted to the cartridge **3200**. Specifically, part of the

[0131] cartridge **3200** is received in the cartridge-receiving bore defined by the coil housing **3100***a*. The threaded cylindrical inner surface **3320** of the nut **3300** is threadably engaged to the nut-engaging threads **3202***a* of the cartridge **3200** to compress the sealing member **3800** against the first upper surface **3106** of the coil housing **3100***a*. The nut **3300** compresses the coil housing **3100***a* against the first and second outer annular surfaces **3208** and **3212** of the cartridge **3200** to retain the coil assembly **3100** in place relative to the cartridge **3200**.

[0132] Part of the stem **3410** of the plunger **3400** is slidably received in the plunger-receiving bore defined by the cartridge **3200**. The biasing member **3900**—here a compression spring—is partly disposed in the biasing member-receiving bore defined by the plunger **3400** such that the biasing member **3900** extends between the circular surface **3414***b* of the plunger **3400** and the circular plunger stem engaging surface **3236** of the cartridge **3200**.

[0133] The seat disc holder **3500** is slidably received in the plunger, retainer, and seat disc holder receiving cavity defined by the cartridge **3200** such that the head **3420** and part of the stem **3410** of the plunger **3400** is received in the retainer and plunger receiving cavity defined by the seat disc holder **3500**.

[0134] The retainer **3600** is received in the retainer and plunger receiving cavity defined by the seat disc holder **3500** such that the stem **3410** of the plunger **3400** extends through the plunger receiving bore defined by the retainer **3600** and the annular shoulder **3620** contacts the annular retainer seating surface **3508** of the seat disc holder **3500**. The retainer **3600** is held in place via an interference fit between the second annular portion **3630** of the retainer **3600** and the first cylindrical retainer engaging surface **3506** of the seat disc holder and an interference fit between the first annular portion **3610** of the retainer **3600** and the second cylindrical retainer engaging surface **3510** of the seat disc holder **3500**. In other embodiments, the retainer is held in place by crimping the upper end of the seat disc holder.

[0135] The seat disc **3700** is received in the seat disc receiving bore defined by the seat disc holder **3500**. The seat disc **3700** is held in place via an interference fit between the perimeter of the first cylindrical portion **3710** of the seat disc **3700** and the cylindrical seat disc engaging surface **3518** of the seat disc holder **3500**. In other embodiments, the seat disc is held in place by crimping the lower end of the seat disc holder.

[0136] As best shown in FIGS. **18**A-**18**D and described below, the solenoid valve **3000** is movable from a closed configuration (FIGS. **10** and **18**A) to a first intermediate configuration (FIG. **18**B), from the first intermediate configuration to a second intermediate configuration (FIG. **18**C), and from the second intermediate configuration to an open configuration (FIG. **18**D). More specifically, the solenoid valve **3000** is biased to its closed configuration (i.e., is a normally closed valve) and configured to, when its coil is energized, move to its open configuration via a two-step process (i.e., through the first and second intermediate configurations). When in the closed configuration, the solenoid valve **3000** prevents fluid from flowing from an inlet of the valve body **4000** (defined by surface **4100**) to an outlet of the valve body **4000** (defined by surface **4200**).

[0137] FIG. **18**A shows the solenoid valve **3000** in the closed configuration. In the closed configuration, the biasing member **3900** biases the plunger **3400** away from the coil assembly **3100**. The circular seat-disc-holder contact surface **3422** of the head **3420** of the plunger **3400** contacts the annular plunger contact surface **3512** of the seat disc holder **3500** and pushes the seat disc holder **3500** away from the coil assembly **3100**. This causes the second cylindrical portion **3720** of the seat disc **3700** to sealingly engage the

valve seat **4300** of the valve body **4000**, which prevents fluid from flowing from the inlet of the valve body **4000** to the outlet of the valve body **4000**. So when the solenoid valve **3000** is in the closed configuration, the plunger **3400** is in a first plunger position, the seat disc holder **3500** is in a first seat disc holder position, the retainer **3600** is in a first retainer position, and the seat disc **3700** is in a first seat disc position. Additionally, fluid introduced at the inlet of the valve body **4000** fills certain gaps within the solenoid valve **3000** and pressurizes the solenoid valve **3000** to the closed configuration.

[0138] When the solenoid valve **3000** is in the closed configuration, the annular retainer-contact surface **3424** is a distance D**1**, which is 3.5 millimeters in this embodiment but may be any suitable value, from the underside of the first annular portion **3610** of the retainer **3600**. Additionally, the upper surface of the second annular portion **3630** of the retainer **3600** is a distance D**2**, which is 2.9 millimeters in this embodiment but may be any suitable value, from the annular retainer engaging surface **3232** of the cartridge **3200**. Further, the end **3412** of the stem **3410** of the plunger **3400** is a distance D**3**, which is 4.0 millimeters in this embodiment but may be any suitable value, from the circular plunger stem engaging surface **3236** of the cartridge **3200**.

[0139] When the coil is energized, the coil generates an electromagnetic force that draws the ferromagnetic plunger **3400** toward the coil assembly **3100** and against the biasing force of the biasing member **3900** until the solenoid valve **3000** reaches a first intermediate configuration shown in FIG. **18**B. Specifically, the plunger **3400** has moved relative to the coil assembly **3100**, the cartridge **3200**, the nut **3300**, the seat disc holder **3500**, the retainer **3600**, the seat disc **3700**, and the valve body **4000** such that: (1) the annular retainer-contact surface **3424** contacts the underside of the first annular portion **3610** of the retainer **3600**; and (2) the end **3412** of the stem **3410** of the plunger **3400** is a distance D**4**, which is 0.5 millimeters (based on D**1** and D**3**), from the circular plunger stem engaging surface **3236** of the cartridge **3200**. So when the solenoid valve **3000** is in the first intermediate configuration, the plunger **3400** is in a second plunger position (different from the first plunger position), the seat disc holder **3500** is in the first seat disc holder position, the retainer **3600** is in the first retainer position, and the seat disc **3700** is in the first seat disc position.

[0140] After the solenoid valve **3000** reaches the first intermediate configuration (i.e., after the plunger **3400** moves to the position described above), the magnetic force acting on the plunger **3400** increases (because it's closer to the coil) and causes further movement of the plunger **3400** and movement of the seat disc holder **3500** until the solenoid valve **3000** reaches a second intermediate configuration shown in FIG. **18**C. Specifically, the plunger **3400** has moved relative to the coil assembly **3100**, the cartridge **3200**, the nut **3300**, and the valve body **4000** such that the end **3412** of the stem **3410** of the plunger **3400** contacts the circular plunger stem engaging surface **3236** of the cartridge **3200**. In doing so, the plunger **3400** pulls the retainer **3600** and seat disc holder **3500** and seat disc **3700** attached with it such that: (1) the upper surface of the second annular portion **3630** of the retainer **3600** is a distance D**5**, which is 2.4 millimeters in this embodiment (based on D**2** and D**3**), from the annular retainer engaging surface **3232** of the cartridge **3200**; and (2) the seat disc **3700** disengages the valve seat **4300**. So when the solenoid valve **3000** is in the second intermediate configuration, the plunger **3400** is in a third plunger position (different from the first and second plunger positions), the seat disc holder **3500** is in a second seat disc holder position (different from the first seat disc holder position), the retainer **3600** is in a second retainer position (different from the first retainer position), and the seat disc **3700** is in a second seat disc position (different from the first seat disc position).

[0141] Once the seat disc **3700** disengages the valve seat **4300**, the fluid at the inlet of the valve body **4000** stops pressurizing the solenoid valve to the closed configuration (or otherwise reduces the amount of pressurization) and begins flowing from the inlet of the valve body **4000** to the outlet of the valve body **4000**. This combined with the movement of the retainer **3600** toward the coil assembly **3100** causes the electromagnetic force to draw the ferromagnetic retainer **3600** toward the coil assembly **3100** until the solenoid valve reaches the open configuration shown in FIG. **18**D. Specifically, the retainer **3600** has moved relative to the coil assembly **3100**, the cartridge **3200**, the nut **3300**, the plunger **3400**, and the valve body **4000** such that the upper surface of the second annular portion **3630** of the retainer **3600** contacts the annular retainer engaging surface **3232** of the cartridge **3200**. In doing so, the retainer **3600** pulls the seat disc holder **3500** and the seat disc **3700** attached with it to further separate the seat disc **3700** from the valve seat **4300**. So when the solenoid valve **3000** is in the closed configuration, the plunger **3400** is in the third plunger position, the seat disc holder **3500** is in a third seat disc holder position (different from the first and second seat disc holder positions), the retainer **3600** is in a third retainer position (different from the first and second retainer positions), and the seat disc **3700** is in a third seat disc position (different from the first and second seat disc positions).

[0142] Based on the distances D**1**, D**2**, and D**3**, in this example embodiment the maximum stroke of the solenoid valve is 2.9 millimeters, though this may vary in other embodiments by changing the size and/or positioning of certain components.

[0143] The fact that the solenoid valve is a direct-drive solenoid valve renders it simpler in construction and quicker to open than a pilot-driven solenoid valve. Further, the configuration that enables three-step opening enables the use of a small solenoid coil that consumes a low amount of energy as compared to prior art direct-drive solenoid valves.

[0144] FIG. **19** illustrates another embodiment of the pressure relief and vent module **100***b*. The pressure relief and vent module **100***b* includes a pressure relief and vent module housing **110***b* that defines: (1) a first pressure relief device port **130***b;* (2) a second pressure relief device port **140***b;* (3) a pressure gauge port **150***b;* (4) a cylinder inlet port **160***b;* (5) a pressure build inlet port **170***b;* and (6) a third pressure relief device port **180***b*. A suitable vent valve **120***b* is integrated into the pressure relief and vent module housing **110***b*.

[0145] In the illustrated example of FIG. **19**, a fluid inlet tube **161***b* is connected to and in fluid communication with the cylinder inlet port **160***b* and extends from the pressure relief and vent module housing **110***b*. An example pressure relief valve **181***b* is connected to and in fluid communication with the third pressure relief port **180***b*, as shown in the example of FIG. **19**. Additionally, in the example of FIG. **19**, an example pressure gauge **151***b* is connected to and in fluid communication with the pressure gauge port **150***b*. It should

be understood that various other fluid control devices (e.g., valves, plugs, gauges, tubes, relief devices, etc.) may be connected to any of the ports **130***b*-**180***b* depending on a given fluid control application (e.g., conveying liquid natural gas, storing liquid nitrogen, storing compressed carbon dioxide, etc.). This pressure relief and vent module **100***b* may be used with any suitable cryogenic cylinder including a pressure-build circuit.

[0146] The first, second, and third pressure relief ports **130***b*, **140***b*, **180***b*, the pressure gauge port **150***b*, the cylinder inlet port **160***b*, and the vent valve **120***b* are in fluid communication with one another. The pressure build inlet port **170***b* is in fluid communication with the vent valve **120***b*. Thus, the pressure build inlet port **170***b* is in selective fluid communication with the first, second, and third pressure relief ports **130***b*, **140***b*, **180***b*, the pressure gauge port **150***b*, and the cylinder inlet port **160***b* via the vent valve **120***b*.

[0147] In a first example (e.g., for liquid natural gas (LNG) applications), a first pressure relief device (such as a pressure relief valve) may be threadably attached to the first pressure relief port **130***b* to fluidly connect the first pressure relief device with the interior of the pressure relief and vent module housing **110***b*. A second pressure relief device (such as a burst disc) may be threadably attached to the second pressure relief port **140***b* to fluidly connect the second pressure relief device with the interior of the pressure relief and vent module housing **110***b*. Further, the example pressure gauge **151***b* may be threadably attached to the pressure gauge port **150***b* to fluidly connect the pressure gauge **151***b* with the interior of the pressure relief and vent module housing **110***b*. Additionally, the pressure build inlet port **170***b* may be usable to fluidly connect the interior of the pressure relief and vent module housing **110***b* with a pressure-build circuit. Also, the cylinder inlet port **160***b* may be fluidly connected to a gas-housing portion of the interior of the cryogenic cylinder via the fluid inlet tube **161***b*.

[0148] In operation, in the first example, when the pressure-build circuit is deactivated and the vent valve **120***b* is closed, the fluid inlet tube **161***b* receives pressurized gas from the gas-housing portion of the interior of the cryogenic cylinder, and the pressure relief and vent module housing **110***b* routes the gas to the ports described above. Opening the vent valve **120***b* will enable the gas to enter the pressure build inlet port **170***b*, but a check valve (not shown) will prevent the gas from entering the pressure-build circuit. When the pressure-build circuit is activated, gas enters the pressure build inlet port **170***b* and travels through the fluid inlet tube **161***b* into the gas-housing portion of the cryogenic cylinder to increase the pressure of the gas housed there.

[0149] In a second example (e.g., in a standard fluid control application, a liquid nitrogen application, etc.), a pressure building circuit may be attached to the third pressure relief port **180***b* to fluidly connect the pressure building circuit with the interior of the pressure relief and vent module housing **110***b*. Thus, the third pressure relief port **180***b* serves as a pressure build inlet. Further, the first and second pressure relief ports **130***b*, **140***b*, the pressure gauge port **150***b*, and the cylinder inlet port **160***b* may be respectively fluidly connected to: first and second pressure relief devices, the pressure gauge **151***b*, and the gas-housing portion of the interior of the cryogenic cylinder. Additionally, the pressure build inlet port **170***b* may be fluidly connected to the atmosphere. Thus, the vent valve **120***b* may vent fluid from any of the ports **130***b*, **140***b*, **150***b*, **160***b*, **180***b* to the atmosphere via the pressure build inlet port **170***b*.

[0150] In operation, in the second example, when the pressure-build circuit is deactivated and the vent valve **120***b* is closed, the fluid inlet tube **161***b* receives pressurized gas from the gas-housing portion of the interior of the cryogenic cylinder, and the pressure relief and vent module housing **110***b* routes the gas to the ports described above. The gas will enter the third pressure relief port **180***b*, but a check valve (not shown) will prevent it from entering the pressure-build circuit. Opening the vent valve **120***b* will vent gas to the atmosphere via the pressure build inlet port **170***b*. When the pressure-build circuit is activated by a valve not shown, gas enters the third pressure relief port **180***b* and travels through the fluid inlet tube **161***b* into the gas-housing portion of the cryogenic cylinder to increase the pressure of the gas housed there.

[0151] In either of these first or second examples, the first and second pressure relief devices and the pressure gauge **151***b* operate independently of whether the pressure build circuit is activated and of whether the vent valve **120***b* is open. Thus, gas will escape through the first pressure relief device if its pressure is higher than the first pressure relief device's opening threshold. Similarly, the gas will escape through the second pressure relief device if its pressure is higher than the second pressure relief device's opening threshold. It should be understood that, in some instances, pressure in the pressure relief and vent module housing **110***b* may exceed the first and/or second pressure relief device's opening threshold despite the vent valve **120***b* being open or partially open. The pressure gauge **151***b* will display the pressure of the gas in pressure relief and vent module housing **110***b* on its side of the vent valve **120***b*.

[0152] It should be understood that the pressure relief and vent module **100***b* may be used in additional fluid control applications and/or configurations in addition and/or alternative to the examples described above.

[0153] FIGS. **20** and **21** are perspective views of a second embodiment of the solenoid valve assembly **6000** of the present disclosure. FIG. **22**A is a cross-sectional view of the solenoid valve assembly **6000** in a closed configuration. FIG. **22**B is a cross-sectional view of the solenoid valve assembly **6000** in an intermediate configuration. FIG. **22**C is a cross-sectional view of the solenoid valve assembly **6000** in a partially open configuration. FIG. **22**D is a cross-sectional view of the solenoid valve assembly **6000** in a fully open configuration.

[0154] As shown in FIGS. **20**-**22**D, the solenoid valve assembly **6000** includes a valve body **7000**, a gasket **8000**, the coil **3100**, a cartridge **6200**, a pin **6250**, a nut **6300**, a plunger **6400**, a retainer **6450**, a poppet **6500**, a plate **6600**, a seat disc **6700**, the sealing member **3800**, the first biasing member **3900**, and a second biasing member **6950**. The coil **3100**, the sealing member **3800**, and the first biasing member **3900** are described above in conjunction with FIGS. **10**, **11**, and **18**A-D.

[0155] The valve body **7000** includes a flow portion **7110** and a mounting portion **7120** transverse to the flow portion **7110**. The flow portion **7110** includes multiple surfaces (not labeled) that together define a flow passage between an inlet **7110***a* and an outlet **7110***b*. As shown in FIG. **22**D, a valve seat **7112** is positioned within the flow passage between the inlet **7110***a* and the outlet **7110***b*. The mounting portion **7120**

includes a first cylindrical region **7121**, a second cylindrical region **7122**, a threaded region **7123**, and a step **7124**.

[0156] The first cylindrical region **7121** has a greater inner diameter than the second cylindrical region **7122**. Thus, the first and second cylindrical regions **7121**, **7122** define the step **7124** where the first and second cylindrical regions **7121**, **7122** meet one another.

[0157] The threaded region **7123** is internally threaded to threadably receive the cartridge **6200**.

[0158] In this embodiment, the valve body **7000** is made of brass, such as UNS C37700, though it may be made of any suitable material.

[0159] The gasket **8000** is ring shaped and is disposed in the valve body **7000**. More specifically, the gasket **8000** abuts the step **7124** and contacts the first cylindrical region **7121**. During assembly of the solenoid valve **6000**, the gasket **8000** slides along the first cylindrical region **7121** before stopping against the step **7124**. When the cartridge **6200** is tightened in the valve body **7000**, the gasket **8000** is at least partially deformed (e.g., crushed, etc.) to form a seal between the valve body **7000** and the cartridge **6200**. In this embodiment, the gasket **8000** is metallic (e.g., copper, zinc, etc.), though it may be made of any suitable material.

[0160] The coil **3100** is described above in conjunction with FIGS. **10** and **11**. Additionally, as shown in FIGS. **20** and **21**, the coil **3100** includes an electrical connector **3150**. The coil **3100** is electrically connected to a power supply via the electrical connector **3150**.

[0161] The cartridge **6200** includes a body **6210**, a first annular extension **6220**, a flange **6230**, a second annular extension **6240**, and a third annular extension **6260**.

[0162] The body **6210** is partially disposed in coil **3100** and includes an externally threaded end **6212** and an inner surface **6214**. The threaded end **6212** threadably engages the nut **6300**. It should be appreciated that the coil **3100** is slidably removable from the cartridge **6200**. As shown in FIGS. **22**A-D, an axial distance from the inner surface **6214** to the plunger **6400** is referred to as d**13**.

[0163] The first annular extension **6220** extends axially away from the body **6210** opposite the threaded end **6212**. The first annular extension **6220** includes a thin wall region **6222**. The first annular extension **6220** defines an annular recess **6224** along the thin wall region **6222**. It should be appreciated that magnetic attraction of the plunger **6400** is reduced along the thin wall region **6222**. Thus, friction between the plunger **6400** and the cartridge **6200** is reduced and magnetic attraction of the plunger **6400** toward the body **6210** is enhanced. Further, the thin wall region **6222** separates magnetic field in the cartridge **6200** into two parts that respectively pull and push the plunger **6400** to open and close the valve assembly **6000**. The first annular extension **6220** and the inner surface **6214** define a cylindrical void **6291**.

[0164] The flange **6230** extends radially outwardly from the first annular extension **6220**. The coil **3100** abuts the flange **6230**. During assembly of the solenoid valve **6000**, the coil **3100** slides along the body **6210** and the first annular extension **6220** before stopping against the flange **6230**. When the nut **6300** is threaded onto the threaded end **6212**, the coil **3100** is captured on the cartridge **6200** between the flange **6230** and the nut **6300**. As shown in FIGS. **22**A-D, an axial distance from the plate **6600** to the flange **6230** is referred to as d**12**.

[0165] The second annular extension **6240** extends axially away from the flange **6230**. As shown in FIGS. **20** and **21**, the flange **6230** and the second annular extension **6240** have a non-circular outer perimeter (e.g., ovate, square, hexagonal, polygonal, etc.) to permit application of torque to the flange **6230** and the second annular extension **6240** with a corresponding tool.

[0166] The third annular extension **6260** extends axially away from the second annular extension **6240**. The second annular extension **6240** has a greater outer perimeter than the third annular extension **6260**. Thus, the second and third annular extensions **6240**, **6260** define a step **6244**. The third annular extension **6260** is cylindrical and partially externally threaded to have an externally threaded region **6262** and a smooth region **6264**. The externally threaded region **6262** is between the step **6244** and the smooth region **6264**. When the solenoid valve **6000** is assembled, the third annular extension **6260** is received by the mounting portion **7120** of the valve body **7000**. More specifically, the smooth region **6264** is inserted into the first cylindrical region **7121** and the externally threaded region **6262** is threaded into the threaded region **7123**. As the cartridge **6200** is tightened into the valve body **7000** via the flange **6230** and/or the first annular extension **6240**, the third annular extension **6260** crushes the gasket **8000** against the step **7124**. The first and second annular extensions **6240**, **6260** have the same inner diameter. The first annular extension **6240**, the second annular extension, and the flange **6230** define a cylindrical void **6292**. The cylindrical voids **6291**, **6292** communicate with one another and with the inlet **7110***a*.

[0167] The plunger **6400** is rotatably and slidably disposed in the cartridge **6200** in the cylindrical voids **6291**, **6292**. The plunger **6400** includes a cylindrical first body section **6410**, a partially conical taper section **6412**, and a cylindrical second body section **6420**. The first body section **6410** has a greater outer diameter than the second body section **6420**. The first body section **6410** transitions into the second body section **6420** via the taper section **6412**. The first and second body sections **6410**, **6420**, and the taper section **6412** define a passage **6440** through the plunger **6400**. The passage **6440** is in communication with the void **6291**. The first body section **6410** has an internal step **6414**. The second body section **6420** is internally threaded. In some examples, the internal threading of the second body section **6420** extends partially into the taper section **6412**.

[0168] The retainer **6450** is disposed in the cartridge **6200** and is engaged with the plunger **6400**. It should be understood that the retainer **6450** may also be referred to as a spring support screw. In the examples of FIGS. **22**A-D, the plunger **6400** and the retainer **6450** are threadably engaged. It should be understood that the retainer **6450** and the plunger **6400** may be engaged to one another in any manner (e.g., press fit, crimped, glued, welded, riveted, etc.). The retainer **6450** includes a body **6460**, a flange **6470**, and an annular extension **6480**. The flange **6470** extends radially away from the body **6460** to define a step **6472**. The annular extension **6480** extends axially away from the body **6460** opposite the flange **6470**. The body **6460** and the annular extension **6480** define a passage **6490** through the retainer **6450**. In the examples of FIGS. **22**A-D, the annular extension **6480** is externally threaded. When the solenoid valve **6000** is assembled, the externally threaded annular extension **6480** is threaded into the internally threaded second body

section **6420** of the plunger **6400**. Thus, the passage **6490** communicates with the passage **6440**.

[0169] The pin **6250** is rotatably and slidably disposed in the plunger **6400** in the passage **6440**. The pin **6250** includes a pin flange **6252** configured to abut the step **6414**. Thus, when the retainer **6450** is screwed into the plunger **6400**, the pin **6250** is slidably captured in the plunger **6400** between the step **6414** and the retainer **6450**.

[0170] The first biasing member **3900** is disposed in the plunger **6400** in the passage **6440** between the pin **6250** and the retainer **6450**. The pin **6250** is partially disposed in the first biasing member **3900** until the pin flange **6252** abuts the first biasing member **3900**. Thus, the first biasing member **3900** is captured between the retainer **6450** and the pin **6250** to urge the pin **6250** away from the retainer **6450**. In other words, the first biasing member **3900** pushes the pin **6250** to extend the pin **6250** out of the plunger **6400** until the pin flange **6252** contacts the step **6414**. Thus, the pin **6250** is spring-loaded in the plunger **6400** to contact the inner surface **6214** of the cartridge.

[0171] The plate **6600** is disposed in the cartridge **6200** and rotatably and slidably disposed about the plunger **6400** along the second body section **6420**. The plate **6600** includes a body **6610** and a flange **6620**. The flange **6620** extends radially away from the body **6610** to define a step **6612**. When the solenoid valve **6000** is assembled, the plate **6600** is captured between the body **6460** of the retainer **6450** and the taper section **6412** of the plunger **6400**. As shown in FIGS. **22**A-D, an axial distance from the body **6460** to the body **6610** is referred to as d**11**.

[0172] The second biasing member **6950** is disposed about the body **6460** of the retainer **6450** to abut the flange **6470** at the step **6472**. In the examples of FIGS. **22**A-D, the second biasing member **6950** is a compression spring. The second biasing member **6950** is disposed about the body **6610** of the plate **6600** to abut the flange **6620** at the step **6612**. Thus, the second biasing member **6950** is captured between the plate **6600** and the retainer **6450** to urge plate **6660** away from the retainer **6450** and toward the taper section **6412**. Thus, the second body section **6420** of the plunger **6400** is partially disposed in the second biasing member **6950**.

[0173] The poppet **6500** is rotatably and slidably disposed in the cartridge **6200** and in the valve body **7000**. The poppet **6500** includes a body **6510**, an inner surface **6512**, an annular extension **6520**, a guide flange **6530**, an upper retaining flange **6542**, and a lower retaining flange **6544**. In this embodiment, the poppet **6500** is made of metallic material (e.g., brass, stainless steel, etc.), though it may be made of any suitable material. It should be understood that the poppet **6500** may also be referred to as a seat disc holder.

[0174] The upper and lower retaining flanges **6542**, **6544** extend radially away from the body **6510**. The lower retaining flange **6544** is configured to fit inside, but not contact, the valve seat **7112**. The upper retaining flange **6542** has a greater outer diameter than the lower retaining flange **6544**.

[0175] The annular extension **6520** extends axially away from the body **6510** opposite the upper and lower retaining flanges **6542**, **6544**. The poppet **6500** slides in the cartridge **6200** along the annular extension **6520**. The annular extension **6520** has an internal step **6522**. The annular extension **6520** and the body **6510** define a void **6590**. The plate **6600** is disposed in and engaged with the annular extension **6520** to abut the internal step **6522**. In some examples, the annular extension **6520** is crimped over the flange **6620** of the plate **6600** to capture the flange **6620** against the internal step **6522**. In some examples, the plate **6600** is pressed into the poppet **6500** until the flange **6620** contacts the internal step **6522** to form an interference fit between the flange **6620** and the annular extension **6520**. Thus, the second biasing member **6950** is disposed in the poppet **6500**. Further, the spring supporting screw **6450** is partially disposed in the poppet **6500**. It should be appreciated that the plate **6600** and the poppet **6500** move as a unit relative to the plunger **6400** and the retainer **6450**. As the poppet **6500** moves away from the plunger **6400**, the second biasing member **6950** is compressed in the void **6590** and vice versa. The void **6590** is in communication with the passage **6490**. It should be appreciated that because the voids **6291**, **6292**, **6590**, the passages **6440**, **6490**, and the inlet **7110***a* are in communication with one another, formation of a vacuum between the retainer **6450** and the poppet **6500** is substantially prevented.

[0176] The guide flange **6530** extends radially away from the body **6510** between the upper retaining flange **6542** and the annular extension **6520**. In some examples, the outer diameter of the guide flange **6530** is approximately equal to the outer diameter of the annular extension **6520**. The poppet **6500** slides along the second cylindrical region **7122** via the guide flange **6530**. In other words, the guide flange **6530** rotatably and slidably contacts the second cylindrical region **7122** to restrain lateral movement of the poppet **6500** relative to valve body **7000**, to the plunger **6400**, and to the cartridge **6200**. Further, the guide flange **6530** provides radial clearance between the poppet **6500** and the gasket **8000**. Thus, the poppet **6500** does not contact the gasket **8000** as the poppet **6500** axially slides in the valve body **7000** and the cartridge **6200**.

[0177] The seat disc **6700** is disposed about the poppet **6500** between the upper and lower retaining flanges **6542**, **6544**. The upper and lower retaining flanges **6542**, **6544** retain the seat disc **6700** on the poppet **6500**. In some examples, the seat disc **6700** is partially conical. The seat disc **6700** is composed of an elastomeric polymer material (e.g., rubber, plastic, etc.). Thus, the seat disc **6700** is configured to sealingly seat on the valve seat **7112** and to pad contact between the valve body **7000** and the poppet **6500**. As shown in FIGS. **22**A-D, a distance from the seat disc **6700** to the valve seat **7112** is referred to as d**14**.

[0178] It should be understood and appreciated that the plunger **6400**, the retainer **6450**, the plate **6600**, the pin **6250**, the first biasing member **3900**, the second biasing member **6950**, the seat disc **6700**, and the poppet **6500** are slidably removable from the cartridge **6200** as a unit.

[0179] The nut **6300** has a top surface **6302**, a bottom surface **6304**. The nut **6300** has a non-circular outer perimeter to permit application of torque to the nut with a corresponding tool, as shown in FIGS. **20** and **21**. The nut **6300** defines an annular pocket **6314** and is internally threaded to define a void **6390**. The sealing member **3800** is a ring shaped elastomer (e.g., an O-ring, etc.) and is partially disposed in the annular pocket **6314** to extend slightly beyond (e.g., stand proud of) the bottom surface **6304**. The nut **6300** receives and threadably engages with the threaded end **6212** of the cartridge **6200**. As the nut **6300** is tightened on the cartridge **6200**, the sealing member **3800** is compressed between the nut **6300** and the coil **3100** until the bottom surface **6304** contacts the coil **3100**. Thus, the

sealing member **3800** prevents water, dust, and debris ingress between the coil **3100** and the cartridge **6200**.

[0180] It should be appreciated that because of the non-circular outer perimeters of the nut **6300**, the flange **6320**, and the first annular extension **6240**, opposing torques may be applied to the nut **6300**, the cartridge **6200**, and/or to the valve body **7000**. Thus, the nut **6300** may be removed from the cartridge **6200** without unscrewing the cartridge **6200** from the valve body **7000**. Thus, the coil **3100** may be removed (e.g., for maintenance, replacement, cleaning, etc.) without breaking the seal between the cartridge **6200** and the valve body **7000** provided by the gasket **8000**. Further, the nut **6300** may be tightened onto the cartridge **6200** without over-tightening the cartridge **6200** into the valve body **7000**. Additionally, the gasket **8000**, the coil **3100**, the cartridge **6200**, the pin **6250**, the nut **6300**, the plunger **6400**, the retainer **6450**, the poppet **6500**, the plate **6600**, the seat disc **6700**, the sealing member **3800**, the first biasing member **3900**, and the second biasing member **6950** are removable as a unit from the valve body **7000**.

[0181] In operation, as shown in FIG. **22**A, when the valve assembly **6000** is in a fully closed position, the seat disc **6700** is seated in the valve seat **7112** and the retainer **6450** axially contacts the inner surface **6512** of the poppet **6500**. It should be appreciated, that when the valve assembly **6000** is in the fully closed position, the distance d**14** is zero. When the valve assembly **6000** is in the fully closed position, friction between the seat disc **6700** and the valve seat **7112** and fluid pressure exerted on the poppet **6500** keep the seat disc **6700** seated in the valve seat **7112**. Further, in some examples, the coil **3100** is energized to push the poppet **6500** toward the valve body **7000** via the plunger **6400** and the retainer to maintain a tight seal between the seat disc **6700** and the valve seat **7112**.

[0182] In operation, as shown in FIG. **22**B, when the coil **3100** is initially energized in a closing direction to open the valve assembly **6000**, the plunger **6400** and the retainer **6450** are drawn into the cartridge **6200** until the body **6460** contacts the body **6610**. In other words, when the seat disc **6700** is seated in the valve seat **7112**, and the retainer **6450** contacts the plate **6600** to compress the biasing member **6950**, the valve assembly **6000** is in an intermediate position, as shown in FIG. **22**B. Thus, the distance d**11** is closed, the distance d**12** is substantially unchanged, the distance d**13** is reduced, and the distance d**14** remains closed, as shown in FIGS. **22**A and B. In the examples of FIGS. **22**A and B, the distance d**11** is reduced from approximately 4.5 mm to zero. In the examples of FIGS. **22**A and B, the distance d**13** is reduced from approximately 5 mm to approximately 0.5 mm. Thus, the electromagnetic force exerted by coil **3100** on the plunger **6400** overcomes the spring forces of the first and second biasing members **3900**, **6950** to move the valve assembly **6000** from the closed position shown in FIG. **22**A to the intermediate position shown in FIG. **22**B. In other words, in the intermediate position shown in FIG. **22**B, the first and second biasing members **3900**, **6950** are compressed, but the seat disc **6700** is not unseated (e.g., dislodged) from the valve seat **7112**.

[0183] Further in operation, as shown in FIG. **22**C, when the coil **3100** is further energized to open the valve assembly **6000**, the plunger **6400**, the retainer **6450**, the plate **6600**, the second biasing member **6950**, and the poppet **6500** are drawn into the cartridge **6200** until the plunger **6400** contacts the inner surface **6214** and the seat disc **6700** is unseated from the valve seat **7112**. In other words, when the retainer **6450** contacts the plate **6600** and the plunger **6400** contacts the inner surface **6214** to dislodge the seat disc **6700** from the valve seat **7112**, the valve assembly **6000** is in a partially open position, as shown in FIG. **22**C. Thus, the distance d**11** remains closed, the distance d**13** is closed, the distance d**12** is reduced, and the distance d**14** increases as shown in FIGS. **22**B and C. In the examples of FIGS. **22**B and C, the distance d**13** is reduced from approximately 0.5 mm to zero. In the examples of FIGS. **22**B and C, the distance d**12** is reduced from approximately 5.2 mm to approximately 4.7 mm. In the examples of FIGS. **22**B and C, the distance d**14** is increased from zero to approximately 0.5 mm. Thus, the electromagnetic force exerted by coil **3100** on the plunger **6400** overcomes friction between the seat disc **6700** and the valve seat **7112** and/or pressure forces exerted on the poppet **6500** to move the valve assembly **6000** from the intermediate position shown in FIG. **22**B to the partially open position shown in FIG. **22**C. In other words, in the partially open position shown in FIG. **22**C, the first and second biasing members **3900**, **6950** are compressed, and the seat disc **6700** is pulled away (e.g., cracked) from the valve seat **7112**. Thus, the seat disc **6700** is unseated from the valve seat **7112**.

[0184] Further in operation, as shown in FIG. **22**D, when the coil **3100** is energized to hold the plunger **6400** against the inner surface **6214**, the second biasing member **6950** extends to urge the plate **6600** further into the cartridge **6200** until the flange **6470** contacts the poppet **6500** to pull the poppet **6500** and the seat disc **6700** further away from the valve seat **7112**. In other words, when the retainer **6450** contacts the poppet **6500** and the plunger **6400** contacts the inner surface **6214** to retract the seat disc **6700** from the valve seat **7112**, the valve assembly **6000** is in a fully open position, as shown in FIG. **22**D. Thus, the distance d**13** is closed, the distance d**12** is reduced, the distance d**11** increases, and the distance d**14** increases as shown in FIGS. **22**C and D. In the examples of FIGS. **22**C and D, the distance d**12** is reduced from approximately 4.7 mm to approximately 0.2 mm. In the examples of FIGS. **22**C and D, the distance d**11** is increased from 0 to approximately 4.5 mm. In the examples of FIGS. **22**C and D, the distance d**14** is increased from approximately 0.5 mm to approximately 1.6 mm. Thus, the spring force exerted by the second biasing member **6950** between the retainer **6450** and the poppet **6500** via the plate **6600** moves the valve assembly **6000** from the partially open position shown in FIG. **22**C to the fully open position shown in FIG. **22**D. In other words, in the fully open position shown in FIG. **22**D, the first biasing member **3900** is compressed, the second biasing member **6950** is expanded, the plunger **6400** contacts the inner surface **6214**, the retainer **6450** contacts the poppet **6500**, and the seat disc **6700** is retracted from the valve seat **7112**. Thus, the valve assembly **6000** is fully opened, as shown in FIG. **22**D.

[0185] Further in operation, as shown in FIGS. **22**A and D, when the coil **3100** is energized in a closing direction to close the valve assembly **6000**, the plunger **6400**, the retainer **6450**, the plate **6600**, the second biasing member **6950**, and the poppet **6500** are pushed out of the cartridge **6200** until the seat disc **6700** is seated against the valve seat **7112**. Thus, the distance d**13** increases, the distance d**12** increases, the distance d**11** is substantially unchanged, and the distance d**14** is closed, as shown in FIGS. **22**A and D. In

the examples of FIGS. **22**A and D, the distance d**12** increases from approximately 0.2 mm to approximately 5.2 mm. In the examples of FIGS. **22**A and D, the distance d**13** is increased from 0 to approximately 5 mm. In the examples of FIGS. **22**A and D, the distance d**14** is decreased from approximately 1.6 mm to zero. Thus, the valve assembly **6000** is fully closed, as shown in FIG. **22**A.

[0186] While specific embodiments of the present disclosure have been described in detail, it will be appreciated by those skilled in the art that various modifications and alternatives to those details could be developed in light of the overall teachings of the disclosure. Accordingly, the particular arrangements disclosed are meant to be illustrative only and not limiting as to the scope of the invention which is to be given the full breadth of the appended claims and any equivalent thereof.

[0187] In various embodiments, a cryogenic cylinder control system for regulating fluid within a cryogenic cylinder comprises a pressure relief and vent module fluidly connectable to a head space above liquid within the cryogenic cylinder, a manual valve module fluidly connectable to the liquid within the cryogenic cylinder and to an external device, a solenoid valve module fluidly connectable to the manual valve module and to the head space within the cryogenic cylinder, a build-up coil fluidly connectable to the manual valve module and to the solenoid valve module, and a controller operatively connected to the solenoid valve module to control fluid flow through the solenoid valve module.

[0188] In one such embodiment, the pressure relief and vent module comprises a pressure relief valve comprising a pressure relief valve inlet and a pressure relief valve outlet. The pressure relief valve is movable between a pressure relief valve closed configuration in which fluid cannot flow from the pressure relief valve inlet to the pressure relief valve outlet and a pressure relief valve open configuration in which fluid can flow from the pressure relief valve inlet to the pressure relief valve outlet. The pressure relief valve is biased to the pressure relief valve closed configuration and configured to move to the pressure relief valve open configuration when a pressure of fluid at the pressure relief valve inlet exceeds a pressure relief valve threshold.

[0189] In another such embodiment, the manual valve module comprises a first valve comprising a first valve inlet and a first valve outlet. The first valve is movable between a first valve open configuration in which fluid can flow from the first valve inlet to the first valve outlet and a first valve closed configuration in which fluid cannot flow from the first valve inlet to the first valve outlet. The first valve inlet is fluidly connectable to the liquid within the cryogenic cylinder and the first valve outlet is fluidly connectable to a build-up coil inlet of the build-up coil.

[0190] In another such embodiment, the solenoid valve module comprises a solenoid valve module valve body defining a solenoid valve module inlet, a solenoid valve module outlet, and a solenoid valve module combination inlet/outlet. A build-up coil outlet of the build-up coil is fluidly connectable to the solenoid valve module inlet and the solenoid valve module combination inlet/outlet is fluidly connectable to the head space within the cryogenic cylinder.

[0191] In another such embodiment, the solenoid valve module further comprises a first solenoid valve supported by the solenoid valve module valve body and movable between a first solenoid valve closed configuration in which the first solenoid valve prevents fluid from flowing from the solenoid valve module inlet to the solenoid valve module combination inlet/outlet and a first solenoid valve open configuration in which the first solenoid valve enables fluid to flow from the solenoid valve module inlet to the solenoid valve module combination inlet/outlet.

[0192] In another such embodiment, the first solenoid valve comprises an electromagnetic coil, is biased to the first solenoid valve closed configuration, and is configured to move from the first solenoid valve closed configuration to the first solenoid valve open configuration when the electromagnetic coil is energized.

[0193] In another such embodiment, the controller is configured to energize the electromagnetic coil of the first solenoid valve when a sensed head space pressure is below a first solenoid valve threshold.

[0194] In another such embodiment, the first valve, the build-up coil, and the first solenoid valve form a pressure-building circuit. When the first valve inlet is in fluid communication with the liquid within the cryogenic cylinder, the first valve outlet is in fluid communication with the first valve inlet, the first valve outlet is in fluid communication with the solenoid valve module inlet, the solenoid valve module combination inlet/outlet is in fluid communication with the head space within the cryogenic cylinder, the first valve is in the first valve open configuration, and the sensed pressure is below the first solenoid valve threshold, liquid flows from the cryogenic cylinder through the first valve to the build-up coil inlet, the build-up coil vaporizes the liquid into gas, the gas flows from the build-up coil outlet to the solenoid valve module inlet, the gas flows from the solenoid valve module inlet to the solenoid valve module combination inlet/outlet, and the gas flows from the solenoid valve module combination inlet/outlet to the head space within the cryogenic cylinder.

[0195] In another such embodiment, the solenoid valve module comprises a solenoid valve module valve body defining a solenoid valve module inlet, a solenoid valve module outlet, and a solenoid valve module combination inlet/outlet. The solenoid valve module combination inlet/outlet is fluidly connectable to the head space within the cryogenic cylinder.

[0196] In another such embodiment, the manual valve module comprises a second valve comprising a second valve inlet and a second valve outlet and is movable between a second valve open configuration in which fluid can flow from the second valve inlet to the second valve outlet and a second valve closed configuration in which fluid cannot flow from the second valve inlet to the second valve outlet. The second valve inlet is fluidly connectable to the solenoid valve module outlet and the second valve outlet is fluidly connectable to an external device.

[0197] In another such embodiment, the solenoid valve module further comprises a second solenoid valve supported by the solenoid valve module valve body and movable between a second solenoid valve closed configuration in which the second solenoid valve prevents fluid from flowing from the solenoid valve module combination inlet/outlet to the solenoid valve module outlet and a second solenoid valve open configuration in which the second solenoid valve enables fluid to flow from the solenoid valve module combination inlet/outlet to the solenoid valve module outlet.

[0198] In another such embodiment, the second solenoid valve comprises an electromagnetic coil, is biased to the

second solenoid valve closed configuration, and is configured to move from the second solenoid valve closed configuration to the second solenoid valve open configuration when the electromagnetic coil is energized.

[0199] In another such embodiment, the controller is configured to energize the electromagnetic coil of the second solenoid valve when a sensed head space pressure is above a second solenoid valve threshold.

[0200] In another such embodiment, the second valve and the second solenoid valve form an economizer circuit. When the solenoid valve module combination inlet/outlet is in fluid communication with the head space within the cryogenic cylinder, the solenoid valve module outlet is in fluid communication with the second valve inlet, the second valve outlet is in fluid communication with the external device, the second valve is in the second valve open configuration, and the sensed pressure is above the second solenoid valve threshold, gas flows from the head space within the cryogenic cylinder to the solenoid valve module combination inlet/outlet, from the solenoid valve module combination inlet/outlet to the solenoid valve module outlet, from the solenoid valve module outlet to the second valve inlet, from the second valve inlet to the second valve outlet, and from the second valve outlet to the external device.

[0201] In another such embodiment, the cryogenic cylinder control system further comprises an excess flow valve in fluid communication with the second valve outlet and configured to route the gas from the second valve outlet to the external device.

[0202] In another such embodiment, the manual valve module further comprises a check valve comprising a check valve inlet fluidly connectable to the liquid within the cryogenic cylinder and a check valve outlet fluidly connectable to the second valve inlet and to the solenoid valve module outlet.

[0203] In another such embodiment, the check valve is configured to prevent gas flowing from the solenoid valve module outlet from flowing from the check valve outlet to the check valve inlet.

[0204] In another such embodiment, when the solenoid valve module combination inlet/outlet is in fluid communication with the head space within the cryogenic cylinder, the solenoid valve module outlet is in fluid communication with the second valve inlet, the second valve outlet is in fluid communication with the external device, the check valve inlet is in fluid communication with the liquid within the cryogenic cylinder, the check valve outlet is in fluid communication with the second valve inlet and to the solenoid valve module outlet, the second valve is in the second valve open configuration, and the sensed pressure is below the second solenoid valve threshold, liquid flows from the cryogenic cylinder to the check valve inlet, from the check valve inlet to the check valve outlet, from the check valve outlet to the second valve inlet, from the second valve inlet to the second valve outlet, and from the second valve outlet to the external device.

[0205] In another such embodiment, the cryogenic cylinder control system further comprises an excess flow valve in fluid communication with the second valve outlet and configured to route the liquid from the second valve outlet to the external device.

[0206] In various embodiments, a pressure relief and vent module for a cryogenic cylinder control system comprises a housing defining a fluid inlet, a pressure relief device supported by the housing and in fluid communication with the fluid inlet, and a valve supported by the housing and in fluid communication with the fluid inlet. The valve is movable between a valve closed configuration in which the valve prevents fluid received at the fluid inlet from flowing through the valve and a valve open configuration in which the valve enables fluid received at the fluid inlet to flow through the valve.

[0207] In one such embodiment, the pressure relief device is movable between a pressure relief valve closed configuration in which fluid received at the fluid inlet cannot flow through the pressure relief device and a pressure relief valve open configuration in which fluid received at the fluid inlet can flow through the pressure relief device.

[0208] In another such embodiment, the pressure relief device comprises a biasing element that biases the pressure relief device to the pressure relief device closed configuration.

[0209] In another such embodiment, the pressure relief device moves from the pressure relief device closed configuration to the pressure relief device open configuration when fluid received at the fluid inlet has a pressure that exceeds a first threshold pressure.

[0210] In another such embodiment, the pressure relief and vent module further comprises a second pressure relief device supported by the housing and in fluid communication with the fluid inlet.

[0211] In another such embodiment, the second pressure relief device comprises a burst disc configured to rupture when fluid received at the fluid inlet has a pressure that exceeds a second threshold pressure.

[0212] In another such embodiment, the pressure relief and vent module further comprises a pressure gauge supported by the housing and in fluid communication with the fluid inlet.

[0213] In another such embodiment, the pressure gauge is configured to display a pressure of fluid received at the fluid inlet.

[0214] In another such embodiment, the housing further defines a pressure build-up circuit inlet that is fluidly connectable to an outlet of a pressure build-up circuit and that is in fluid communication with the fluid inlet.

[0215] In another such embodiment, the pressure relief and vent module further comprises a vent receptacle supported by the housing and in fluid communication with the valve.

[0216] In another such embodiment, the pressure relief and vent module further comprises a second pressure relief device supported by the housing and in fluid communication with the fluid inlet and a pressure gauge supported by the housing and in fluid communication with the fluid inlet.

[0217] In various embodiments, a pressure relief and vent module for a cryogenic cylinder control system comprises a housing defining a fluid inlet and multiple mounting openings in fluid communication with the fluid inlet and a valve supported by the housing and in fluid communication with the fluid inlet. The valve is movable between a valve closed configuration in which the valve prevents fluid received at the fluid inlet from flowing through the valve and a valve open configuration in which the valve enables fluid received at the fluid inlet to flow through the valve.

[0218] In various embodiments, a manual valve module for a cryogenic cylinder control system comprises a housing, a first valve supported by the housing, a check valve

supported by the housing, and a second valve supported by the housing. The first valve is movable between a first valve closed configuration in which the first valve prevents fluid from flowing through the first valve and a first valve open configuration in which the first valve enables fluid to flow through the first valve. The second valve is movable between a second valve closed configuration in which the second valve prevents fluid from flowing through the second valve and a second valve open configuration in which the second valve enables fluid to flow through the second valve.

[0219] In one such embodiment, the first valve is a globe valve.

[0220] In another such embodiment, the first valve and the second valve are globe valves.

[0221] In another such embodiment, the manual valve module further comprises an excess flow valve in fluid communication with the second valve.

[0222] In various embodiments, a solenoid valve module for a cryogenic cylinder control system comprises a valve body defining a fluid inlet, a fluid outlet, and a combination fluid inlet/outlet, a first solenoid valve supported by the valve body, and a second solenoid valve supported by the valve body. The first solenoid valve is movable between a first closed configuration in which the first solenoid valve prevents fluid from flowing from the fluid inlet to the combination fluid inlet/outlet and a first open configuration in which the first solenoid valve enables fluid to flow from the fluid inlet to the combination fluid inlet/outlet. The second solenoid valve is movable between a second closed configuration in which the second solenoid valve prevents fluid from flowing from the combination fluid inlet/outlet to the fluid outlet and a second open configuration in which the second solenoid valve enables fluid to flow from the combination fluid inlet/outlet to the fluid outlet.

[0223] In one such embodiment, the first solenoid valve comprises a first electromagnetic coil, is biased to the first closed configuration, and is configured to move from the first closed configuration to the first open configuration when the first electromagnetic coil is energized.

[0224] In another such embodiment, the second solenoid valve comprises a second electromagnetic coil, is biased to the second closed configuration, and is configured to move from the second closed configuration to the second open configuration when the second electromagnetic coil is energized.

[0225] In various embodiments, a valve for conveying fluid comprises a valve body comprising a valve seat and defining an inlet and an outlet in fluid communication with one another, a gland nut mounted to the valve body, a lower spindle threadably engaged to the valve body, a seat disc mounted to the lower spindle, an upper spindle matingly engaged to the lower spindle such that rotation of the upper spindle causes the lower spindle to rotate, and a biasing member extending between the upper and lower spindles and biasing the upper spindle into sealing engagement with the gland nut. The valve is movable between a closed configuration in which the seat disc sealingly engages the valve seat and prevents fluid flow from the inlet to the outlet and an open configuration in which the seat disc is disengaged from the valve seat and enables fluid flow from the inlet to the outlet.

[0226] In one such embodiment, the upper spindle is in the same position when the valve is in the closed and open configurations.

[0227] In another such embodiment, when the valve is in the open configuration, rotation of the upper spindle in a first direction causes the lower spindle to begin threading off of the valve body and moving toward the valve seat.

[0228] In another such embodiment, when the valve is in the closed configuration, rotation of the upper spindle in a second direction different from the first direction causes the lower spindle to begin threading back onto the valve body and moving away from the valve seat.

[0229] In another such embodiment, the valve further comprises a first sealing member between the gland nut and the upper spindle, wherein the biasing member biases the upper spindle into contact with the first sealing member to compress the first sealing member between the gland nut and the upper spindle.

[0230] In another such embodiment, the valve further comprises a second sealing member between the gland nut and the upper spindle.

[0231] In another such embodiment, the first sealing member comprises a tapered outer surface.

[0232] In another such embodiment, the upper and lower spindles are rotatable relative to the gland nut and the valve body.

[0233] In another such embodiment, the upper spindle comprises a lower spindle engaging portion, the lower spindle includes an upper spindle engaging surface that defines an upper spindle receiving bore, and the lower spindle engaging portion of the upper spindle is received in the upper spindle receiving bore defined by the lower spindle to matingly engage the upper spindle to the lower spindle.

[0234] In another such embodiment, the lower spindle engaging portion comprises multiple flats that each engage part of the upper spindle engaging surface of the lower spindle.

[0235] In another such embodiment, the upper spindle comprises a tool engaging portion shaped for engagement by a tool to facilitate rotation of the upper spindle.

[0236] In various embodiments, a solenoid valve assembly comprises a valve body comprising a valve seat and defining an inlet and an outlet in fluid communication with one another, a cartridge mounted to the valve body, a plunger slidably received by the cartridge, a seat disc holder slidably received by the cartridge, a retainer attached to the seat disc holder such that the retainer and the seat disc holder form a plunger head receiving cavity that houses a head of the plunger, a seat disc attached to the seat disc holder, and an electromagnetic coil energizable to cause the solenoid valve assembly to move from a closed configuration in which the seat disc sealingly engages the valve seat and prevents fluid flow from the inlet to the outlet to an open configuration in which the seat disc is disengaged from the valve seat and enables fluid flow from the inlet to the outlet.

[0237] In one such embodiment, the electromagnetic coil is energizable to cause the solenoid valve assembly to move from the closed configuration to a first intermediate configuration, from the first intermediate configuration to a second intermediate configuration, and from the second intermediate configuration to the open configuration.

[0238] In another such embodiment, the plunger is in a first plunger position when the solenoid valve assembly is in the closed configuration and a second plunger position different from the first plunger position when the solenoid valve assembly is in the first intermediate configuration.

[0239] In another such embodiment, the plunger is in a third plunger position different from the first and second plunger positions when the solenoid valve assembly is in the second intermediate configuration.

[0240] In another such embodiment, the plunger is in the third plunger position when the solenoid valve assembly is in the open configuration.

[0241] In another such embodiment, the seat disc holder is in a first seat disc holder position when the solenoid valve assembly is in the closed configuration and when the solenoid valve assembly is in the first intermediate configuration.

[0242] In another such embodiment, the seat disc holder is in a second seat disc holder position different from the first seat disc holder position when the solenoid valve assembly is in the first intermediate configuration.

[0243] In another such embodiment, the seat disc holder is in a third seat disc holder position different from the second seat disc holder position when the solenoid valve assembly is in the second intermediate configuration.

[0244] In another such embodiment, the retainer is in a first retainer position when the solenoid valve assembly is in the closed configuration and when the solenoid valve assembly is in the first intermediate configuration.

[0245] In another such embodiment, the retainer is in a second retainer position different from the first retainer position when the solenoid valve assembly is in the first intermediate configuration.

[0246] In another such embodiment, the retainer is in a third retainer position different from the second retainer position when the solenoid valve assembly is in the second intermediate configuration.

[0247] In another such embodiment, the seat disc is in a first seat disc position when the solenoid valve assembly is in the closed configuration and when the solenoid valve assembly is in the first intermediate configuration.

[0248] In another such embodiment, the seat disc is in a second seat disc position different from the first seat disc position when the solenoid valve assembly is in the first intermediate configuration.

[0249] In another such embodiment, the seat disc is in a third seat disc position different from the second seat disc position when the solenoid valve assembly is in the second intermediate configuration.

[0250] In another such embodiment, the seat disc sealingly engages the valve seat when the solenoid valve assembly is in the closed configuration and when the solenoid valve assembly is in the first intermediate configuration.

[0251] In another such embodiment, movement of the solenoid valve assembly from the closed configuration to the open configuration comprises movement of the plunger relative to the seat disc holder, the retainer, and the seat disc and subsequent movement of the seat disc holder, the retainer, and the seat disc relative to the plunger.

[0252] In another such embodiment, the solenoid valve assembly further comprises a biasing member that biases the solenoid valve assembly to the closed configuration.

[0253] In another such embodiment, the biasing member extends between the cartridge and the plunger.

What is claimed is:

1. A valve for conveying fluid, comprising:

a valve body;

a valve seat;

a gland nut coupled to the valve body;

a lower spindle threadably engaged to the valve body, wherein the lower spindle defines a first bore;

a seat disc mounted to the lower spindle and configured to engage the valve seat in a closed configuration and be disengaged from the valve seat in an open configuration;

an upper spindle defining a spring bore, wherein a portion of the upper spindle is received in the first bore of the lower spindle to matingly engage the upper spindle to the lower spindle such that rotation of the upper spindle causes rotation of the lower spindle; and

a spring extending between the upper spindle and the lower spindle and at least partially disposed in the spring bore of the upper spindle, wherein the spring is configured to bias the upper spindle to sealingly engage the gland nut.

2. The valve of claim **1**, wherein the upper spindle is configured to remain in a position that maintains sealing engagement with the gland nut in the closed configuration, in the open configuration, and when transitioning between the open configuration and the closed configuration.

3. The valve of claim **2**, wherein the spring is configured to bias the upper spindle to remain in sealed engagement with the gland nut in the closed configuration, in the open configuration, and when transitioning between the closed configuration and the open configuration.

4. The valve of claim **1**, wherein the upper spindle and the lower spindle are rotatable relative to the gland nut and the valve body.

5. The valve of claim **1**, wherein the upper spindle is configured to matingly engage the lower spindle such that, in the open configuration, rotation of the upper spindle in a first direction causes the lower spindle to begin threading off of the valve body and move toward the valve seat.

6. The valve of claim **5**, wherein the upper spindle is configured to matingly engage the lower spindle such that, in the closed configuration, rotation of the upper spindle in an opposing second direction causes the lower spindle to thread back onto the valve body and move away from the valve seat.

7. The valve of claim **1**, further comprising a seal positioned between the gland nut and the upper spindle, wherein the spring is configured to bias the upper spindle to contact the seal and compress the seal between the gland nut and the upper spindle.

8. The valve of claim **1**, wherein, to matingly engage the upper spindle to the lower spindle, the portion of the upper spindle that is received in the first bore of the lower spindle comprises flats that each engage part of the lower spindle.

9. A valve for conveying fluid, comprising:

a valve body comprising a valve seat and defining an inlet and an outlet in fluid communication with one another;

a gland nut coupled to the valve body; a lower spindle threadably engaged to the valve body, wherein the lower spindle defines a first bore;

a seat disc mounted to the lower spindle;

an upper spindle defining a spring bore, wherein a portion of the upper spindle is received in the first bore of the lower spindle to matingly engage the upper spindle to the lower spindle such that rotation of the upper spindle causes rotation of the lower spindle; and

a spring extending between the upper spindle and the lower spindle and at least partially disposed in the spring bore of the upper spindle, wherein the spring is

configured to bias the upper spindle to sealingly engage the gland nut, wherein the valve is movable between a closed configuration in which the seat disc sealingly engages the valve seat and prevents fluid flow from the inlet to the outlet and an open configuration in which the seat disc is disengaged from the valve seat and enables fluid flow from the inlet to the outlet.

10. The valve of claim **9**, wherein the spring is configured to bias the upper spindle to remain in a position that maintains sealing engagement with the gland nut when the valve is in the closed configuration, when the valve is in the open configuration, and as the valve transitions between the closed configuration and the open configuration.

11. The valve of claim **9**, wherein the upper spindle and the lower spindle are rotatable relative to the gland nut and the valve body.

12. The valve of claim **9**, wherein the upper spindle is configured to matingly engage the lower spindle such that, when the valve is in the open configuration, rotation of the upper spindle in a first direction causes the lower spindle to begin threading off of the valve body and move toward the valve seat.

13. The valve of claim **12**, wherein the upper spindle is configured to matingly engage the lower spindle such that, when the valve is in the closed configuration, rotation of the upper spindle in an opposing second direction causes the lower spindle to thread back onto the valve body and move away from the valve seat.

14. The valve of claim **9**, wherein, to matingly engage the upper spindle to the lower spindle, the portion of the upper spindle that is received in the first bore of the lower spindle comprises flats that each engage part of the lower spindle.

15. A valve for conveying fluid, comprising:

a valve body;

a valve seat;

a gland nut coupled to the valve body;

a lower spindle threadably engaged to the valve body, wherein the lower spindle comprises an upper spindle engaging surface that defines a first bore;

a seat disc mounted to the lower spindle and configured to engage the valve seat in a closed configuration and be disengaged from the valve seat in an open configuration;

an upper spindle comprising a lower spindle engaging portion defining a spring bore, wherein the lower spindle engaging portion is received in the first bore of the lower spindle to matingly engage the upper spindle to the lower spindle such that rotation of the upper spindle causes rotation of the lower spindle; and

a spring extending between the upper spindle and the lower spindle and at least partially disposed in the spring bore of the upper spindle, wherein the spring is configured to bias the upper spindle to sealingly engage the gland nut.

16. The valve of claim **15**, wherein the spring is configured to bias the upper spindle to remain in a position that maintains sealing engagement with the gland nut in the closed configuration, is in the open configuration, and when transitioning between the closed configuration and the open configuration.

17. The valve of claim **15**, wherein the upper spindle and the lower spindle are rotatable relative to the gland nut and the valve body.

18. The valve of claim **15**, wherein the upper spindle is configured to matingly engage the lower spindle such that, in the open configuration, rotation of the upper spindle in a first direction causes the lower spindle to begin threading off of the valve body and move toward the valve seat.

19. The valve of claim **18**, wherein the upper spindle is configured to matingly engage the lower spindle such that, in the closed configuration, rotation of the upper spindle in an opposing second direction causes the lower spindle to thread back onto the valve body and move away from the valve seat.

20. The valve of claim **15**, wherein, to matingly engage the upper spindle to the lower spindle, the lower spindle engaging portion of the upper spindle comprises flats that each engage part of the upper spindle engaging surface of the lower spindle.

* * * * *