UNITED STATES PATENT AND TRADEMARK OFFICE

UNITED STATES DEPARTMENT OF COMMERCE
United States Patent and Trademark Office
Address: COMMISSIONER FOR PATENTS
P.O. Box 1450
Alexandria, Virginia 22313-1450
www.uspto.gov

APPLICATION NO.	ISSUE DATE	PATENT NO.	ATTORNEY DOCKET NO.	CONFIRMATION NO.
14/164,424	09/22/2015	9139993	171401-1034	2529

24504 7590 09/02/2015
THOMAS | HORSTEMEYER, LLP
400 INTERSTATE NORTH PARKWAY SE
SUITE 1500
ATLANTA, GA 30339

ISSUE NOTIFICATION

The projected patent number and issue date are specified above.

Determination of Patent Term Adjustment under 35 U.S.C. 154 (b)
(application filed on or after May 29, 2000)

The Patent Term Adjustment is 0 day(s). Any patent to issue from the above-identified application will include an indication of the adjustment on the front page.

If a Continued Prosecution Application (CPA) was filed in the above-identified application, the filing date that determines Patent Term Adjustment is the filing date of the most recent CPA.

Applicant will be able to obtain more detailed information by accessing the Patent Application Information Retrieval (PAIR) WEB site (http://pair.uspto.gov).

Any questions regarding the Patent Term Extension or Adjustment determination should be directed to the Office of Patent Legal Administration at (571)-272-7702. Questions relating to issue and publication fee payments should be directed to the Application Assistance Unit (AAU) of the Office of Data Management (ODM) at (571)-272-4200.

APPLICANT(s) (Please see PAIR WEB site http://pair.uspto.gov for additional applicants):

Danco, Inc., Irving, TX
Michael J. Schuster, Shorewood, IL;
Larry Schneider, Wadsworth, IL;

The United States represents the largest, most dynamic marketplace in the world and is an unparalleled location for business investment, innovation, and commercialization of new technologies. The USA offers tremendous resources and advantages for those who invest and manufacture goods here. Through SelectUSA, our nation works to encourage and facilitate business investment. To learn more about why the USA is the best country in the world to develop technology, manufacture products, and grow your business, visit SelectUSA.gov.

IR103 (Rev. 10/09)

PART B - FEE(S) TRANSMITTAL

Complete and send this form, together with applicable fee(s), to: Mail **Mail Stop ISSUE FEE**
Commissioner for Patents
P.O. Box 1450
Alexandria, Virginia 22313-1450
or Fax (571)-273-2885

INSTRUCTIONS: This form should be used for transmitting the ISSUE FEE and PUBLICATION FEE (if required). Blocks 1 through 5 should be completed where appropriate. All further correspondence including the Patent, advance orders and notification of maintenance fees will be mailed to the current correspondence address as indicated unless corrected below or directed otherwise in Block 1, by (a) specifying a new correspondence address; and/or (b) indicating a separate "FEE ADDRESS" for maintenance fee notifications.

CURRENT CORRESPONDENCE ADDRESS (Note: Use Block 1 for any change of address)

24504 7590 05/19/2015
THOMAS | HORSTEMEYER, LLP
400 INTERSTATE NORTH PARKWAY SE
SUITE 1500
ATLANTA, GA 30339

Note: A certificate of mailing can only be used for domestic mailings of the Fee(s) Transmittal. This certificate cannot be used for any other accompanying papers. Each additional paper, such as an assignment or formal drawing, must have its own certificate of mailing or transmission.

Certificate of Mailing or Transmission
I hereby certify that this Fee(s) Transmittal is being deposited with the United States Postal Service with sufficient postage for first class mail in an envelope addressed to the Mail Stop ISSUE FEE address above, or being facsimile transmitted to the USPTO (571) 273-2885, on the date indicated below.

(Depositor's name)
(Signature)
(Date)

APPLICATION NO.	FILING DATE	FIRST NAMED INVENTOR	ATTORNEY DOCKET NO.	CONFIRMATION NO.
14/164,424	01/27/2014	Michael J. Schuster	171401-1034	2529

TITLE OF INVENTION: TOILET FILL VALVE

APPLN. TYPE	ENTITY STATUS	ISSUE FEE DUE	PUBLICATION FEE DUE	PREV. PAID ISSUE FEE	TOTAL FEE(S) DUE	DATE DUE
nonprovisional	UNDISCOUNTED	$960	$0	$0	$960	08/19/2015

EXAMINER	ART UNIT	CLASS-SUBCLASS
NGUYEN, TUAN N	3754	004-415000

1. Change of correspondence address or indication of "Fee Address" (37 CFR 1.363).
- ❑ Change of correspondence address (or Change of Correspondence Address form PTO/SB/122) attached.
- ❑ "Fee Address" indication (or "Fee Address" Indication form PTO/SB/47; Rev 03-02 or more recent) attached. **Use of a Customer Number is required.**

2. For printing on the patent front page, list
(1) The names of up to 3 registered patent attorneys or agents OR, alternatively,
(2) The name of a single firm (having as a member a registered attorney or agent) and the names of up to 2 registered patent attorneys or agents. If no name is listed, no name will be printed.

1 Thomas|Horstemeyer,
2 LLP
3

3. ASSIGNEE NAME AND RESIDENCE DATA TO BE PRINTED ON THE PATENT (print or type)

PLEASE NOTE: Unless an assignee is identified below, no assignee data will appear on the patent. If an assignee is identified below, the document has been filed for recordation as set forth in 37 CFR 3.11. Completion of this form is NOT a substitute for filing an assignment.

(A) NAME OF ASSIGNEE
Danco, Inc.

(B) RESIDENCE: (CITY and STATE OR COUNTRY)
Irving, Texas

Please check the appropriate assignee category or categories (will not be printed on the patent) : ❑ Individual ❑ Corporation or other private group entity ❑ Government

4a. The following fee(s) are submitted:
- ☒ Issue Fee
- ❑ Publication Fee (No small entity discount permitted)
- ❑ Advance Order - # of Copies _____

4b. Payment of Fee(s): (**Please first reapply any previously paid issue fee shown above**)
- ❑ A check is enclosed.
- ☒ Payment by credit card. Form PTO-2038 is attached.
- ☒ The director is hereby authorized to charge the required fee(s), any deficiency, or credits any overpayment, to Deposit Account Number 20-0778 (enclose an extra copy of this form).

5. **Change in Entity Status** (from status indicated above)
- ❑ Applicant certifying micro entity status. See 37 CFR 1.29 — NOTE: Absent a valid certification of Micro Entity Status (see forms PTO/SB/15A and 15B), issue fee payment in the micro entity amount will not be accepted at the risk of application abandonment.
- ❑ Applicant asserting small entity status. See 37 CFR 1.27 — NOTE: If the application was previously under micro entity status, checking this box will be taken to be a notification of loss of entitlement to micro entity status.
- ❑ Applicant changing to regular undiscounted fee status. — NOTE: Checking this box will be taken to be a notification of loss of entitlement to small or micro entity status, as applicable.

NOTE: This form must be signed in accordance with 37 CFR 1.31 and 1.33. See 37 CFR 1.4 for signature requirements and certifications.

Authorized Signature /RDG/ Date August 17, 2015

Typed or printed name Robert D. Gravois Registration No. 67,244

PTOL-85 Part B (10-13) Approved for use through 10/31/2013. OMB 0651-0033 U.S. Patent and Trademark Office; U.S. DEPARTMENT OF COMMERCE

Fluidmaster, Inc. - EX1008, Page 002
IPR2024-00634 (Fluidmaster Inc v. Danco Inc)

Electronic Patent Application Fee Transmittal

Application Number:	14164424
Filing Date:	27-Jan-2014
Title of Invention:	TOILET FILL VALVE
First Named Inventor/Applicant Name:	Michael J. Schuster
Filer:	Robert D. Gravois/Jennifer Savage
Attorney Docket Number:	171401-1034

Filed as Large Entity

Filing Fees for Utility under 35 USC 111(a)

Description	Fee Code	Quantity	Amount	Sub-Total in USD($)
Basic Filing:				
Pages:				
Claims:				
Miscellaneous-Filing:				
Petition:				
Patent-Appeals-and-Interference:				
Post-Allowance-and-Post-Issuance:				
Utility Appl Issue Fee	1501	1	960	960

Description	Fee Code	Quantity	Amount	Sub-Total in USD($)
Extension-of-Time:				
Miscellaneous:				
		Total in USD ($)		**960**

Electronic Acknowledgement Receipt	
EFS ID:	23228576
Application Number:	14164424
International Application Number:	
Confirmation Number:	2529
Title of Invention:	TOILET FILL VALVE
First Named Inventor/Applicant Name:	Michael J. Schuster
Customer Number:	24504
Filer:	Robert D. Gravois/Jennifer Savage
Filer Authorized By:	Robert D. Gravois
Attorney Docket Number:	171401-1034
Receipt Date:	17-AUG-2015
Filing Date:	27-JAN-2014
Time Stamp:	17:09:58
Application Type:	Utility under 35 USC 111(a)

Payment information:

Submitted with Payment	yes
Payment Type	Credit Card
Payment was successfully received in RAM	$960
RAM confirmation Number	4154
Deposit Account	200778
Authorized User	GRAVOIS, ROBERT
The Director of the USPTO is hereby authorized to charge indicated fees and credit any overpayment as follows:	

Charge any Additional Fees required under 37 C.F.R. Section 1.20 (Post Issuance fees)

File Listing:

Document Number	Document Description	File Name	File Size(Bytes)/ Message Digest	Multi Part /.zip	Pages (if appl.)
1	Issue Fee Payment (PTO-85B)	02258269.PDF	127312 00b69160a7e2249cb01f7117ba289161a828a016	no	1
Warnings:					
Information:					
2	Fee Worksheet (SB06)	fee-info.pdf	30338 b0944dd17c835df00e6edf5b2b14a2a6527bf223	no	2
Warnings:					
Information:					
		Total Files Size (in bytes):	157650		

This Acknowledgement Receipt evidences receipt on the noted date by the USPTO of the indicated documents, characterized by the applicant, and including page counts, where applicable. It serves as evidence of receipt similar to a Post Card, as described in MPEP 503.

New Applications Under 35 U.S.C. 111
If a new application is being filed and the application includes the necessary components for a filing date (see 37 CFR 1.53(b)-(d) and MPEP 506), a Filing Receipt (37 CFR 1.54) will be issued in due course and the date shown on this Acknowledgement Receipt will establish the filing date of the application.

National Stage of an International Application under 35 U.S.C. 371
If a timely submission to enter the national stage of an international application is compliant with the conditions of 35 U.S.C. 371 and other applicable requirements a Form PCT/DO/EO/903 indicating acceptance of the application as a national stage submission under 35 U.S.C. 371 will be issued in addition to the Filing Receipt, in due course.

New International Application Filed with the USPTO as a Receiving Office
If a new international application is being filed and the international application includes the necessary components for an international filing date (see PCT Article 11 and MPEP 1810), a Notification of the International Application Number and of the International Filing Date (Form PCT/RO/105) will be issued in due course, subject to prescriptions concerning national security, and the date shown on this Acknowledgement Receipt will establish the international filing date of the application.

UNITED STATES PATENT AND TRADEMARK OFFICE

UNITED STATES DEPARTMENT OF COMMERCE
United States Patent and Trademark Office
Address: COMMISSIONER FOR PATENTS
P.O. Box 1450
Alexandria, Virginia 22313-1450
www.uspto.gov

NOTICE OF ALLOWANCE AND FEE(S) DUE

24504 7590 05/19/2015
THOMAS | HORSTEMEYER, LLP
400 INTERSTATE NORTH PARKWAY SE
SUITE 1500
ATLANTA, GA 30339

EXAMINER
NGUYEN, TUAN N

ART UNIT	PAPER NUMBER
3754	

DATE MAILED: 05/19/2015

APPLICATION NO.	FILING DATE	FIRST NAMED INVENTOR	ATTORNEY DOCKET NO.	CONFIRMATION NO.
14/164,424	01/27/2014	Michael J. Schuster	171401-1034	2529

TITLE OF INVENTION: TOILET FILL VALVE

APPLN. TYPE	ENTITY STATUS	ISSUE FEE DUE	PUBLICATION FEE DUE	PREV. PAID ISSUE FEE	TOTAL FEE(S) DUE	DATE DUE
nonprovisional	UNDISCOUNTED	$960	$0	$0	$960	08/19/2015

THE APPLICATION IDENTIFIED ABOVE HAS BEEN EXAMINED AND IS ALLOWED FOR ISSUANCE AS A PATENT. PROSECUTION ON THE MERITS IS CLOSED. THIS NOTICE OF ALLOWANCE IS NOT A GRANT OF PATENT RIGHTS. THIS APPLICATION IS SUBJECT TO WITHDRAWAL FROM ISSUE AT THE INITIATIVE OF THE OFFICE OR UPON PETITION BY THE APPLICANT. SEE 37 CFR 1.313 AND MPEP 1308.

THE ISSUE FEE AND PUBLICATION FEE (IF REQUIRED) MUST BE PAID WITHIN THREE MONTHS FROM THE MAILING DATE OF THIS NOTICE OR THIS APPLICATION SHALL BE REGARDED AS ABANDONED. THIS STATUTORY PERIOD CANNOT BE EXTENDED. SEE 35 U.S.C. 151. THE ISSUE FEE DUE INDICATED ABOVE DOES NOT REFLECT A CREDIT FOR ANY PREVIOUSLY PAID ISSUE FEE IN THIS APPLICATION. IF AN ISSUE FEE HAS PREVIOUSLY BEEN PAID IN THIS APPLICATION (AS SHOWN ABOVE), THE RETURN OF PART B OF THIS FORM WILL BE CONSIDERED A REQUEST TO REAPPLY THE PREVIOUSLY PAID ISSUE FEE TOWARD THE ISSUE FEE NOW DUE.

HOW TO REPLY TO THIS NOTICE:

I. Review the ENTITY STATUS shown above. If the ENTITY STATUS is shown as SMALL or MICRO, verify whether entitlement to that entity status still applies.

If the ENTITY STATUS is the same as shown above, pay the TOTAL FEE(S) DUE shown above.

If the ENTITY STATUS is changed from that shown above, on PART B - FEE(S) TRANSMITTAL, complete section number 5 titled "Change in Entity Status (from status indicated above)".

For purposes of this notice, small entity fees are 1/2 the amount of undiscounted fees, and micro entity fees are 1/2 the amount of small entity fees.

II. PART B - FEE(S) TRANSMITTAL, or its equivalent, must be completed and returned to the United States Patent and Trademark Office (USPTO) with your ISSUE FEE and PUBLICATION FEE (if required). If you are charging the fee(s) to your deposit account, section "4b" of Part B - Fee(s) Transmittal should be completed and an extra copy of the form should be submitted. If an equivalent of Part B is filed, a request to reapply a previously paid issue fee must be clearly made, and delays in processing may occur due to the difficulty in recognizing the paper as an equivalent of Part B.

III. All communications regarding this application must give the application number. Please direct all communications prior to issuance to Mail Stop ISSUE FEE unless advised to the contrary.

IMPORTANT REMINDER: Utility patents issuing on applications filed on or after Dec. 12, 1980 may require payment of maintenance fees. It is patentee's responsibility to ensure timely payment of maintenance fees when due.

PTOL-85 (Rev. 02/11)

Fluidmaster, Inc. - EX1008, Page 007
IPR2024-00634 (Fluidmaster Inc v. Danco Inc)

PART B - FEE(S) TRANSMITTAL

Complete and send this form, together with applicable fee(s), to: Mail **Mail Stop ISSUE FEE**
Commissioner for Patents
P.O. Box 1450
Alexandria, Virginia 22313-1450
or Fax (571)-273-2885

INSTRUCTIONS: This form should be used for transmitting the ISSUE FEE and PUBLICATION FEE (if required). Blocks 1 through 5 should be completed where appropriate. All further correspondence including the Patent, advance orders and notification of maintenance fees will be mailed to the current correspondence address as indicated unless corrected below or directed otherwise in Block 1, by (a) specifying a new correspondence address; and/or (b) indicating a separate "FEE ADDRESS" for maintenance fee notifications.

CURRENT CORRESPONDENCE ADDRESS (Note: Use Block 1 for any change of address)

24504 7590 05/19/2015
THOMAS | HORSTEMEYER, LLP
400 INTERSTATE NORTH PARKWAY SE
SUITE 1500
ATLANTA, GA 30339

Note: A certificate of mailing can only be used for domestic mailings of the Fee(s) Transmittal. This certificate cannot be used for any other accompanying papers. Each additional paper, such as an assignment or formal drawing, must have its own certificate of mailing or transmission.

Certificate of Mailing or Transmission
I hereby certify that this Fee(s) Transmittal is being deposited with the United States Postal Service with sufficient postage for first class mail in an envelope addressed to the Mail Stop ISSUE FEE address above, or being facsimile transmitted to the USPTO (571) 273-2885, on the date indicated below.

(Depositor's name)
(Signature)
(Date)

APPLICATION NO.	FILING DATE	FIRST NAMED INVENTOR	ATTORNEY DOCKET NO.	CONFIRMATION NO.
14/164,424	01/27/2014	Michael J. Schuster	171401-1034	2529

TITLE OF INVENTION: TOILET FILL VALVE

APPLN. TYPE	ENTITY STATUS	ISSUE FEE DUE	PUBLICATION FEE DUE	PREV. PAID ISSUE FEE	TOTAL FEE(S) DUE	DATE DUE
nonprovisional	UNDISCOUNTED	$960	$0	$0	$960	08/19/2015

EXAMINER	ART UNIT	CLASS-SUBCLASS
NGUYEN, TUAN N	3754	004-415000

1. Change of correspondence address or indication of "Fee Address" (37 CFR 1.363).
- ❑ Change of correspondence address (or Change of Correspondence Address form PTO/SB/122) attached.
- ❑ "Fee Address" indication (or "Fee Address" Indication form PTO/SB/47; Rev 03-02 or more recent) attached. **Use of a Customer Number is required.**

2. For printing on the patent front page, list
(1) The names of up to 3 registered patent attorneys or agents OR, alternatively,
(2) The name of a single firm (having as a member a registered attorney or agent) and the names of up to 2 registered patent attorneys or agents. If no name is listed, no name will be printed.

1_____
2_____
3_____

3. ASSIGNEE NAME AND RESIDENCE DATA TO BE PRINTED ON THE PATENT (print or type)

PLEASE NOTE: Unless an assignee is identified below, no assignee data will appear on the patent. If an assignee is identified below, the document has been filed for recordation as set forth in 37 CFR 3.11. Completion of this form is NOT a substitute for filing an assignment.

(A) NAME OF ASSIGNEE (B) RESIDENCE: (CITY and STATE OR COUNTRY)

Please check the appropriate assignee category or categories (will not be printed on the patent) : ❑ Individual ❑ Corporation or other private group entity ❑ Government

4a. The following fee(s) are submitted:
- ❑ Issue Fee
- ❑ Publication Fee (No small entity discount permitted)
- ❑ Advance Order - # of Copies _____

4b. Payment of Fee(s): (**Please first reapply any previously paid issue fee shown above**)
- ❑ A check is enclosed.
- ❑ Payment by credit card. Form PTO-2038 is attached.
- ❑ The director is hereby authorized to charge the required fee(s), any deficiency, or credits any overpayment, to Deposit Account Number _____ (enclose an extra copy of this form).

5. **Change in Entity Status** (from status indicated above)
- ❑ Applicant certifying micro entity status. See 37 CFR 1.29 — NOTE: Absent a valid certification of Micro Entity Status (see forms PTO/SB/15A and 15B), issue fee payment in the micro entity amount will not be accepted at the risk of application abandonment.
- ❑ Applicant asserting small entity status. See 37 CFR 1.27 — NOTE: If the application was previously under micro entity status, checking this box will be taken to be a notification of loss of entitlement to micro entity status.
- ❑ Applicant changing to regular undiscounted fee status. — NOTE: Checking this box will be taken to be a notification of loss of entitlement to small or micro entity status, as applicable.

NOTE: This form must be signed in accordance with 37 CFR 1.31 and 1.33. See 37 CFR 1.4 for signature requirements and certifications.

Authorized Signature _____ Date _____

Typed or printed name _____ Registration No. _____

PTOL-85 Part B (10-13) Approved for use through 10/31/2013. OMB 0651-0033 U.S. Patent and Trademark Office; U.S. DEPARTMENT OF COMMERCE

Fluidmaster, Inc. - EX1008, Page 008
IPR2024-00634 (Fluidmaster Inc v. Danco Inc)

UNITED STATES PATENT AND TRADEMARK OFFICE

UNITED STATES DEPARTMENT OF COMMERCE
United States Patent and Trademark Office
Address: COMMISSIONER FOR PATENTS
P.O. Box 1450
Alexandria, Virginia 22313-1450
www.uspto.gov

APPLICATION NO.	FILING DATE	FIRST NAMED INVENTOR	ATTORNEY DOCKET NO.	CONFIRMATION NO.
14/164,424	01/27/2014	Michael J. Schuster	171401-1034	2529

24504 7590 05/19/2015
THOMAS | HORSTEMEYER, LLP
400 INTERSTATE NORTH PARKWAY SE
SUITE 1500
ATLANTA, GA 30339

EXAMINER
NGUYEN, TUAN N

ART UNIT	PAPER NUMBER
3754	

DATE MAILED: 05/19/2015

Determination of Patent Term Adjustment under 35 U.S.C. 154 (b)
(Applications filed on or after May 29, 2000)

The Office has discontinued providing a Patent Term Adjustment (PTA) calculation with the Notice of Allowance.

Section 1(h)(2) of the AIA Technical Corrections Act amended 35 U.S.C. 154(b)(3)(B)(i) to eliminate the requirement that the Office provide a patent term adjustment determination with the notice of allowance. See Revisions to Patent Term Adjustment, 78 Fed. Reg. 19416, 19417 (Apr. 1, 2013). Therefore, the Office is no longer providing an initial patent term adjustment determination with the notice of allowance. The Office will continue to provide a patent term adjustment determination with the Issue Notification Letter that is mailed to applicant approximately three weeks prior to the issue date of the patent, and will include the patent term adjustment on the patent. Any request for reconsideration of the patent term adjustment determination (or reinstatement of patent term adjustment) should follow the process outlined in 37 CFR 1.705.

Any questions regarding the Patent Term Extension or Adjustment determination should be directed to the Office of Patent Legal Administration at (571)-272-7702. Questions relating to issue and publication fee payments should be directed to the Customer Service Center of the Office of Patent Publication at 1-(888)-786-0101 or (571)-272-4200.

PTOL-85 (Rev. 02/11)

Fluidmaster, Inc. - EX1008, Page 009
IPR2024-00634 (Fluidmaster Inc v. Danco Inc)

OMB Clearance and PRA Burden Statement for PTOL-85 Part B

The Paperwork Reduction Act (PRA) of 1995 requires Federal agencies to obtain Office of Management and Budget approval before requesting most types of information from the public. When OMB approves an agency request to collect information from the public, OMB (i) provides a valid OMB Control Number and expiration date for the agency to display on the instrument that will be used to collect the information and (ii) requires the agency to inform the public about the OMB Control Number's legal significance in accordance with 5 CFR 1320.5(b).

The information collected by PTOL-85 Part B is required by 37 CFR 1.311. The information is required to obtain or retain a benefit by the public which is to file (and by the USPTO to process) an application. Confidentiality is governed by 35 U.S.C. 122 and 37 CFR 1.14. This collection is estimated to take 12 minutes to complete, including gathering, preparing, and submitting the completed application form to the USPTO. Time will vary depending upon the individual case. Any comments on the amount of time you require to complete this form and/or suggestions for reducing this burden, should be sent to the Chief Information Officer, U.S. Patent and Trademark Office, U.S. Department of Commerce, P.O. Box 1450, Alexandria, Virginia 22313-1450. DO NOT SEND FEES OR COMPLETED FORMS TO THIS ADDRESS. SEND TO: Commissioner for Patents, P.O. Box 1450, Alexandria, Virginia 22313-1450. Under the Paperwork Reduction Act of 1995, no persons are required to respond to a collection of information unless it displays a valid OMB control number.

Privacy Act Statement

The Privacy Act of 1974 (P.L. 93-579) requires that you be given certain information in connection with your submission of the attached form related to a patent application or patent. Accordingly, pursuant to the requirements of the Act, please be advised that: (1) the general authority for the collection of this information is 35 U.S.C. 2(b)(2); (2) furnishing of the information solicited is voluntary; and (3) the principal purpose for which the information is used by the U.S. Patent and Trademark Office is to process and/or examine your submission related to a patent application or patent. If you do not furnish the requested information, the U.S. Patent and Trademark Office may not be able to process and/or examine your submission, which may result in termination of proceedings or abandonment of the application or expiration of the patent.

The information provided by you in this form will be subject to the following routine uses:

1. The information on this form will be treated confidentially to the extent allowed under the Freedom of Information Act (5 U.S.C. 552) and the Privacy Act (5 U.S.C 552a). Records from this system of records may be disclosed to the Department of Justice to determine whether disclosure of these records is required by the Freedom of Information Act.
2. A record from this system of records may be disclosed, as a routine use, in the course of presenting evidence to a court, magistrate, or administrative tribunal, including disclosures to opposing counsel in the course of settlement negotiations.
3. A record in this system of records may be disclosed, as a routine use, to a Member of Congress submitting a request involving an individual, to whom the record pertains, when the individual has requested assistance from the Member with respect to the subject matter of the record.
4. A record in this system of records may be disclosed, as a routine use, to a contractor of the Agency having need for the information in order to perform a contract. Recipients of information shall be required to comply with the requirements of the Privacy Act of 1974, as amended, pursuant to 5 U.S.C. 552a(m).
5. A record related to an International Application filed under the Patent Cooperation Treaty in this system of records may be disclosed, as a routine use, to the International Bureau of the World Intellectual Property Organization, pursuant to the Patent Cooperation Treaty.
6. A record in this system of records may be disclosed, as a routine use, to another federal agency for purposes of National Security review (35 U.S.C. 181) and for review pursuant to the Atomic Energy Act (42 U.S.C. 218(c)).
7. A record from this system of records may be disclosed, as a routine use, to the Administrator, General Services, or his/her designee, during an inspection of records conducted by GSA as part of that agency's responsibility to recommend improvements in records management practices and programs, under authority of 44 U.S.C. 2904 and 2906. Such disclosure shall be made in accordance with the GSA regulations governing inspection of records for this purpose, and any other relevant (i.e., GSA or Commerce) directive. Such disclosure shall not be used to make determinations about individuals.
8. A record from this system of records may be disclosed, as a routine use, to the public after either publication of the application pursuant to 35 U.S.C. 122(b) or issuance of a patent pursuant to 35 U.S.C. 151. Further, a record may be disclosed, subject to the limitations of 37 CFR 1.14, as a routine use, to the public if the record was filed in an application which became abandoned or in which the proceedings were terminated and which application is referenced by either a published application, an application open to public inspection or an issued patent.
9. A record from this system of records may be disclosed, as a routine use, to a Federal, State, or local law enforcement agency, if the USPTO becomes aware of a violation or potential violation of law or regulation.

Notice of Allowability	Application No.	Applicant(s)	
	14/164,424	SCHUSTER ET AL.	
	Examiner	Art Unit	
	TUAN N. NGUYEN	3754	

-- The MAILING DATE of this communication appears on the cover sheet with the correspondence address--

All claims being allowable, PROSECUTION ON THE MERITS IS (OR REMAINS) CLOSED in this application. If not included herewith (or previously mailed), a Notice of Allowance (PTOL-85) or other appropriate communication will be mailed in due course. **THIS NOTICE OF ALLOWABILITY IS NOT A GRANT OF PATENT RIGHTS.** This application is subject to withdrawal from issue at the initiative of the Office or upon petition by the applicant. See 37 CFR 1.313 and MPEP 1308.

1. ☒ This communication is responsive to *the amendment filed 4/13/15*.

2. ☒ The allowed claim(s) is/are *1,2,4-19,21 and 22*.

3. ☐ Acknowledgment is made of a claim for foreign priority under 35 U.S.C. § 119(a)-(d) or (f).

   a) ☐ All b) ☐ Some* c) ☐ None of the:

   1. ☐ Certified copies of the priority documents have been received.
   2. ☐ Certified copies of the priority documents have been received in Application No. _____ .
   3. ☐ Copies of the certified copies of the priority documents have been received in this national stage application from the International Bureau (PCT Rule 17.2(a)).

   * Certified copies not received: _____.

Applicant has THREE MONTHS FROM THE "MAILING DATE" of this communication to file a reply complying with the requirements noted below. Failure to timely comply will result in ABANDONMENT of this application.
THIS THREE-MONTH PERIOD IS NOT EXTENDABLE.

4. ☐ A SUBSTITUTE OATH OR DECLARATION must be submitted. Note the attached EXAMINER'S AMENDMENT or NOTICE OF INFORMAL PATENT APPLICATION (PTO-152) which gives reason(s) why the oath or declaration is deficient.

5. ☐ CORRECTED DRAWINGS (as "replacement sheets") must be submitted.

   (a) ☐ including changes required by the Notice of Draftsperson's Patent Drawing Review (PTO-948) attached
   1) ☐ hereto or 2) ☐ to Paper No./Mail Date _____.

   (b) ☐ including changes required by the attached Examiner's Amendment / Comment or in the Office action of Paper No./Mail Date _____.

   Identifying indicia such as the application number (see 37 CFR 1.84(c)) should be written on the drawings in the front (not the back) of each sheet. Replacement sheet(s) should be labeled as such in the header according to 37 CFR 1.121(d).

6. ☐ DEPOSIT OF and/or INFORMATION about the deposit of BIOLOGICAL MATERIAL must be submitted. Note the attached Examiner's comment regarding REQUIREMENT FOR THE DEPOSIT OF BIOLOGICAL MATERIAL.

Attachment(s)

1. ☐ Notice of References Cited (PTO-892)
2. ☐ Notice of Draftperson's Patent Drawing Review (PTO-948)
3. ☐ Information Disclosure Statements (PTO/SB/08), Paper No./Mail Date _____
4. ☐ Examiner's Comment Regarding Requirement for Deposit of Biological Material
5. ☐ Notice of Informal Patent Application
6. ☐ Interview Summary (PTO-413), Paper No./Mail Date ___ .
7. ☐ Examiner's Amendment/Comment
8. ☐ Examiner's Statement of Reasons for Allowance
9. ☐ Other _____.

/TUAN N NGUYEN/
Primary Examiner, Art Unit 3754

Fluidmaster, Inc. - EX1008, Page 011
IPR2024-00634 (Fluidmaster Inc v. Danco Inc)

UNITED STATES PATENT AND TRADEMARK OFFICE

UNITED STATES DEPARTMENT OF COMMERCE
United States Patent and Trademark Office
Address: COMMISSIONER FOR PATENTS
P.O. Box 1450
Alexandria, Virginia 22313-1450
www.uspto.gov

BIB DATA SHEET

CONFIRMATION NO. 2529

SERIAL NUMBER	FILING or 371(c) DATE	CLASS	GROUP ART UNIT	ATTORNEY DOCKET NO.
14/164,424	01/27/2014 RULE	004	3754	171401-1034

APPLICANTS
Danco, Inc., Irving, TX

INVENTORS
Michael J. Schuster, Shorewood, IL;
Larry Schneider, Wadsworth, IL;

**** CONTINUING DATA ***************************
This application is a CON of 13/346,355 01/09/2012 PAT 8650671
which is a CON of 12/786,904 05/25/2010 PAT 8104105
which is a CON of 10/958,797 10/05/2004 PAT 7743436
which is a CIP of 10/798,606 03/11/2004 PAT 6823889

**** FOREIGN APPLICATIONS ***************************

**** IF REQUIRED, FOREIGN FILING LICENSE GRANTED ****
02/07/2014

Foreign Priority claimed	☐ Yes ☑ No		STATE OR COUNTRY	SHEETS DRAWINGS	TOTAL CLAIMS	INDEPENDENT CLAIMS
35 USC 119(a-d) conditions met	☐ Yes ☐ No	☐ Met after Allowance				
Verified and Acknowledged	/TUAN N NGUYEN/ Examiner's Signature	Initials	IL	9	20	3

ADDRESS
THOMAS | HORSTEMEYER, LLP
400 INTERSTATE NORTH PARKWAY SE
SUITE 1500
ATLANTA, GA 30339
UNITED STATES

TITLE
Toilet Fill Valve

FILING FEE RECEIVED		
1740	FEES: Authority has been given in Paper No._____ to charge/credit DEPOSIT ACCOUNT No._____ for following:	☐ All Fees ☐ 1.16 Fees (Filing) ☐ 1.17 Fees (Processing Ext. of time) ☐ 1.18 Fees (Issue) ☐ Other _____ ☐ Credit

BIB (Rev. 05/07).

Search Notes	Application/Control No.	Applicant(s)/Patent Under Reexamination
	14164424	SCHUSTER ET AL.
	Examiner	**Art Unit**
	TUAN N NGUYEN	3754

CPC- SEARCHED		
Symbol	**Date**	**Examiner**
E03D 1/32	5/8/15	TN

CPC COMBINATION SETS - SEARCHED		
Symbol	**Date**	**Examiner**

US CLASSIFICATION SEARCHED			
Class	**Subclass**	**Date**	**Examiner**
4	331,324,366,415,675	7/2/12	TN
137	15.26,432,434,436,437,441-444	7/2/12	TN
285	91	7/2/12	TN
above updated		9/24/13	TN
above updated		5/8/15	TN

SEARCH NOTES		
Search Notes	**Date**	**Examiner**
EAST BRS TEXT SEARCH ATTACHED	5/1/151	TN

INTERFERENCE SEARCH			
US Class/ CPC Symbol	**US Subclass / CPC Group**	**Date**	**Examiner**
USPGPUB	INTERFERENCE TEXT SEARCH ATTACHED	5/1115/	TN

EAST Search History

EAST Search History (Prior Art)

Ref #	Hits	Search Query	DBs	Default Operator	Plurals	Time Stamp
L1	62	toilet and bowl and fill and valve and (connection coupling) and outlet and water and regulator	USPAT; EPO; JPO; DERWENT	OR	ON	2015/05/11 06:50

5/11/2015 6:51:27 AM
C:\Users\tnguyen25\Documents\EAST\Workspaces\14457697.wsp

Fluidmaster, Inc. - EX1008, Page 014
IPR2024-00634 (Fluidmaster Inc v. Danco Inc)

EAST Search History

EAST Search History (Interference)

Ref #	Hits	Search Query	DBs	Default Operator	Plurals	Time Stamp
L2	49	toilet and bowl and fill and valve and (connection coupling) and outlet and water and regulator	US-PGPUB; UPAD	OR	ON	2015/05/11 06:51

5/11/2015 6:51:20 AM
C:\Users\tnguyen25\Documents\EAST\Workspaces\14457697.wsp

Issue Classification	Application/Control No.	Applicant(s)/Patent Under Reexamination
	14164424	SCHUSTER ET AL.
	Examiner	**Art Unit**
	TUAN N NGUYEN	3754

CPC

Symbol					Type	Version
E03D		1	/	32	F	2013-01-01
			/			
			/			
			/			
			/			
			/			
			/			
			/			
			/			
			/			
			/			
			/			
			/			
			/			
			/			

CPC Combination Sets

Symbol					Type	Set	Ranking	Version
			/					
			/					

NONE (Assistant Examiner)	(Date)	**Total Claims Allowed:** 20	
/TUAN N NGUYEN/ Primary Examiner.Art Unit 3751 (Primary Examiner)	5/11/15 (Date)	O.G. Print Claim(s) 1	O.G. Print Figure 4 & 5B

U.S. Patent and Trademark Office

Part of Paper No. 20150511

Issue Classification	Application/Control No.	Applicant(s)/Patent Under Reexamination
	14164424	SCHUSTER ET AL.
	Examiner	**Art Unit**
	TUAN N NGUYEN	3754

US ORIGINAL CLASSIFICATION		INTERNATIONAL CLASSIFICATION	
CLASS	SUBCLASS	CLAIMED	NON-CLAIMED
4	415	E 0 3 D 1 / 00 (2006.01.01)	

CROSS REFERENCE(S)					
CLASS	SUBCLASS (ONE SUBCLASS PER BLOCK)				
4	324				
137	441				

NONE		Total Claims Allowed:	
(Assistant Examiner)	(Date)	20	
/TUAN N NGUYEN/ Primary Examiner.Art Unit 3751	5/11/15	O.G. Print Claim(s)	O.G. Print Figure
(Primary Examiner)	(Date)	1	4 & 5B

U.S. Patent and Trademark Office

Part of Paper No. 20150511

Issue Classification	Application/Control No.	Applicant(s)/Patent Under Reexamination
	14164424	SCHUSTER ET AL.
	Examiner	**Art Unit**
	TUAN N NGUYEN	3754

☒ Claims renumbered in the same order as presented by applicant ☐ CPA ☒ T.D. ☐ R.1.47

Final	Original	Final	Original	Final	Original	Final	Original	Final	Original	Final	Original	Final	Original	Final	Original

NONE (Assistant Examiner)	(Date)	**Total Claims Allowed:** 20	
/TUAN N NGUYEN/ Primary Examiner.Art Unit 3751 (Primary Examiner)	5/11/15 (Date)	O.G. Print Claim(s) 1	O.G. Print Figure 4 & 5B

U.S. Patent and Trademark Office

Part of Paper No. 20150511

Doc Code: DIST.E.FILE **Document Description: Electronic Terminal Disclaimer - Filed**	PTO/SB/25 PTO/SB/26 U.S. Patent and Trademark Office Department of Commerce

Electronic Petition Request	**TERMINAL DISCLAIMER TO OBVIATE A PROVISIONAL DOUBLE PATENTING REJECTION OVER A PENDING "REFERENCE" APPLICATION AND TERMINAL DISCLAIMER TO OBVIATE A DOUBLE PATENTING REJECTION OVER A "PRIOR" PATENT**
Application Number	14164424
Filing Date	27-Jan-2014
First Named Inventor	Michael Schuster
Attorney Docket Number	171401-1034
Title of Invention	Toilet Fill Valve

☒ Filing of terminal disclaimer does not obviate requirement for response under 37 CFR 1.111 to outstanding Office Action

☒ This electronic Terminal Disclaimer is not being used for a Joint Research Agreement.

Owner	Percent Interest
Danco, Inc.	100 %

The owner(s) of percent interest listed above in the instant application hereby disclaims, except as provided below, the terminal part of the statutory term of any patent granted on the instant application which would extend beyond the expiration date of the full statutory term of any patent granted on pending reference Application Number(s)

14457697 filed on 08/12/2014

as the term of any patent granted on said reference application may be shortened by any terminal disclaimer filed prior to the grant of any patent on the pending reference application. The owner hereby agrees that any patent so granted on the instant application shall be enforceable only for and during such period that it and any patent granted on the reference application are commonly owned. This agreement runs with any patent granted on the instant application and is binding upon the grantee, its successors or assigns.

In making the above disclaimer, the owner does not disclaim the terminal part of any patent granted on the instant application that would extend to the expiration date of the full statutory term of any patent granted on said reference application, "as the term of any patent granted on said reference application may be shortened by any terminal disclaimer filed prior to the grant of any patent on the pending reference application," in the event that any such patent granted on the pending reference application: expires for failure to pay a maintenance fee, is held unenforceable, is found invalid by a court of competent jurisdiction, is statutorily disclaimed in whole or terminally disclaimed under 37 CFR 1.321, has all claims canceled by a reexamination certificate, is reissued, or is in any manner terminated prior to the expiration of its full statutory term as shortened by any terminal disclaimer filed prior to its grant.

The owner(s) with percent interest listed above in the instant application hereby disclaims, except as provided below, the terminal part of the statutory term of any patent granted on the instant application which would extend beyond the expiration date of the full statutory term of prior patent number(s)

8104105

as the term of said prior patent is presently shortened by any terminal disclaimer. The owner hereby agrees that any patent so granted on the instant application shall be enforceable only for and during such period that it and the prior patent are commonly owned. This agreement runs with any patent granted on the instant application and is binding upon the grantee, its successors or assigns.

In making the above disclaimer, the owner does not disclaim the terminal part of the term of any patent granted on the instant application that would extend to the expiration date of the full statutory term of the prior patent, "as the term of said prior patent is presently shortened by any terminal disclaimer," in the event that said prior patent later:
- expires for failure to pay a maintenance fee;
- is held unenforceable;
- is found invalid by a court of competent jurisdiction;
- is statutorily disclaimed in whole or terminally disclaimed under 37 CFR 1.321;
- has all claims canceled by a reexamination certificate;
- is reissued; or
- is in any manner terminated prior to the expiration of its full statutory term as presently shortened by any terminal disclaimer.

◉ Terminal disclaimer fee under 37 CFR 1.20(d) is included with Electronic Terminal Disclaimer request.

○ I certify, in accordance with 37 CFR 1.4(d)(4), that the terminal disclaimer fee under 37 CFR 1.20(d) required for this terminal disclaimer has already been paid in the above-identified application.

Applicants claims the following fee status:

○ Small Entity

○ Micro Entity

◉ Regular Undiscounted

I hereby declare that all statements made herein of my own knowledge are true and that all statements made on information and belief are believed to be true; and further that these statements were made with the knowledge that willful false statements and the like so made are punishable by fine or imprisonment, or both, under Section 1001 of Title 18 of the United States Code and that such willful false statements may jeopardize the validity of the application or any patent issued thereon.

THIS PORTION MUST BE COMPLETED BY THE SIGNATORY OR SIGNATORIES

I certify, in accordance with 37 CFR 1.4(d)(4) that I am:

◉ An attorney or agent registered to practice before the Patent and Trademark Office who is of record in this application

Registration Number 67224

○ A sole inventor

○ A joint inventor; I certify that I am authorized to sign this submission on behalf of all of the inventors as evidenced by the power of attorney in the application

○ A joint inventor; all of whom are signing this request

Signature	/Robert D. Gravois/
Name	Robert D. Gravois

*Statement under 37 CFR 3.73(b) is required if terminal disclaimer is signed by the assignee (owner).
Form PTO/SB/96 may be used for making this certification. See MPEP § 324.

Electronic Patent Application Fee Transmittal

Application Number:	14164424
Filing Date:	27-Jan-2014
Title of Invention:	Toilet Fill Valve
First Named Inventor/Applicant Name:	Michael J. Schuster
Filer:	Robert D. Gravois/Julie Campbell
Attorney Docket Number:	171401-1034

Filed as Large Entity

Filing Fees for Utility under 35 USC 111(a)

Description	Fee Code	Quantity	Amount	Sub-Total in USD($)
Basic Filing:				
Statutory or Terminal Disclaimer	1814	1	160	160
Pages:				
Claims:				
Miscellaneous-Filing:				
Petition:				
Patent-Appeals-and-Interference:				
Post-Allowance-and-Post-Issuance:				

Description	Fee Code	Quantity	Amount	Sub-Total in USD($)
Extension-of-Time:				
Miscellaneous:				
		Total in USD ($)		**160**

Doc Code: DISQ.E.FILE
Document Description: Electronic Terminal Disclaimer – Approved

Application No.: 14164424

Filing Date: 27-Jan-2014

Applicant/Patent under Reexamination: Schuster et al.

Electronic Terminal Disclaimer filed on April 29, 2015

☒ APPROVED

This patent is subject to a terminal disclaimer

☐ DISAPPROVED

Approved/Disapproved by: Electronic Terminal Disclaimer automatically approved by EFS-Web

U.S. Patent and Trademark Office

Electronic Acknowledgement Receipt	
EFS ID:	22206975
Application Number:	14164424
International Application Number:	
Confirmation Number:	2529
Title of Invention:	Toilet Fill Valve
First Named Inventor/Applicant Name:	Michael J. Schuster
Customer Number:	24504
Filer:	Robert D. Gravois/Julie Campbell
Filer Authorized By:	Robert D. Gravois
Attorney Docket Number:	171401-1034
Receipt Date:	29-APR-2015
Filing Date:	27-JAN-2014
Time Stamp:	16:33:42
Application Type:	Utility under 35 USC 111(a)

Payment information:

Submitted with Payment	yes
Payment Type	Credit Card
Payment was successfully received in RAM	$160
RAM confirmation Number	3550
Deposit Account	
Authorized User	
The Director of the USPTO is hereby authorized to charge indicated fees and credit any overpayment as follows:	

File Listing:

Document Number	Document Description	File Name	File Size(Bytes)/ Message Digest	Multi Part /.zip	Pages (if appl.)
1	Electronic Terminal Disclaimer-Filed	eTerminal-Disclaimer.pdf	35921 7be060410b0242e82e48f663553ad0ebd319bbdf	no	3
Warnings:					
Information:					
2	Fee Worksheet (SB06)	fee-info.pdf	30037 419efea05bf9841ad9b6aff7658a65d972aaab8b	no	2
Warnings:					
Information:					
		Total Files Size (in bytes):	65958		

This Acknowledgement Receipt evidences receipt on the noted date by the USPTO of the indicated documents, characterized by the applicant, and including page counts, where applicable. It serves as evidence of receipt similar to a Post Card, as described in MPEP 503.

New Applications Under 35 U.S.C. 111
If a new application is being filed and the application includes the necessary components for a filing date (see 37 CFR 1.53(b)-(d) and MPEP 506), a Filing Receipt (37 CFR 1.54) will be issued in due course and the date shown on this Acknowledgement Receipt will establish the filing date of the application.

National Stage of an International Application under 35 U.S.C. 371
If a timely submission to enter the national stage of an international application is compliant with the conditions of 35 U.S.C. 371 and other applicable requirements a Form PCT/DO/EO/903 indicating acceptance of the application as a national stage submission under 35 U.S.C. 371 will be issued in addition to the Filing Receipt, in due course.

New International Application Filed with the USPTO as a Receiving Office
If a new international application is being filed and the international application includes the necessary components for an international filing date (see PCT Article 11 and MPEP 1810), a Notification of the International Application Number and of the International Filing Date (Form PCT/RO/105) will be issued in due course, subject to prescriptions concerning national security, and the date shown on this Acknowledgement Receipt will establish the international filing date of the application.

IN THE UNITED STATES PATENT AND TRADEMARK OFFICE

In re the application of:	Confirmation: 2529
Schuster *et al.*	Art Unit: 3751
Application Number: 14/164,424	Examiner: Nguyen, Tuan N.
Filing Date: 01/27/2014	Docket No.: 171401-1034

Title: **TOILET FILL VALVE**

RESPONSE TO NON-FINAL OFFICE ACTION DATED JANUARY 12, 2015

Mail Stop: Amendment
Commissioner for Patents
P.O. Box 1450
Alexandria, VA 22313-1450

Sir:

With respect to the outstanding non-final Office Action dated January 12, 2015 ("the Office Action"), the following Response is submitted.

It is believed that no extensions of time or fees for net addition of claims are required beyond those that may otherwise be provided for in documents accompanying this paper. However, if additional extensions of time are necessary to prevent abandonment of this application, then such extensions of time are hereby petitioned under 37 C.F.R. § 1.136(a), and any fees required therefor (including, but not limited to, fees for net addition of claims) are hereby authorized to be charged to Deposit Account No. 20-0778.

AMENDMENTS

IN THE CLAIMS:

Please amend the claims as indicated below. The language being added is underlined ("__"), and the language being deleted contains strikethrough ("—") or is enclosed by double brackets ("[[ ]]").

1. (Currently Amended) A system, comprising:

a toilet fill valve that comprises:

a body comprising an extended portion, wherein the extended portion is integrally molded with the body, wherein the extended portion forms a bowl fill outlet port;

a water inlet configured to receive water from a water source; and

a tank water outlet configured to provide a first portion of the water to a toilet tank during at least a portion of a flush cycle;

a water flow regulator ~~a bowl fill restriction~~ configured to attach directly to the extended portion of the body, wherein a portion of the water flow regulator is configured to insert into, and come into contact with, the extended portion of the body, wherein the water flow regulator ~~bowl fill restriction~~ is configured to receive a second portion of the water from the bowl fill outlet port during at least a portion of the flush cycle, wherein the water flow regulator ~~restriction~~ is configured to constrict a flow rate of the second portion of the water that flows through the water flow regulator; ~~restriction;~~ and

a tube that is configured to attach directly to the water flow regulator, ~~bowl~~

~~fill restriction,~~ wherein the tube is configured to direct the second portion of the water from the water flow regulator ~~bowl fill restriction~~ directly to a toilet tank overflow tube.

2. (Original) The system of claim 1, wherein the extended portion of the body extends radially from a longitudinal axis of the toilet fill valve.

3. (Cancelled)

4. (Currently Amended) The system of claim 1, wherein the water flow regulator ~~bowl fill restriction~~ is configured to be clamped to the toilet fill valve. ~~the extended portion of the body.~~

5. (Currently Amended) The system of claim 1, wherein the water flow regulator ~~bowl fill restriction~~ is configured to be snapped onto the toilet fill valve. ~~extended portion of the body~~.

6. (Currently Amended) The system of claim 1, wherein the toilet fill valve further comprises:

a float; and

an actuating arm coupled to the float, wherein the actuating arm extends radially ~~in an orthogonal direction~~ relative to a longitudinal axis of the toilet fill valve, wherein the actuating arm is angularly offset relative to the bowl fill valve, thereby preventing an interference with the water flow regulator ~~bowl fill restriction~~ and a translational stem that extends from the float to a free end of the actuating arm.

7. (Currently Amended) The system of claim 1, wherein the water flow regulator ~~bowl fill restriction~~ further comprises a nipple that is configured to insert into the tube.

8. (Currently Amended) The system of claim 1, wherein the water flow regulator ~~bowl fill restriction~~ prevents a pressure head from being formed in the tube.

9. (Currently Amended) A method, comprising:

receiving, via a water inlet of a toilet fill valve, water from a water supply;

providing, via a tank water outlet of the toilet fill valve, a first portion of the water to a toilet tank;

providing, via a bowl fill outlet port of the toilet fill valve, a second portion of the water to a water flow regulator, ~~bowl fill restriction,~~ wherein an extended portion of the toilet fill valve forms the bowl fill outlet port, wherein the extended portion is integrally molded with the toilet fill valve, wherein the water flow regulator ~~bowl fill restriction~~ is in ~~direct~~ contact with the extended portion of the toilet fill valve, wherein a portion of the water flow regulator inserts into the extended portion of the toilet fill valve and comes into contact with the extended portion of the toilet fill valve;

restricting, using the water flow regulator, ~~bowl fill restriction,~~ a flow of the second portion of the water;

providing, via the water flow regulator, ~~bowl fill restriction,~~ the second portion of the water to a tube that is in ~~direct~~ contact with the water flow regulator; ~~bowl fill restriction;~~ and

providing, via the tube, the second portion of the water to a toilet tank overfill tube.

10. (Currently Amended) The method of claim 9, wherein the water flow regulator ~~bowl fill restriction~~ prevents a pressure head from being formed in the tube.

11. (Original) The method of claim 9, further comprising terminating, using the toilet fill valve, the flow of the second portion of the water so that a water level in a toilet bowl is at a predefined level.

12. (Currently Amended) The method of claim 11, wherein the water level is determined at least in part by the water flow regulator. ~~bowl fill restriction.~~

13. (Original) The method of claim 9, wherein the extended portion of the toilet fill valve is a portion of a body of the toilet fill valve.

14. (Original) The method of claim 9, wherein the extended portion of the toilet fill valve extends radially from a longitudinal axis of the toilet fill valve.

15. (Currently Amended) A method, comprising:

inserting a portion of a water flow regulator ~~attaching a bowl fill restriction directly~~ into [[to]] an extended portion of a body of a toilet fill valve, the portion of the water flow regulator coming into contact with the extended portion of the body of the toilet fill valve, wherein the extended portion is integrally molded with the body, wherein the extended portion forms a bowl fill outlet port, wherein the water flow regulator ~~bowl fill restriction~~ is configured to constrict a flow rate of water that flows out of the bowl fill outlet port; and

attaching a tube directly to the water flow regulator, ~~bowl fill restriction,~~ wherein the tube is configured to direct the water from the water flow regulator ~~restriction~~ directly to a toilet tank overflow tube.

16. (Currently Amended) The method of claim 15, further comprising preventing the water flow regulator ~~bowl fill restriction~~ from detaching from the extended portion of the body.

17. (Currently Amended) The method of claim 16, wherein preventing the water flow regulator ~~bowl fill restriction~~ from detaching from the extended portion further comprises clamping the water flow regulator ~~bowl fill restriction~~ to the extended portion.

18. (Currently Amended) The method of claim 16, wherein preventing the water flow regulator ~~bowl fill restriction~~ from detaching from the extended portion further comprises snapping the bowl fill restriction to the extended portion.

19. (Currently Amended) The method of claim 16, wherein preventing the water flow regulator ~~bowl fill restriction~~ from detaching from the extended portion further comprises rotating the water flow regulator relative ~~bowl fill restriction with respect~~ to the extended portion.

20. (Cancelled)

21. (New) The system of claim 1, wherein the water flow regulator comprises an adjustable water flow regulator that is configured to adjust the flow rate of the second portion of the water based at least in part on a setting of the adjustable water flow regulator.

22. (New) The method of claim 15, wherein the water flow regulator comprises an adjustable water flow regulator that is configured to adjust the flow rate of the water based at least in part on a setting of the adjustable water flow regulator.

REMARKS

As of entry of this Response, claims 1, 2, 4-19, 21, and 22 remain pending in the present application, with claims 1, 9, and 15 being independent. Claims 1, 4-10, 12, and 15-19 are currently amended, and claims 3 and 20 are cancelled without prejudice or waiver. Claims 21 and 22 are newly added. Reconsideration and allowance of the pending application and claims are respectfully requested.

I. Claims 4 and 17 Comply with the Written Description Requirement of 35 U.S.C. § 112

Page 2 of the Office Action indicates that claims 4 and 17 have been rejected under 35 U.S.C. § 112, first paragraph, as allegedly failing to comply with the written description requirement. To satisfy the written description requirement of 35 U.S.C. § 112, first paragraph, the specification must describe the claimed invention so that one skilled in the art can reasonably conclude that the inventor had possession of the claimed invention. *Moba, B.V. v. Diamond Automation, Inc.*, 352 F.3d 1306, 1319 (Fed. Cir. 2003); *See also*, *Vas-Cath, Inc. v. Mahurkar*, 935 F.2d at 1563. Applicants respectfully request that the rejections of claims 4 and 17 be withdrawn for at least the following reasons.

Claim 4, as amended, recites, “wherein the water flow regulator is configured to be clamped to the toilet fill valve,” and claim 17, as amended, recites, “wherein preventing the water flow regulator from detaching from the extended portion further comprises clamping the bowl fill restriction to the extended portion.” Page 2 of the Office Action alleges:

> [The] original disclosure fails to support the limitation "the bowl fill restriction is configured to be clamped to the extended portion of the body" of claim 4 and the method of "clamping the bowl fill restriction to the extended portion" of claim 17. These are considered as new matter.

Applicants respectfully disagree. Paragraph [0014] of the specification of states, "the bowl fill valve 109 may be molded as a portion of the toilet fill valve 100 or *it may be snapped* <u>*or clamped*</u> *into place*, or it may be attached to the toilet fill valve 100 in some other manner, etc." (*emphasis added*). Thus, at least this portion of the specification describes a toilet fill valve, which is one example (among others) of a water flow regulator, as being clamped into place. Accordingly, one of skill in the art would conclude that Applicants had possession of the limitations recited in claims 4 and 17. For at least this reason, claims 4 and 17 comply with the written description requirement of 35 U.S.C. § 112, first paragraph, and Applicants respectfully request that these rejections of claims 4 and 17 be withdrawn.

II. Claims 4 and 17 Are Definite

Page 3 of the Office Action indicates that claims 4 and 17 have been rejected under 35 U.S.C. § 112, second paragraph, as allegedly being indefinite for failing to particularly point out and distinctly claim the subject matter that Applicants regard as the invention. "Determining whether a claim is definite requires an analysis of whether one skilled in the art would understand the bounds of the claim when read in light of the specification. If the claims read in light of the specification reasonably apprise those skilled in the art of the scope of the invention, § 112 demands no more." *Personalized Media Commun's, LLC v. ITC*, 161 F.3d 696, 7-5 (Fed. Cir. 1998) (internal quotation marks omitted). Applicants respectfully request that the rejections of claims 4 and 17

under 35 U.S.C. § 112, second paragraph, be withdrawn for at least the following reasons.

Claim 4, as amended, recites, ""wherein the water flow regulator is configured to be clamped to the toilet fill valve," and claim 17, as amended, recites, "wherein preventing the water flow regulator from detaching from the extended portion further comprises clamping the water flow regulator to the extended portion." Page 3 of the Office Action alleges, "[i]t is unclear as to what structure is being claimed." However, the Office Action provides no explanation as to why the claims are allegedly unclear. For an indefiniteness rejection under 35 U.S.C. § 112, MPEP § 2173 requires that "such rejections must clearly identify the language that causes the claim to be indefinite and thoroughly explain the reasoning for the rejection." However, the Office Action does not identify any allegedly unclear language, nor does the Office Action explain the reasoning for the rejection. Therefore, this rejection does not comply with the requirements imposed by the MPEP. Applicants respectfully submit that a person of skill in the art would understand the bounds of claims 4 and 17 and that these claims are definite under 35 U.S.C. § 112. Accordingly, Applicants respectfully request that these rejections be withdrawn.

I. Claims 1, 2, and 4-19 Are Patentable over *Gish* and *DeMarco*

Page 3 of the Office Action indicates that claims 1-20 have been rejected under 35 U.S.C. § 103(a) as allegedly being unpatentable over US Patent 5,708,991, issued to DeMarco ("*DeMarco*") and US Patent 6,047,725, issued to Gish ("*Gish*"). Claims 3

and 20 have been cancelled through this Response, thereby rendering the rejections of claims 3 and 20 moot.

In order to establish a *prima facie* case of obviousness under 35 U.S.C. § 103, the Examiner must show that each and every element of the claim is described or suggested by the prior art or would have been obvious in view of the prior art. *See In re Fine*, 837 F.2d 1071, 1073-1074 (Fed. Cir. 1988); *Ex Parte Wada and Murphy*, Appeal 2007-3733 (BPAI 2008); *See also, KSR Int'l v. Teleflex, Inc.*, 550 U.S. 398, 411 (2007) (claim deemed obvious to one of ordinary skill where all claim elements were disclosed in the cited prior art references). In addition, "[r]ejections on obviousness grounds cannot be sustained by mere conclusory statements; instead, there must be some articulated reasoning with some rational underpinning to support the legal conclusion of obviousness." *KSR Int'l*, 550 U.S. at 418 (quoting *In re Kahn*, 441 F.3d 977, 988 (Fed. Cir. 2006)). Applicants respectfully request that the rejections of claims 1, 2, and 4-19 be withdrawn for at least the following reasons.

A. Claims 1, 2, and 4, and 6-8 Are Patentable over *DeMarco* and *Gish*

Independent claim 1, as amended, recites:

> 1. A system, comprising:
>
> ...
>
> ... wherein a portion of the water flow regulator is configured to insert into, and come into contact with, the extended portion of the body ... ;
>
> ... .

Applicants respectfully submit that the cited references, individually and in combination, fail to disclose or render obvious at least the elements of claim 1 that are recited above.

To reject claims 1, page 4 of the Office Action provides the following annotation of FIG. 1 of *DeMarco*:

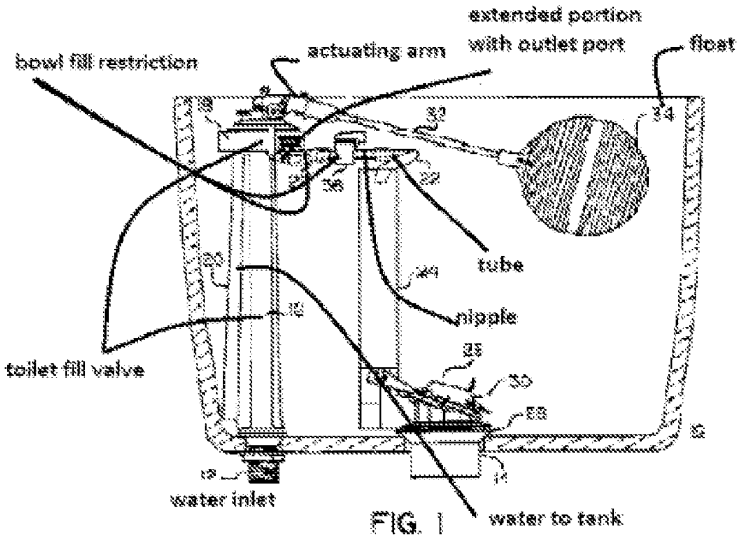

The Office Action appears to allege that the valve 36 and the left segment of the reseal hose 22 in FIG. 1 of *DeMarco* correspond to "a bowl fill restriction." The Office Action also appears to allege that a portion of the water control assembly 18 in FIG. 1 of *DeMarco* corresponds to the claim element of "an extended portion [of the body of the toilet fill valve]." A portion of FIG. 1 of *DeMarco* is provided below:

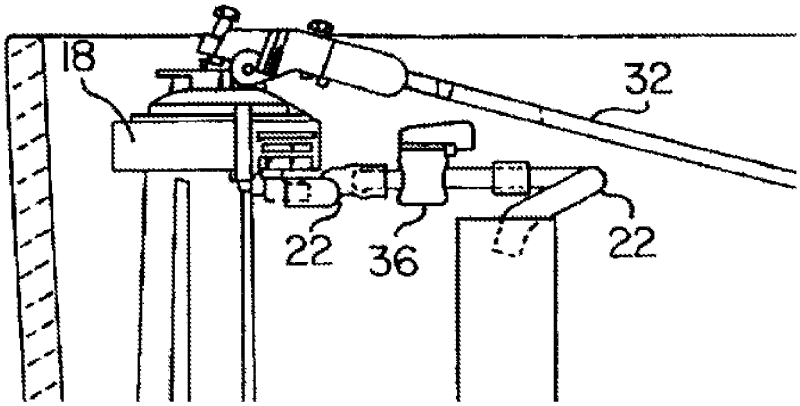

As can be seen in FIG. 1 of *DeMarco*, the left segment of the reseal tube 22 is *slid over* a portion of the water control assembly 18. However, claim 1, as amended, recites, "a portion of the water flow regulator is configured *to insert into, and come into contact with,* the extended portion of the body" (*emphasis added*). There is no portion of the reseal tube 22 or the valve 36 in *DeMarco* that "insert[s] into, and come[s] into contact with, the extended portion of the body," as required by the claim. Instead, the reseal tube 22 merely slides over a portion of the water control assembly 18. Thus, *DeMarco* fails to disclose or render obvious this claim element.

Gish does not cure the deficiencies of the rejection of claim 1 in view of *DeMarco*, nor does the Office Action rely on *Gish* to address the claim elements that are discussed above. Accordingly, the combination of the cited references fails to disclose or render obvious all of the elements of independent claim 1. For at least this reason, Applicants respectfully request that the rejection of claim 1 be withdrawn. In addition, Applicants respectfully request that the rejections of claims 1, 2, 4, and 6-8 be withdrawn as depending from claim 1. Applicants notes that claims 1, 2, 4, and 6-8 may also be patentable for the respective claim elements that they recite.

B. Claim 5 Is Patentable over *DeMarco* and *Gish*

First, Applicants respectfully request that the rejection of claim 5 be withdrawn as depending from claim 1 for at least the reasons set forth above. In addition, Applicants respectfully submit that the cited references, individually and in combination, fail to disclose or render obvious the elements of claim 5 that are recited below:

> 5. The system of claim 1, wherein the water flow regulator is configured to be snapped onto the toilet fill valve.

To reject claim 5, the Office Action provides the annotation of FIG. 1 of *DeMarco* that is produced above.

As discussed above, FIG. 1 of *DeMarco* shows that the left segment of the reseal tube 22 *slides over* a portion of the water control assembly 18. By contrast, claim 5 recites that "the water flow regulator is configured *to be snapped onto* the toilet fill valve." Because the reseal tube 22 slides over a portion of the water control assembly 18, *DeMarco* fails to disclose or render obvious this claim element.

Gish does not cure the deficiencies of the rejection of claim 5 in view of *DeMarco*, nor does the Office Action rely on *Gish* to address the claim elements that are discussed above. Accordingly, the combination of the cited references fails to disclose or render obvious all of the elements of claim 5. For at least this additional reason, Applicants respectfully request that the rejection of claim 5 be withdrawn.

C. Claims 9-14 Are Patentable over *DeMarco* and *Gish*

Independent claim 9, as amended, recites:

> 9. A method, comprising:
>
> ...
>
> ... wherein the water flow regulator is in contact with the extended portion of the toilet fill valve, wherein a portion of the water flow regulator inserts into the extended portion of the toilet fill valve and comes into contact with the extended portion of the toilet fill valve;
>
> ... .

Applicants respectfully submit that the cited references, individually and in combination, fail to disclose or render obvious at least the elements of claim 9 that are recited above.

The elements of claim 9 that are recited above are similar to elements that are discussed above with respect to claim 1. Accordingly, Applicants respectfully submit

that the cited references fail to disclose or render obvious these elements of claim 9 for reasons that are similar to those discussed above with respect to claim 1, to the extent applicable.

For at least this reason, Applicants respectfully request that the rejection of independent claim 9 be withdrawn. In addition, Applicants respectfully request that the rejections of claims 10-14 be withdrawn as depending from claim 9. Applicants note that claims 10-14 may also be patentable for the elements that they recite.

D. Claims 15-19 Are Patentable over *DeMarco* and *Gish*

Independent claim 15, as amended, recites:

> 15. A method, comprising:
> inserting a portion of a water flow regulator into an extended portion of a body of a toilet fill valve, the portion of the water flow regulator coming into contact with the extended portion of the body of the toilet fill valve ... ;
> ... .

Applicants respectfully submit that the cited references, individually and in combination, fail to disclose or render obvious at least the elements of claim 15 that are recited above.

The elements of claim 15 that are recited above are similar to elements that are discussed above with respect to claim 1. Accordingly, Applicants respectfully submit that the cited references fail to disclose or render obvious these elements of claim 15 for reasons that are similar to those discussed above with respect to claim 1, to the extent applicable.

For at least this reason, Applicants respectfully request that the rejection of independent claim 15 be withdrawn. In addition, Applicants respectfully request that the

rejections of claims 16-19 be withdrawn as depending from claim 15. Applicants note that claims 16-19 may also be patentable for the elements that they recite.

II. Request for Double Patenting Rejections To Be Held in Abeyance

Page 5 of the Office Action indicates that claims 1-20 have been *provisionally* rejected as claiming the same invention as that of claims 1-20 of Patent Application No. 14/457,697. Claims 3 and 20 have been cancelled through this Response, thereby rendering the rejections of claims 3 and 20 moot. In addition, Applicants respectfully submit that the current amendments to the claims overcome these rejections of claims 1, 2, and 4-19.

Page 7 of the Office Action indicates that claims 1, 2, and 6-14 have been rejected on the ground of nonstatutory obviousness-type double patenting as allegedly being unpatentable over claims 1-10 of U.S. Patent No. 6,823,889. Page 7 of the Office Action also indicates that claims 1-3, 6-16, 19, and 20 have been rejected on the ground of nonstatutory obviousness-type double patenting as allegedly being unpatentable over claim 1 of U.S. Patent No. 7,743,436. Page 7 of the Office Action also indicates that claims 1-3, 5-16, and 18-20 have been rejected on the ground of nonstatutory obviousness-type double patenting as allegedly being unpatentable over claim 1 of U.S. Patent No. 8,650,671. Claims 3 and 20 have been cancelled through this Response, thereby rendering the rejections of claims 3 and 20 moot. Applicants respectfully request that these rejections of claims 1, 2, and 6-14 be held in abeyance until they are the only rejections outstanding.

III. Claims 21-22 Are Newly Added

Claims 21-22 are newly added. No new matter has been entered into the application through these claims. Favorable consideration of claims 21-22 is respectfully requested.

IV. No Waiver

Applicants' arguments and amendments are without prejudice or disclaimer. Applicants have not addressed each specific rejection of the dependent claims because Applicants submit that the independent claims are allowable over the documents of record, as discussed above. Applicants have not acquiesced to any such rejection and reserve the right to address the patentability of any additional claim features in the future.

CONCLUSION

It is requested that all outstanding objections and rejections be withdrawn and that this application and all presently pending claims be allowed to issue. If the Examiner has any questions or comments regarding this Response, the Examiner is encouraged to telephone the undersigned attorney of Applicants.

Respectfully submitted,

/Robert D. Gravois/

Robert D. Gravois
Registration Number: 67,224

THOMAS | HORSTEMEYER, LLP
Customer Number 24504
(770) 933-9500

Electronic Acknowledgement Receipt

EFS ID:	22042750
Application Number:	14164424
International Application Number:	
Confirmation Number:	2529
Title of Invention:	Toilet Fill Valve
First Named Inventor/Applicant Name:	Michael J. Schuster
Customer Number:	24504
Filer:	Robert D. Gravois
Filer Authorized By:	
Attorney Docket Number:	171401-1034
Receipt Date:	13-APR-2015
Filing Date:	27-JAN-2014
Time Stamp:	16:13:22
Application Type:	Utility under 35 USC 111(a)

Payment information:

Submitted with Payment	no

File Listing:

Document Number	Document Description	File Name	File Size(Bytes)/ Message Digest	Multi Part /.zip	Pages (if appl.)
1	Amendment/Req. Reconsideration-After Non-Final Reject	02183698.PDF	159421 27b37f02a415bef0fdc0b49b490d18b846112bb9	no	18

Warnings:

Information:

Total Files Size (in bytes):	159421

This Acknowledgement Receipt evidences receipt on the noted date by the USPTO of the indicated documents, characterized by the applicant, and including page counts, where applicable. It serves as evidence of receipt similar to a Post Card, as described in MPEP 503.

New Applications Under 35 U.S.C. 111
If a new application is being filed and the application includes the necessary components for a filing date (see 37 CFR 1.53(b)-(d) and MPEP 506), a Filing Receipt (37 CFR 1.54) will be issued in due course and the date shown on this Acknowledgement Receipt will establish the filing date of the application.

National Stage of an International Application under 35 U.S.C. 371
If a timely submission to enter the national stage of an international application is compliant with the conditions of 35 U.S.C. 371 and other applicable requirements a Form PCT/DO/EO/903 indicating acceptance of the application as a national stage submission under 35 U.S.C. 371 will be issued in addition to the Filing Receipt, in due course.

New International Application Filed with the USPTO as a Receiving Office
If a new international application is being filed and the international application includes the necessary components for an international filing date (see PCT Article 11 and MPEP 1810), a Notification of the International Application Number and of the International Filing Date (Form PCT/RO/105) will be issued in due course, subject to prescriptions concerning national security, and the date shown on this Acknowledgement Receipt will establish the international filing date of the application.

PTO/SB/06 (09-11)
Approved for use through 1/31/2014. OMB 0651-0032
U.S. Patent and Trademark Office; U.S. DEPARTMENT OF COMMERCE
Under the Paperwork Reduction Act of 1995, no persons are required to respond to a collection of information unless it displays a valid OMB control number.

PATENT APPLICATION FEE DETERMINATION RECORD Substitute for Form PTO-875	Application or Docket Number 14/164,424	Filing Date 01/27/2014	☐ To be Mailed

ENTITY: ☒ LARGE ☐ SMALL ☐ MICRO

APPLICATION AS FILED – PART I

FOR	(Column 1) NUMBER FILED	(Column 2) NUMBER EXTRA	RATE ($)	FEE ($)
☐ BASIC FEE (37 CFR 1.16(a), (b), or (c))	N/A	N/A	N/A	
☐ SEARCH FEE (37 CFR 1.16(k), (i), or (m))	N/A	N/A	N/A	
☐ EXAMINATION FEE (37 CFR 1.16(o), (p), or (q))	N/A	N/A	N/A	
TOTAL CLAIMS (37 CFR 1.16(i))	minus 20 =	*	X $ =	
INDEPENDENT CLAIMS (37 CFR 1.16(h))	minus 3 =	*	X $ =	
☐ APPLICATION SIZE FEE (37 CFR 1.16(s))	If the specification and drawings exceed 100 sheets of paper, the application size fee due is $310 ($155 for small entity) for each additional 50 sheets or fraction thereof. See 35 U.S.C. 41(a)(1)(G) and 37 CFR 1.16(s).			
☐ MULTIPLE DEPENDENT CLAIM PRESENT (37 CFR 1.16(j))				
* If the difference in column 1 is less than zero, enter "0" in column 2.			TOTAL	

APPLICATION AS AMENDED – PART II

AMENDMENT **04/13/2015**

	(Column 1) CLAIMS REMAINING AFTER AMENDMENT		(Column 2) HIGHEST NUMBER PREVIOUSLY PAID FOR	(Column 3) PRESENT EXTRA	RATE ($)	ADDITIONAL FEE ($)
Total (37 CFR 1.16(i))	* 20	Minus	** 20	= 0	X $80 =	0
Independent (37 CFR 1.16(h))	* 3	Minus	***3	= 0	X $420 =	0
☐ Application Size Fee (37 CFR 1.16(s))						
☐ FIRST PRESENTATION OF MULTIPLE DEPENDENT CLAIM (37 CFR 1.16(j))						
					TOTAL ADD'L FEE	**0**

AMENDMENT

	(Column 1) CLAIMS REMAINING AFTER AMENDMENT		(Column 2) HIGHEST NUMBER PREVIOUSLY PAID FOR	(Column 3) PRESENT EXTRA	RATE ($)	ADDITIONAL FEE ($)
Total (37 CFR 1.16(i))	*	Minus	**	=	X $ =	
Independent (37 CFR 1.16(h))	*	Minus	***	=	X $ =	
☐ Application Size Fee (37 CFR 1.16(s))						
☐ FIRST PRESENTATION OF MULTIPLE DEPENDENT CLAIM (37 CFR 1.16(j))						
					TOTAL ADD'L FEE	

* If the entry in column 1 is less than the entry in column 2, write "0" in column 3.
** If the "Highest Number Previously Paid For" IN THIS SPACE is less than 20, enter "20".
*** If the "Highest Number Previously Paid For" IN THIS SPACE is less than 3, enter "3".
The "Highest Number Previously Paid For" (Total or Independent) is the highest number found in the appropriate box in column 1.

LIE
/CORALIA BETANCOURT/

This collection of information is required by 37 CFR 1.16. The information is required to obtain or retain a benefit by the public which is to file (and by the USPTO to process) an application. Confidentiality is governed by 35 U.S.C. 122 and 37 CFR 1.14. This collection is estimated to take 12 minutes to complete, including gathering, preparing, and submitting the completed application form to the USPTO. Time will vary depending upon the individual case. Any comments on the amount of time you require to complete this form and/or suggestions for reducing this burden, should be sent to the Chief Information Officer, U.S. Patent and Trademark Office, U.S. Department of Commerce, P.O. Box 1450, Alexandria, VA 22313-1450. DO NOT SEND FEES OR COMPLETED FORMS TO THIS ADDRESS. **SEND TO: Commissioner for Patents, P.O. Box 1450, Alexandria, VA 22313-1450.**
If you need assistance in completing the form, call 1-800-PTO-9199 and select option 2.

UNITED STATES PATENT AND TRADEMARK OFFICE

UNITED STATES DEPARTMENT OF COMMERCE
United States Patent and Trademark Office
Address: COMMISSIONER FOR PATENTS
P.O. Box 1450
Alexandria, Virginia 22313-1450
www.uspto.gov

APPLICATION NO.	FILING DATE	FIRST NAMED INVENTOR	ATTORNEY DOCKET NO.	CONFIRMATION NO.
14/164,424	01/27/2014	Michael J. Schuster	171401-1034	2529

24504 7590 01/12/2015
THOMAS | HORSTEMEYER, LLP
400 INTERSTATE NORTH PARKWAY SE
SUITE 1500
ATLANTA, GA 30339

EXAMINER
NGUYEN, TUAN N

ART UNIT	PAPER NUMBER
3751	

NOTIFICATION DATE	DELIVERY MODE
01/12/2015	ELECTRONIC

Please find below and/or attached an Office communication concerning this application or proceeding.

The time period for reply, if any, is set in the attached communication.

Notice of the Office communication was sent electronically on above-indicated "Notification Date" to the following e-mail address(es):

uspatents@tkhr.com
kristen.layton@tkhr.com
ozzie.liggins@tkhr.com

PTOL-90A (Rev. 04/07)

Office Action Summary	Application No. 14/164,424	Applicant(s) SCHUSTER ET AL.	
	Examiner TUAN N. NGUYEN	Art Unit 3751	AIA (First Inventor to File) Status No

-- The MAILING DATE of this communication appears on the cover sheet with the correspondence address --

Period for Reply

A SHORTENED STATUTORY PERIOD FOR REPLY IS SET TO EXPIRE 3 MONTHS FROM THE MAILING DATE OF THIS COMMUNICATION.

- Extensions of time may be available under the provisions of 37 CFR 1.136(a). In no event, however, may a reply be timely filed after SIX (6) MONTHS from the mailing date of this communication.
- If NO period for reply is specified above, the maximum statutory period will apply and will expire SIX (6) MONTHS from the mailing date of this communication.
- Failure to reply within the set or extended period for reply will, by statute, cause the application to become ABANDONED (35 U.S.C. § 133). Any reply received by the Office later than three months after the mailing date of this communication, even if timely filed, may reduce any earned patent term adjustment. See 37 CFR 1.704(b).

Status

1)☒ Responsive to communication(s) filed on 1/27/14.

☐ A declaration(s)/affidavit(s) under **37 CFR 1.130(b)** was/were filed on _____.

2a)☐ This action is **FINAL**. 2b)☒ This action is non-final.

3)☐ An election was made by the applicant in response to a restriction requirement set forth during the interview on _____; the restriction requirement and election have been incorporated into this action.

4)☐ Since this application is in condition for allowance except for formal matters, prosecution as to the merits is closed in accordance with the practice under *Ex parte Quayle*, 1935 C.D. 11, 453 O.G. 213.

Disposition of Claims*

5)☒ Claim(s) 1-20 is/are pending in the application.

5a) Of the above claim(s) _____ is/are withdrawn from consideration.

6)☐ Claim(s) _____ is/are allowed.

7)☒ Claim(s) 1-20 is/are rejected.

8)☐ Claim(s) _____ is/are objected to.

9)☐ Claim(s) _____ are subject to restriction and/or election requirement.

* If any claims have been determined allowable, you may be eligible to benefit from the **Patent Prosecution Highway** program at a participating intellectual property office for the corresponding application. For more information, please see http://www.uspto.gov/patents/init_events/pph/index.jsp or send an inquiry to PPHfeedback@uspto.gov.

Application Papers

10)☐ The specification is objected to by the Examiner.

11)☐ The drawing(s) filed on _____ is/are: a)☐ accepted or b)☐ objected to by the Examiner.

Applicant may not request that any objection to the drawing(s) be held in abeyance. See 37 CFR 1.85(a).

Replacement drawing sheet(s) including the correction is required if the drawing(s) is objected to. See 37 CFR 1.121(d).

Priority under 35 U.S.C. § 119

12)☐ Acknowledgment is made of a claim for foreign priority under 35 U.S.C. § 119(a)-(d) or (f).

Certified copies:

a)☐ All b)☐ Some** c)☐ None of the:

1.☐ Certified copies of the priority documents have been received.

2.☐ Certified copies of the priority documents have been received in Application No. _____.

3.☐ Copies of the certified copies of the priority documents have been received in this National Stage application from the International Bureau (PCT Rule 17.2(a)).

** See the attached detailed Office action for a list of the certified copies not received.

Attachment(s)

1) ☒ Notice of References Cited (PTO-892)

2) ☒ Information Disclosure Statement(s) (PTO/SB/08a and/or PTO/SB/08b) Paper No(s)/Mail Date 1/27/14.

3) ☐ Interview Summary (PTO-413) Paper No(s)/Mail Date. _____ .

4) ☐ Other: _____.

Fluidmaster, Inc. - EX1008, Page 049
IPR2024-00634 (Fluidmaster Inc v. Danco Inc)

The present application is being examined under the pre-AIA first to invent provisions.

DETAILED ACTION

Claim Rejections - 35 USC § 112

The following is a quotation of the first paragraph of 35 U.S.C. 112(a):

> (a) IN GENERAL.—The specification shall contain a written description of the invention, and of the manner and process of making and using it, in such full, clear, concise, and exact terms as to enable any person skilled in the art to which it pertains, or with which it is most nearly connected, to make and use the same, and shall set forth the best mode contemplated by the inventor or joint inventor of carrying out the invention.

The following is a quotation of the first paragraph of pre-AIA 35 U.S.C. 112:

> The specification shall contain a written description of the invention, and of the manner and process of making and using it, in such full, clear, concise, and exact terms as to enable any person skilled in the art to which it pertains, or with which it is most nearly connected, to make and use the same, and shall set forth the best mode contemplated by the inventor of carrying out his invention.

Claims 4 and 17 are rejected under 35 U.S.C. 112(a) or 35 U.S.C. 112 (pre-AIA), first paragraph, as failing to comply with the written description requirement. The claim(s) contains subject matter which was not described in the specification in such a way as to reasonably convey to one skilled in the relevant art that the inventor or a joint inventor, or for pre-AIA the inventor(s), at the time the application was filed, had possession of the claimed invention. There original disclosure fails to support the limitation “the bowl fill restriction is configured to be clamped to the extended portion of the body” of claim 4 and the method of “clamping the bowl fill restriction to the extended portion” of claim 17. These are considered as new matter.

The following is a quotation of 35 U.S.C. 112(b):

> (b) CONCLUSION.—The specification shall conclude with one or more claims particularly pointing out and distinctly claiming the subject matter which the inventor or a joint inventor regards as the invention.

The following is a quotation of 35 U.S.C. 112 (pre-AIA), second paragraph:

> The specification shall conclude with one or more claims particularly pointing out and distinctly claiming the subject matter which the applicant regards as his invention.

Claims 4 and 17 are rejected under 35 U.S.C. 112(b) or 35 U.S.C. 112 (pre-AIA), second paragraph, as being indefinite for failing to particularly point out and distinctly claim the subject matter which the inventor or a joint inventor, or for pre-AIA the applicant regards as the invention. It is unclear as to what structure is being claimed. The claims are being examined as best understood.

Claim Rejections - 35 USC § 103

The following is a quotation of pre-AIA 35 U.S.C. 103(a) which forms the basis for all obviousness rejections set forth in this Office action:

> (a) A patent may not be obtained though the invention is not identically disclosed or described as set forth in section 102 of this title, if the differences between the subject matter sought to be patented and the prior art are such that the subject matter as a whole would have been obvious at the time the invention was made to a person having ordinary skill in the art to which said subject matter pertains. Patentability shall not be negatived by the manner in which the invention was made.

Claims 1-20 are rejected under pre-AIA 35 U.S.C. 103(a) as being unpatentable over US 5,708,991 (hereinafter DeMarco) in view of US 6,047,725 (hereinafter Gish).

DeMarco teaches the claimed limitations as shown below.

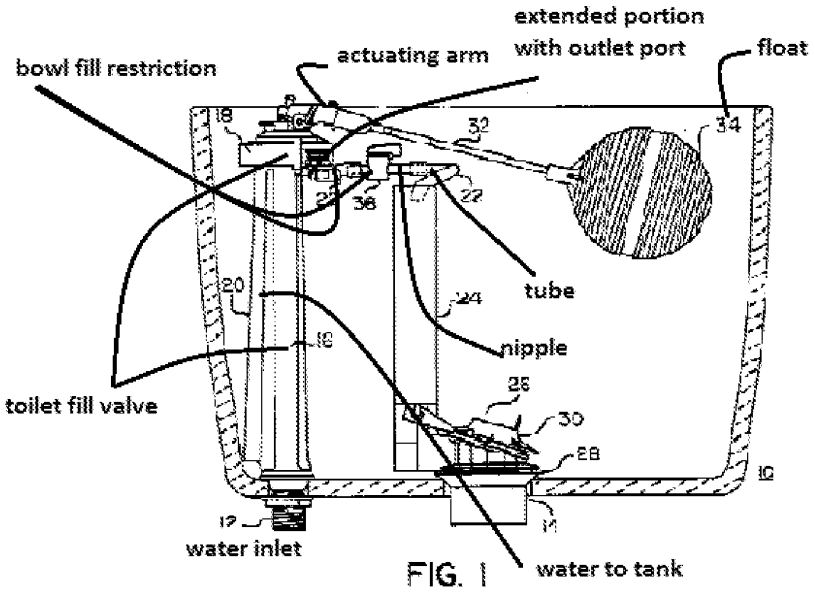

FIG. 1

Although DeMarco remain silent as to the extended portion is integrally molded with the body of the toilet fill valve, attention is directed to the Gish reference which teaches an analogous toilet fill valve system where the extended portion 224 is integrally molded with the toilet fill valve (see Fig. 12 and col. 4, line 19+). Therefore, it would have been obvious to one of ordinary skill in the art to apply a known technique as taught by Gish to a known device of DeMarco as a cost effective method of manufacturing. In so doing, the method as claimed would have been obvious to one of ordinary skill in the art.

Double Patenting

Claims 1-20 of this application is patentably indistinct from claims 1-20 of Application No. 14/457,697. Pursuant to 37 CFR 1.78(f) or pre-AIA 37 CFR 1.78(b), when two or more applications filed by the same applicant contain patentably indistinct claims, elimination of such claims from all but one application may be required in the

absence of good and sufficient reason for their retention during pendency in more than one application. Applicant is required to either cancel the patentably indistinct claims from all but one application or maintain a clear line of demarcation between the applications. See MPEP § 822.

A rejection based on double patenting of the "same invention" type finds its support in the language of 35 U.S.C. 101 which states that "whoever invents or discovers any new and useful process... may obtain a patent therefor..." (Emphasis added). Thus, the term "same invention," in this context, means an invention drawn to identical subject matter. See *Miller v. Eagle Mfg. Co.*, 151 U.S. 186 (1894); *In re Vogel*, 422 F.2d 438, 164 USPQ 619 (CCPA 1970); and *In re Ockert*, 245 F.2d 467, 114 USPQ 330 (CCPA 1957).

A statutory type (35 U.S.C. 101) double patenting rejection can be overcome by canceling or amending the claims that are directed to the same invention so they are no longer coextensive in scope. The filing of a terminal disclaimer cannot overcome a double patenting rejection based upon 35 U.S.C. 101.

Claims 1-20 provisionally rejected under 35 U.S.C. 101 as claiming the same invention as that of claims 1-20 of copending Application No. 14/457,697. This is a provisional statutory double patenting rejection since the claims directed to the same invention have not in fact been patented.

The nonstatutory double patenting rejection is based on a judicially created doctrine grounded in public policy (a policy reflected in the statute) so as to prevent the unjustified or improper timewise extension of the "right to exclude" granted by a patent

and to prevent possible harassment by multiple assignees. A nonstatutory double patenting rejection is appropriate where the claims at issue are not identical, but at least one examined application claim is not patentably distinct from the reference claim(s) because the examined application claim is either anticipated by, or would have been obvious over, the reference claim(s). See, e.g., *In re Berg*, 140 F.3d 1428, 46 USPQ2d 1226 (Fed. Cir. 1998); *In re Goodman*, 11 F.3d 1046, 29 USPQ2d 2010 (Fed. Cir. 1993); *In re Longi*, 759 F.2d 887, 225 USPQ 645 (Fed. Cir. 1985); *In re Van Ornum*, 686 F.2d 937, 214 USPQ 761 (CCPA 1982); *In re Vogel*, 422 F.2d 438, 164 USPQ 619 (CCPA 1970); and *In re Thorington*, 418 F.2d 528, 163 USPQ 644 (CCPA 1969).

A timely filed terminal disclaimer in compliance with 37 CFR 1.321(c) or 1.321(d) may be used to overcome an actual or provisional rejection based on a nonstatutory double patenting ground provided the reference application or patent either is shown to be commonly owned with this application, or claims an invention made as a result of activities undertaken within the scope of a joint research agreement. A terminal disclaimer must be signed in compliance with 37 CFR 1.321(b).

The USPTO internet Web site contains terminal disclaimer forms which may be used. Please visit http://www.uspto.gov/forms/. The filing date of the application will determine what form should be used. A web-based eTerminal Disclaimer may be filled out completely online using web-screens. An eTerminal Disclaimer that meets all requirements is auto-processed and approved immediately upon submission. For more information about eTerminal Disclaimers, refer to http://www.uspto.gov/patents/process/file/efs/guidance/eTD-info-I.jsp.

Claims 1, 2 and 6-14 are rejected on the ground of nonstatutory double patenting as being unpatentable over claims 1-10 of U.S. Patent No. 6,823,889. Although the claims at issue are not identical, they are not patentably distinct from each other because the structures being claimed in this application are essentially similar to that of U.S. Patent No. 6,823,889.

Claims 1-3, 6-16, 19 and 20 are rejected on the ground of nonstatutory double patenting as being unpatentable over claim 1 of U.S. Patent No. 7,743,436. Although the claims at issue are not identical, they are not patentably distinct from each other because the structures being claimed in this application are essentially similar to that of U.S. Patent No. 7,743,436.

Claims 1-3, 5-16 and 18-20 are rejected on the ground of nonstatutory double patenting as being unpatentable over claim 1 of U.S. Patent No. 8,650,671. Although the claims at issue are not identical, they are not patentably distinct from each other because the structures being claimed in this application are essentially similar to that of U.S. Patent No. 8,650,671.

Conclusion

The prior art made of record and not relied upon is considered pertinent to applicant's disclosure. Trolio teaches another bowl fill valve having some structures similar to the instant invention.

Any inquiry concerning this communication or earlier communications from the examiner should be directed to TUAN N. NGUYEN whose telephone number is

(571)272-4892. The examiner can normally be reached on Monday to Friday between 10am-6pm.

If attempts to reach the examiner by telephone are unsuccessful, the examiner's supervisor, Paul Durand can be reached on 571-272-4459. The fax phone number for the organization where this application or proceeding is assigned is 571-273-8300.

Information regarding the status of an application may be obtained from the Patent Application Information Retrieval (PAIR) system. Status information for published applications may be obtained from either Private PAIR or Public PAIR. Status information for unpublished applications is available through Private PAIR only. For more information about the PAIR system, see http://pair-direct.uspto.gov. Should you have questions on access to the Private PAIR system, contact the Electronic Business Center (EBC) at 866-217-9197 (toll-free). If you would like assistance from a USPTO Customer Service Representative or access to the automated information system, call 800-786-9199 (IN USA OR CANADA) or 571-272-1000.

/TUAN N NGUYEN/
Primary Examiner, Art Unit 3751

Notice of References Cited	Application/Control No. 14/164,424	Applicant(s)/Patent Under Reexamination SCHUSTER ET AL.	
	Examiner TUAN N. NGUYEN	Art Unit 3751	Page 1 of 1

U.S. PATENT DOCUMENTS

*		Document Number Country Code-Number-Kind Code	Date MM-YYYY	Name	Classification
*	A	US-2004/0199989 A1	10-2004	Trolio, Anthony M.	004/427
	B	US-			
	C	US-			
	D	US-			
	E	US-			
	F	US-			
	G	US-			
	H	US-			
	I	US-			
	J	US-			
	K	US-			
	L	US-			
	M	US-			

FOREIGN PATENT DOCUMENTS

*		Document Number Country Code-Number-Kind Code	Date MM-YYYY	Country	Name	Classification
	N					
	O					
	P					
	Q					
	R					
	S					
	T					

NON-PATENT DOCUMENTS

*		Include as applicable: Author, Title Date, Publisher, Edition or Volume, Pertinent Pages)
	U	
	V	
	W	
	X	

*A copy of this reference is not being furnished with this Office action. (See MPEP § 707.05(a).)
Dates in MM-YYYY format are publication dates. Classifications may be US or foreign.

Search Notes	Application/Control No.	Applicant(s)/Patent under Reexamination
	14/164,424	SCHUSTER ET AL.
	Examiner	Art Unit
	TUAN N. NGUYEN	3751

SEARCHED			
Class	Subclass	Date	Examiner
4	331 324 366 415 675	12/29/2014	TN
285	91		
137	15.26		
	432 434		
	436 437		
	441-444	12/29/2014	TN

INTERFERENCE SEARCHED			
Class	Subclass	Date	Examiner

SEARCH NOTES (INCLUDING SEARCH STRATEGY)		
	DATE	EXMR
REVIEW PARENT CASES	12/29/2014	TN

Under the Paperwork Reduction Act of 1995, no persons are required to respond to a collection of information unless it contains a valid OMB control number.

INFORMATION DISCLOSURE STATEMENT BY APPLICANT (**Not for submission under 37 CFR 1.99)**	Application Number	
	Filing Date	2014-01-27
	First Named Inventor	Michael J. Schuster
	Art Unit	TBD
	Examiner Name	TBD
	Attorney Docket Number	171401-1034

U.S.PATENTS						Remove
Examiner Initial*	Cite No	Patent Number	Kind Code[1]	Issue Date	Name of Patentee or Applicant of cited Document	Pages,Columns,Lines where Relevant Passages or Relevant Figures Appear
	1	1787601		1931-01-06	Swanberg	
	2	2087503		1937-07-20	Clemmons	
	3	2512176		1950-06-20	Shaffer	
	4	2791235		1957-05-07	Smith	
	5	3040769		1962-06-26	Lamb	
	6	3086546		1963-04-23	Brown	
	7	3172128		1965-03-09	Ducey	
	8	3457947		1969-07-29	Fitzgerald	

ALL REFERENCES CONSIDERED EXCEPT WHERE LINED THROUGH. /T.N./

Receipt date: 01/27/2014	Application Number	14164424 - GAU: 3751
INFORMATION DISCLOSURE STATEMENT BY APPLICANT (**Not for submission under 37 CFR 1.99)**	Filing Date	2014-01-27
	First Named Inventor	Michael J. Schuster
	Art Unit	TBD
	Examiner Name	TBD
	Attorney Docket Number	171401-1034

	9	3744064		1973-07-10	Preston	
	10	4351071		1982-09-28	Clar	
	11	4700413		1987-10-20	Lopez	
	12	4770388		1988-09-13	Carman	
	13	5083323		1992-01-28	Cannan	
	14	5228152		1993-07-20	Fraley	
	15	5232011		1993-08-03	Royalty	
	16	5327931		1994-07-12	Royalty	
	17	5442820		1995-08-22	Becker	
	18	5542448		1996-08-06	Campbell et al.	
	19	5742951		1998-04-28	Wright et al.	

EFS Web 2.1.17 ALL REFERENCES CONSIDERED EXCEPT WHERE LINED THROUGH. /T.N./

Receipt date: 01/27/2014	Application Number	14164424 - GAU: 3751
INFORMATION DISCLOSURE STATEMENT BY APPLICANT (**Not for submission under 37 CFR 1.99)**	Filing Date	2014-01-27
	First Named Inventor	Michael J. Schuster
	Art Unit	TBD
	Examiner Name	TBD
	Attorney Docket Number	171401-1034

	20	5775366		1998-07-07	Ray	
	21	6219856	B1	2001-04-24	Alles	
	22	6385788	B1	2002-05-14	Wasielewski	
	23	0136128		1873-02-25	Bralley	
	24	0994746		1911-06-13	Dwyer et al.	
	25	0996743		1911-07-04	Yancey	
	26	1113057		1914-10-06	Schumann	
	27	2465866		1949-03-29	Gaines	
	28	2736037		1956-02-28	Hardie	
	29	2799865		1957-07-23	Schuster	
	30	3321972		1967-05-30	Goldtrap	

ALL REFERENCES CONSIDERED EXCEPT WHERE LINED THROUGH. /T.N./

Receipt date: 01/27/2014	Application Number	14164424 - GAU: 3751
INFORMATION DISCLOSURE STATEMENT BY APPLICANT (**Not for submission under 37 CFR 1.99)**	Filing Date	2014-01-27
	First Named Inventor	Michael J. Schuster
	Art Unit	TBD
	Examiner Name	TBD
	Attorney Docket Number	171401-1034

	31	3762395		1973-10-02	Taylor	
	32	4134164		1979-01-16	Sanmartin Rial	
	33	4505231		1985-03-19	Syler	
	34	4527295		1985-07-09	Lacore	
	35	4898124		1990-02-06	Granberg et al.	
	36	5794279		1998-08-18	Schwartz	
	37	5862537		1999-01-26	Osmond	
	38	6295660		2001-10-02	Schuster	
	39	3986216		1976-10-19	Davis et al.	
	40	3994628		1976-11-30	Kemper	
	41	4007498		1977-02-15	Pearson	

EFS Web 2.1.17 ALL REFERENCES CONSIDERED EXCEPT WHERE LINED THROUGH. /T.N./

Receipt date: 01/27/2014	Application Number	14164424 - GAU: 3751
INFORMATION DISCLOSURE STATEMENT BY APPLICANT (**Not for submission under 37 CFR 1.99)**	Filing Date	2014-01-27
	First Named Inventor	Michael J. Schuster
	Art Unit	TBD
	Examiner Name	TBD
	Attorney Docket Number	171401-1034

	42	4017916		1977-04-19	Pearson	
	43	4032822		1977-06-28	Un	
	44	4090532		1978-05-23	Story, Jr.	
	45	4145775		1979-03-27	Butler	
	46	4392260		1983-07-12	Bensen	
	47	4707867		1987-11-24	Kawabe et al.	
	48	4764996		1988-08-23	Pino	
	49	4793588		1988-12-27	Laverty, Jr.	
	50	4918764		1990-04-24	Haselswerdt et al.	
	51	4980932		1991-01-01	Stemples	
	52	5007452		1991-04-16	Antunez	

EFS Web 2.1.17 ALL REFERENCES CONSIDERED EXCEPT WHERE LINED THROUGH. /T.N./

Receipt date: 01/27/2014	Application Number	14164424 - GAU: 3751
INFORMATION DISCLOSURE STATEMENT BY APPLICANT (**Not for submission under 37 CFR 1.99)**	Filing Date	2014-01-27
	First Named Inventor	Michael J. Schuster
	Art Unit	TBD
	Examiner Name	TBD
	Attorney Docket Number	171401-1034

	53	5036553		1991-08-06	Sanderson	
	54	5052060		1991-10-01	Makita et al.	
	55	5134729		1992-08-04	Shaw	
	56	5245710		1993-09-21	Haselswerdt et al.	
	57	5362026		1994-11-08	Kobayashi et al.	
	58	5432959		1995-07-18	Ellsworth et al.	
	59	5469586		1995-11-28	Tsutsui et al.	
	60	5708991		1998-01-20	DeMarco	
	61	5715860		1998-02-10	Horad	
	62	6202227	B1	2001-03-20	Gurowitz	
	63	6209576	B1	2001-04-03	Davis	

EFS Web 2.1.17 ALL REFERENCES CONSIDERED EXCEPT WHERE LINED THROUGH. /T.N./

Receipt date: 01/27/2014	Application Number	14164424 - GAU: 3751
INFORMATION DISCLOSURE STATEMENT BY APPLICANT (**Not for submission under 37 CFR 1.99)**	Filing Date	2014-01-27
	First Named Inventor	Michael J. Schuster
	Art Unit	TBD
	Examiner Name	TBD
	Attorney Docket Number	171401-1034

	64	6263519	B1	2001-07-24	Parsons et al.	
	65	6560790	B2	2003-05-13	Saar et al.	
	66	4420845		1983-12-20	Antunez	
	67	6823889		2004-11-30	Schuster	
	68	6409221	B1	2002-06-25	Robinson et al.	
	69	5926868	A	1999-07-27	Bjerke, Thomas E.	
	70	5624073		1997-04-29	Mueller et al.	
	71	6047725		2000-04-11	Gish et al.	

If you wish to add additional U.S. Patent citation information please click the Add button. **Add**

U.S.PATENT APPLICATION PUBLICATIONS Remove

Examiner Initial*	Cite No	Publication Number	Kind Code[1]	Publication Date	Name of Patentee or Applicant of cited Document	Pages,Columns,Lines where Relevant Passages or Relevant Figures Appear
	1	20020092090	A1	2002-07-18	Johnson	

EFS Web 2.1.17 ALL REFERENCES CONSIDERED EXCEPT WHERE LINED THROUGH. /T.N./

Receipt date: 01/27/2014	Application Number	14164424 - GAU: 3751
INFORMATION DISCLOSURE STATEMENT BY APPLICANT (**Not for submission under 37 CFR 1.99)**	Filing Date	2014-01-27
	First Named Inventor	Michael J. Schuster
	Art Unit	TBD
	Examiner Name	TBD
	Attorney Docket Number	171401-1034

	2	20020162166	A1	2002-11-07	Saar et al.		

If you wish to add additional U.S. Published Application citation information please click the Add button. Add

FOREIGN PATENT DOCUMENTS Remove

Examiner Initial*	Cite No	Foreign Document Number[3]	Country Code[2] ¡	Kind Code[4]	Publication Date	Name of Patentee or Applicant of cited Document	Pages,Columns,Lines where Relevant Passages or Relevant Figures Appear	T[5]
	1							☐

If you wish to add additional Foreign Patent Document citation information please click the Add button Add

NON-PATENT LITERATURE DOCUMENTS Remove

Examiner Initials*	Cite No	Include name of the author (in CAPITAL LETTERS), title of the article (when appropriate), title of the item (book, magazine, journal, serial, symposium, catalog, etc), date, pages(s), volume-issue number(s), publisher, city and/or country where published.	T[5]
	1	US Patent 6,823,889, File History, 2004-2005 Great-Great-Grandparent Patent to this Application (copy not attached).	☐
	2	US Patent 7,743,436, File History, 2004-2010 Great-Grandparent Patent to this Application (copy not attached).	☐
	3	US Patent 8,104,105, File History, (2010-2012) Grandparent to this Application (copy not attached).	☐
	4	US Application 13/346,355 File History (2012-2014) Parent to this Application (copy not attached).	☐

If you wish to add additional non-patent literature document citation information please click the Add button Add

EXAMINER SIGNATURE

Examiner Signature	/Tuan Nguyen/	Date Considered	12/29/2014

*EXAMINER: Initial if reference considered, whether or not citation is in conformance with MPEP 609. Draw line through a citation if not in conformance and not considered. Include copy of this form with next communication to applicant.

EFS Web 2.1.17 ALL REFERENCES CONSIDERED EXCEPT WHERE LINED THROUGH. /T.N./

Receipt date: 01/27/2014	Application Number	14164424 - GAU: 3751
INFORMATION DISCLOSURE STATEMENT BY APPLICANT (**Not for submission under 37 CFR 1.99)**	Filing Date	2014-01-27
	First Named Inventor	Michael J. Schuster
	Art Unit	TBD
	Examiner Name	TBD
	Attorney Docket Number	171401-1034

[1] See Kind Codes of USPTO Patent Documents at www.USPTO.GOV or MPEP 901.04. [2] Enter office that issued the document, by the two-letter code (WIPO Standard ST.3). [3] For Japanese patent documents, the indication of the year of the reign of the Emperor must precede the serial number of the patent document. [4] Kind of document by the appropriate symbols as indicated on the document under WIPO Standard ST.16 if possible. [5] Applicant is to place a check mark here if English language translation is attached.

EFS Web 2.1.17 ALL REFERENCES CONSIDERED EXCEPT WHERE LINED THROUGH. /T.N./

Receipt date: 01/27/2014	Application Number	14164424 - GAU: 3751
INFORMATION DISCLOSURE STATEMENT BY APPLICANT (**Not for submission under 37 CFR 1.99)**	Filing Date	2014-01-27
	First Named Inventor	Michael J. Schuster
	Art Unit	TBD
	Examiner Name	TBD
	Attorney Docket Number	171401-1034

CERTIFICATION STATEMENT

Please see 37 CFR 1.97 and 1.98 to make the appropriate selection(s):

☐ That each item of information contained in the information disclosure statement was first cited in any communication from a foreign patent office in a counterpart foreign application not more than three months prior to the filing of the information disclosure statement. See 37 CFR 1.97(e)(1).

OR

☐ That no item of information contained in the information disclosure statement was cited in a communication from a foreign patent office in a counterpart foreign application, and, to the knowledge of the person signing the certification after making reasonable inquiry, no item of information contained in the information disclosure statement was known to any individual designated in 37 CFR 1.56(c) more than three months prior to the filing of the information disclosure statement. See 37 CFR 1.97(e)(2).

☐ See attached certification statement.

☐ Fee set forth in 37 CFR 1.17 (p) has been submitted herewith.

☒ None

SIGNATURE

A signature of the applicant or representative is required in accordance with CFR 1.33, 10.18. Please see CFR 1.4(d) for the form of the signature.

Signature	/RDG/	Date (YYYY-MM-DD)	2014-01-27
Name/Print	Robert D. Gravois	Registration Number	67244

This collection of information is required by 37 CFR 1.97 and 1.98. The information is required to obtain or retain a benefit by the public which is to file (and by the USPTO to process) an application. Confidentiality is governed by 35 U.S.C. 122 and 37 CFR 1.14. This collection is estimated to take 1 hour to complete, including gathering, preparing and submitting the completed application form to the USPTO. Time will vary depending upon the individual case. Any comments on the amount of time you require to complete this form and/or suggestions for reducing this burden, should be sent to the Chief Information Officer, U.S. Patent and Trademark Office, U.S. Department of Commerce, P.O. Box 1450, Alexandria, VA 22313-1450. DO NOT SEND FEES OR COMPLETED FORMS TO THIS ADDRESS. **SEND TO: Commissioner for Patents, P.O. Box 1450, Alexandria, VA 22313-1450.**

ALL REFERENCES CONSIDERED EXCEPT WHERE LINED THROUGH. /T.N./

Privacy Act Statement

The Privacy Act of 1974 (P.L. 93-579) requires that you be given certain information in connection with your submission of the attached form related to a patent application or patent. Accordingly, pursuant to the requirements of the Act, please be advised that: (1) the general authority for the collection of this information is 35 U.S.C. 2(b)(2); (2) furnishing of the information solicited is voluntary; and (3) the principal purpose for which the information is used by the U.S. Patent and Trademark Office is to process and/or examine your submission related to a patent application or patent. If you do not furnish the requested information, the U.S. Patent and Trademark Office may not be able to process and/or examine your submission, which may result in termination of proceedings or abandonment of the application or expiration of the patent.

The information provided by you in this form will be subject to the following routine uses:

1. The information on this form will be treated confidentially to the extent allowed under the Freedom of Information Act (5 U.S.C. 552) and the Privacy Act (5 U.S.C. 552a). Records from this system of records may be disclosed to the Department of Justice to determine whether the Freedom of Information Act requires disclosure of these record s.

2. A record from this system of records may be disclosed, as a routine use, in the course of presenting evidence to a court, magistrate, or administrative tribunal, including disclosures to opposing counsel in the course of settlement negotiations.

3. A record in this system of records may be disclosed, as a routine use, to a Member of Congress submitting a request involving an individual, to whom the record pertains, when the individual has requested assistance from the Member with respect to the subject matter of the record.

4. A record in this system of records may be disclosed, as a routine use, to a contractor of the Agency having need for the information in order to perform a contract. Recipients of information shall be required to comply with the requirements of the Privacy Act of 1974, as amended, pursuant to 5 U.S.C. 552a(m).

5. A record related to an International Application filed under the Patent Cooperation Treaty in this system of records may be disclosed, as a routine use, to the International Bureau of the World Intellectual Property Organization, pursuant to the Patent Cooperation Treaty.

6. A record in this system of records may be disclosed, as a routine use, to another federal agency for purposes of National Security review (35 U.S.C. 181) and for review pursuant to the Atomic Energy Act (42 U.S.C. 218(c)).

7. A record from this system of records may be disclosed, as a routine use, to the Administrator, General Services, or his/her designee, during an inspection of records conducted by GSA as part of that agency's responsibility to recommend improvements in records management practices and programs, under authority of 44 U.S.C. 2904 and 2906. Such disclosure shall be made in accordance with the GSA regulations governing inspection of records for this purpose, and any other relevant (i.e., GSA or Commerce) directive. Such disclosure shall not be used to make determinations about individuals.

8. A record from this system of records may be disclosed, as a routine use, to the public after either publication of the application pursuant to 35 U.S.C. 122(b) or issuance of a patent pursuant to 35 U.S.C. 151. Further, a record may be disclosed, subject to the limitations of 37 CFR 1.14, as a routine use, to the public if the record was filed in an application which became abandoned or in which the proceedings were terminated and which application is referenced by either a published application, an application open to public inspections or an issued patent.

9. A record from this system of records may be disclosed, as a routine use, to a Federal, State, or local law enforcement agency, if the USPTO becomes aware of a violation or potential violation of law or regulation.

ALL REFERENCES CONSIDERED EXCEPT WHERE LINED THROUGH. /T.N./

UNITED STATES PATENT AND TRADEMARK OFFICE

UNITED STATES DEPARTMENT OF COMMERCE
United States Patent and Trademark Office
Address: COMMISSIONER FOR PATENTS
P.O. Box 1450
Alexandria, Virginia 22313-1450
www.uspto.gov

APPLICATION NUMBER	FILING OR 371(C) DATE	FIRST NAMED APPLICANT	ATTY. DOCKET NO./TITLE
14/164,424	01/27/2014	Michael J. Schuster	171401-1034

CONFIRMATION NO. 2529

POA ACCEPTANCE LETTER

24504
THOMAS | HORSTEMEYER, LLP
400 INTERSTATE NORTH PARKWAY SE
SUITE 1500
ATLANTA, GA 30339

OC000000070121301

Date Mailed: 08/14/2014

NOTICE OF ACCEPTANCE OF POWER OF ATTORNEY

This is in response to the Power of Attorney filed 08/07/2014.

The Power of Attorney in this application is accepted. Correspondence in this application will be mailed to the above address as provided by 37 CFR 1.33.

/nfissha/

Office of Data Management, Application Assistance Unit (571) 272-4000, or (571) 272-4200, or 1-888-786-0101

IN THE UNITED STATES PATENT AND TRADEMARK OFFICE

In re the application of:
Schuster, *et al.*

Confirmation: 2529
Art Unit: TBD

Application Number: 14/164,424

Examiner: TBD

Filing Date: January 27, 2014

Docket No.: 171401-1034

Title: **TOILET FILL VALVE**

SUBMISSION OF DECLARATIONS AND POWER OF ATTORNEY

Commissioner for Patents
P.O. Box 1450
Alexandria, Virginia 22313-1450

Sir:

Applicant herewith submits the following documents:

1. Executed Declarations for Patent Application in the above-identified patent application; and

2. Power of Attorney.

The Commissioner is authorized to charge Deposit Account 20-0778 for any deficiencies or credit any overpayments.

Respectfully submitted,

THOMAS | HORSTEMEYER, LLP

By: /Robert D. Gravois/
Robert D. Gravois, Reg. No. 62,224

400 Interstate North Parkway
Suite 1500
Atlanta, Georgia 30339-5948
770-933-9500

DECLARATION FOR PATENT APPLICATION

Attorney Docket No: 171401-1034

Title of Invention: **TOILET FILL VALVE**

As the below named inventor, I hereby declare that:

This declaration is directed to:

☐ The attached application, or
☒ United States application or PCT International Application No. 14/164,424

The above-identified application was made or authorized to be made by me.

I believe that I am the original inventor or an original joint inventor of a claimed invention in the application.

I hereby state that I have reviewed and understand the contents of the above-identified specification, including the claims, as amended by any amendment referred to above.

I acknowledge the duty to disclose information known by me to be material to patentability as defined in 37 CFR 1.56, including for continuation-in-part applications, material information which became available between the filing date of the prior application and the national or PCT international filing date of the continuation-in-part application.

I hereby acknowledge that any willful false statement made in this declaration is punishable under 18 U.S.C. 1001 by fine or imprisonment of not more than five (5) years, or both.

Inventor's Signature: _____ Date: 8-1-14

Legal Name of Inventor: Michael J. Schuster

DECLARATION FOR PATENT APPLICATION

Attorney Docket No: 171401-1034

Title of Invention: **TOILET FILL VALVE**

As the below named inventor, I hereby declare that:

This declaration is directed to:

☐ The attached application, or
☒ United States application or PCT International Application No. 14/164,424.

The above-identified application was made or authorized to be made by me.

I believe that I am the original inventor or an original joint inventor of a claimed invention in the application.

I hereby state that I have reviewed and understand the contents of the above-identified specification, including the claims, as amended by any amendment referred to above.

I acknowledge the duty to disclose information known by me to be material to patentability as defined in 37 CFR 1.56, including for continuation-in-part applications, material information which became available between the filing date of the prior application and the national or PCT international filing date of the continuation-in-part application.

I hereby acknowledge that any willful false statement made in this declaration is punishable under 18 U.S.C. 1001 by fine or imprisonment of not more than five (5) years, or both.

Inventor's Signature: Larry Schneider Date: April 21, 2014

Legal Name of Inventor: Larry Schneider

Doc Code: PA..
Document Description: Power of Attorney

PTO/AIA/82A (07-12)
Approved for use through 11/30/2014. OMB 0651-0035
U.S. Patent and Trademark Office; U.S. DEPARTMENT OF COMMERCE
Under the Paperwork Reduction Act of 1995, no persons are required to respond to a collection of information unless it displays a valid OMB control number.

TRANSMITTAL FOR POWER OF ATTORNEY TO ONE OR MORE REGISTERED PRACTITIONERS

NOTE: This form is to be submitted with the Power of Attorney by Applicant form (PTO/AIA/82B or equivalent) to identify the application to which the Power of Attorney is directed, in accordance with 37 CFR 1.5. If the Power of Attorney by Applicant form is not accompanied by this transmittal form or an equivalent, the Power of Attorney will not be recognized in the application.

Application Number	14/164,424
Filing Date	January 27, 2014
First Named Inventor	Michael J. Schuster
Title	Toilet Fill Valve
Art Unit	3751
Examiner Name	TBD
Attorney Docket Number	171401-1034

SIGNATURE of Applicant or Patent Practitioner

Signature	/Robert D. Gravois/	Date	08/07/2014
Name	Robert D. Gravois	Telephone	770-933-9500
Registration Number	62,224		

NOTE: This form must be signed in accordance with 37 CFR 1.33. See 37 CFR 1.4(d) for signature requirements and certifications.

☐ *Total of _____ forms are submitted.

This collection of information is required by 37 CFR 1.31, 1.32 and 1.33. The information is required to obtain or retain a benefit by the public which is to file (and by the USPTO to process) an application. Confidentiality is governed by 35 U.S.C. 122 and 37 CFR 1.11 and 1.14. This collection is estimated to take 3 minutes to complete, including gathering, preparing, and submitting the completed application form to the USPTO. Time will vary depending upon the individual case. Any comments on the amount of time you require to complete this form and/or suggestions for reducing this burden, should be sent to the Chief Information Officer, U.S. Patent and Trademark Office, U.S. Department of Commerce, P.O. Box 1450, Alexandria, VA 22313-1450. DO NOT SEND FEES OR COMPLETED FORMS TO THIS ADDRESS. **SEND TO: Commissioner for Patents, P.O. Box 1450, Alexandria, VA 22313-1450.**

If you need assistance in completing the form, call 1-800-PTO-9199 and select option 2.

Doc Code: PA..
Document Description: Power of Attorney

PTO/AIA/82B(07-12)
Approved for use through 11/30/2014. OMB 0651-0035
U.S. Patent and Trademark Office; U.S. DEPARTMENT OF COMMERCE
Under the Paperwork Reduction Act of 1995, no persons are required to respond to a collection of information unless it displays a valid OMB control number.

POWER OF ATTORNEY BY APPLICANT

I hereby revoke all previous powers of attorney given in the application identified in the attached transmittal letter.

[x] I hereby appoint Practitioner(s) associated with the following Customer Number as my/our attorney(s) or agent(s), and to transact all business in the United States Patent and Trademark Office connected therewith for the application referenced in the attached transmittal letter (form PTO/AIA/82A or equivalent): 24504

OR

[ ] I hereby appoint Practitioner(s) named below as my/our attorney(s) or agent(s), and to transact all business in the United States Patent and Trademark Office connected therewith for the application referenced in the attached transmittal letter (form PTO/AIA/82A or equivalent):

Name	Registration Number	Name	Registration Number

Please recognize or change the correspondence address for the application identified in the attached transmittal letter to:

[x] The address associated with the above-mentioned Customer Number.
OR
[ ] The address associated with Customer Number:
OR

[ ] Firm or Individual Name					
Address					
City		State		Zip	
Country					
Telephone		Email			

I am the Applicant:

[ ] Inventor or Joint Inventor
[ ] Legal Representative of a Deceased or Legally Incapacitated Inventor
[x] Assignee or Person to Whom the Inventor is Under an Obligation to Assign
[ ] Person Who Otherwise Shows Sufficient Proprietary Interest (*e.g.*, a petition under 37 CFR 1.46(b)(2) was granted in the application or is concurrently being filed with this document)

SIGNATURE of Applicant for Patent

Signature		Date	April 9, 2014
Name	Russell L. Price	Telephone	972-438-0023
Title and Company	Vice President and Secretary, Danco Inc.		

NOTE: Signature - This form must be signed by the applicant in accordance with 37 CFR 1.33. See 37 CFR 1.4 for signature requirements and certifications. Submit multiple forms for more than one signature, see below *.

[ ] *Total of _____ forms are submitted.

This collection of information is required by 37 CFR 1.31, 1.32 and 1.33. The information is required to obtain or retain a benefit by the public which is to file (and by the USPTO to process) an application. Confidentiality is governed by 35 U.S.C. 122 and 37 CFR 1.11 and 1.14. This collection is estimated to take 3 minutes to complete, including gathering, preparing, and submitting the completed application form to the USPTO. Time will vary depending upon the individual case. Any comments on the amount of time you require to complete this form and/or suggestions for reducing this burden, should be sent to the Chief Information Officer, U.S. Patent and Trademark Office, U.S. Department of Commerce, P.O. Box 1450, Alexandria, VA 22313-1450. DO NOT SEND FEES OR COMPLETED FORMS TO THIS ADDRESS. SEND TO: **Commissioner for Patents, P.O. Box 1450, Alexandria, VA 22313-1450.**

If you need assistance in completing the form, call 1-800-PTO-9199 and select option 2.

Privacy Act Statement

The **Privacy Act of 1974 (P.L. 93-579)** requires that you be given certain information in connection with your submission of the attached form related to a patent application or patent. Accordingly, pursuant to the requirements of the Act, please be advised that: (1) the general authority for the collection of this information is 35 U.S.C. 2(b)(2); (2) furnishing of the information solicited is voluntary; and (3) the principal purpose for which the information is used by the U.S. Patent and Trademark Office is to process and/or examine your submission related to a patent application or patent. If you do not furnish the requested information, the U.S. Patent and Trademark Office may not be able to process and/or examine your submission, which may result in termination of proceedings or abandonment of the application or expiration of the patent.

The information provided by you in this form will be subject to the following routine uses:

1. The information on this form will be treated confidentially to the extent allowed under the Freedom of Information Act (5 U.S.C. 552) and the Privacy Act (5 U.S.C 552a). Records from this system of records may be disclosed to the Department of Justice to determine whether disclosure of these records is required by the Freedom of Information Act.
2. A record from this system of records may be disclosed, as a routine use, in the course of presenting evidence to a court, magistrate, or administrative tribunal, including disclosures to opposing counsel in the course of settlement negotiations.
3. A record in this system of records may be disclosed, as a routine use, to a Member of Congress submitting a request involving an individual, to whom the record pertains, when the individual has requested assistance from the Member with respect to the subject matter of the record.
4. A record in this system of records may be disclosed, as a routine use, to a contractor of the Agency having need for the information in order to perform a contract. Recipients of information shall be required to comply with the requirements of the Privacy Act of 1974, as amended, pursuant to 5 U.S.C. 552a(m).
5. A record related to an International Application filed under the Patent Cooperation Treaty in this system of records may be disclosed, as a routine use, to the International Bureau of the World Intellectual Property Organization, pursuant to the Patent Cooperation Treaty.
6. A record in this system of records may be disclosed, as a routine use, to another federal agency for purposes of National Security review (35 U.S.C. 181) and for review pursuant to the Atomic Energy Act (42 U.S.C. 218(c)).
7. A record from this system of records may be disclosed, as a routine use, to the Administrator, General Services, or his/her designee, during an inspection of records conducted by GSA as part of that agency's responsibility to recommend improvements in records management practices and programs, under authority of 44 U.S.C. 2904 and 2906. Such disclosure shall be made in accordance with the GSA regulations governing inspection of records for this purpose, and any other relevant (*i.e.*, GSA or Commerce) directive. Such disclosure shall not be used to make determinations about individuals.
8. A record from this system of records may be disclosed, as a routine use, to the public after either publication of the application pursuant to 35 U.S.C. 122(b) or issuance of a patent pursuant to 35 U.S.C. 151. Further, a record may be disclosed, subject to the limitations of 37 CFR 1.14, as a routine use, to the public if the record was filed in an application which became abandoned or in which the proceedings were terminated and which application is referenced by either a published application, an application open to public inspection or an issued patent.
9. A record from this system of records may be disclosed, as a routine use, to a Federal, State, or local law enforcement agency, if the USPTO becomes aware of a violation or potential violation of law or regulation.

Electronic Acknowledgement Receipt

EFS ID:	19798689
Application Number:	14164424
International Application Number:	
Confirmation Number:	2529
Title of Invention:	Toilet Fill Valve
First Named Inventor/Applicant Name:	Michael J. Schuster
Customer Number:	24504
Filer:	Robert D. Gravois/Julie Campbell
Filer Authorized By:	Robert D. Gravois
Attorney Docket Number:	171401-1034
Receipt Date:	07-AUG-2014
Filing Date:	27-JAN-2014
Time Stamp:	15:01:54
Application Type:	Utility under 35 USC 111(a)

Payment information:

Submitted with Payment	no

File Listing:

Document Number	Document Description	File Name	File Size(Bytes)/ Message Digest	Multi Part /.zip	Pages (if appl.)
1	Applicant Response to Pre-Exam Formalities Notice	02060652.PDF	80124 713bb6d7ad7878065ee4daa122911f9c2493c198	no	1

Warnings:

Information:

2	Oath or Declaration filed	02058843.PDF	241659 ae29605f230afa01c0b77f62eb0f81003733601d	no	1
Warnings:					
Information:					
3	Oath or Declaration filed	02007153.PDF	24238 6f7b7a1cab01457089da79656e6bc9505f940cfd	no	1
Warnings:					
Information:					
4	Power of Attorney	02002737.PDF	225996 d302033b4217a28e56bfc1f2bb5d0af2642ee27f	no	3
Warnings:					
Information:					
		Total Files Size (in bytes):	572017		

This Acknowledgement Receipt evidences receipt on the noted date by the USPTO of the indicated documents, characterized by the applicant, and including page counts, where applicable. It serves as evidence of receipt similar to a Post Card, as described in MPEP 503.

<u>New Applications Under 35 U.S.C. 111</u>
If a new application is being filed and the application includes the necessary components for a filing date (see 37 CFR 1.53(b)-(d) and MPEP 506), a Filing Receipt (37 CFR 1.54) will be issued in due course and the date shown on this Acknowledgement Receipt will establish the filing date of the application.

<u>National Stage of an International Application under 35 U.S.C. 371</u>
If a timely submission to enter the national stage of an international application is compliant with the conditions of 35 U.S.C. 371 and other applicable requirements a Form PCT/DO/EO/903 indicating acceptance of the application as a national stage submission under 35 U.S.C. 371 will be issued in addition to the Filing Receipt, in due course.

<u>New International Application Filed with the USPTO as a Receiving Office</u>
If a new international application is being filed and the international application includes the necessary components for an international filing date (see PCT Article 11 and MPEP 1810), a Notification of the International Application Number and of the International Filing Date (Form PCT/RO/105) will be issued in due course, subject to prescriptions concerning national security, and the date shown on this Acknowledgement Receipt will establish the international filing date of the application.

UNITED STATES PATENT AND TRADEMARK OFFICE

UNITED STATES DEPARTMENT OF COMMERCE
United States Patent and Trademark Office
Address: COMMISSIONER FOR PATENTS
P.O. Box 1450
Alexandria, Virginia 22313-1450
www.uspto.gov

APPLICATION NUMBER	FILING OR 371(C) DATE	FIRST NAMED APPLICANT	ATTY. DOCKET NO./TITLE
14/164,424	01/27/2014	Michael J. Schuster	171401-1034

CONFIRMATION NO. 2529

24504
THOMAS | HORSTEMEYER, LLP
400 INTERSTATE NORTH PARKWAY SE
SUITE 1500
ATLANTA, GA 30339

NOTICE

OC000000066525271

Date Mailed: 02/11/2014

INFORMATIONAL NOTICE TO APPLICANT

Applicant is notified that the above-identified application contains the deficiencies noted below. No period for reply is set forth in this notice for correction of these deficiencies. However, if a deficiency relates to the inventor's oath or declaration, the applicant must file an oath or declaration in compliance with 37 CFR 1.63, or a substitute statement in compliance with 37 CFR 1.64, executed by or with respect to each actual inventor no later than the expiration of the time period set in the "Notice of Allowability" to avoid abandonment. See 37 CFR 1.53(f).

The item(s) indicated below are also required and should be submitted with any reply to this notice to avoid further processing delays.

- A properly executed inventor's oath or declaration has not been received for the following inventor(s):
  Michael J. Schuster
  Larry Schneider

PATENT APPLICATION FEE DETERMINATION RECORD
Substitute for Form PTO-875

Application or Docket Number
14/164,424

APPLICATION AS FILED - PART I

FOR	(Column 1) NUMBER FILED	(Column 2) NUMBER EXTRA	SMALL ENTITY RATE($)	SMALL ENTITY FEE($)	OR	OTHER THAN SMALL ENTITY RATE($)	OTHER THAN SMALL ENTITY FEE($)
BASIC FEE (37 CFR 1.16(a), (b), or (c))	N/A	N/A	N/A			N/A	280
SEARCH FEE (37 CFR 1.16(k), (i), or (m))	N/A	N/A	N/A			N/A	600
EXAMINATION FEE (37 CFR 1.16(o), (p), or (q))	N/A	N/A	N/A			N/A	720
TOTAL CLAIMS (37 CFR 1.16(i))	20 minus 20 =	*			OR	x 80 =	0.00
INDEPENDENT CLAIMS (37 CFR 1.16(h))	3 minus 3 =	*				x 420 =	0.00
APPLICATION SIZE FEE (37 CFR 1.16(s))	If the specification and drawings exceed 100 sheets of paper, the application size fee due is $310 ($155 for small entity) for each additional 50 sheets or fraction thereof. See 35 U.S.C. 41(a)(1)(G) and 37 CFR 1.16(s).						0.00
MULTIPLE DEPENDENT CLAIM PRESENT (37 CFR 1.16(j))							0.00
* If the difference in column 1 is less than zero, enter "0" in column 2.			TOTAL			TOTAL	1600

APPLICATION AS AMENDED - PART II

		(Column 1) CLAIMS REMAINING AFTER AMENDMENT		(Column 2) HIGHEST NUMBER PREVIOUSLY PAID FOR	(Column 3) PRESENT EXTRA	SMALL ENTITY RATE($)	SMALL ENTITY ADDITIONAL FEE($)	OR	OTHER THAN SMALL ENTITY RATE($)	OTHER THAN SMALL ENTITY ADDITIONAL FEE($)
AMENDMENT A	Total (37 CFR 1.16(i))	*	Minus	**	=	x =		OR	x =	
AMENDMENT A	Independent (37 CFR 1.16(h))	*	Minus	***	=	x =		OR	x =	
AMENDMENT A	Application Size Fee (37 CFR 1.16(s))									
AMENDMENT A	FIRST PRESENTATION OF MULTIPLE DEPENDENT CLAIM (37 CFR 1.16(j))							OR		
						TOTAL ADD'L FEE		OR	TOTAL ADD'L FEE	

		(Column 1) CLAIMS REMAINING AFTER AMENDMENT		(Column 2) HIGHEST NUMBER PREVIOUSLY PAID FOR	(Column 3) PRESENT EXTRA	RATE($)	ADDITIONAL FEE($)		RATE($)	ADDITIONAL FEE($)
AMENDMENT B	Total (37 CFR 1.16(i))	*	Minus	**	=	x =		OR	x =	
AMENDMENT B	Independent (37 CFR 1.16(h))	*	Minus	***	=	x =		OR	x =	
AMENDMENT B	Application Size Fee (37 CFR 1.16(s))									
AMENDMENT B	FIRST PRESENTATION OF MULTIPLE DEPENDENT CLAIM (37 CFR 1.16(j))							OR		
						TOTAL ADD'L FEE		OR	TOTAL ADD'L FEE	

* If the entry in column 1 is less than the entry in column 2, write "0" in column 3.
** If the "Highest Number Previously Paid For" IN THIS SPACE is less than 20, enter "20".
*** If the "Highest Number Previously Paid For" IN THIS SPACE is less than 3, enter "3".
The "Highest Number Previously Paid For" (Total or Independent) is the highest found in the appropriate box in column 1.

UNITED STATES PATENT AND TRADEMARK OFFICE

UNITED STATES DEPARTMENT OF COMMERCE
United States Patent and Trademark Office
Address: COMMISSIONER FOR PATENTS
P.O. Box 1450
Alexandria, Virginia 22313-1450
www.uspto.gov

APPLICATION NUMBER	FILING or 371(c) DATE	GRP ART UNIT	FIL FEE REC'D	ATTY.DOCKET.NO	TOT CLAIMS	IND CLAIMS
14/164,424	01/27/2014	3751	1740	171401-1034	20	3

CONFIRMATION NO. 2529

FILING RECEIPT

OC000000066525270

24504
THOMAS | HORSTEMEYER, LLP
400 INTERSTATE NORTH PARKWAY SE
SUITE 1500
ATLANTA, GA 30339

Date Mailed: 02/11/2014

Receipt is acknowledged of this non-provisional patent application. The application will be taken up for examination in due course. Applicant will be notified as to the results of the examination. Any correspondence concerning the application must include the following identification information: the U.S. APPLICATION NUMBER, FILING DATE, NAME OF APPLICANT, and TITLE OF INVENTION. Fees transmitted by check or draft are subject to collection. Please verify the accuracy of the data presented on this receipt. **If an error is noted on this Filing Receipt, please submit a written request for a Filing Receipt Correction. Please provide a copy of this Filing Receipt with the changes noted thereon. If you received a "Notice to File Missing Parts" for this application, please submit any corrections to this Filing Receipt with your reply to the Notice. When the USPTO processes the reply to the Notice, the USPTO will generate another Filing Receipt incorporating the requested corrections**

Inventor(s)

Michael J. Schuster, Shorewood, IL;
Larry Schneider, Wadsworth, IL;

Applicant(s)

Danco, Inc., Irving, TX

Power of Attorney: None

Domestic Priority data as claimed by applicant

This application is a CON of 13/346,355 01/09/2012 PAT 8650671
which is a CON of 12/786,904 05/25/2010 PAT 8104105
which is a CON of 10/958,797 10/05/2004 PAT 7743436
which is a CIP of 10/798,606 03/11/2004 PAT 6823889

Foreign Applications for which priority is claimed (You may be eligible to benefit from the **Patent Prosecution Highway** program at the USPTO. Please see http://www.uspto.gov for more information.) - None.
Foreign application information must be provided in an Application Data Sheet in order to constitute a claim to foreign priority. See 37 CFR 1.55 and 1.76.

If Required, Foreign Filing License Granted: 02/07/2014

The country code and number of your priority application, to be used for filing abroad under the Paris Convention, is **US 14/164,424**

Projected Publication Date: Request for Non-Publication Acknowledged

Non-Publication Request: Yes

Early Publication Request: No

Title

Toilet Fill Valve

Preliminary Class

004

Statement under 37 CFR 1.55 or 1.78 for AIA (First Inventor to File) Transition Applications: No

PROTECTING YOUR INVENTION OUTSIDE THE UNITED STATES

Since the rights granted by a U.S. patent extend only throughout the territory of the United States and have no effect in a foreign country, an inventor who wishes patent protection in another country must apply for a patent in a specific country or in regional patent offices. Applicants may wish to consider the filing of an international application under the Patent Cooperation Treaty (PCT). An international (PCT) application generally has the same effect as a regular national patent application in each PCT-member country. The PCT process **simplifies** the filing of patent applications on the same invention in member countries, but **does not result** in a grant of "an international patent" and does not eliminate the need of applicants to file additional documents and fees in countries where patent protection is desired.

Almost every country has its own patent law, and a person desiring a patent in a particular country must make an application for patent in that country in accordance with its particular laws. Since the laws of many countries differ in various respects from the patent law of the United States, applicants are advised to seek guidance from specific foreign countries to ensure that patent rights are not lost prematurely.

Applicants also are advised that in the case of inventions made in the United States, the Director of the USPTO must issue a license before applicants can apply for a patent in a foreign country. The filing of a U.S. patent application serves as a request for a foreign filing license. The application's filing receipt contains further information and guidance as to the status of applicant's license for foreign filing.

Applicants may wish to consult the USPTO booklet, "General Information Concerning Patents" (specifically, the section entitled "Treaties and Foreign Patents") for more information on timeframes and deadlines for filing foreign patent applications. The guide is available either by contacting the USPTO Contact Center at 800-786-9199, or it can be viewed on the USPTO website at http://www.uspto.gov/web/offices/pac/doc/general/index.html.

For information on preventing theft of your intellectual property (patents, trademarks and copyrights), you may wish to consult the U.S. Government website, http://www.stopfakes.gov. Part of a Department of Commerce initiative, this website includes self-help "toolkits" giving innovators guidance on how to protect intellectual property in specific countries such as China, Korea and Mexico. For questions regarding patent enforcement issues, applicants may call the U.S. Government hotline at 1-866-999-HALT (1-866-999-4258).

Fluidmaster, Inc. - EX1008, Page 082
IPR2024-00634 (Fluidmaster Inc v. Danco Inc)

LICENSE FOR FOREIGN FILING UNDER

Title 35, United States Code, Section 184

Title 37, Code of Federal Regulations, 5.11 & 5.15

GRANTED

The applicant has been granted a license under 35 U.S.C. 184, if the phrase "IF REQUIRED, FOREIGN FILING LICENSE GRANTED" followed by a date appears on this form. Such licenses are issued in all applications where the conditions for issuance of a license have been met, regardless of whether or not a license may be required as set forth in 37 CFR 5.15. The scope and limitations of this license are set forth in 37 CFR 5.15(a) unless an earlier license has been issued under 37 CFR 5.15(b). The license is subject to revocation upon written notification. The date indicated is the effective date of the license, unless an earlier license of similar scope has been granted under 37 CFR 5.13 or 5.14.

This license is to be retained by the licensee and may be used at any time on or after the effective date thereof unless it is revoked. This license is automatically transferred to any related applications(s) filed under 37 CFR 1.53(d). This license is not retroactive.

The grant of a license does not in any way lessen the responsibility of a licensee for the security of the subject matter as imposed by any Government contract or the provisions of existing laws relating to espionage and the national security or the export of technical data. Licensees should apprise themselves of current regulations especially with respect to certain countries, of other agencies, particularly the Office of Defense Trade Controls, Department of State (with respect to Arms, Munitions and Implements of War (22 CFR 121-128)); the Bureau of Industry and Security, Department of Commerce (15 CFR parts 730-774); the Office of Foreign AssetsControl, Department of Treasury (31 CFR Parts 500+) and the Department of Energy.

NOT GRANTED

No license under 35 U.S.C. 184 has been granted at this time, if the phrase "IF REQUIRED, FOREIGN FILING LICENSE GRANTED" DOES NOT appear on this form. Applicant may still petition for a license under 37 CFR 5.12, if a license is desired before the expiration of 6 months from the filing date of the application. If 6 months has lapsed from the filing date of this application and the licensee has not received any indication of a secrecy order under 35 U.S.C. 181, the licensee may foreign file the application pursuant to 37 CFR 5.15(b).

SelectUSA

The United States represents the largest, most dynamic marketplace in the world and is an unparalleled location for business investment, innovation, and commercialization of new technologies. The U.S. offers tremendous resources and advantages for those who invest and manufacture goods here. Through SelectUSA, our nation works to promote and facilitate business investment. SelectUSA provides information assistance to the international investor community; serves as an ombudsman for existing and potential investors; advocates on behalf of U.S. cities, states, and regions competing for global investment; and counsels U.S. economic development organizations on investment attraction best practices. To learn more about why the United States is the best country in the world to develop technology, manufacture products, deliver services, and grow your business, visit http://www.SelectUSA.gov or call +1-202-482-6800.

IN THE UNITED STATES PATENT AND TRADEMARK OFFICE

In re the application of:	Confirmation: 2529
Schuster, *et al.*	Art Unit: TBD
Application Number: 14/164,424	Examiner: TBD
Filing Date: January 27, 2014	Docket No.: 171401-1034

Title: **TOILET FILL VALVE**

PRELIMINARY REMARKS

Mail Stop: Amendment
Commissioner for Patents
P.O. Box 1450
Alexandria, VA 22313-1450

Sir:

With respect to the above-referenced application, the Applicants submit the following preliminary remarks to be considered prior to examination.

REMARKS

At least some elements of the independent claims of the present application are broader in scope than elements in the claims pursued in the applications to which priority is claimed. For example, independent claim 1 of the present application recites, "a bowl fill restriction," which is broader than "a bowl fill valve," which is recited in independent claim 1 of Application No. 13/346,355. To the extent that any prior amendments or arguments made during prosecution of the earlier applications could be construed as a disclaimer of any subject matter supported by the present disclosure, Applicants hereby rescind and retract such disclaimer. *See Hakim v. Cannon Avent Group, PLC*, 479 F.3d 1313 (Fed. Cir. 2007). Accordingly, the references previously presented in the applications to which priority is claimed may need to be revisited.

If the Examiner has any questions or comments, the Examiner is encouraged to telephone the undersigned attorney of Applicants.

Respectfully submitted,

/RDG/

_____

Robert D. Gravois
Registration Number: 67,224

THOMAS | HORSTEMEYER, LLP
Customer Number 24504
(770) 933-9500

Electronic Acknowledgement Receipt

EFS ID:	18136369
Application Number:	14164424
International Application Number:	
Confirmation Number:	2529
Title of Invention:	Toilet Fill Valve
First Named Inventor/Applicant Name:	Michael J. Schuster
Customer Number:	24504
Filer:	Robert D. Gravois/Stephanie Davy-Jow
Filer Authorized By:	Robert D. Gravois
Attorney Docket Number:	171401-1034
Receipt Date:	06-FEB-2014
Filing Date:	
Time Stamp:	16:24:55
Application Type:	Utility under 35 USC 111(a)

Payment information:

Submitted with Payment	no

File Listing:

Document Number	Document Description	File Name	File Size(Bytes)/ Message Digest	Multi Part /.zip	Pages (if appl.)
1	Miscellaneous Incoming Letter	01972226.PDF	69172 d014cbedc0b61bade0dca5baac09d9b2cda86d4f	no	2

Warnings:

Information:

Total Files Size (in bytes):	69172

This Acknowledgement Receipt evidences receipt on the noted date by the USPTO of the indicated documents, characterized by the applicant, and including page counts, where applicable. It serves as evidence of receipt similar to a Post Card, as described in MPEP 503.

New Applications Under 35 U.S.C. 111
If a new application is being filed and the application includes the necessary components for a filing date (see 37 CFR 1.53(b)-(d) and MPEP 506), a Filing Receipt (37 CFR 1.54) will be issued in due course and the date shown on this Acknowledgement Receipt will establish the filing date of the application.

National Stage of an International Application under 35 U.S.C. 371
If a timely submission to enter the national stage of an international application is compliant with the conditions of 35 U.S.C. 371 and other applicable requirements a Form PCT/DO/EO/903 indicating acceptance of the application as a national stage submission under 35 U.S.C. 371 will be issued in addition to the Filing Receipt, in due course.

New International Application Filed with the USPTO as a Receiving Office
If a new international application is being filed and the international application includes the necessary components for an international filing date (see PCT Article 11 and MPEP 1810), a Notification of the International Application Number and of the International Filing Date (Form PCT/RO/105) will be issued in due course, subject to prescriptions concerning national security, and the date shown on this Acknowledgement Receipt will establish the international filing date of the application.

PTO/SB/08a (01-10)
Approved for use through 07/31/2012. OMB 0651-0031
U.S. Patent and Trademark Office; U.S. DEPARTMENT OF COMMERCE
Under the Paperwork Reduction Act of 1995, no persons are required to respond to a collection of information unless it contains a valid OMB control number.

INFORMATION DISCLOSURE STATEMENT BY APPLICANT (Not for submission under 37 CFR 1.99)		
	Application Number	
	Filing Date	2014-01-27
	First Named Inventor	Michael J. Schuster
	Art Unit	TBD
	Examiner Name	TBD
	Attorney Docket Number	171401-1034

U.S.PATENTS						Remove
Examiner Initial*	Cite No	Patent Number	Kind Code[1]	Issue Date	Name of Patentee or Applicant of cited Document	Pages,Columns,Lines where Relevant Passages or Relevant Figures Appear
	1	1787601		1931-01-06	Swanberg	
	2	2087503		1937-07-20	Clemmons	
	3	2512176		1950-06-20	Shaffer	
	4	2791235		1957-05-07	Smith	
	5	3040769		1962-06-26	Lamb	
	6	3086546		1963-04-23	Brown	
	7	3172128		1965-03-09	Ducey	
	8	3457947		1969-07-29	Fitzgerald	

INFORMATION DISCLOSURE STATEMENT BY APPLICANT (Not for submission under 37 CFR 1.99)		
	Application Number	
	Filing Date	2014-01-27
	First Named Inventor	Michael J. Schuster
	Art Unit	TBD
	Examiner Name	TBD
	Attorney Docket Number	171401-1034

	9	3744064		1973-07-10	Preston	
	10	4351071		1982-09-28	Clar	
	11	4700413		1987-10-20	Lopez	
	12	4770388		1988-09-13	Carman	
	13	5083323		1992-01-28	Cannan	
	14	5228152		1993-07-20	Fraley	
	15	5232011		1993-08-03	Royalty	
	16	5327931		1994-07-12	Royalty	
	17	5442820		1995-08-22	Becker	
	18	5542448		1996-08-06	Campbell et al.	
	19	5742951		1998-04-28	Wright et al.	

INFORMATION DISCLOSURE STATEMENT BY APPLICANT (Not for submission under 37 CFR 1.99)	Application Number	
	Filing Date	2014-01-27
	First Named Inventor	Michael J. Schuster
	Art Unit	TBD
	Examiner Name	TBD
	Attorney Docket Number	171401-1034

	20	5775366		1998-07-07	Ray	
	21	6219856	B1	2001-04-24	Alles	
	22	6385788	B1	2002-05-14	Wasielewski	
	23	0136128		1873-02-25	Bralley	
	24	0994746		1911-06-13	Dwyer et al.	
	25	0996743		1911-07-04	Yancey	
	26	1113057		1914-10-06	Schumann	
	27	2465866		1949-03-29	Gaines	
	28	2736037		1956-02-28	Hardie	
	29	2799865		1957-07-23	Schuster	
	30	3321972		1967-05-30	Goldtrap	

INFORMATION DISCLOSURE STATEMENT BY APPLICANT (Not for submission under 37 CFR 1.99)	Application Number	
	Filing Date	2014-01-27
	First Named Inventor	Michael J. Schuster
	Art Unit	TBD
	Examiner Name	TBD
	Attorney Docket Number	171401-1034

	31	3762395		1973-10-02	Taylor	
	32	4134164		1979-01-16	Sanmartin Rial	
	33	4505231		1985-03-19	Syler	
	34	4527295		1985-07-09	Lacore	
	35	4898124		1990-02-06	Granberg et al.	
	36	5794279		1998-08-18	Schwartz	
	37	5862537		1999-01-26	Osmond	
	38	6295660		2001-10-02	Schuster	
	39	3986216		1976-10-19	Davis et al.	
	40	3994628		1976-11-30	Kemper	
	41	4007498		1977-02-15	Pearson	

INFORMATION DISCLOSURE STATEMENT BY APPLICANT (Not for submission under 37 CFR 1.99)		
	Application Number	
	Filing Date	2014-01-27
	First Named Inventor	Michael J. Schuster
	Art Unit	TBD
	Examiner Name	TBD
	Attorney Docket Number	171401-1034

	42	4017916		1977-04-19	Pearson	
	43	4032822		1977-06-28	Un	
	44	4090532		1978-05-23	Story, Jr.	
	45	4145775		1979-03-27	Butler	
	46	4392260		1983-07-12	Bensen	
	47	4707867		1987-11-24	Kawabe et al.	
	48	4764996		1988-08-23	Pino	
	49	4793588		1988-12-27	Laverty, Jr.	
	50	4918764		1990-04-24	Haselswerdt et al.	
	51	4980932		1991-01-01	Stemples	
	52	5007452		1991-04-16	Antunez	

INFORMATION DISCLOSURE STATEMENT BY APPLICANT (Not for submission under 37 CFR 1.99)		
	Application Number	
	Filing Date	2014-01-27
	First Named Inventor	Michael J. Schuster
	Art Unit	TBD
	Examiner Name	TBD
	Attorney Docket Number	171401-1034

	53	5036553		1991-08-06	Sanderson	
	54	5052060		1991-10-01	Makita et al.	
	55	5134729		1992-08-04	Shaw	
	56	5245710		1993-09-21	Haselswerdt et al.	
	57	5362026		1994-11-08	Kobayashi et al.	
	58	5432959		1995-07-18	Ellsworth et al.	
	59	5469586		1995-11-28	Tsutsui et al.	
	60	5708991		1998-01-20	DeMarco	
	61	5715860		1998-02-10	Horad	
	62	6202227	B1	2001-03-20	Gurowitz	
	63	6209576	B1	2001-04-03	Davis	

INFORMATION DISCLOSURE STATEMENT BY APPLICANT (Not for submission under 37 CFR 1.99)	Application Number	
	Filing Date	2014-01-27
	First Named Inventor	Michael J. Schuster
	Art Unit	TBD
	Examiner Name	TBD
	Attorney Docket Number	171401-1034

	64	6263519	B1	2001-07-24	Parsons et al.	
	65	6560790	B2	2003-05-13	Saar et al.	
	66	4420845		1983-12-20	Antunez	
	67	6823889		2004-11-30	Schuster	
	68	6409221	B1	2002-06-25	Robinson et al.	
	69	5926868	A	1999-07-27	Bjerke, Thomas E.	
	70	5624073		1997-04-29	Mueller et al.	
	71	6047725		2000-04-11	Gish et al.	
If you wish to add additional U.S. Patent citation information please click the Add button.						Add
U.S.PATENT APPLICATION PUBLICATIONS						Remove
Examiner Initial*	Cite No	Publication Number	Kind Code[1]	Publication Date	Name of Patentee or Applicant of cited Document	Pages,Columns,Lines where Relevant Passages or Relevant Figures Appear
	1	20020092090	A1	2002-07-18	Johnson	

EFS Web 2.1.17

INFORMATION DISCLOSURE STATEMENT BY APPLICANT (Not for submission under 37 CFR 1.99)	Application Number	
	Filing Date	2014-01-27
	First Named Inventor	Michael J. Schuster
	Art Unit	TBD
	Examiner Name	TBD
	Attorney Docket Number	171401-1034

	2	20020162166	A1	2002-11-07	Saar et al.		

If you wish to add additional U.S. Published Application citation information please click the Add button. Add

FOREIGN PATENT DOCUMENTS Remove

Examiner Initial*	Cite No	Foreign Document Number[3]	Country Code[2] ¡	Kind Code[4]	Publication Date	Name of Patentee or Applicant of cited Document	Pages,Columns,Lines where Relevant Passages or Relevant Figures Appear	T[5]
	1							☐

If you wish to add additional Foreign Patent Document citation information please click the Add button Add

NON-PATENT LITERATURE DOCUMENTS Remove

Examiner Initials*	Cite No	Include name of the author (in CAPITAL LETTERS), title of the article (when appropriate), title of the item (book, magazine, journal, serial, symposium, catalog, etc), date, pages(s), volume-issue number(s), publisher, city and/or country where published.	T[5]
	1	US Patent 6,823,889, File History, 2004-2005 Great-Great-Grandparent Patent to this Application (copy not attached).	☐
	2	US Patent 7,743,436, File History, 2004-2010 Great-Grandparent Patent to this Application (copy not attached).	☐
	3	US Patent 8,104,105, File History, (2010-2012) Grandparent to this Application (copy not attached).	☐
	4	US Application 13/346,355 File History (2012-2014) Parent to this Application (copy not attached).	☐

If you wish to add additional non-patent literature document citation information please click the Add button Add

EXAMINER SIGNATURE

Examiner Signature		Date Considered	

*EXAMINER: Initial if reference considered, whether or not citation is in conformance with MPEP 609. Draw line through a citation if not in conformance and not considered. Include copy of this form with next communication to applicant.

EFS Web 2.1.17

INFORMATION DISCLOSURE STATEMENT BY APPLICANT (Not for submission under 37 CFR 1.99)	Application Number	
	Filing Date	2014-01-27
	First Named Inventor	Michael J. Schuster
	Art Unit	TBD
	Examiner Name	TBD
	Attorney Docket Number	171401-1034

[1] See Kind Codes of USPTO Patent Documents at www.USPTO.GOV or MPEP 901.04. [2] Enter office that issued the document, by the two-letter code (WIPO Standard ST.3). [3] For Japanese patent documents, the indication of the year of the reign of the Emperor must precede the serial number of the patent document. [4] Kind of document by the appropriate symbols as indicated on the document under WIPO Standard ST.16 if possible. [5] Applicant is to place a check mark here if English language translation is attached.

INFORMATION DISCLOSURE STATEMENT BY APPLICANT (Not for submission under 37 CFR 1.99)	Application Number	
	Filing Date	2014-01-27
	First Named Inventor	Michael J. Schuster
	Art Unit	TBD
	Examiner Name	TBD
	Attorney Docket Number	171401-1034

CERTIFICATION STATEMENT

Please see 37 CFR 1.97 and 1.98 to make the appropriate selection(s):

☐ That each item of information contained in the information disclosure statement was first cited in any communication from a foreign patent office in a counterpart foreign application not more than three months prior to the filing of the information disclosure statement. See 37 CFR 1.97(e)(1).

OR

☐ That no item of information contained in the information disclosure statement was cited in a communication from a foreign patent office in a counterpart foreign application, and, to the knowledge of the person signing the certification after making reasonable inquiry, no item of information contained in the information disclosure statement was known to any individual designated in 37 CFR 1.56(c) more than three months prior to the filing of the information disclosure statement. See 37 CFR 1.97(e)(2).

☐ See attached certification statement.

☐ Fee set forth in 37 CFR 1.17 (p) has been submitted herewith.

☒ None

SIGNATURE

A signature of the applicant or representative is required in accordance with CFR 1.33, 10.18. Please see CFR 1.4(d) for the form of the signature.

Signature	/RDG/	Date (YYYY-MM-DD)	2014-01-27
Name/Print	Robert D. Gravois	Registration Number	67244

This collection of information is required by 37 CFR 1.97 and 1.98. The information is required to obtain or retain a benefit by the public which is to file (and by the USPTO to process) an application. Confidentiality is governed by 35 U.S.C. 122 and 37 CFR 1.14. This collection is estimated to take 1 hour to complete, including gathering, preparing and submitting the completed application form to the USPTO. Time will vary depending upon the individual case. Any comments on the amount of time you require to complete this form and/or suggestions for reducing this burden, should be sent to the Chief Information Officer, U.S. Patent and Trademark Office, U.S. Department of Commerce, P.O. Box 1450, Alexandria, VA 22313-1450. DO NOT SEND FEES OR COMPLETED FORMS TO THIS ADDRESS. **SEND TO: Commissioner for Patents, P.O. Box 1450, Alexandria, VA 22313-1450.**

Privacy Act Statement

The Privacy Act of 1974 (P.L. 93-579) requires that you be given certain information in connection with your submission of the attached form related to a patent application or patent. Accordingly, pursuant to the requirements of the Act, please be advised that: (1) the general authority for the collection of this information is 35 U.S.C. 2(b)(2); (2) furnishing of the information solicited is voluntary; and (3) the principal purpose for which the information is used by the U.S. Patent and Trademark Office is to process and/or examine your submission related to a patent application or patent. If you do not furnish the requested information, the U.S. Patent and Trademark Office may not be able to process and/or examine your submission, which may result in termination of proceedings or abandonment of the application or expiration of the patent.

The information provided by you in this form will be subject to the following routine uses:

1. The information on this form will be treated confidentially to the extent allowed under the Freedom of Information Act (5 U.S.C. 552) and the Privacy Act (5 U.S.C. 552a). Records from this system of records may be disclosed to the Department of Justice to determine whether the Freedom of Information Act requires disclosure of these record s.

2. A record from this system of records may be disclosed, as a routine use, in the course of presenting evidence to a court, magistrate, or administrative tribunal, including disclosures to opposing counsel in the course of settlement negotiations.

3. A record in this system of records may be disclosed, as a routine use, to a Member of Congress submitting a request involving an individual, to whom the record pertains, when the individual has requested assistance from the Member with respect to the subject matter of the record.

4. A record in this system of records may be disclosed, as a routine use, to a contractor of the Agency having need for the information in order to perform a contract. Recipients of information shall be required to comply with the requirements of the Privacy Act of 1974, as amended, pursuant to 5 U.S.C. 552a(m).

5. A record related to an International Application filed under the Patent Cooperation Treaty in this system of records may be disclosed, as a routine use, to the International Bureau of the World Intellectual Property Organization, pursuant to the Patent Cooperation Treaty.

6. A record in this system of records may be disclosed, as a routine use, to another federal agency for purposes of National Security review (35 U.S.C. 181) and for review pursuant to the Atomic Energy Act (42 U.S.C. 218(c)).

7. A record from this system of records may be disclosed, as a routine use, to the Administrator, General Services, or his/her designee, during an inspection of records conducted by GSA as part of that agency's responsibility to recommend improvements in records management practices and programs, under authority of 44 U.S.C. 2904 and 2906. Such disclosure shall be made in accordance with the GSA regulations governing inspection of records for this purpose, and any other relevant (i.e., GSA or Commerce) directive. Such disclosure shall not be used to make determinations about individuals.

8. A record from this system of records may be disclosed, as a routine use, to the public after either publication of the application pursuant to 35 U.S.C. 122(b) or issuance of a patent pursuant to 35 U.S.C. 151. Further, a record may be disclosed, subject to the limitations of 37 CFR 1.14, as a routine use, to the public if the record was filed in an application which became abandoned or in which the proceedings were terminated and which application is referenced by either a published application, an application open to public inspections or an issued patent.

9. A record from this system of records may be disclosed, as a routine use, to a Federal, State, or local law enforcement agency, if the USPTO becomes aware of a violation or potential violation of law or regulation.

IN THE UNITED STATES PATENT AND TRADEMARK OFFICE

In Re Application of:

Schuster, et al.

Serial No.: **TBD**

Filed: **Herewithin**

For: **Toilet Fill Valve**

Confirmation No.: **TBD**

Group Art Unit: **TBD**

Examiner: **TBD**

Docket No. **171401-1034**

INFORMATION DISCLOSURE STATEMENT

Mail Stop Amendment
Commissioner for Patents
P.O. Box 1450
Alexandria, Virginia 22313-1450

Sir:

This information disclosure statement is filed in accordance with 37 C.F.R. §§ 1.56, 1.97, and 1.98. Listed on the accompanying form SB_08(a) are documents which may or may not be considered material to the examination of this application. These documents were made of record in a prior application filed January 9, 2012 and having serial no. 13/346,355, to which priority is claimed relative to the present application pursuant to 35 U.S.C. §120. Copies of these documents are not being provided pursuant to 37 C.F.R. § 1.98(d)(1) and (2), which provides:

> (d) A copy of any patent, publication, pending U.S. application or other information, as specified in paragraph (a) of this section, listed in an information disclosure statement is required to be provided, even if the patent, publication, pending U.S. application or other information was previously submitted to, or cited by, the Office in an earlier application, unless:
>
> (1) The application is properly identified in the information disclosure statement and is relied on for an earlier effective filing date under 35 U.S.C. §120; and

(2) The information disclosure statement submitted in the earlier application complies with a paragraphs (a) through (c) of this section.

The following rights are reserved by the Applicant(s): the right to establish the patentability of the claimed invention over any of the listed documents should they be applied as reference, the right to prove that some of these documents may not be prior art, and/or the right to prove that some of these documents may not be enabling for the teachings they purport to offer.

This statement should not be construed as a representation that an exhaustive search has been made, or that information more material to the examination of the present application does not exist. The Examiner is specifically requested not to rely solely on the materials submitted herewith. The Examiner is requested to conduct an independent and thorough review of the documents, and to form independent opinions as to their significance.

It is respectfully requested that the Examiner initial and return a copy of the enclosed PTO-1449 to indicate the documents have been considered.

Respectfully submitted,

THOMAS | HORSTEMEYER, LLP

By: /RDG/
Robert D. Gravois; Reg. No. 67,224

400 Interstate North Parkway, Suite 1500
Atlanta, Georgia 30339-5948
770-933-9500

Electronic Patent Application Fee Transmittal

Application Number:	
Filing Date:	
Title of Invention:	Toilet Fill Valve
First Named Inventor/Applicant Name:	Michael J. Schuster
Filer:	Robert D. Gravois/Stephanie Davy-Jow
Attorney Docket Number:	171401-1034

Filed as Large Entity

Utility under 35 USC 111(a) Filing Fees

Description	Fee Code	Quantity	Amount	Sub-Total in USD($)
Basic Filing:				
Utility application filing	1011	1	280	280
Utility Search Fee	1111	1	600	600
Utility Examination Fee	1311	1	720	720
Pages:				
Claims:				
Miscellaneous-Filing:				
Late Filing Fee for Oath or Declaration	1051	1	140	140
Petition:				

Description	Fee Code	Quantity	Amount	Sub-Total in USD($)
Patent-Appeals-and-Interference:				
Post-Allowance-and-Post-Issuance:				
Extension-of-Time:				
Miscellaneous:				
			Total in USD ($)	**1740**

Electronic Acknowledgement Receipt	
EFS ID:	18029185
Application Number:	14164424
International Application Number:	
Confirmation Number:	2529
Title of Invention:	Toilet Fill Valve
First Named Inventor/Applicant Name:	Michael J. Schuster
Customer Number:	24504
Filer:	Robert D. Gravois/Stephanie Davy-Jow
Filer Authorized By:	Robert D. Gravois
Attorney Docket Number:	171401-1034
Receipt Date:	27-JAN-2014
Filing Date:	
Time Stamp:	12:44:57
Application Type:	Utility under 35 USC 111(a)

Payment information:

Submitted with Payment	yes
Payment Type	Credit Card
Payment was successfully received in RAM	$1740
RAM confirmation Number	11264
Deposit Account	200778
Authorized User	D'AURELIO, MICHAEL J

The Director of the USPTO is hereby authorized to charge indicated fees and credit any overpayment as follows:

Charge any Additional Fees required under 37 C.F.R. Section 1.17 (Patent application and reexamination processing fees)

Charge any Additional Fees required under 37 C.F.R. Section 1.21 (Miscellaneous fees and charges)

File Listing:

Document Number	Document Description	File Name	File Size(Bytes)/ Message Digest	Multi Part /.zip	Pages (if appl.)
1	Application Data Sheet	01957289.PDF	1566170 04fe408a6752a0f584383685e35085d7c4f293d0	no	7
Warnings:					
Information:					
2		01967446.PDF	117461 ce9d749467828a6741882a68e907b0f0a549ba14	yes	26

Multipart Description/PDF files in .zip description

Document Description	Start	End
Specification	1	20
Claims	21	25
Abstract	26	26

Document Number	Document Description	File Name	File Size(Bytes)/ Message Digest	Multi Part /.zip	Pages (if appl.)
Warnings:					
Information:					
3	Drawings-only black and white line drawings	01958961.PDF	78829 46fb6e5e28b1364ed7d5ad38798bf7aa26ebe299	no	9
Warnings:					
Information:					
4	Information Disclosure Statement (IDS) Form (SB08)	01967450.PDF	616919 bb15b94c8a8341e8f7100f1ff6c3631fe23d105d	no	11
Warnings:					
Information:					
5	Transmittal Letter	01967508.PDF	74333 5b99d8c8ec6bcab85b9c5c8f705010b92549594d	no	2
Warnings:					
Information:					
6	Fee Worksheet (SB06)	fee-info.pdf	36349 5e5d784b306db683edc6a20862d5f0a96a39563f	no	2
Warnings:					
Information:					
		Total Files Size (in bytes):	2490061		

This Acknowledgement Receipt evidences receipt on the noted date by the USPTO of the indicated documents, characterized by the applicant, and including page counts, where applicable. It serves as evidence of receipt similar to a Post Card, as described in MPEP 503.

New Applications Under 35 U.S.C. 111
If a new application is being filed and the application includes the necessary components for a filing date (see 37 CFR 1.53(b)-(d) and MPEP 506), a Filing Receipt (37 CFR 1.54) will be issued in due course and the date shown on this Acknowledgement Receipt will establish the filing date of the application.

National Stage of an International Application under 35 U.S.C. 371
If a timely submission to enter the national stage of an international application is compliant with the conditions of 35 U.S.C. 371 and other applicable requirements a Form PCT/DO/EO/903 indicating acceptance of the application as a national stage submission under 35 U.S.C. 371 will be issued in addition to the Filing Receipt, in due course.

New International Application Filed with the USPTO as a Receiving Office
If a new international application is being filed and the international application includes the necessary components for an international filing date (see PCT Article 11 and MPEP 1810), a Notification of the International Application Number and of the International Filing Date (Form PCT/RO/105) will be issued in due course, subject to prescriptions concerning national security, and the date shown on this Acknowledgement Receipt will establish the international filing date of the application.

PTO/AIA/14 (12-13)
Approved for use through 01/31/2014. OMB 0651-0032
U.S. Patent and Trademark Office; U.S. DEPARTMENT OF COMMERCE
Under the Paperwork Reduction Act of 1995, no persons are required to respond to a collection of information unless it contains a valid OMB control number.

Application Data Sheet 37 CFR 1.76	Attorney Docket Number	171401-1034
	Application Number	
Title of Invention	Toilet Fill Valve	

The application data sheet is part of the provisional or nonprovisional application for which it is being submitted. The following form contains the bibliographic data arranged in a format specified by the United States Patent and Trademark Office as outlined in 37 CFR 1.76.
This document may be completed electronically and submitted to the Office in electronic format using the Electronic Filing System (EFS) or the document may be printed and included in a paper filed application.

Secrecy Order 37 CFR 5.2

☐ Portions or all of the application associated with this Application Data Sheet may fall under a Secrecy Order pursuant to 37 CFR 5.2 (Paper filers only. Applications that fall under Secrecy Order may not be filed electronically.)

Inventor Information:

Inventor 1 Remove

Legal Name

Prefix	Given Name	Middle Name	Family Name	Suffix
	Michael	J.	Schuster	

Residence Information (Select One) ◉ US Residency ◯ Non US Residency ◯ Active US Military Service

City	Shorewood	State/Province	IL	Country of Residence i	US

Mailing Address of Inventor:

Address 1	501 Earl Road		
Address 2			
City	Shorewood	State/Province	IL
Postal Code	60404	Country i	US

Inventor 2 Remove

Legal Name

Prefix	Given Name	Middle Name	Family Name	Suffix
	Larry		Schneider	

Residence Information (Select One) ◉ US Residency ◯ Non US Residency ◯ Active US Military Service

City	Wadsworth	State/Province	IL	Country of Residence i	US

Mailing Address of Inventor:

Address 1	39155 N. Pine Grove Avenue		
Address 2			
City	Wadsworth	State/Province	IL
Postal Code	60083	Country i	US

All Inventors Must Be Listed - Additional Inventor Information blocks may be generated within this form by selecting the **Add** button. Add

Correspondence Information:

Enter either Customer Number or complete the Correspondence Information section below.
For further information see 37 CFR 1.33(a).

PTO/AIA/14 (12-13)
Approved for use through 01/31/2014. OMB 0651-0032
U.S. Patent and Trademark Office; U.S. DEPARTMENT OF COMMERCE
Under the Paperwork Reduction Act of 1995, no persons are required to respond to a collection of information unless it contains a valid OMB control number.

Application Data Sheet 37 CFR 1.76	Attorney Docket Number	171401-1034
	Application Number	
Title of Invention	Toilet Fill Valve	

☐ **An Address is being provided for the correspondence Information of this application.**			
Customer Number	24504		
Email Address	Mike.daurelio@thomashorstemeyer.com	Add Email	Remove Email

Application Information:

Title of the Invention	Toilet Fill Valve		
Attorney Docket Number	171401-1034	**Small Entity Status Claimed**	☐
Application Type	Nonprovisional		
Subject Matter	Utility		
Total Number of Drawing Sheets (if any)	9	**Suggested Figure for Publication (if any)**	

Filing By Reference :

Only compete this section when filing an application by reference under 35 U.S.C. 111(c) and 37 CFR 1.57(a). Do not complete this section if application papers including a specification and any drawings are being filed. Any domestic benefit or foreign priority information must be provided in the appropriate section(s) below (i.e., "Domestic Benefit/National Stage Information" and "Foreign Priority Information").

For the purposes of a filing date under 37 CFR 1.53(b), the description and any drawings of the present application are replaced by this reference to the previously filed application, subject to conditions and requirements of 37 CFR 1.57(a).

Application number of the previously filed application	Filing date (YYYY-MM-DD)	Intellectual Property Authority or Country

Publication Information:

☐ Request Early Publication (Fee required at time of Request 37 CFR 1.219)

☒ **Request Not to Publish.** I hereby request that the attached application not be published under 35 U.S.C. 122(b) and certify that the invention disclosed in the attached application **has not and will not** be the subject of an application filed in another country, or under a multilateral international agreement, that requires publication at eighteen months after filing.

Representative Information:

Representative information should be provided for all practitioners having a power of attorney in the application. Providing this information in the Application Data Sheet does not constitute a power of attorney in the application (see 37 CFR 1.32).
Either enter Customer Number or complete the Representative Name section below. If both sections are completed the customer Number will be used for the Representative Information during processing.

Please Select One:	◉ Customer Number	○ US Patent Practitioner	○ Limited Recognition (37 CFR 11.9)
Customer Number	24504		

Under the Paperwork Reduction Act of 1995, no persons are required to respond to a collection of information unless it contains a valid OMB control number.

Application Data Sheet 37 CFR 1.76	Attorney Docket Number	171401-1034
	Application Number	
Title of Invention	Toilet Fill Valve	

Domestic Benefit/National Stage Information:

This section allows for the applicant to either claim benefit under 35 U.S.C. 119(e), 120, 121, or 365(c) or indicate National Stage entry from a PCT application. Providing this information in the application data sheet constitutes the specific reference required by 35 U.S.C. 119(e) or 120, and 37 CFR 1.78.
When referring to the current application, please leave the application number blank.

Prior Application Status	Pending				Remove
Application Number	Continuity Type	Prior Application Number	Filing Date (YYYY-MM-DD)		
	Continuation of	13346355	2012-01-09		
Prior Application Status	Patented				Remove
Application Number	Continuity Type	Prior Application Number	Filing Date (YYYY-MM-DD)	Patent Number	Issue Date (YYYY-MM-DD)
13346355	Continuation of	12786904	2010-05-25	8104105	2012-01-31
Prior Application Status	Patented				Remove
Application Number	Continuity Type	Prior Application Number	Filing Date (YYYY-MM-DD)	Patent Number	Issue Date (YYYY-MM-DD)
12786904	Continuation of	10958797	2004-10-05	7743436	2010-06-29
Prior Application Status	Patented				Remove
Application Number	Continuity Type	Prior Application Number	Filing Date (YYYY-MM-DD)	Patent Number	Issue Date (YYYY-MM-DD)
10958797	Continuation in part of	10798606	2004-03-11	6823889	2004-11-30

Additional Domestic Benefit/National Stage Data may be generated within this form by selecting the **Add** button. Add

Foreign Priority Information:

This section allows for the applicant to claim priority to a foreign application. Providing this information in the application data sheet constitutes the claim for priority as required by 35 U.S.C. 119(b) and 37 CFR 1.55(d). When priority is claimed to a foreign application that is eligible for retrieval under the priority document exchange program (PDX) [i] the information will be used by the Office to automatically attempt retrieval pursuant to 37 CFR 1.55(h)(1) and (2). Under the PDX program, applicant bears the ultimate responsibility for ensuring that a copy of the foreign application is received by the Office from the participating foreign intellectual property office, or a certified copy of the foreign priority application is filed, within the time period specified in 37 CFR 1.55(g)(1).

Remove

Application Number	Country [i]	Filing Date (YYYY-MM-DD)	Access Code [i] (if applicable)

Additional Foreign Priority Data may be generated within this form by selecting the **Add** button. Add

Application Data Sheet 37 CFR 1.76		Attorney Docket Number	171401-1034
		Application Number	
Title of Invention	Toilet Fill Valve		

Statement under 37 CFR 1.55 or 1.78 for AIA (First Inventor to File) Transition Applications

☐ This application (1) claims priority to or the benefit of an application filed before March 16, 2013 and (2) also contains, or contained at any time, a claim to a claimed invention that has an effective filing date on or after March 16, 2013.
NOTE: By providing this statement under 37 CFR 1.55 or 1.78, this application, with a filing date on or after March 16, 2013, will be examined under the first inventor to file provisions of the AIA.

Authorization to Permit Access:

☐ Authorization to Permit Access to the Instant Application by the Participating Offices

If checked, the undersigned hereby grants the USPTO authority to provide the European Patent Office (EPO), the Japan Patent Office (JPO), the Korean Intellectual Property Office (KIPO), the World Intellectual Property Office (WIPO), and any other intellectual property offices in which a foreign application claiming priority to the instant patent application is filed access to the instant patent application. See 37 CFR 1.14(c) and (h). This box should not be checked if the applicant does not wish the EPO, JPO, KIPO, WIPO, or other intellectual property office in which a foreign application claiming priority to the instant patent application is filed to have access to the instant patent application.

In accordance with 37 CFR 1.14(h)(3), access will be provided to a copy of the instant patent application with respect to: 1) the instant patent application-as-filed; 2) any foreign application to which the instant patent application claims priority under 35 U.S.C. 119(a)-(d) if a copy of the foreign application that satisfies the certified copy requirement of 37 CFR 1.55 has been filed in the instant patent application; and 3) any U.S. application-as-filed from which benefit is sought in the instant patent application.

In accordance with 37 CFR 1.14(c), access may be provided to information concerning the date of filing this Authorization.

Applicant Information:

Providing assignment information in this section does not substitute for compliance with any requirement of part 3 of Title 37 of CFR to have an assignment recorded by the Office.

Under the Paperwork Reduction Act of 1995, no persons are required to respond to a collection of information unless it contains a valid OMB control number.

Application Data Sheet 37 CFR 1.76	Attorney Docket Number	171401-1034
	Application Number	
Title of Invention	Toilet Fill Valve	

Applicant 1 Remove

If the applicant is the inventor (or the remaining joint inventor or inventors under 37 CFR 1.45), this section should not be completed. The information to be provided in this section is the name and address of the legal representative who is the applicant under 37 CFR 1.43; or the name and address of the assignee, person to whom the inventor is under an obligation to assign the invention, or person who otherwise shows sufficient proprietary interest in the matter who is the applicant under 37 CFR 1.46. If the applicant is an applicant under 37 CFR 1.46 (assignee, person to whom the inventor is obligated to assign, or person who otherwise shows sufficient proprietary interest) together with one or more joint inventors, then the joint inventor or inventors who are also the applicant should be identified in this section.

Clear

○ Assignee ○ Legal Representative under 35 U.S.C. 117 ○ Joint Inventor

◉ Person to whom the inventor is obligated to assign. ○ Person who shows sufficient proprietary interest

If applicant is the legal representative, indicate the authority to file the patent application, the inventor is:

Name of the Deceased or Legally Incapacitated Inventor :

If the Applicant is an Organization check here. ☒

Organization Name	Danco, Inc.		
Mailing Address Information:			
Address 1	2727 Chemsearch Blvd.		
Address 2			
City	Irving	**State/Province**	TX
Country i	US	Postal Code	75062
Phone Number		Fax Number	
Email Address			

Additional Applicant Data may be generated within this form by selecting the Add button. Add

Assignee Information including Non-Applicant Assignee Information:

Providing assignment information in this section does not subsitute for compliance with any requirement of part 3 of Title 37 of CFR to have an assignment recorded by the Office.

Assignee 1

Complete this section if assignee information, including non-applicant assignee information, is desired to be included on the patent application publication . An assignee-applicant identified in the "Applicant Information" section will appear on the patent application publication as an applicant. For an assignee-applicant, complete this section only if identification as an assignee is also desired on the patent application publication.

Remove

If the Assignee or Non-Applicant Assignee is an Organization check here. ☐

Under the Paperwork Reduction Act of 1995, no persons are required to respond to a collection of information unless it contains a valid OMB control number.

Application Data Sheet 37 CFR 1.76	Attorney Docket Number	171401-1034
	Application Number	
Title of Invention	Toilet Fill Valve	

Prefix	**Given Name**	Middle Name	**Family Name**	Suffix

Mailing Address Information For Assignee including Non-Applicant Assignee:

Address 1			
Address 2			
City		**State/Province**	
Country i		Postal Code	
Phone Number		Fax Number	
Email Address			

Additional Assignee or Non-Applicant Assignee Data may be generated within this form by selecting the Add button. Add

Signature:

Remove

NOTE: This form must be signed in accordance with 37 CFR 1.33. See 37 CFR 1.4 for signature requirements and certifications

Signature	/RDG/			Date (YYYY-MM-DD)	2014-01-27
First Name	Robert D.	Last Name	Gravois	Registration Number	67224

Additional Signature may be generated within this form by selecting the Add button. Add

This collection of information is required by 37 CFR 1.76. The information is required to obtain or retain a benefit by the public which is to file (and by the USPTO to process) an application. Confidentiality is governed by 35 U.S.C. 122 and 37 CFR 1.14. This collection is estimated to take 23 minutes to complete, including gathering, preparing, and submitting the completed application data sheet form to the USPTO. Time will vary depending upon the individual case. Any comments on the amount of time you require to complete this form and/or suggestions for reducing this burden, should be sent to the Chief Information Officer, U.S. Patent and Trademark Office, U.S. Department of Commerce, P.O. Box 1450, Alexandria, VA 22313-1450. DO NOT SEND FEES OR COMPLETED FORMS TO THIS ADDRESS. **SEND TO: Commissioner for Patents, P.O. Box 1450, Alexandria, VA 22313-1450.**

Privacy Act Statement

The Privacy Act of 1974 (P.L. 93-579) requires that you be given certain information in connection with your submission of the attached form related to a patent application or patent. Accordingly, pursuant to the requirements of the Act, please be advised that: (1) the general authority for the collection of this information is 35 U.S.C. 2(b)(2); (2) furnishing of the information solicited is voluntary; and (3) the principal purpose for which the information is used by the U.S. Patent and Trademark Office is to process and/or examine your submission related to a patent application or patent. If you do not furnish the requested information, the U.S. Patent and Trademark Office may not be able to process and/or examine your submission, which may result in termination of proceedings or abandonment of the application or expiration of the patent.

The information provided by you in this form will be subject to the following routine uses:

1. The information on this form will be treated confidentially to the extent allowed under the Freedom of Information Act (5 U.S.C. 552) and the Privacy Act (5 U.S.C. 552a). Records from this system of records may be disclosed to the Department of Justice to determine whether the Freedom of Information Act requires disclosure of these records.

2. A record from this system of records may be disclosed, as a routine use, in the course of presenting evidence to a court, magistrate, or administrative tribunal, including disclosures to opposing counsel in the course of settlement negotiations.

3. A record in this system of records may be disclosed, as a routine use, to a Member of Congress submitting a request involving an individual, to whom the record pertains, when the individual has requested assistance from the Member with respect to the subject matter of the record.

4. A record in this system of records may be disclosed, as a routine use, to a contractor of the Agency having need for the information in order to perform a contract. Recipients of information shall be required to comply with the requirements of the Privacy Act of 1974, as amended, pursuant to 5 U.S.C. 552a(m).

5. A record related to an International Application filed under the Patent Cooperation Treaty in this system of records may be disclosed, as a routine use, to the International Bureau of the World Intellectual Property Organization, pursuant to the Patent Cooperation Treaty.

6. A record in this system of records may be disclosed, as a routine use, to another federal agency for purposes of National Security review (35 U.S.C. 181) and for review pursuant to the Atomic Energy Act (42 U.S.C. 218(c)).

7. A record from this system of records may be disclosed, as a routine use, to the Administrator, General Services, or his/her designee, during an inspection of records conducted by GSA as part of that agency's responsibility to recommend improvements in records management practices and programs, under authority of 44 U.S.C. 2904 and 2906. Such disclosure shall be made in accordance with the GSA regulations governing inspection of records for this purpose, and any other relevant (i.e., GSA or Commerce) directive. Such disclosure shall not be used to make determinations about individuals.

8. A record from this system of records may be disclosed, as a routine use, to the public after either publication of the application pursuant to 35 U.S.C. 122(b) or issuance of a patent pursuant to 35 U.S.C. 151. Further, a record may be disclosed, subject to the limitations of 37 CFR 1.14, as a routine use, to the public if the record was filed in an application which became abandoned or in which the proceedings were terminated and which application is referenced by either a published application, an application open to public inspections or an issued patent.

9. A record from this system of records may be disclosed, as a routine use, to a Federal, State, or local law enforcement agency, if the USPTO becomes aware of a violation or potential violation of law or regulation.

TOILET FILL VALVE

CROSS REFERENCE TO RELATED APPLICATIONS

[0001] The present patent application is a Continuation Application of, and claims priority to, U.S. Patent Application entitled “Toilet Fill Valve with Adjustable Bowl Fill Flow” filed on January 09, 2012 and assigned Serial Number 13/346,355, which is a Continuation Application of, and claims priority to, U.S. Patent Application entitled “Toilet Fill Valve with Adjustable Bowl Fill Flow” filed on May 25, 2010 and assigned Serial Number 12/786,904, which is a Continuation Application of, and claims priority to, U.S. Patent Number 7,743,436 entitled “Toilet Fill Valve with Adjustable Bowl Fill Flow” filed on October 5, 2004, which is a Continuation-in-Part Application of, and claims priority to, U.S. Patent Number 6,823,889 entitled "Toilet Fill Valve with Adjustable Bowl Fill Flow" filed on March 11, 2004.

BACKGROUND

[0002] A toilet fill valve in a toilet typically includes a water outlet that provides water for refilling a toilet bowl during a flush cycle. Unfortunately, the water flowing out of such conventional water outlets to fill a toilet bowl provide much more water than is necessary to fill the average toilet bowl. Consequently, much of the water that flows into a toilet bowl during the average flush cycle is lost down the drain. This translates into a loss of millions of gallons of water each year.

BRIEF DESCRIPTION OF THE SEVERAL VIEWS OF THE DRAWINGS

[0003] The invention can be understood with reference to the following drawings. The components in the drawings are not necessarily to scale. Also, in the drawings, like reference numerals designate corresponding parts throughout the several views.

[0004] FIG. 1 is a drawing of a side view of a toilet fill valve according to an embodiment of the present invention;

[0005] FIG. 2 is a drawing of a top view of the toilet fill valve of FIG. 1;

[0006] FIG. 3 is a drawing of a cutaway view of a toilet tank within which the toilet fill valve of FIG. 1 is installed;

[0007] FIG. 4 is a drawing of a side view of a toilet fill valve according to an embodiment of the present invention;

[0008] FIGS. 5A and 5B are drawings that illustrate one example of a coupling of a bowl fill valve to the toilet fill valve of FIG. 4 according to an embodiment of the present invention;

[0009] FIGS. 6A, 6B, and 6C are drawings that illustrate another example of a coupling of a bowl fill valve to the toilet fill valve of FIG. 4 according to an embodiment of the present invention;

[0010] FIG. 7 is a drawing that illustrates still another example of a coupling of a bowl fill valve to the toilet fill valve of FIG. 4 according to an embodiment of the present invention;

[0011] FIGS. 8A and 8B are drawings that illustrate an example of a bowl fill valve that is coupled to the toilet fill valve of FIG. 4 according to an embodiment of the present invention; and

[0012] FIGS. 9A and 9B are drawings that illustrate another example of a bowl fill valve that is coupled to the toilet fill valve of FIG. 4 according to an embodiment of the present invention.

DETAILED DESCRIPTION

[0013] With reference to FIG. 1, shown is a toilet fill valve 100 according to an embodiment of the present invention. The toilet fill valve 100 includes a water inlet 103 at the bottom of the toilet fill valve 100 that is configured to be coupled to a water source outside of a toilet tank within which the toilet fill valve 100 is installed. The toilet fill valve 100 includes one or more water outlets 106 that are configured to supply water into a toilet tank within which the toilet fill valve 100 is installed. The toilet fill valve 100 may be, for example, a pilot style fill valve. However, it is understood that the toilet fill valve 100 may be any style of fill valve such as, for example, a ballcock valve, *etc*. The toilet fill valve 100 also includes a bowl fill valve 109 according to an embodiment of the present invention. The bowl fill valve 109 includes a bowl fill valve inlet 113 and a bowl fill valve outlet 116. In addition, the bowl fill valve 109 includes a handle 119 that facilitates a manual adjustment of the bowl fill valve 109.

[0014] The bowl fill valve 109 is integral with the toilet fill valve 100. In this respect, the term “integral” refers to the fact that the bowl fill valve 109 and the toilet fill valve 100 comprise a single structure. In this respect, the bowl fill valve 109 may be

included within the body of the toilet fill valve 100 as a portion of the toilet fill valve 100 in a single piece construction. Specifically, the bowl fill valve 109 may be molded as a portion of the toilet fill valve 100 or it may be snapped or clamped into place, or it may be attached to the toilet fill valve 100 in some other manner, etc.

[0015] Within the toilet fill valve 100, the bowl fill valve inlet 113 is operatively coupled to the water inlet 103. In this respect, when the toilet fill valve 100 is open and water flows from the water inlet 103 to the water outlets 106 and into a toilet tank, an amount of water is also supplied to the bowl fill valve inlet 113 that flows through the bowl fill valve 109 and out the bowl fill valve outlet 116. By virtue of the manual setting of the handle 119 of the bowl fill valve 109, the flow of water through the bowl fill valve 109 is regulated. In this manner, the flow of water is regulated so that enough water flows out of the bowl fill valve 109 to fill a toilet bowl without wasting any water down a drain.

[0016] Thus, the bowl fill valve 109 is configured to supply an adjustable flow of water out of the bowl fill outlet 116 that is directed to a toilet bowl during a flush cycle of a toilet to fill the toilet bowl. The flow of water is adjusted so that just enough flows out of bowl fill valve 109 so as to fill the toilet bowl without wasting any water.

[0017] The toilet fill valve 100 includes a float 123 that is operatively coupled to an actuating arm (not shown) by a translating stem 126. The float 123 floats on the water within a toilet tank and, depending on the location of the float 123 along the toilet fill valve 100, the toilet fill valve 100 is open or closed as can be appreciated by those with ordinary skill in the art. The bowl fill valve 109 and the actuating arm (not shown) are each located on the toilet fill valve 100 so as to prevent any interference between

the bowl fill valve 109 and the translational stem 126 or the actuating arm as will be discussed.

[0018] According to an embodiment of the present invention, the bowl fill valve 109 may include a number of biased positions. In this respect, the movement of the handle 119 may cause the bowl fill valve 109 to move from one predefined biased position to other predefined biased positions. In this respect, various mechanisms such as tabs, snaps, or other position biasing structures may be employed. The biased positions of the bowl fill valve 109 help ensure that the bowl fill valve 109 remains in a given setting selected by a user by a manual manipulation of the handle 119 during the normal course of operation of the toilet fill valve 100. Thus, by virtue of the biased positions, the bowl fill valve 109 is prevented from moving out of a desired position set by a user over a long period of use due to vibration and other factors as can be appreciated by those with ordinary skill in the art.

[0019] The bowl fill valve 109 may be, for example, a ball valve, a gate valve, a globe valve, a plug valve, a diaphragm valve, a butterfly valve, a needle valve, a sliding gate, a quick turn valve, a knife valve or any other appropriate type of valve as can be appreciated by those with ordinary skill in the art.

[0020] To operate the toilet fill valve 100, the toilet fill valve 100 is first installed within a toilet tank. When a toilet is flushed and the tank is drained, the float 123 moves downward along the toilet fill valve 100 and, consequently, the toilet fill valve 100 opens to allow water to flow from the water inlet 103 and out the water outlets 106 into a toilet tank. At the same time, water flows into the bowl fill valve inlet 113 and out the bowl fill valve outlet 116 through the bowl fill valve 109. Based on the setting of

the handle 119, the bowl fill valve 109 determines the precise flow rate of the water that flows out the bowl fill valve outlet 116. A tube is typically employed to direct the water flowing out the bowl fill valve outlet 116 to an overflow tube in the toilet tank. In this respect, the water flowing out the bowl fill valve outlet 116 refills the toilet bowl of the respective toilet.

[0021] Referring next to FIG. 2, shown is a top view of the toilet fill valve 100 according to an embodiment of the present invention. In this respect, the actuating arm 129 of the bowl fill valve 100 is seen with respect to the bowl fill valve 109. The actuating arm 129 is coupled to the float by way of the translational stem 126 (FIG. 1). In this respect, the actuating arm 129 extends in an orthogonal direction relative to a longitudinal axis 133 of the toilet fill valve 100. The longitudinal axis 133 is centered in the toilet fill valve 100 along the length of the toilet fill valve 100. Also, the bowl fill valve 109 extends in an orthogonal direction relative to the longitudinal axis 133 of the toilet fill valve 100. In order to prevent interference between the bowl fill valve 109 and the translational stem 126 or the actuating arm 129, the actuating arm 129 is angularly offset relative to the bowl fill valve 109 as shown. In this respect, the translational stem 126 is coupled to the free end of the actuating arm 129. By virtue of the angular offset between the bowl fill valve 109 and the actuating arm 129, the operation of the bowl fill valve 109 does not interfere with the operation of the toilet fill valve 100 itself by virtue of the fact that the float 123 (FIG. 1) can move freely with the movement of the translational stem 126 in order for proper operation of the toilet fill valve 100.

[0022] With reference to FIG. 3, shown is the toilet fill valve 100 as installed within a toilet tank 143 according to an embodiment of the present invention. In this

respect, the toilet fill valve 100 includes the water inlet 103 that is coupled to a water source outside of the toilet tank 143. The toilet fill valve 100 also includes one or more water outlets 106 that direct a flow of water into the toilet tank 143 during the operation of a flush cycle. The bowl fill valve 109 includes the bowl fill valve inlet (not shown) and the bowl fill valve outlet 116, where the bowl fill valve inlet is operatively coupled to the water inlet 103 as described above. Also, the bowl fill valve 109 is integrated with the body of the toilet fill valve 100 as described above.

[0023] A tube 146 is coupled to the bowl fill valve outlet 116 and is directed into the overflow tube 149 of the toilet tank 143. The tube 146 directs water that flows out of the bowl fill valve outlet 116 into the overflow tube 149 and refills the toilet bowl associated with the toilet tank 143 as can be appreciated by those with ordinary skill in the art. The bowl fill valve 109 is configured to supply the adjustable flow of water out the bowl fill valve outlet through the tube 146 and into the overflow tube 149 for filling the toilet bowl during the flush cycle of the toilet. In this respect, no pressure is seen within the tube 146. Specifically, the fact that the bowl fill valve 109 is integral with the toilet fill valve 100 prevents the creation of a pressure head in the tube 146 as would be the case if the bowl fill valve 109 were included in the middle of the tube 146. The fact that a pressure head is not created in any portion of the tube 146 prevents the tube 146 from working its way off of the bowl fill valve outlet 116 over time.

[0024] When installed, the bowl fill valve 109 is calibrated for the particular flush cycle of the toilet within which the toilet fill valve 100 is installed. To calibrate the bowl fill valve 109, a user first determines the water level in the toilet bowl when the toilet bowl is full of water. This gives the user a starting and an ending point for determining

when the toilet bowl of the respective toilet is full. Next, the bowl fill valve handle 109 is adjusted so that the bowl fill valve 109 is placed in a predefined position that allows a predefined flow of water to refill the toilet bowl. In this manner, one adjusts the actual flow of water that refills the toilet bowl. Thereafter, the user flushes the toilet itself. Next, the user determines if the flow of water into the toilet bowl by virtue of the adjustments made to the bowl fill valve 109 is adequate to refill the toilet bowl during the flush cycle. This may be determined, by identifying whether the level of the water in the toilet bowl reaches the full level determined at the beginning of the bowl fill valve calibration above.

[0025] The flow of water from the bowl fill valve 109 should be set so as to ensure that the water level in the toilet bowl reaches the full level at about the same time that the flush cycle ends. In other words, the level of water in the toilet bowl should reach its highest level at the same time that the flush cycle ends. This prevents any water from being lost down the drain associated with the toilet.

[0026] If the amount of water that flows into the toilet bowl is inadequate to refill the toilet bowl during the flush cycle as described above, then one should repeat the steps of adjusting the bowl fill valve, flushing the toilet, and then once again determining if the flow of water into the toilet bowl is adequate to refill the toilet bowl during a flush cycle.

[0027] Ultimately, during use of the toilet that includes the toilet fill valve 100 and the toilet tank 143, a user flushes the toilet and a predetermined flow of water exits the bowl fill valve outlet 116 and is directed into the toilet bowl. After the toilet tank has drained during the flush cycle, a flapper closes in the toilet tank and the toilet

tank refills. During the refilling of the tank, the water supplied by the bowl fill valve 109 fills the toilet bowl itself. The amount of water supplied by the bowl fill valve in the time it takes to refill the toilet tank should be approximately equal to the amount of water needed to fill the toilet bowl. By virtue of the fact that the bowl fill valve 100 is integrated within the toilet fill valve 100, a pressure head is prevented from being created due to any potential pinching of the tube 146 or other similar adjustment mechanism.

[0028] With reference to FIG. 4, shown is a toilet fill valve 200 according to another embodiment of the present invention. The toilet fill valve 200 includes the same water inlet 103 and the water outlets 106 as the toilet fill valve 100 (FIG. 1). The toilet fill valve 200 also includes the float 123 and the translational stem 126 as was described with reference to the toilet fill valve 100. In addition, the toilet fill valve 200 includes a bowl fill valve 203 that is integral with the toilet fill valve 200 as will be described. As stated above, the term “integral” refers to the fact that the bowl fill valve 200 and the toilet fill valve 100 comprise a single structure. In this embodiment, the bowl fill valve 200 is a separate component that is attached the body of the toilet fill valve 100, thereby forming the integral, single structure.

[0029] The toilet fill valve 200 also includes a bowl fill outlet port 206 that radially extends from a portion of a body 209 of the toilet fill valve 200. In this respect, the bowl fill outlet port is operatively coupled to the water inlet 103. In particular, when the toilet fill valve 200 is in an “on” state, water that flows in the water inlet 103 flows out of both the water outlets 106 and the bowl fill outlet port 206. The water flowing out of the bowl fill outlet port 206 flows through the bowl fill valve 203 as will be described.

[0030] The bowl fill valve 203 includes a bowl fill valve inlet port 213 and a bowl fill valve outlet port 216. The bowl fill valve inlet port 213 is compatible with the bowl fill outlet port 206, where the bowl fill valve inlet port 213 is coupled to the bowl fill outlet port 206 when the bowl fill valve 203 is coupled or affixed to the toilet fill valve 200. The bowl fill valve inlet port 213 is compatible with the bowl fill outlet port 206 in the sense that both the bowl fill valve inlet port 213 and the bowl fill outlet port 206 comprise various structures that couple together when the bowl fill valve 203 is connected to the bowl fill outlet port 206 as will be described. In particular, various embodiments of the coupling between the bowl fill valve inlet port 213 and the bowl fill outlet port 206 are described herein.

[0031] The bowl fill valve 203 also includes a handle that may be adjusted by hand to adjust a flow of water through the bowl fill valve 203 during a flush operation of a toilet in which the toilet fill valve 200 is installed. Typically, the handle 219 is initially adjusted to a desired position when the toilet fill valve 200 is installed and generally remains in such position for the continued operation of the toilet fill valve 200. During the life cycle of the bowl fill valve 203, it may be possible that the bowl fill valve 203 is adjusted to take into account various changes in the operation of the toilet fill valve 200 such as, for example, changes in pressure or other operational changes.

[0032] The bowl fill valve 203 also includes a nipple 223. The nipple 223 is adapted to mate with a tube that extends from the bowl fill valve outlet port 216 to the overfill tube 149 (FIG. 3) in a manner similar to that as shown in FIG. 3 with respect to the tube 146 (FIG. 3) that extends from the nipple 116 (FIG. 3) to the overflow tube

149 (FIG. 3). The bowl fill valve 203 extends beyond the bowl fill outlet port 206 in a radial direction with respect to the portion of the body 209 of the toilet fill valve 200.

[0033] In some embodiments, the bowl fill outlet port 206 may comprise a female receptacle and, correspondingly, the bowl fill valve inlet port 213 may comprise a male end compatible with the female receptacle. Alternatively, the bowl fill valve inlet port 213 may comprise a female receptacle and the bowl fill outlet port 206 may comprise a male end compatible with such female receptacle.

[0034] The toilet fill valve 200 further includes an actuating arm (not shown) that extends in a radial direction that is orthogonal relative to a longitudinal axis of the toilet fill valve 200 in a manner similar as that described with reference to the toilet fill valve 100 (FIG. 1). The longitudinal axis is defined as an axis that runs from the water inlet 103 through the body 209 of the toilet fill valve 200 and out the top of the toilet fill valve 200. In one embodiment, the bowl fill valve 203 extends radially in an orthogonal direction relative to such longitudinal axis of the toilet fill valve 200. Also, in one embodiment, the actuating arm is angularly offset relative to the bowl fill valve 203 to prevent interference between the bowl fill valve 203 and the translational stem 126 that extends from the float 123 to a free end of the actuating arm. This allows the float 123 to move up and down and to engage the actuating arm during the normal operation of the toilet fill valve 200 during various flush cycles.

[0035] In addition, the bowl fill valve 203 may be constructed with a number of biased positions that help prevent the bowl fill valve 203 from moving out of adjustment over time when the force of pressure develops therein. Also, the biased

positions aid a user in actual adjustment of the bowl fill valve 203 as can be appreciated.

[0036] The toilet fill valve 200 provides an advantage in that the body 209 of the toilet fill valve 200 may be constructed with the bowl fill outlet port 206 using a molding process that is much less complex than attempting to mold the entire bowl fill valve 203 within the structure of the body 209 as a single molded construction as was described with reference to one embodiment of the toilet fill valve 100. In this regard, the bowl fill valve 203 may be constructed as a separate component to the body 209 of the toilet fill valve 200 and assembled for distribution to end users.

[0037] Due to the fact that the bowl fill valve 203 is affixed to the toilet fill valve 200 through the coupling of the bowl fill outlet port 206 with the bowl fill valve inlet port 213, then a pressure head that develops within the bowl fill valve 203 due to the adjustment of the handle 219 during operation of the toilet fill valve 200 will not cause the bowl fill valve 203 to fall off of the toilet fill valve 200. Thus, when the toilet fill valve 200 is installed in a toilet tank 143, a user may adjust the opening of the bowl fill valve 203 by adjusting the handle 219 until a desired flow of water flows out of the bowl fill valve outlet port 216 into a tube and into the overflow tube 149 of a toilet. This flow of water is typically established to refill a toilet bowl of a toilet. In this regard, the flow of the water into the overflow tube 149 that refills the toilet bowl during a toilet flush operation may be regulated or adjusted so as to minimize or eliminate the amount of water that is lost down the drain of a toilet due to over filling of the toilet bowl during a flush cycle of a toilet. In one embodiment, the bowl fill valve 203 is

adjusted until the filling of the toilet bowl of the toilet coincides with the end of the flush cycle, thereby resulting in little or no loss of water.

[0038] Referring next to FIG. 5A, shown is a coupling 233 between one embodiment of the bowl fill outlet port 206, denoted herein as bowl fill outlet port 206a, and an embodiment of the bowl fill valve inlet port 213, denote herein as bowl fill valve inlet port 213a. The bowl fill valve inlet port 213a includes a slot 236 in a side wall 239. The bowl fill outlet port 206a comprises a rib (not shown) that extends from a side wall 243 that is inserted into the slot 236 when the bowl fill inlet port 213a is inserted into the bowl fill outlet port 206a. The mating of the slot 236 with the rib prevents the rotation of the bowl fill valve 213a with respect to the bowl fill outlet port 206a when the bowl fill valve inlet port 213a is inserted into the bowl fill outlet port 206a. Alternatively, there may be a number of slots 236 in the side wall 239 of the bowl fill valve inlet port 213a and a corresponding number of ribs extending from the side wall 243 of the bowl fill outlet port 206a.

[0039] The bowl fill valve inlet port 213a also includes an annular protrusion 246 that extends from the side wall 239 of the bowl fill valve inlet port 213a. Correspondingly, an annular groove (not shown) in the side wall 243 of the bowl fill valve outlet port 206a is provided that mates up with the annular protrusion 246 when the bowl fill valve inlet port 213 is inserted into the bowl fill outlet port 206a. In this respect, the annular protrusion 246 is snap fit into the annular groove (not shown), thereby affixing the bowl fill valve 203a to the bowl fill valve outlet port 206a.

[0040] Turning then to FIG. 5B, shown is a cutaway view of the coupling 233 between the bowl fill outlet port 206a and the bowl fill valve inlet port 213a according to

an embodiment of the present invention. In this respect, the bowl fill outlet port 206a is depicted with two ribs 249 extending from the side wall 243 within the bowl fill outlet port 206a. Also, the bowl fill outlet port 206a includes the annular groove 253 into which the annular protrusion 246 snaps when the bowl fill valve inlet port 213a is inserted into the bowl fill outlet port 206a. In this respect, the mating of the annular protrusion 246 with the annular groove 253 fixes the bowl fill valve 203 to the bowl fill outlet port 206a. In this respect, the bowl fill valve 203 becomes an integral portion of the toilet fill valve 200.

[0041] Also, the fit between the annular protrusion 246 is a snug fit that forms a seal between the bowl fill outlet port 206a and the bowl fill valve inlet port 213a that prevents the leakage of water from the coupling 233 during a flush cycle. Alternatively, a snug fit may occur between other mating surfaces of the bowl fill outlet port 206a and the bowl fill valve inlet port 213a that prevents leakage of water from the coupling 233.

[0042] With reference to FIGS. 5A and 5B, even though the slots 236 are depicted as being formed within the side wall 239 of the bowl fill valve inlet port 213 and the ribs 249 extend from the side wall 243 within the bowl fill outlet port 206, it is possible that this arrangement may be reversed where the slots 236 are formed in the side wall 243 of the bowl fill outlet port 206a and the ribs 249 extend from the side wall 239 of the bowl fill valve inlet port 213a. In addition, the annular groove 253 may be created in the side wall 239 of the bowl fill valve inlet port 213 and the annular projection 246 may extend inward from the side wall 243 within the bowl fill outlet port 206 in a reverse arrangement than that shown with reference to FIG. 5B.

[0043] Referring next to FIG. 6A, 6B, and 6C, shown is a coupling 263 between another embodiment of the bowl fill outlet port 206, denoted herein as bowl fill outlet port 206b, and another embodiment of the bowl fill valve inlet port 213, denoted herein as bowl fill valve inlet port 213b. The bowl fill valve inlet port 213b includes at least two locking ears 266 that mate with corresponding locking grooves 269 in the bowl fill outlet port 206b. In particular, the locking ears 266 extend from a side wall 271 of the bowl fill valve inlet port 213b. The locking grooves 269 are disposed in the side wall 273 of the bowl fill outlet port 206b. When the bowl fill valve 203 is inserted and twisted into the bowl fill outlet port 206b, each of the locking ears 266 is situated in a locking position of one of the locking grooves 269 as will be described. The coupling 263 further comprises a sealing ring 276 that may be, for example, a rubber O-ring or other type of sealing ring. The sealing ring 276 is compressed between an end of the bowl fill valve inlet port 213b and a seat within the bowl fill outlet port 206b as we described. While at least two locking ears 266 and corresponding locking grooves 269 are shown, it is possible that a design may be employed that comprises a single locking ear 266 and a single corresponding locking groove 269.

[0044] With reference to FIG. 6B, shown is a portion of the bowl fill valve inlet port 213b and the bowl fill outlet port 206b as the bowl fill valve inlet port 213b is inserted into the bowl fill outlet port 206b and is partially rotated such that the locking ears 266 are almost located in the locking positions 279. In this respect, each of the locking grooves 269 is a “J” formation. The J formation of the locking grooves 269 allows the locking ears 266 to slide down and around the partial loop of the J and seat in the locking position 279 such that the sealing ring 276 exerts a force against the end

of the bowl fill valve inlet port 213b, thereby pushing the locking ears 266 into the locking positions 279 of the locking grooves 269 and holding the locking ears 266 in place. This ensures that the bowl fill valve 203 remains coupled to the bowl fill outlet port 206b.

[0045] With reference to FIG. 6C, shown is a cutaway view of the coupling 263 between the bowl fill outlet port 206b and the bowl fill valve inlet port 213b. In this respect, the bowl fill valve inlet port 213b is inserted into the bowl fill outlet port 206b in a manner such that the locking ears 266 mate with the locking grooves 269. When the locking ears 266 reach the bottom of the "J" of the locking grooves 269, then the bowl fill valve 203 is rotated so that the locking ears 266 may be seated in the locking positions 279.

[0046] The sealing ring 276 is seated against a portion of the bowl fill outlet port 206b. In one embodiment, this portion is a seating face 283 of the bowl fill outlet port 206b. Also, a portion of the bowl fill valve inlet port 213b is mated against the sealing ring 276. In one embodiment, this portion of the bowl fill valve inlet port 213b is an end face 286 such that the sealing ring is clamped between the seating face 283 and the end face 286 when the bowl fill valve inlet port 213b is inserted fully into the bowl fill outlet port 206b. The clamping or compression of the sealing ring 276 pushes the locking ears 266 into the locking position 279 of the locking grooves 269 once the bowl fill valve 203 is rotated accordingly. In this respect, the compressive force of the sealing ring 276 helps keep the bowl fill valve inlet port 213b of the bowl fill valve 203 mated with the bowl fill outlet port 206b. Also, the sealing ring 276 forms a seal between the bowl fill outlet port 206b and the bowl fill valve inlet port 213b that

prevents leakage of water from the coupling 263 between the bowl fill outlet port 206b and the bowl fill valve inlet port 213b.

[0047] The locking positions 279 of the locking grooves and the locking ears 266 are located such that when the bowl fill valve 203 is rotated thereby positioning the locking ears 266 in the locking positions 279, the bowl fill valve 203 is substantially upright. In addition, the bowl fill outlet port 206b includes structural ribs 289 that provide greater structural stability for the bowl fill outlet port 206b and its attachment to the portion of the body 209 of the toilet fill valve 200 (FIG. 4). Alternatively, the bowl fill outlet port 206b may be attached without the structural ribs 289. In addition, it may be the case that the locking ears 266 extend inward from the side wall 273 of the bowl fill outlet port 206b and that the locking grooves 269 be situated within the side wall 271 of the bowl fill valve inlet port 213b.

[0048] Referring next to FIG. 7, shown is a cutaway view of a coupling 303 between a third embodiment of the bowl fill outlet port 206, denoted herein as bowl fill outlet port 206c and the bowl fill valve inlet port 213 denoted herein as bowl fill valve inlet port 213c. In this respect, the bowl fill outlet port 206c includes a first thread 306 disposed on a side wall 309 of the bowl fill outlet port 206c. A second thread 313 is disposed on a side wall of the bowl fill valve inlet port 213c that engages the first thread 306 disposed in the side wall of the bowl fill outlet port 206c. The bowl fill valve inlet port 213c is coupled to the bowl fill outlet port 206c by way of the first and second threads 306 and 313. Specifically, the bowl fill valve 203 may be screwed onto the bowl fill outlet port 206c by virtue of the threads 306 and 313. When the bowl fill valve inlet port 213c is screwed into the bowl fill valve outlet port 206c, a sealing ring 316 is

clamped between portions of the bowl fill valve inlet port 213c and the bowl fill outlet port 206c such as a seating face 319 of the bowl fill outlet port 206c and an end face 323 of the bowl fill valve inlet port 213c. In this respect, a seal is formed between the bowl fill outlet port 206c and the bowl fill valve inlet port 213c. Alternatively, the threads 306 and 313 may be specified so as to form an adequate seal between the bowl fill valve outlet port 206c and the bowl fill valve inlet port 213c for purposes of preventing leakage. As an additional alternative, the seating face 319 and the end face 323 or other portions of the bowl fill valve inlet port 213c and the bowl fill outlet port 206c may be compressed together to form a seal to prevent leakage. Alternatively, the bowl fill outlet port 206c and the bowl fill valve inlet port 213c may be designed to include mating surfaces that perform a friction seal as can be appreciated.

[0049] Referring next to FIG. 8a, shown is one embodiment of the bowl fill valve 203, denoted herein as bowl fill valve 203a according to an embodiment of the present invention. The bowl fill valve 203a includes a handle 219a and a valve body 333. The bowl fill valve 203a includes the bowl fill valve outlet port 216a and the bowl fill valve inlet port (not shown) the bowl fill outlet port 216a includes a nipple 223a.

[0050] Referring then to FIG. 8b, shown is a cutaway view of the bowl fill valve 203a according to an embodiment of the present invention. In this respect, the valve body 333 forms a cavity within which a valve 336 is inserted as shown. A line contact 339 is formed between surfaces of the valve body 333 and the valve 336 so as to both hold the valve 336 within the cavity that is formed by the valve body 333 and to form a seal between the valve body 333 and the valve 336 to prevent water leakage. As

seen, the valve 336 is integrated with the handle 219a in a single piece construction, although multiple piece construction may be employed.

[0051] With reference to FIGS. 9a and 9b, shown is a second embodiment of the bowl fill valve 203, denoted herein as bowl fill valve 203b according to an embodiment of the present invention. The bowl fill valve 203b includes a valve body 343 within which is inserted a valve 346. The bowl fill valve 203b further comprises the bowl fill valve outlet port 216b and a bowl fill valve inlet port (not shown). The bowl fill valve outlet port 216b includes a nipple 223b. The bowl fill valve 203b further includes a handle 209b for manual adjustment of the bowl fill valve 203b.

[0052] Referring next to FIG. 9b, shown is a cutaway view of the bowl fill valve 203b according to an embodiment of the present invention. As shown, the valve 346 is inserted into the valve body 343. A snap fit 349 affixes the valve 346 within the valve body 343. A seal is formed by virtue of an interference fit 353 between a surface of the valve 346 and an inner surface of the valve body 343. The bottom of the cavity within the valve 346 is closed by a cap 356 that may be spin welded onto the valve 346 after the valve is inserted into the valve body 343.

[0053] In addition, referring back to FIG. 4, other types of couplings may be employed between the bowl fill outlet port 206 the bowl fill valve inlet port 213. For example, the bowl fill outlet port 206 the bowl fill valve inlet port 213 may be configured to facilitate a compression fitting there between. Also, other snap fit and sealing configurations may be employed beyond those specifically described herein.

[0054] Although the invention is shown and described with respect to certain embodiments, it is obvious that equivalents and modifications will occur to others

skilled in the art upon the reading and understanding of the specification. The present invention includes all such equivalents and modifications, and is limited only by the scope of the claims.

CLAIMS

What is claimed is:

1. A system, comprising:

a toilet fill valve that comprises:

a body comprising an extended portion, wherein the extended portion is integrally molded with the body, wherein the extended portion forms a bowl fill outlet port;

a water inlet configured to receive water from a water source;

a tank water outlet configured to provide a first portion of the water to a toilet tank during at least a portion of a flush cycle;

a bowl fill restriction configured to attach directly to the extended portion of the body, wherein the bowl fill restriction is configured to receive a second portion of the water from the bowl fill outlet port during at least a portion of the flush cycle, wherein the restriction is configured to constrict a flow rate of the second portion of the water that flows through the restriction; and

a tube that is configured to attach directly to the bowl fill restriction, wherein the tube is configured to direct the second portion of the water from the bowl fill restriction directly to a toilet tank overflow tube.

2. The system of claim 1, wherein the extended portion of the body extends radially from a longitudinal axis of the toilet fill valve.

3. The system of claim 1, wherein a portion of the bowl fill restriction is configured to insert into the extended portion of the body.

4. The system of claim 1, wherein the bowl fill restriction is configured to be clamped to the extended portion of the body.

5. The system of claim 1, wherein the bowl fill restriction is configured to be snapped onto the extended portion of the body.

6. The system of claim 1, wherein the toilet fill valve further comprises:

a float; and

an actuating arm coupled to the float, wherein the actuating arm extends in an orthogonal direction relative to a longitudinal axis of the toilet fill valve, wherein the actuating arm is angularly offset relative to the bowl fill valve, thereby preventing an interference with the bowl fill restriction and a translational stem that extends from the float to a free end of the actuating arm.

7. The system of claim 1, wherein the bowl fill restriction further comprises a nipple that is configured to insert into the tube.

8. The system of claim 1, wherein the bowl fill restriction prevents a pressure head from being formed in the tube.

9. A method, comprising:

receiving, via a water inlet of a toilet fill valve, water from a water supply;

providing, via a tank water outlet of the toilet fill valve, a first portion of the water to a toilet tank;

providing, via a bowl fill outlet port of the toilet fill valve, a second portion of the water to a bowl fill restriction, wherein an extended portion of the toilet fill valve forms the bowl fill outlet port, wherein the extended portion is integrally molded with the toilet fill valve, wherein the bowl fill restriction is in direct contact with the extended portion of the toilet fill valve;

restricting, using the bowl fill restriction, a flow of the second portion of the water;

providing, via the bowl fill restriction, the second portion of the water to a tube that is in direct contact with the bowl fill restriction; and

providing, via the tube, the second portion of the water to a toilet tank overfill tube.

10. The method of claim 9, wherein the bowl fill restriction prevents a pressure head from being formed in the tube.

11. The method of claim 9, further comprising terminating, using the toilet fill valve, the flow of the second portion of the water so that a water level in a toilet bowl is at a predefined level.

12. The method of claim 11, wherein the water level is determined at least in part by the bowl fill restriction.

13. The method of claim 9, wherein the extended portion of the toilet fill valve is a portion of a body of the toilet fill valve.

14. The method of claim 9, wherein the extended portion of the toilet fill valve extends radially from a longitudinal axis of the toilet fill valve.

15. A method, comprising:

attaching a bowl fill restriction directly to an extended portion of a body of a toilet fill valve, wherein the extended portion is integrally molded with the body, wherein the extended portion forms a bowl fill outlet port, wherein the bowl fill restriction is configured to constrict a flow rate of water that flows out of the bowl fill outlet port; and

attaching a tube directly to the bowl fill restriction, wherein the tube is configured to direct the water from the restriction directly to a toilet tank overflow tube.

16. The method of claim 15, further comprising preventing the bowl fill restriction from detaching from the extended portion of the body.

17. The method of claim 16, wherein preventing the bowl fill restriction from detaching from the extended portion further comprises clamping the bowl fill restriction to the extended portion.

18. The method of claim 16, wherein preventing the bowl fill restriction from detaching from the extended portion further comprises snapping the bowl fill restriction to the extended portion.

19. The method of claim 16, wherein preventing the bowl fill restriction from detaching from the extended portion further comprises rotating the bowl fill restriction with respect to the extended portion.

20. The method of claim 15, wherein attaching a bowl fill restriction directly to the extended portion of the body of the toilet fill valve further comprises inserting a portion of the bowl fill restriction into the extended portion of the body.

ABSTRACT OF THE DISCLOSURE

In various embodiments, a water inlet of a toilet fill valve receives water from a water supply. A tank water outlet of the toilet fill valve provides a first portion of the water to a toilet tank. A bowl fill outlet port of the toilet fill valve provides a second portion of the water to a bowl fill restriction that is in direct contact with an extended portion of the toilet fill valve. The bowl fill restriction restricts the flow of the second portion of the water. The bowl fill restriction provides the second portion of the water to a tube that is in direct contact with the bowl fill restriction. The tube provides the second portion of the water to a toilet tank overfill tube.

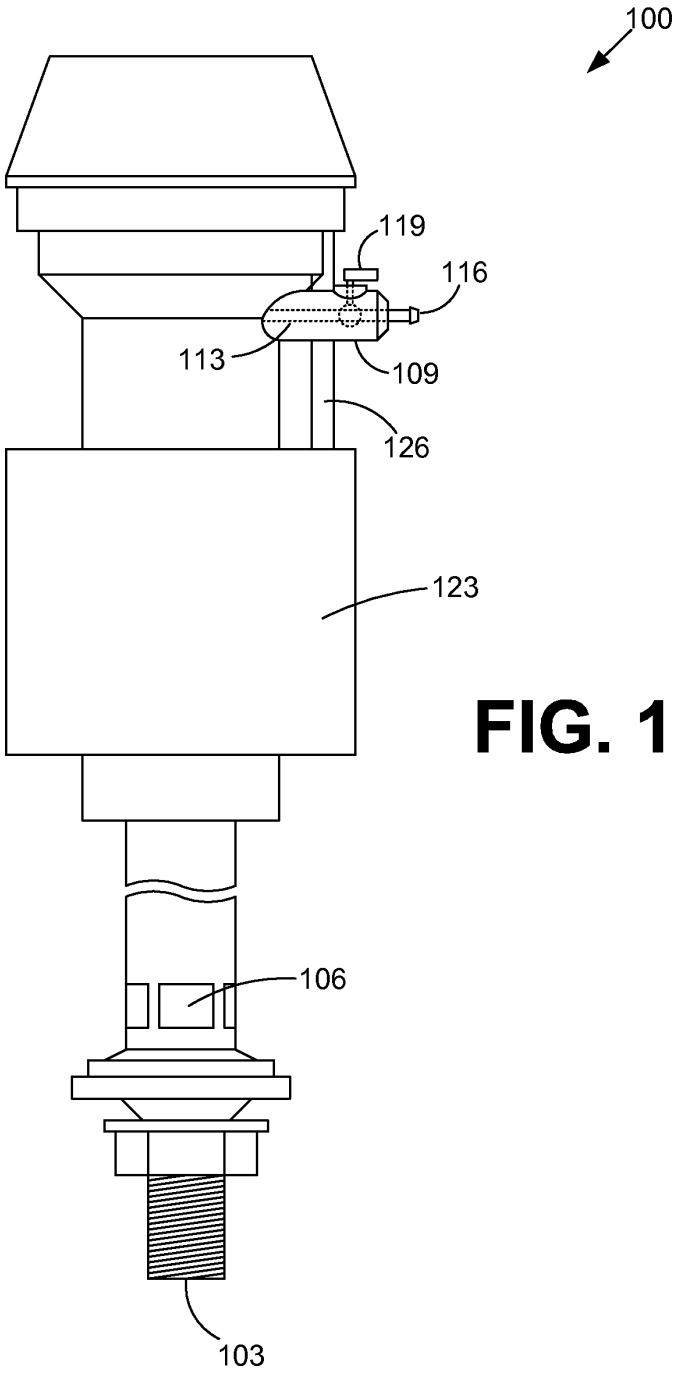

FIG. 1

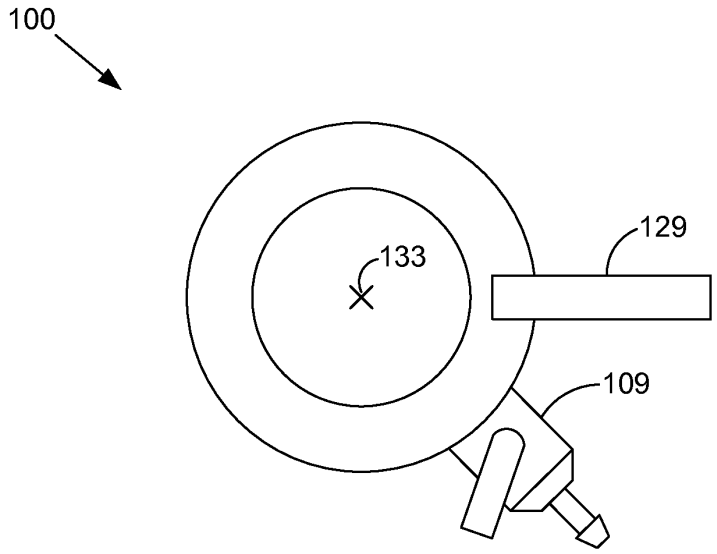

FIG. 2

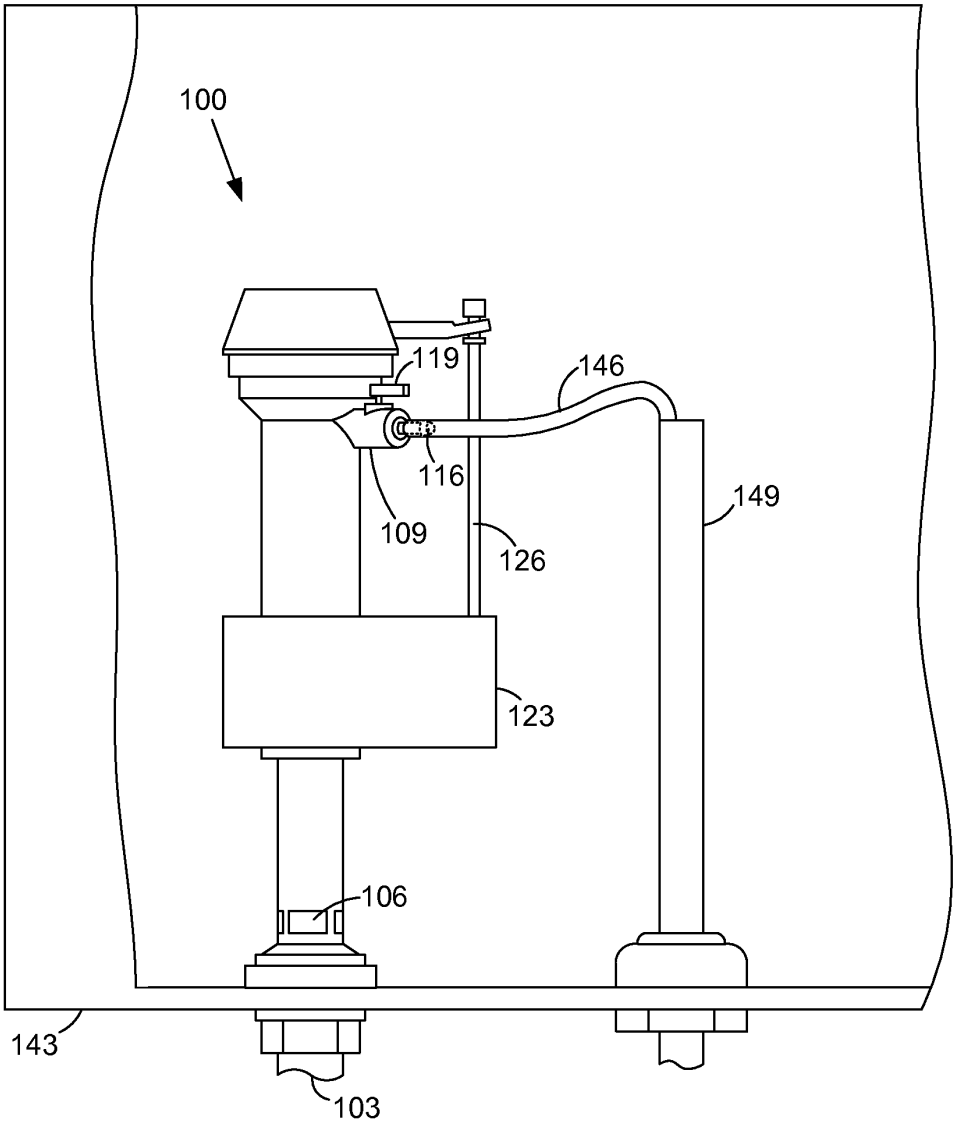

FIG. 3

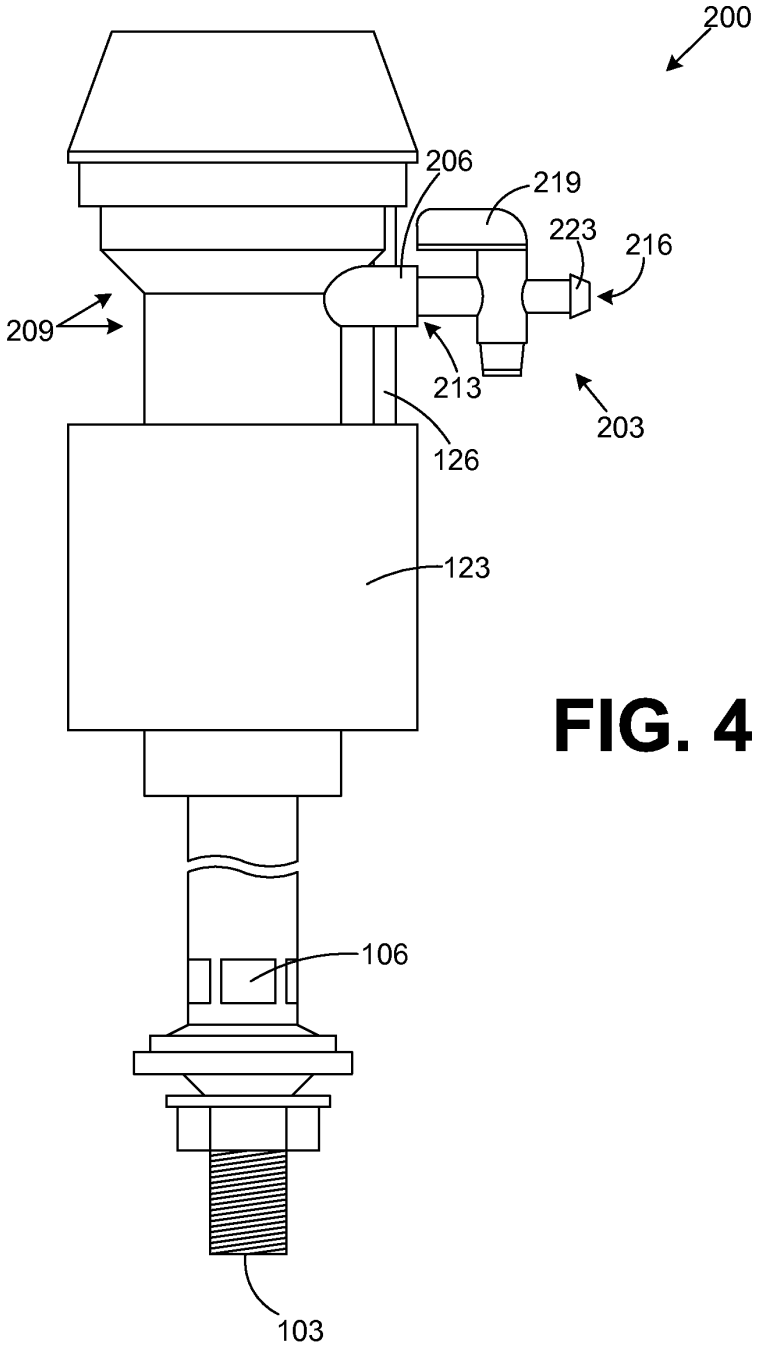

FIG. 4

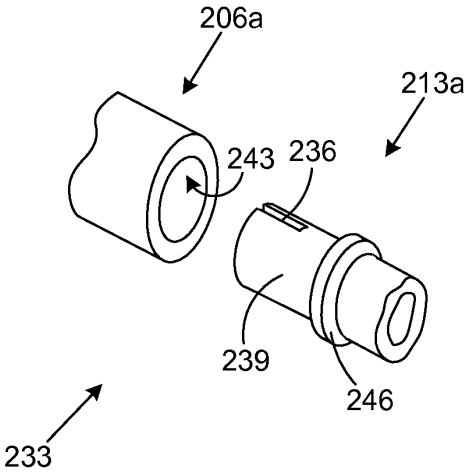
206a
213a
243
236
239
246
233

FIG. 5A

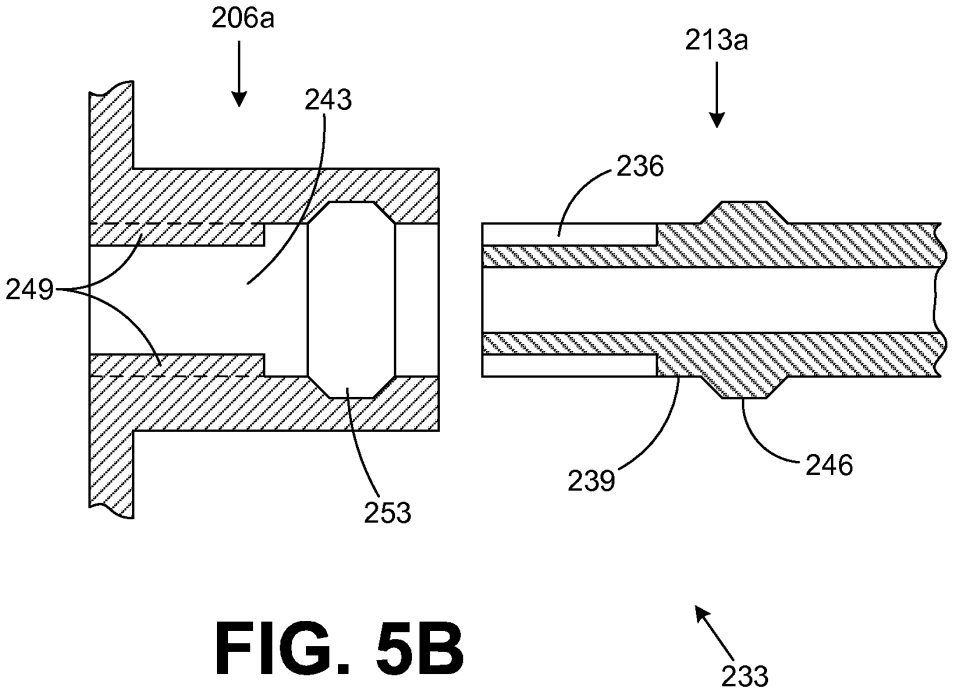
206a
243
213a
236
249
239
246
253
233

FIG. 5B

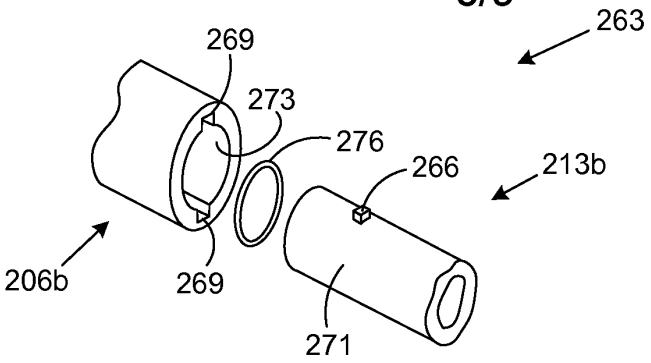

FIG. 6A

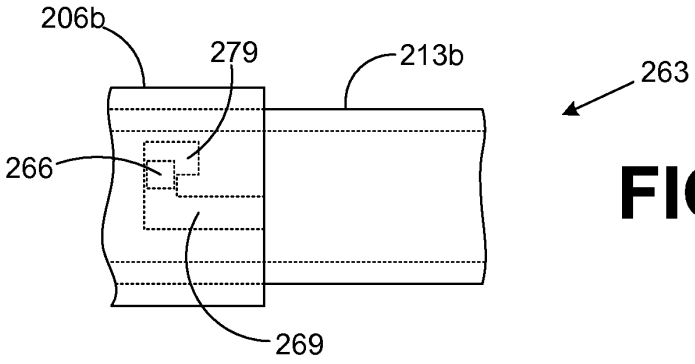

FIG. 6B

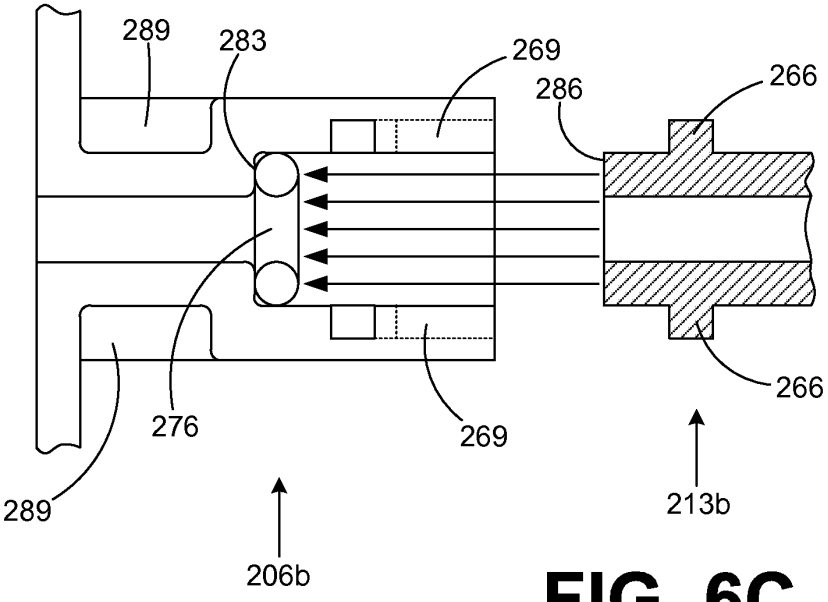

FIG. 6C

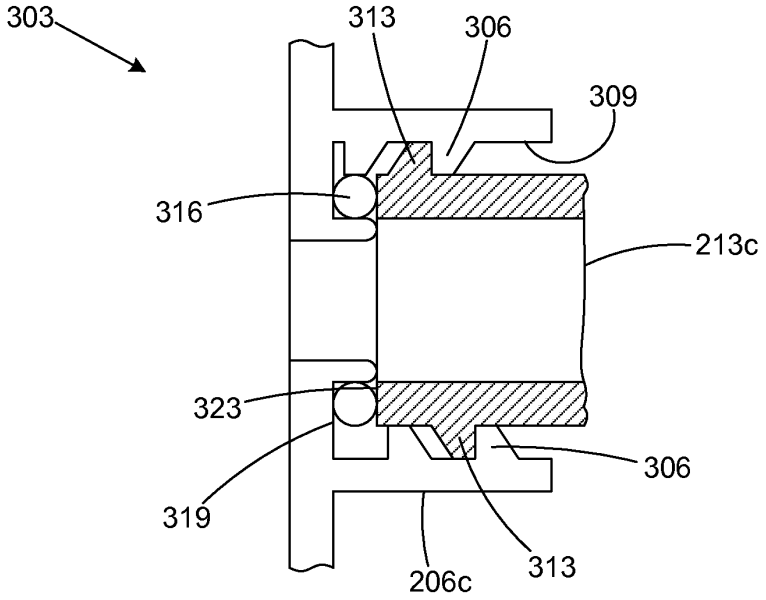

FIG. 7

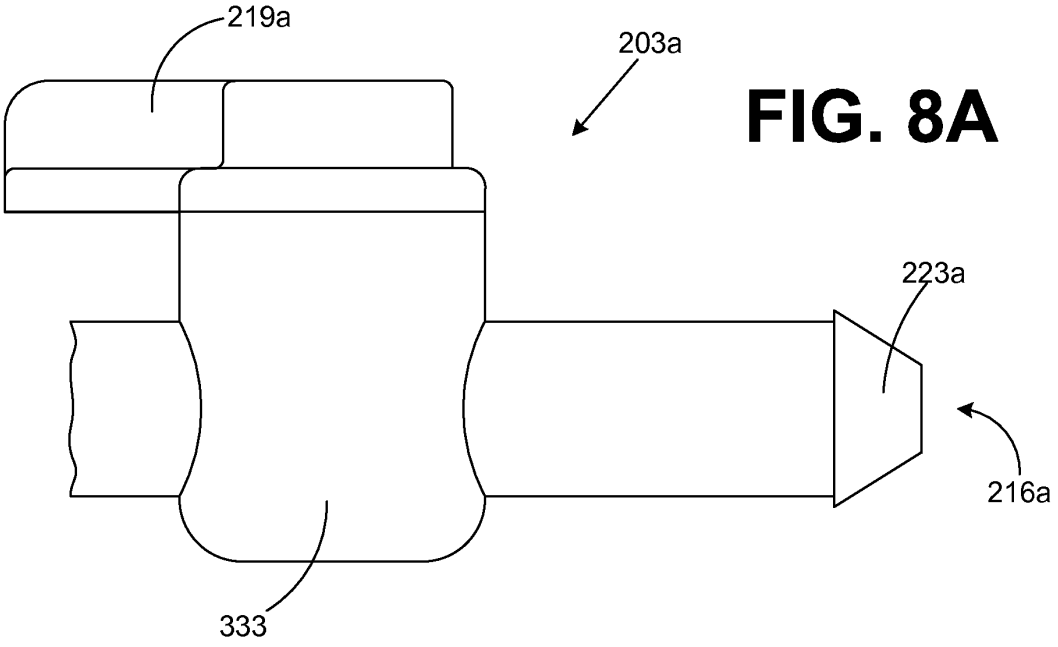

FIG. 8A

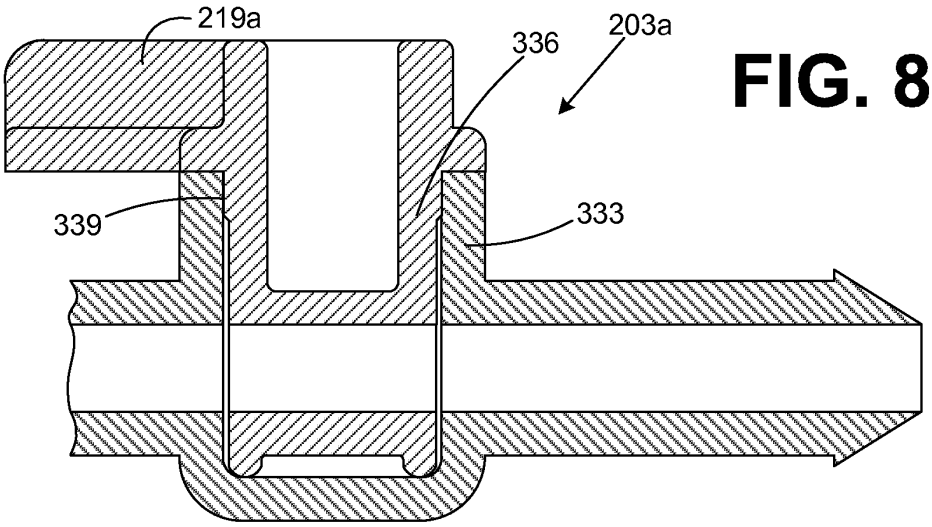

FIG. 8B

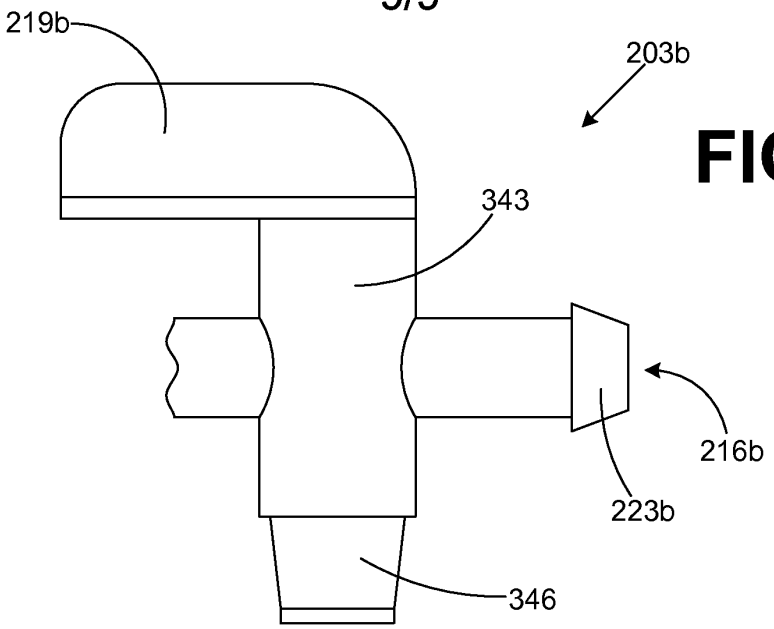

FIG. 9A

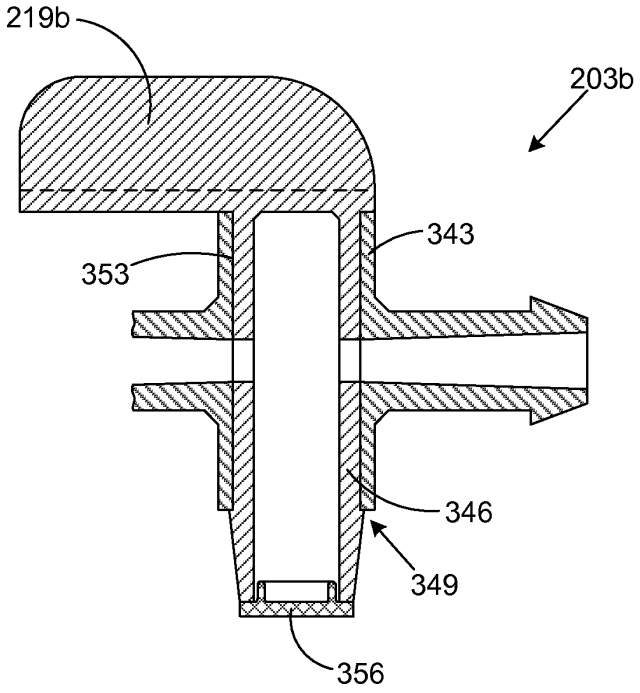

FIG. 9B