US006219856B1

(12) **United States Patent**
Alles

(10) **Patent No.: US 6,219,856 B1**
(45) **Date of Patent: Apr. 24, 2001**

(54) **FLOW RESTRICTOR FOR WATER CLOSET REFILL TUBE**

(76) Inventor: **Wilmer F. Alles**, 173 E. Belmar Ave., Absecon, NJ (US) 08201-9758

(*) Notice: Subject to any disclaimer, the term of this patent is extended or adjusted under 35 U.S.C. 154(b) by 0 days.

(21) Appl. No.: **08/230,075**

(22) Filed: **Apr. 20, 1994**

(51) **Int. Cl.**[7] **E03D 1/00**
(52) **U.S. Cl.** **4/415**; 137/441
(58) **Field of Search** 4/415, 222, 225.1, 4/226.1; 138/44, 40; 137/441; 285/239

(56) **References Cited**

U.S. PATENT DOCUMENTS

216,736	*	6/1879	Hall, II	285/239
585,014	*	6/1897	Wenzel et al.	285/239
928,237	*	7/1909	Baird	285/239
1,078,584	*	11/1913	Jones	138/46
1,137,382	*	4/1915	Calvert	285/239
1,671,361	*	5/1928	Frankenberger	137/441
1,901,633	*	3/1933	Clemmons	137/436
1,939,509	*	12/1933	McClelland	138/44
2,401,665	*	6/1946	Schick	138/44
2,722,944	*	11/1955	Langdou et al.	137/441
2,804,928	*	9/1957	Farrar	138/40
3,086,546	*	4/1963	Brown	137/441
3,311,131	*	3/1967	Zahuranec	138/44
3,656,783	*	4/1972	Reeder	285/239
3,744,064	*	7/1973	Preston	4/325
4,105,721	*	8/1978	Schliebe	138/44
4,145,775		3/1979	Butler	4/415
4,538,307		9/1985	Barnum	4/427
4,764,996		8/1988	Pino	4/415
4,915,135	*	4/1990	Kellenbarger et al.	138/44
4,980,932		1/1991	Stemples	4/415
5,004,462		4/1991	Mahler	4/325
5,058,216		10/1991	Trayer et al.	4/251
5,134,729		8/1992	Shaw	4/415
5,259,074		11/1993	Battle	4/325

* cited by examiner

Primary Examiner—Charles R. Eloshway

(57) **ABSTRACT**

An externally threaded thermoplastic flow restriction member is threaded into the internal bore of a toilet bowl thermoplastic refill tube in interference fit with the tube bore. The restriction member has a bore which is sized to restrict the flow of toilet bowl refill water during tank refill so the bowl is filled in about the same period of time as the tank. A slot can be formed in one end of the restriction member to permit the restriction member to be inserted readily into the refill tube.

1 Claim, 1 Drawing Sheet

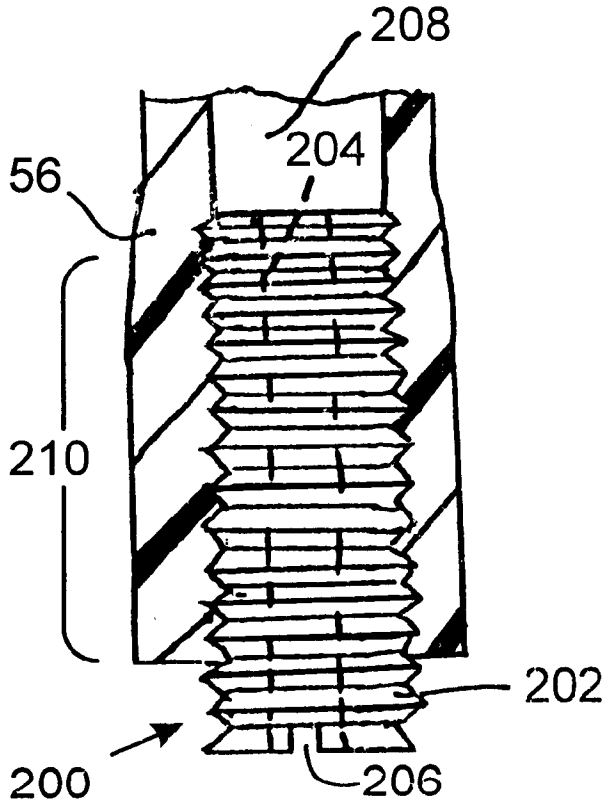

FIG. 1

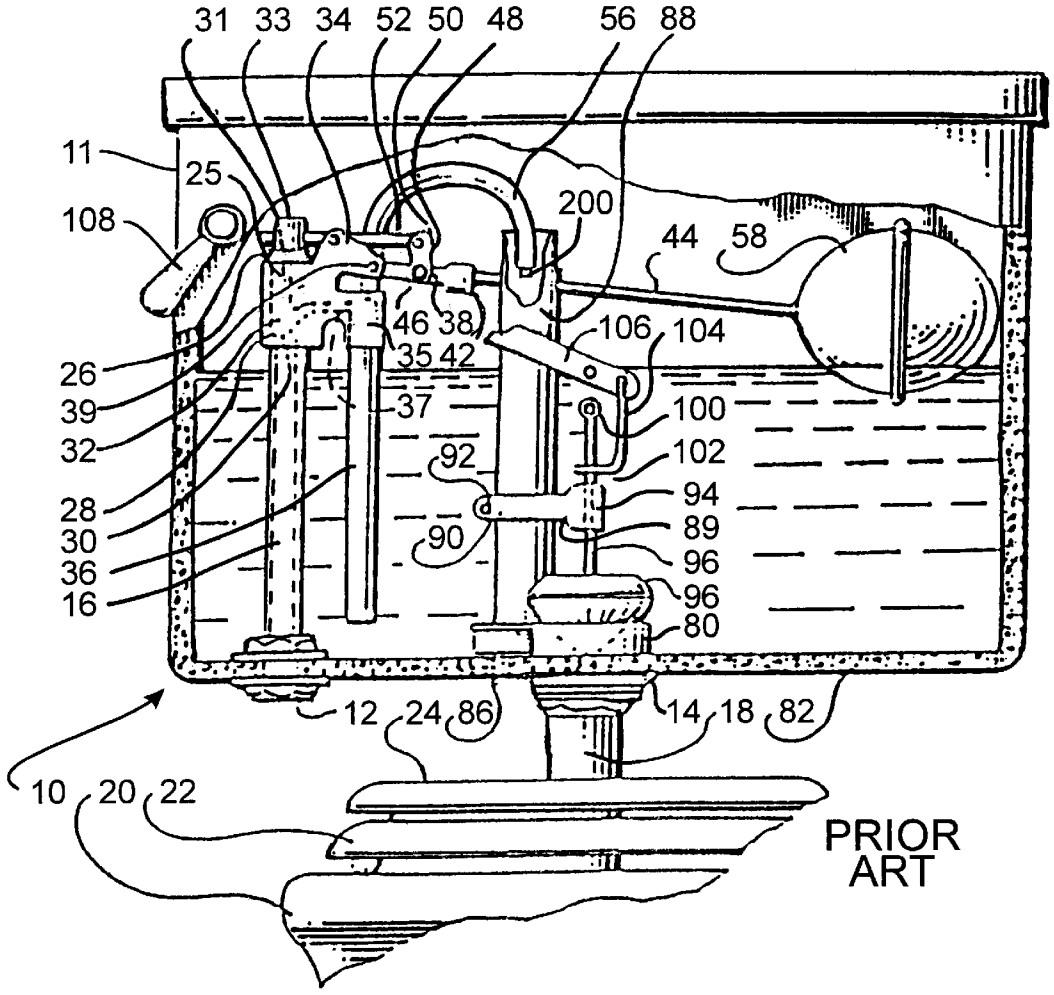

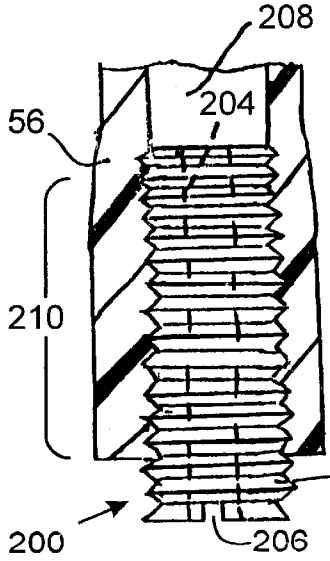

FIG. 4

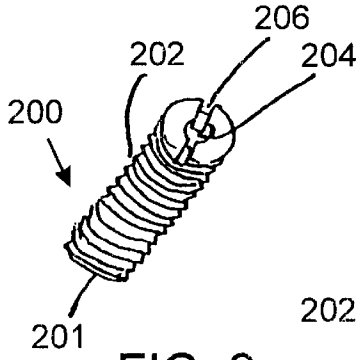

FIG. 2

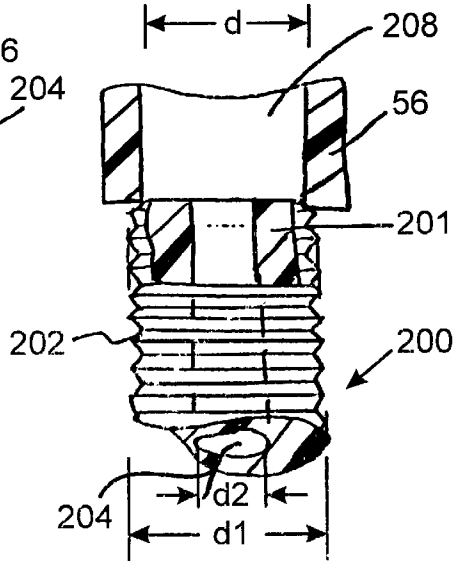

FIG. 3

FLOW RESTRICTOR FOR WATER CLOSET REFILL TUBE

This invention relates to water flow restrictors to reduce water wastage during bowl refill of water closets.

In conventional water closets comprising a bowl and a tank which receives flush water for selectively discharging to the bowl, the bowl is simultaneously refilled with water as the tank is refilled. Since the tank is much larger than the bowl and typically fills at a significantly slower rate, once the bowl fills, added refill water supplied thereto discharges into the water closet discharge plumbing, wasting the water thereafter supplied to the bowl as the tank continues to fill. Since in the United States, at least, the sole water supplies to a community is potable, treated, water, this waste of the excess water, while not considerable for each flush, when multiplied by millions of people, for up to 6–8 flushes per day, amounts to a considerable drain on increasingly precious potable water resources. Chemicals used to treat potable water supplies are discharged to the groundwater, further contaminating natural water supplies. This wastage of significant amounts of potable water thus is expensive both in terms of cost and of harm to the environment.

The prior art recognizes this problem, and several solutions have been offered heretofore. For example, U.S. Pat. No. 4,764,996 to Pino provides a pinch clamp for restricting flow through the bowl's flexible refill tube, and a threaded metal fitting is attached to the tube for securing an S-shaped wire to secure the refill tube end to the rim of an overflow pipe. However, pinch tubes may not accurately control the water flow rate.

U.S. Pat. No. 5,134,729 to Shaw uses a plurality of flow control inserts which are retained in the refill tube by frictional engagement in the refill tube. These may have the problem that water pressure in the tube may force the inserts out of the refill tube.

U.S. Pat. No. 5,058,216 to Trayer et al discloses a variable flow control restrictor, and U.S. Pat. No. 4,145,775 to Butler discloses a two piece hollow assembly whose pieces are rotatable relative to each other to vary the flow rate therethrough. Another adjustable valve device is disclosed in U.S. Pat. No. 4,980,932 to Stemples. However, adjustable devices are relatively costly and may be difficult for the average homeowner to install. Other water closets having adjustable water filling devices are illustrated in U.S. Pat. No. 5,259,074 to Battle, U.S. Pat. No. 4,538,307 to Barnum et al and U.S. Pat. No. 5,004,462 to Mahler.

There is still a need for a simple, low cost restrictor that can be readily installed by a layman and that reduces the amount of water wasted for each flush of a water closet.

SUMMARY OF THE INVENTION

A conventional water closet includes a toilet bowl, a toilet tank for supplying flush water to the bowl, water supply means for supplying water to fill the tank and bowl refill means including a thermoplastic, flexible tube having a first bore of a given internal diameter. The water supply means supplies fill water to the bowl simultaneously with fill water to the tank, but the bowl fills more rapidly than the tank, and overflows to a water closet discharge. The present improvement comprises, in accordance with one embodiment of the present invention, a restriction member having external threads along its outer periphery and having a second bore smaller than the first bore for insertion into the first bore, thereby restricting the bowl refill rate, and limiting the amount of excess water that overflows into the water closet discharge. The external threads have a tooth crest outer diameter greater than the first bore internal diameter, thereby providing threaded interference engagement between the restriction member having external threads and the refill tube first bore.

In accordance with a further embodiment of the present invention, tool receiving means are formed in the tubular restriction member at one end to permit attachment of the external threaded restriction member to the thermoplastic refill tube at a tube end. In a further embodiment, the tool receiving means is a slot for a screw driver tool.

BRIEF DESCRIPTION OF THE DRAWING

FIG. **1** is a fragmented side elevational view partially in section, of a water closet according to one embodiment of the present invention.

FIG. **2** is an isometric view of a refill tube flow restriction member having external threads used in the embodiment of FIG. **1**.

FIG. **3** is an elevational sectional fragmented view of the restriction member of FIG. **2** about to be inserted into the bowl refill tube, showing the relation of the various bore diameters.

FIG. **4** is a sectional partial elevational view of the e nd of the bowl refill tube with the restriction member of the present invention inserted therein.

DETAILED DESCRIPTION OF THE INVENTION

Referring now to FIG. **1**, a water closet **10** has a flush water receiving tank **11**, the closet being conventional and as described in the aforementioned U.S. Pat. No. 4,764,996 and 4,145,775, incorporated herein by reference. The tank **11** has a water inlet **12** and a water outlet **14**. A conduit **16** is connected to a source (not shown) of pressurized water at inlet **12**. A discharge pipe **18** is connected at its upper end to outlet **14** and at its bottom end to a conventional bowl **20** having a seat **22** and a cover **24**.

An intake valve **25** is mounted on the top of the intake conduit **16**, and includes a valve casing **26** with a vertical bore **28** and a valve seat **30** at the bore bottom. A valve stem **31** has a ball valve **32** connected thereto seated against the seat **30**. The stem **31** has an end opposite to the valve **30** connected to a sliding piston **33** in the bore **28**.

The valve casing **26** has an arm **34** extending into the tank **11** and has a downwardly extending opening water outlet **35** connected to the bore **28** by a bypass **37** and closet tank filling tube **36**. A lever **38** is pivoted to the pin **39**, the other end of the lever having a socket **42**. A float rod **44** end is secured to the socket **42**. A ball float **58** is connected to the rod **44** at its other end. A link **48** is pivoted at pivot **46** to the lever **38** at one link end, and at the other link end to a lever **52** at the pivot **50**. The lever **52** is pivoted midway between its ends to the arm **34** and at its other end to the piston **33** to open the intake valve **25** in one direction, and close it in the other direction. The piston **33** controls the flow of water through the intake valve **25**. A refill tube **56** is coupled to the top of the water outlet **35** at one end to an already installed fitting, and the other end of the refill tube **56** extends into the overflow pipe **88**. The refill tube **56**, already an existing part of the water closet mechanism, is made suitably of a thermoplastic which is pliable and flexible. The refill tube **56** has a threaded fitting at one end for attachment to the outlet **35**.

In the prior art, the discharge end of the refill tube **56** normally is suspended in the upper end of the overflow pipe **88** by an S-shaped hook. In such water closets requiring an S-shaped hook to retain the refill tube **56** in the overflow pipe **88**, it would still be required in the present invention, as further explained hereinbelow, so that the refill tube **56** is not displaced from the overflow pipe. When the S-shaped hook is suspended in the refill tube **56**, it is placed such that only a small portion of the refill tube extends into the

overflow pipe **88**. The refill tube **56** fills the bowl **20** simultaneously when the tank **11** is filled via fill pipe **36**. As the tank **11** fills, water flows through the refill tube **56** into the overflow pipe **88** into the bowl **20**, filling the bowl **20**. Unless otherwise provided for, the bowl **20** fills much quicker in most water closets than the tank **11**.

A water flow restriction member **200**, in accordance with the present invention, is inserted into the end of the refill tube **56** which extends inside the overflow pipe **88**. The restriction member **200** restricts the flow of water to the bowl **20** so that the bowl **20** fills more slowly in order to match the filling rate of the tank **11**. In FIG. **2**, the restriction member **200** has a circular cylindrical body **201** which is preferably made of a rigid thermoplastic, e.g., nylon, and has external threads **202**. The body **201** has an axially extending central circular cylindrical bore **204** in communication with both ends of the body **201**. A screw driver receiving slot **206** is formed in one end of the body **201**.

When an S-shaped hook is employed, referred to hereinabove, the restrictor **200** is screwed into the refill tube far enough, approximately ¾ of an inch, to permit the S-shaped hook to be inserted in the end of the refill tube **56**.

In water closets having a retaining device already installed in the top of the overflow pipe **88**, the restrictor **200** is screwed into the end of the refill tube **56**, when the refill tube **56** is reinserted into the installed retainer.

In FIG. **3**, the refill tube **56** has a bore **208**. This bore **208** has a diameter d. The external threads **202** of the restriction member **200** have a thread crest outer diameter d**1**. The diameter d**1** is greater than diameter d. This results in an interference fit of the threads **202** in the bore **208** of the refill tube **56** wherein the threads bite into the yielding soft plastic material of the refill tube **56** as the restriction member **200** is inserted, as by a twisting motion. The bore **204** has a diameter d**2** sized such that water flowing through the bore **204** will just fill the bowl **20** when the tank **11** is also just filled during the refill cycle.

To insert the restriction member **200** into the refill tube **56**, a tool, such as a screw driver (not shown) may be utilized to drive the restriction member **200** into the bore **208** of the refill tube **56**. Because of the interference fit, the refill tube **56** outer diameter may bulge somewhat at region **210**, see FIG. **4**. This interference fit provides a relatively high engagement friction load between the restriction member **200** and the refill tube **56**. The plastic of the refill tube **56**, being relatively soft, deforms so that its material conforms somewhat to the shape of the threads **202**, as shown in FIG. **4**. The plastic material of the refill tube **56** inner wall need not identically conform to the exact shape of the threads **202**, as long as the restriction member **200** is forcibly retained within the refill tube **56** bore **208**. Also, water pressure in the refill tube **56** can not disengage restriction member **200** because of the threaded engagement and because of the frictional forces as well.

The screw driver slot **206** is not critical, as other means may be employed to insert the restriction member **200** into the refill tube **56**. Such means can include a temporary nut attached to the restriction member **200**. This nut can later be removed from the restriction member **200** if desired. However, the screw driver slot **206** is preferred because of the simplicity of insertion of the restriction member **200** into the bore **208**, and the ease of removal of the restriction member **200** from the refill tube **56** if required. Also, high turning insertion forces can be provided to the restriction member **200** by using a tool such as a screw driver. The insertion forces can be set by setting the desired thread diameter of the restriction member **200** by using different diameter threads **202**. The amount of interference plainly will set the insertion load. This interference load also depends upon the type of plastic material used for the refill tube **56**, which is supplied with the water closet **10**.

Preferably, the bore **204** of restrictive member **200** has a diameter such that the bowl can fill without excessive overflow, and can vary somewhat, suitably in the range of about 1/16 to about 5/32 inch for most water closets. This range may differ in accordance with a particular water closet tank fill rate and water pressure. For conventional water closets, the restriction member **200** internal bore diameter may be at least 5/64 inch, and preferably is about 3/32 inch, to maintain a proper flush for the bowl **20**. Newer water closets of reduced capacity, e.g., 1.6 gallon of water capacity, will require a restriction member **200** diameter of about 9/64 inch.

The restriction member **200** preferably is formed from conventional threaded nylon screw stock of ¼ 20 threads and has an axial length of about ½ inch. Because refill tubes **56** of newer 1.6 gallon water closets are smaller than older models, the restriction member **200** may be formed of 12/24 screw stock. These examples are illustrative only, and the outer diameter of the restriction member **200** is not critical, except that it must be larger than the bore **208** of the refill tube **56**.

While a screw driver is described as suitable for driving the restriction member **200** into the bore **208** of the refill tube **56**, other embodiments may be used, e.g., the restriction member **200** may be formed with flattened sides to receive a wrench for insertion of the restriction member **200** into the refill tube **56**. The restriction member **200** is preferably made of thermoplastic, but may also be made of metal if desired. However, thermoplastic is less expensive and is not subject to corrosion, and thus is preferred.

The remaining structure of the water closet **10** of FIG. **1** is conventional. As a result of the present invention, a simple, low cost, reliable water flow restriction member is provided which is simple to install and that is adaptable to different size bowl refill tubes **56**.

Various modifications may be made to the above-described embodiments of the restriction member, as will be known to one skilled in the art. The embodiments shown and described hereinabove are illustrative only and are not meant to limit the scope of the invention, which is meant to be limited only by the appended claims.

I claim:

1. In a water closet including a toilet bowl, a toilet tank for supplying flush water to the bowl, water supply means for supplying water to fill said tank and bowl refill means, including a thermoplastic pliable, flexible tube having a first bore of a given internal diameter, said tube receiving water from said supply means for supplying fill water to said bowl simultaneously with the filling of said tank, wherein said bowl fills more rapidly than said tank, the improvement which comprises

a rigid thermoplastic restriction member inserted into an end of said flexible tube with external threads along its outer periphery having a second bore smaller than the first bore, said external threads having a tooth crest outer diameter greater than the first bore internal diameter for threaded interference engagement of the restriction member in the first bore, said second bore having a diameter such that the bowl refills in about the same period of time as the tank, to thereby preclude the bowl from filling faster than the tank; and

tool receiving means formed in said restriction member at one end to permit inserting the restriction member in said thermoplastic tube at a tube end.

* * * * *