US008104105B1

(12) **United States Patent**
Schuster et al.

(10) **Patent No.: US 8,104,105 B1**
(45) **Date of Patent: Jan. 31, 2012**

(54) **TOILET FILL VALVE WITH ADJUSTABLE BOWL FILL FLOW**

(75) Inventors: **Michael J. Schuster**, Joliet, IL (US); **Larry Schneider**, Wadsworth, IL (US)

(73) Assignee: **MJSI, Inc.**, Shorewood, IL (US)

(*) Notice: Subject to any disclaimer, the term of this patent is extended or adjusted under 35 U.S.C. 154(b) by 0 days.

(21) Appl. No.: **12/786,904**

(22) Filed: **May 25, 2010**

Related U.S. Application Data

(63) Continuation of application No. 10/958,797, filed on Oct. 5, 2004, now Pat. No. 7,743,436, which is a continuation-in-part of application No. 10/798,606, filed on Mar. 11, 2004, now Pat. No. 6,823,889.

(51) **Int. Cl.**
E03D 1/00 (2006.01)

(52) **U.S. Cl.** **4/415**; 4/324; 137/441

(58) **Field of Classification Search** 4/331, 324, 4/366, 415, 675; 285/91; 137/15.26, 432, 137/434, 436, 437, 441–444
See application file for complete search history.

(56) **References Cited**

U.S. PATENT DOCUMENTS

136,128	A	2/1873	Bralley
994,746	A	6/1911	Dwyer et al.
996,743	A	7/1911	Yancey
1,113,057	A	10/1914	Schumann
1,787,601	A	1/1931	Swanberg
2,087,503	A	7/1937	Clemmons
2,465,866	A	3/1949	Gaines
2,512,176	A	6/1950	Shaffer
2,736,037	A	2/1956	Hardie
2,791,235	A	5/1957	Smith
2,799,865	A	7/1957	Schuster
3,040,769	A	6/1962	Lamb
3,086,546	A	4/1963	Brown
3,172,128	A	3/1965	Ducey
3,321,972	A	5/1967	Goldtrap
3,457,947	A	7/1969	Fitzgerald
3,744,064	A	7/1973	Preston
3,762,395	A	10/1973	Taylor
3,986,216	A	10/1976	Davis et al.
3,994,628	A	11/1976	Kemper
4,007,498	A	2/1977	Pearson

(Continued)

OTHER PUBLICATIONS

US Patent 6,823,889, File History, 2004-2005 (Grandparent Patent to this Application).

(Continued)

Primary Examiner — Tuan N Nguyen
(74) *Attorney, Agent, or Firm* — Thomas, Kayden, Horstemeyer & Risley, LLP

(57) **ABSTRACT**

A toilet fill valve, toilet, and associated methods are provided with an adjustable bowl fill flow. In one embodiment, a toilet fill valve includes a water inlet and a first water outlet configured to supply water to a toilet tank. A bowl fill outlet port extends from a portion of a body of the toilet fill valve, the bowl fill outlet port being operatively coupled to the water inlet. The toilet fill valve includes a bowl fill valve having a bowl fill valve inlet port and a bowl fill valve outlet port, wherein the bowl fill valve inlet port is compatible with the bowl fill outlet port and the bowl fill valve inlet port being coupled to the bowl fill outlet port, the bowl fill valve radially extending from a portion of a body of the toilet fill valve. The bowl fill valve is configured to supply an adjustable flow of water out the bowl fill outlet port for filling a toilet bowl during a flush cycle of a toilet.

10 Claims, 9 Drawing Sheets

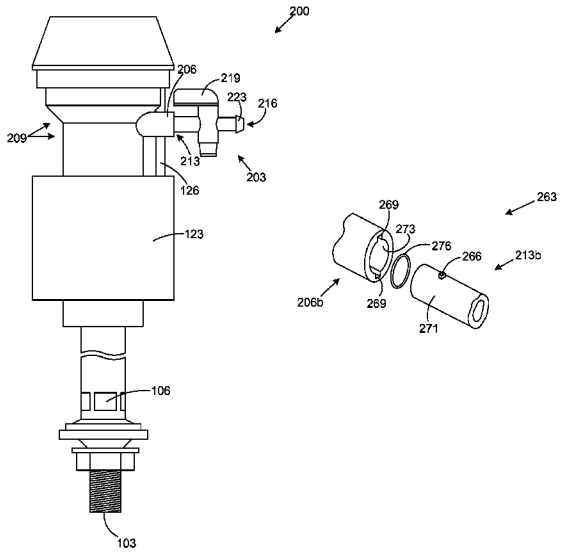

U.S. PATENT DOCUMENTS

4,017,916	A	4/1977	Pearson
4,032,822	A	6/1977	Un
4,090,532	A	5/1978	Story, Jr.
4,134,164	A	1/1979	Sanmartin Rial
4,145,775	A	3/1979	Butler
4,351,071	A	9/1982	Clar
4,392,260	A	7/1983	Bensen
4,420,845	A	12/1983	Antunez
4,505,231	A	3/1985	Syler
4,527,295	A	7/1985	Lacore
4,700,413	A	10/1987	Lopez
4,707,867	A	11/1987	Kawabe et al.
4,764,996	A	8/1988	Pino
4,770,388	A	9/1988	Carman
4,793,588	A	12/1988	Laverty, Jr.
4,898,124	A	2/1990	Granberg et al.
4,918,764	A	4/1990	Haselswerdt et al.
4,980,932	A	1/1991	Stemples
5,007,452	A	4/1991	Antunez
5,036,553	A	8/1991	Sanderson
5,052,060	A	10/1991	Makita et al.
5,083,323	A	1/1992	Cannan
5,134,729	A	8/1992	Shaw
5,228,152	A	7/1993	Fraley
5,232,011	A	8/1993	Royalty
5,245,710	A	9/1993	Haselswerdt et al.
5,327,931	A	7/1994	Royalty
5,362,026	A	11/1994	Kobayashi et al.
5,432,959	A	7/1995	Ellsworth et al.
5,442,820	A	8/1995	Becker
5,469,586	A	11/1995	Tsutsui et al.
5,542,448	A	8/1996	Campbell et al.
5,624,073	A	4/1997	Mueller et al.
5,708,991	A	1/1998	DeMarco
5,715,860	A	2/1998	Horad
5,742,951	A	4/1998	Wright et al.
5,775,366	A	7/1998	Ray
5,794,279	A	8/1998	Schwartz
5,862,537	A	1/1999	Osmond
5,926,868	A	7/1999	Bjerke
6,202,227	B1	3/2001	Gurowitz
6,209,576	B1	4/2001	Davis
6,219,856	B1	4/2001	Alles
6,263,519	B1	7/2001	Parsons et al.
6,295,660	B1	10/2001	Schuster
6,385,788	B1	5/2002	Wasielewski
6,409,221	B1	6/2002	Robinson et al.
6,560,790	B2	5/2003	Saar et al.
6,823,889	B1	11/2004	Schuster
2002/0092090	A1	7/2002	Johnson
2002/0162166	A1	11/2002	Saar et al.

OTHER PUBLICATIONS

U.S. Appl. No. 10/958,797, File History, 2004-2010 (Parent Patent to this Application).

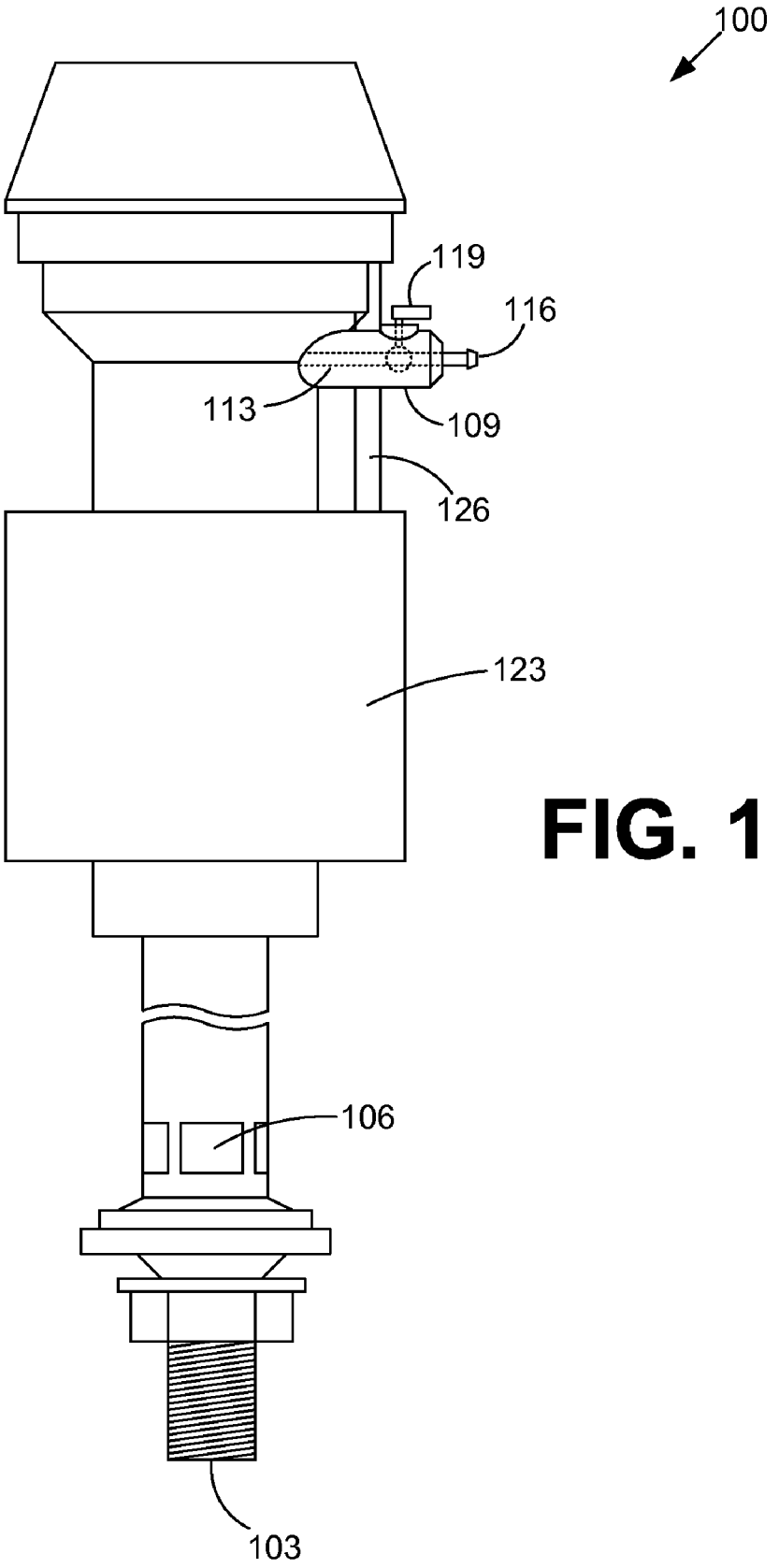

FIG. 1

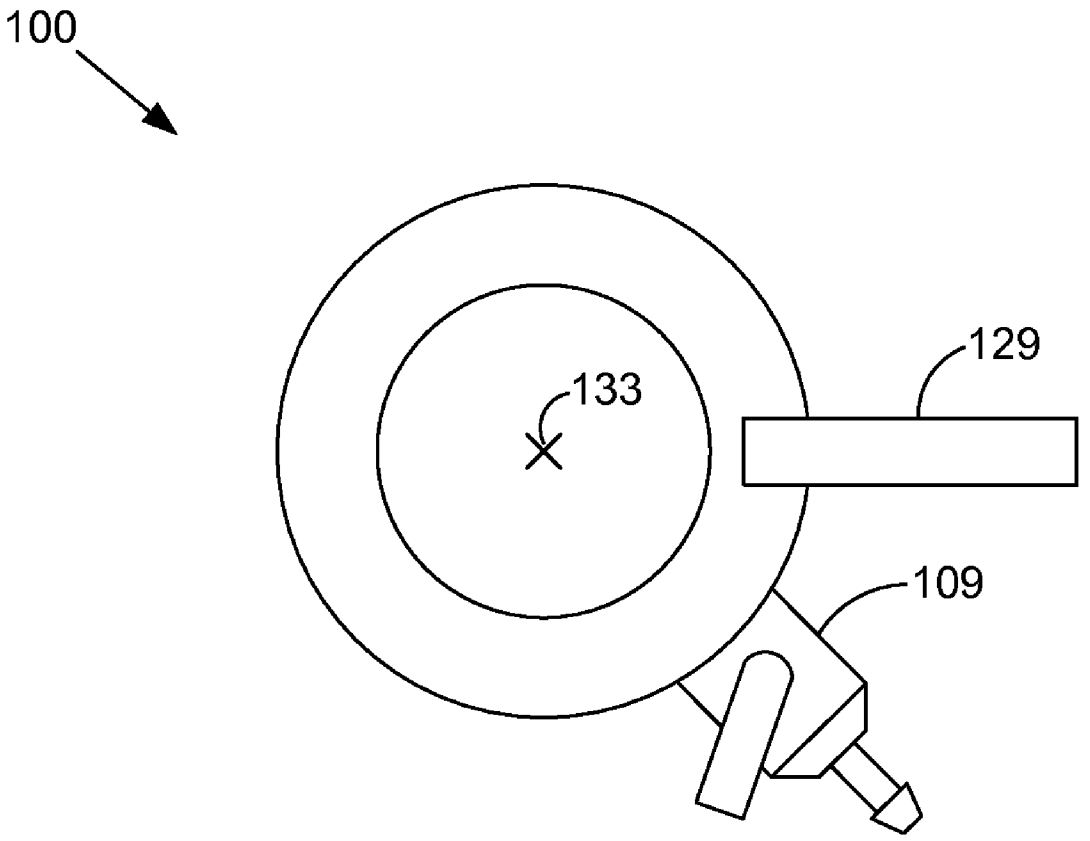

FIG. 2

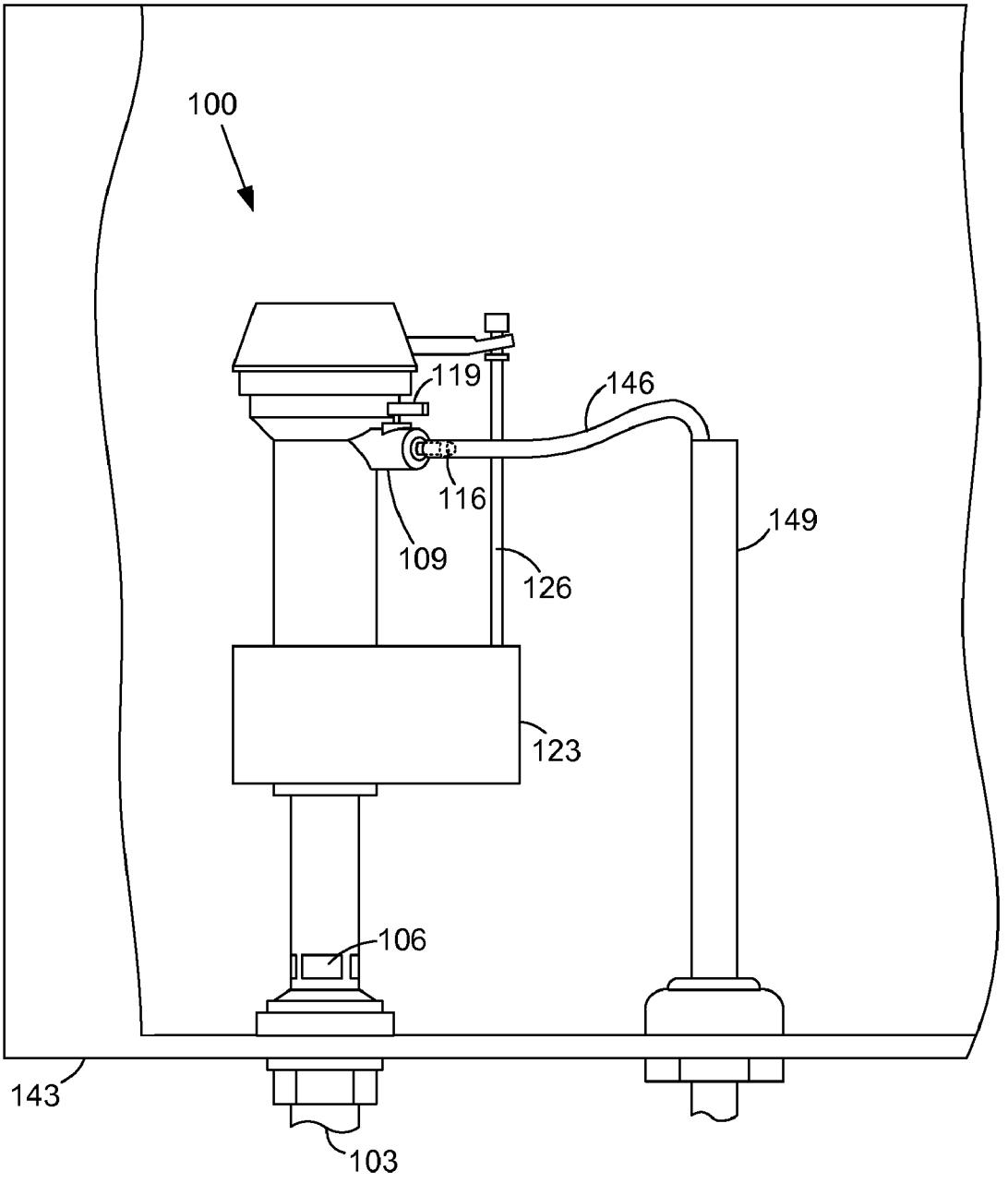

FIG. 3

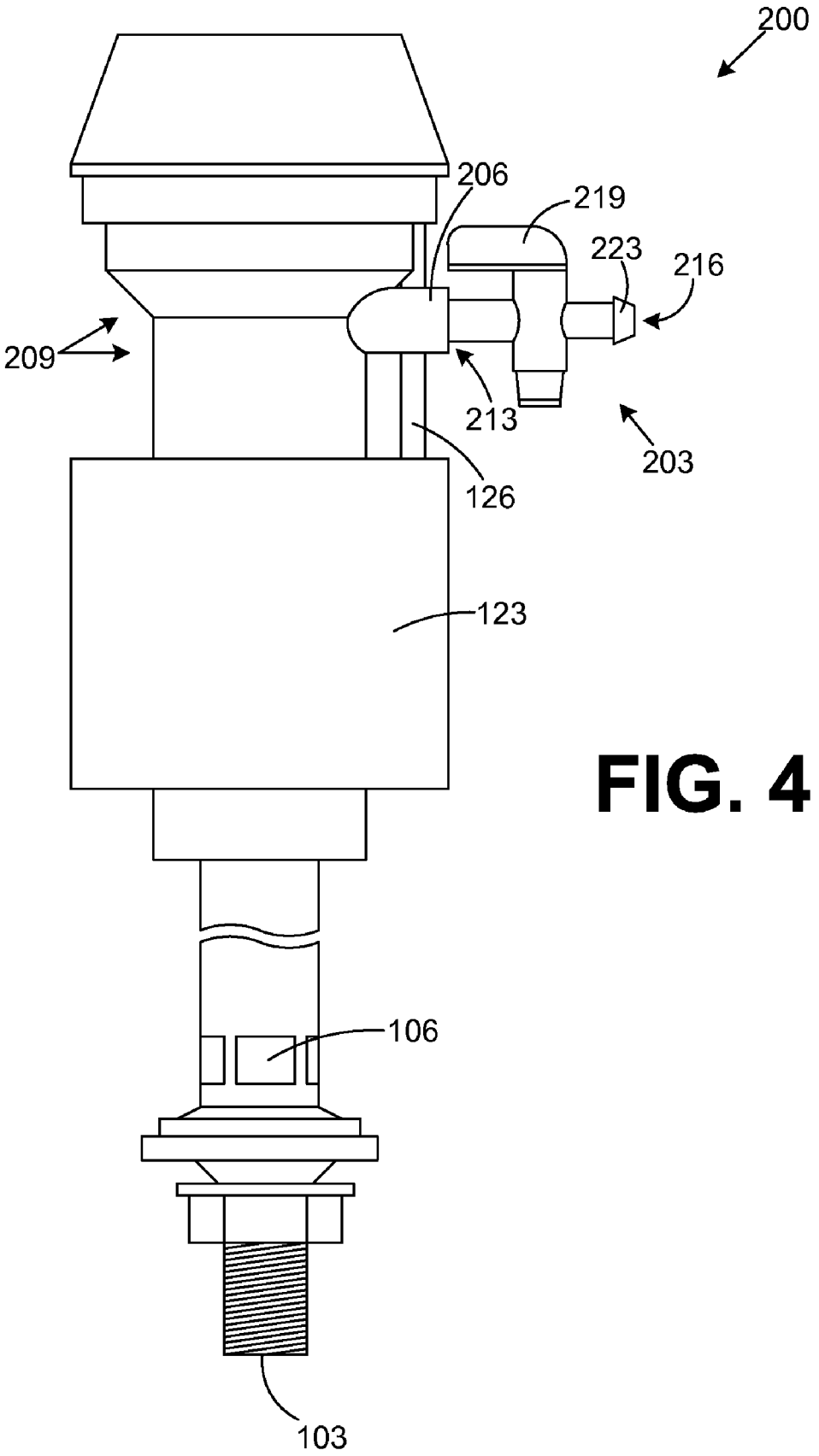

FIG. 4

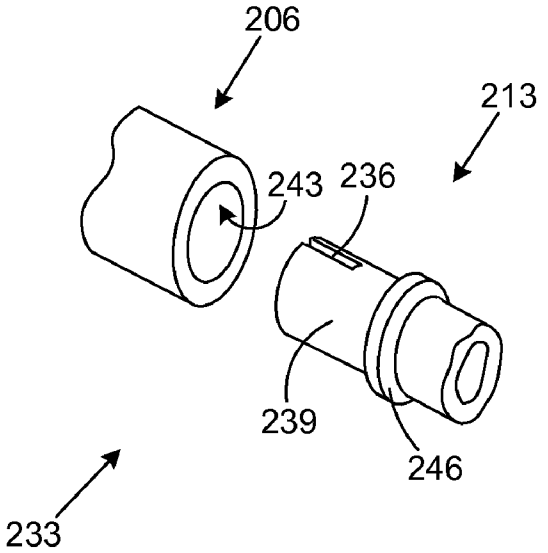

FIG. 5A

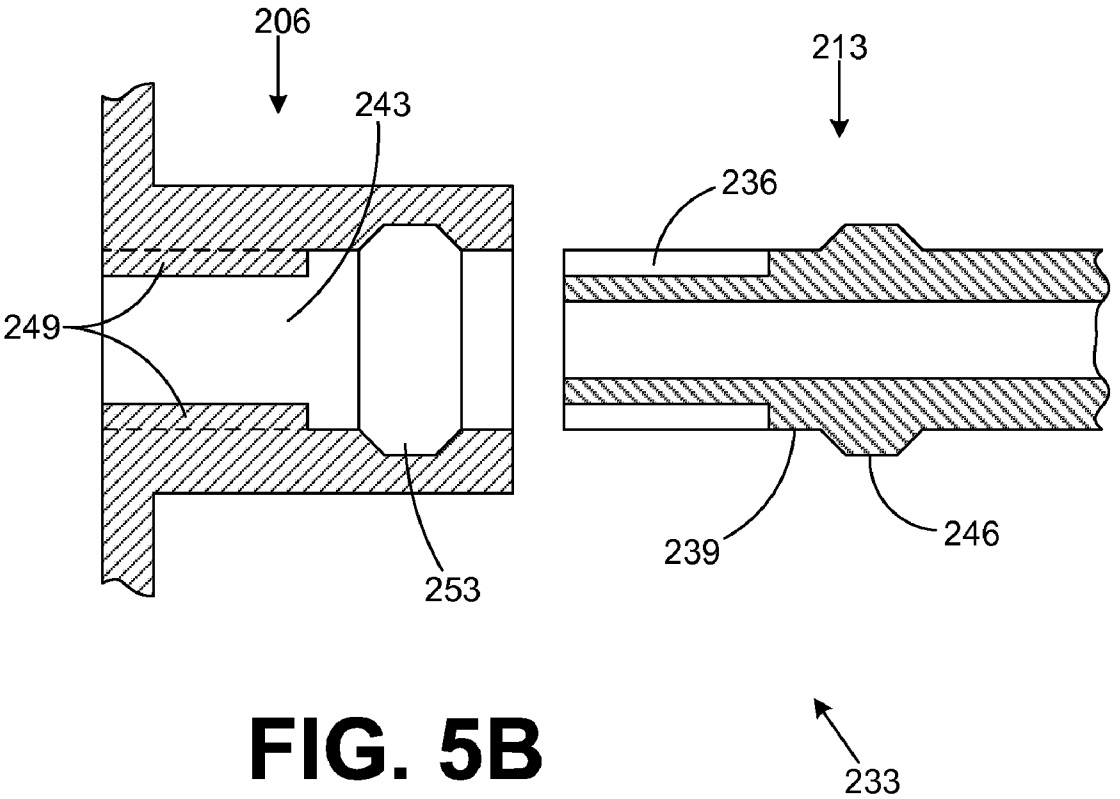

FIG. 5B

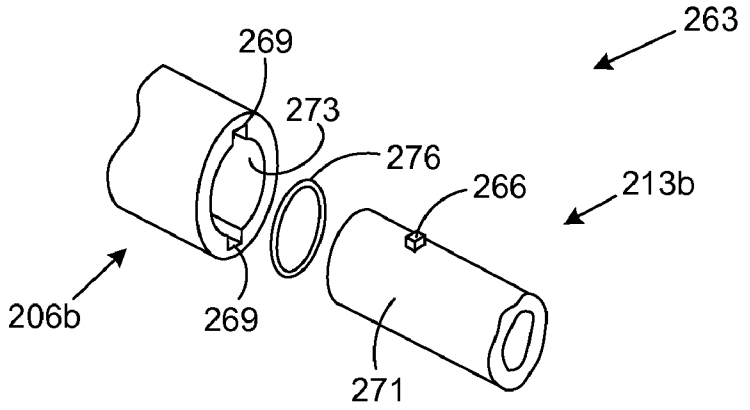

FIG. 6A

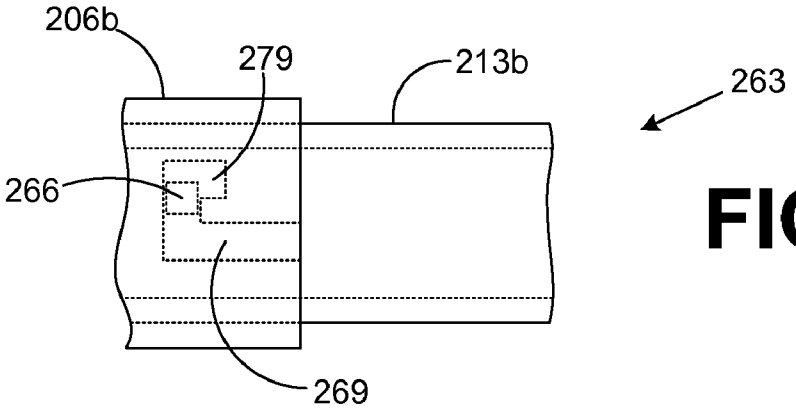

FIG. 6B

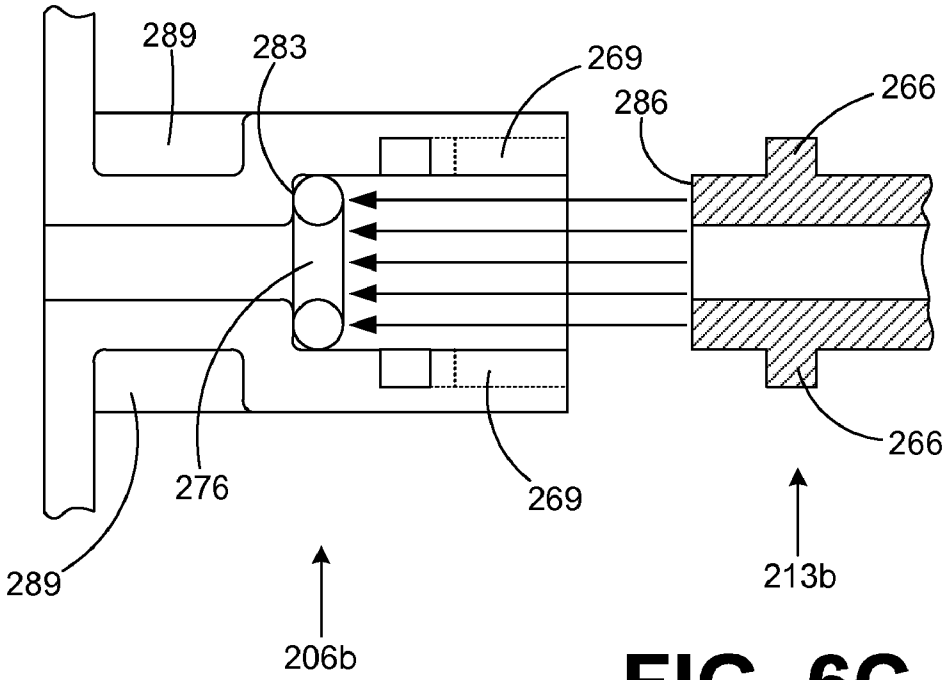

FIG. 6C

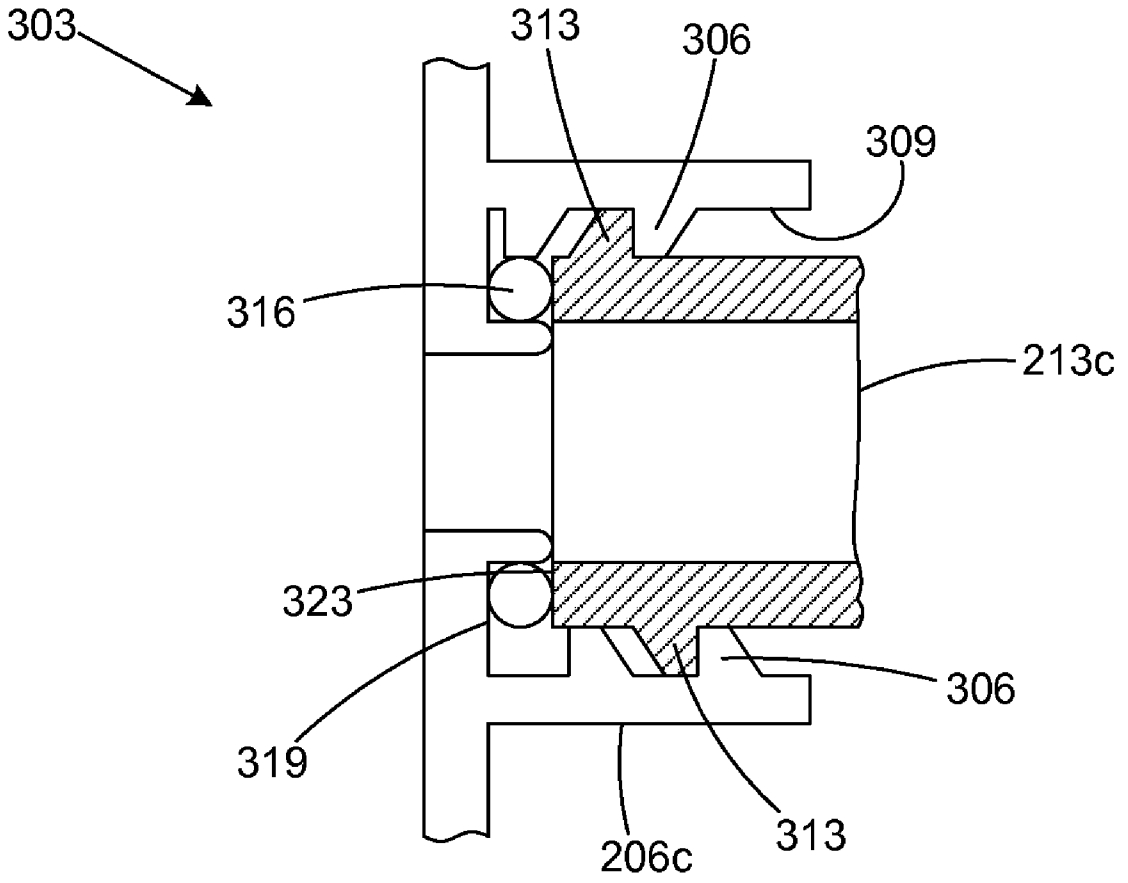

FIG. 7

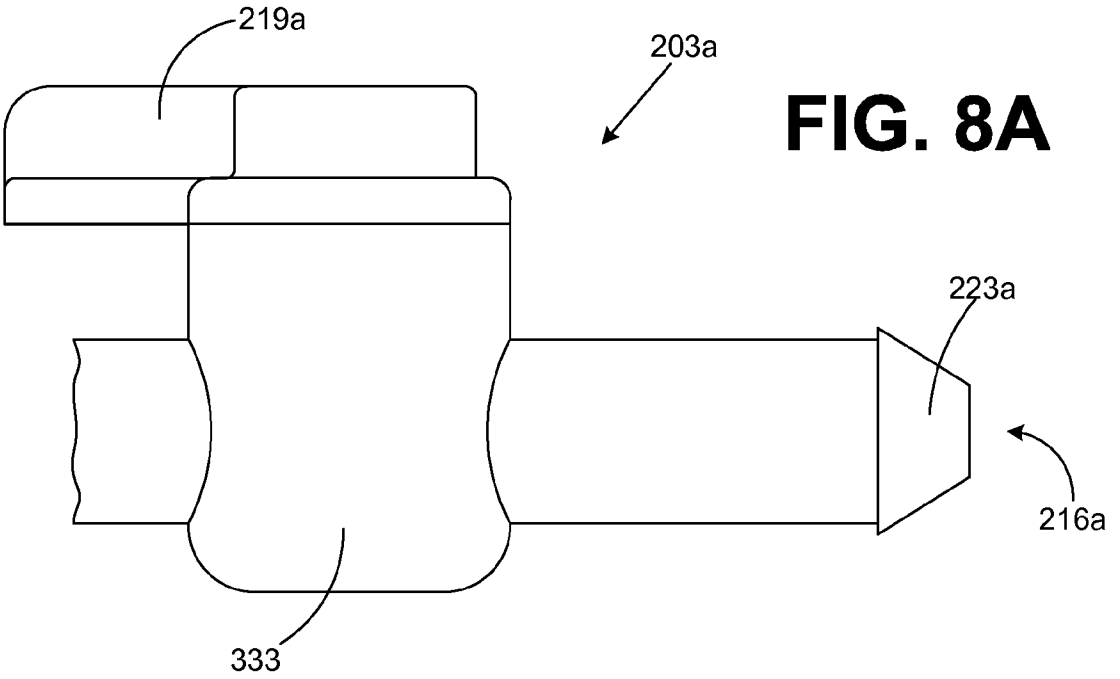

FIG. 8A

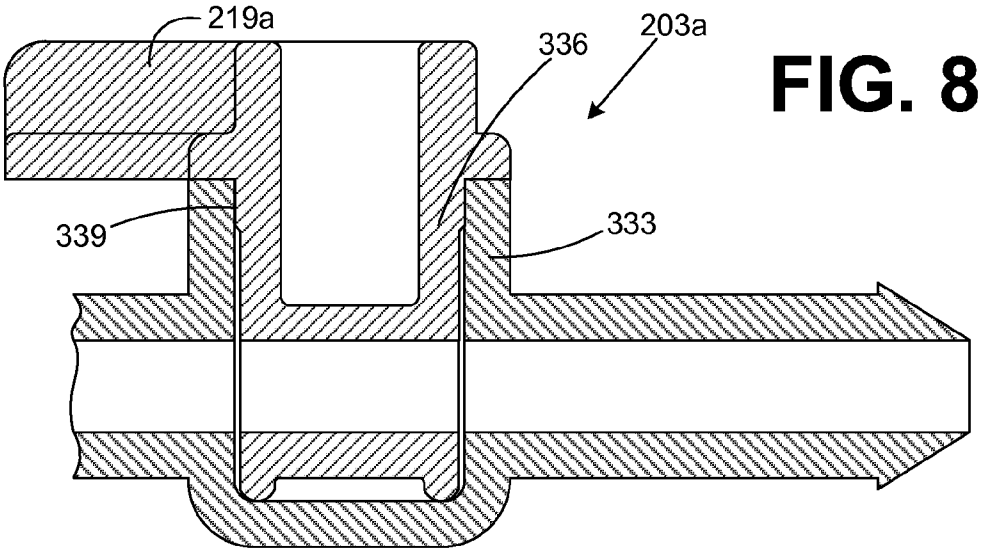

FIG. 8B

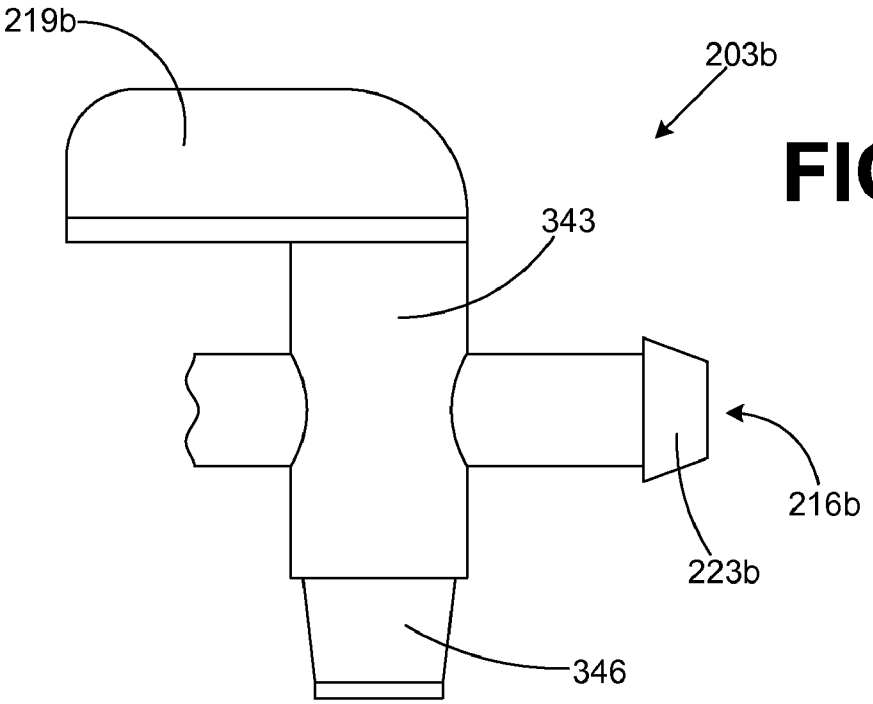

FIG. 9A

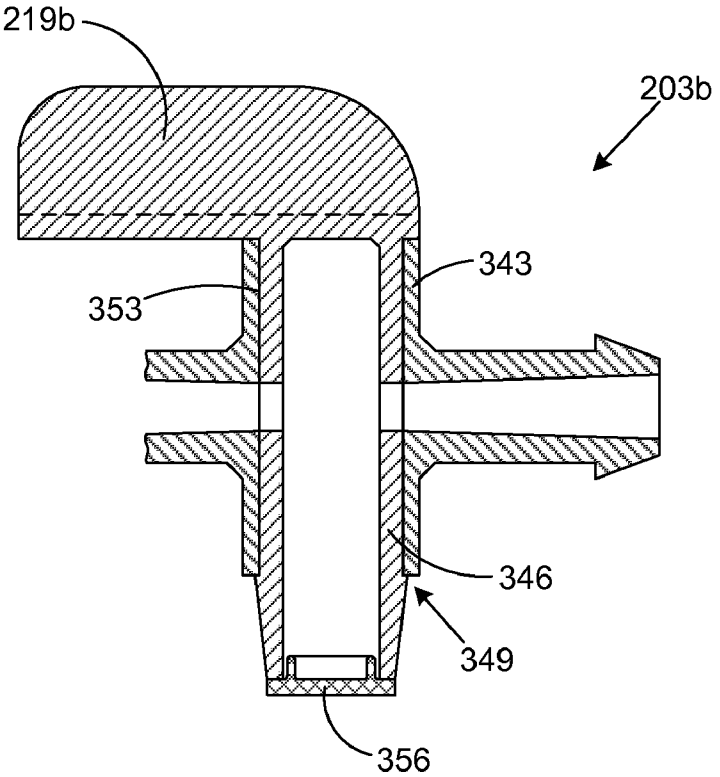

FIG. 9B

TOILET FILL VALVE WITH ADJUSTABLE BOWL FILL FLOW

CROSS REFERENCE TO RELATED APPLICATIONS

The present patent application is a Continuation Application of, and claims priority to, U.S. patent application entitled "Toilet Fill Valve with Adjustable Bowl Fill Flow" filed on Oct. 5, 2004 and assigned Ser. No. 10/958,797, which is a Continuation-in-Part Application of, and claims priority to, U.S. Pat. No. 6,823,889 entitled "Toilet Fill Valve with Adjustable Bowl Fill Flow" filed on Mar. 11, 2004.

BACKGROUND

A toilet fill valve in a toilet typically includes a water outlet that provides water for refilling a toilet bowl during a flush cycle. Unfortunately, the water flowing out of such conventional water outlets to fill a toilet bowl provide much more water than is necessary to fill the average toilet bowl. Consequently, much of the water that flows into a toilet bowl during the average flush cycle is lost down the drain. This translates into a loss of millions of gallons of water each year.

BRIEF DESCRIPTION OF THE SEVERAL VIEWS OF THE DRAWINGS

The invention can be understood with reference to the following drawings. The components in the drawings are not necessarily to scale. Also, in the drawings, like reference numerals designate corresponding parts throughout the several views.

FIG. **1** is a drawing of a side view of a toilet fill valve according to an embodiment of the present invention;

FIG. **2** is a drawing of a top view of the toilet fill valve of FIG. **1**;

FIG. **3** is a drawing of a cutaway view of a toilet tank within which the toilet fill valve of FIG. **1** is installed;

FIG. **4** is a drawing of a side view of a toilet fill valve according to an embodiment of the present invention;

FIGS. **5**A and **5**B are drawings that illustrate one example of a coupling of a bowl fill valve to the toilet fill valve of FIG. **4** according to an embodiment of the present invention;

FIGS. **6**A, **6**B, and **6**C are drawings that illustrate another example of a coupling of a bowl fill valve to the toilet fill valve of FIG. **4** according to an embodiment of the present invention;

FIG. **7** is a drawing that illustrates still another example of a coupling of a bowl fill valve to the toilet fill valve of FIG. **4** according to an embodiment of the present invention;

FIGS. **8**A and **8**B are drawings that illustrate an example of a bowl fill valve that is coupled to the toilet fill valve of FIG. **4** according to an embodiment of the present invention; and

FIGS. **9**A and **9**B are drawings that illustrate another example of a bowl fill valve that is coupled to the toilet fill valve of FIG. **4** according to an embodiment of the present invention.

DETAILED DESCRIPTION

With reference to FIG. **1**, shown is a toilet fill valve **100** according to an embodiment of the present invention. The toilet fill valve **100** includes a water inlet **103** at the bottom of the toilet fill valve **100** that is configured to be coupled to a water source outside of a toilet tank within which the toilet fill valve **100** is installed. The toilet fill valve **100** includes one or more water outlets **106** that are configured to supply water into a toilet tank within which the toilet fill valve **100** is installed. The toilet fill valve **100** may be, for example, a pilot style fill valve. However, it is understood that the toilet fill valve **100** may be any style of fill valve such as, for example, a ballcock valve, etc. The toilet fill valve **100** also includes a bowl fill valve **109** according to an embodiment of the present invention. The bowl fill valve **109** includes a bowl fill valve inlet **113** and a bowl fill valve outlet **116**. In addition, the bowl fill valve **109** includes a handle **119** that facilitates a manual adjustment of the bowl fill valve **109**.

The bowl fill valve **109** is integral with the toilet fill valve **100**. In this respect, the term "integral" refers to the fact that the bowl fill valve **109** and the toilet fill valve **100** comprise a single structure. In this respect, the bowl fill valve **109** may be included within the body of the toilet fill valve **100** as a portion of the toilet fill valve **100** in a single piece construction. Specifically, the bowl fill valve **109** may be molded as a portion of the toilet fill valve **100** or it may be snapped or clamped into place, or it may be attached to the toilet fill valve **100** in some other manner, etc.

Within the toilet fill valve **100**, the bowl fill valve inlet **113** is operatively coupled to the water inlet **103**. In this respect, when the toilet fill valve **100** is open and water flows from the water inlet **103** to the water outlets **106** and into a toilet tank, an amount of water is also supplied to the bowl fill valve inlet **113** that flows through the bowl fill valve **109** and out the bowl fill valve outlet **116**. By virtue of the manual setting of the handle **119** of the bowl fill valve **109**, the flow of water through the bowl fill valve **109** is regulated. In this manner, the flow of water is regulated so that enough water flows out of the bowl fill valve **109** to fill a toilet bowl without wasting any water down a drain.

Thus, the bowl fill valve **109** is configured to supply an adjustable flow of water out of the bowl fill outlet **116** that is directed to a toilet bowl during a flush cycle of a toilet to fill the toilet bowl. The flow of water is adjusted so that just enough flows out of bowl fill valve **109** so as to fill the toilet bowl without wasting any water.

The toilet fill valve **100** includes a float **123** that is operatively coupled to an actuating arm (not shown) by a translating stem **126**. The float **123** floats on the water within a toilet tank and, depending on the location of the float **123** along the toilet fill valve **100**, the toilet fill valve **100** is open or closed as can be appreciated by those with ordinary skill in the art. The bowl fill valve **109** and the actuating arm (not shown) are each located on the toilet fill valve **100** so as to prevent any interference between the bowl fill valve **109** and the translational stem **126** or the actuating arm as will be discussed.

According to an embodiment of the present invention, the bowl fill valve **109** may include a number of biased positions. In this respect, the movement of the handle **119** may cause the bowl fill valve **109** to move from one predefined biased position to other predefined biased positions. In this respect, various mechanisms such as tabs, snaps, or other position biasing structures may be employed. The biased positions of the bowl fill valve **109** help ensure that the bowl fill valve **109** remains in a given setting selected by a user by a manual manipulation of the handle **119** during the normal course of operation of the toilet fill valve **100**. Thus, by virtue of the biased positions, the bowl fill valve **109** is prevented from moving out of a desired position set by a user over a long period of use due to vibration and other factors as can be appreciated by those with ordinary skill in the art.

The bowl fill valve **109** may be, for example, a ball valve, a gate valve, a globe valve, a plug valve, a diaphragm valve, a butterfly valve, a needle valve, a sliding gate, a quick turn

valve, a knife valve or any other appropriate type of valve as can be appreciated by those with ordinary skill in the art.

To operate the toilet fill valve **100**, the toilet fill valve **100** is first installed within a toilet tank. When a toilet is flushed and the tank is drained, the float **123** moves downward along the toilet fill valve **100** and, consequently, the toilet fill valve **100** opens to allow water to flow from the water inlet **103** and out the water outlets **106** into a toilet tank. At the same time, water flows into the bowl fill valve inlet **113** and out the bowl fill valve outlet **116** through the bowl fill valve **109**. Based on the setting of the handle **119**, the bowl fill valve **109** determines the precise flow rate of the water that flows out the bowl fill valve outlet **116**. A tube is typically employed to direct the water flowing out the bowl fill valve outlet **116** to an overflow tube in the toilet tank. In this respect, the water flowing out the bowl fill valve outlet **116** refills the toilet bowl of the respective toilet.

Referring next to FIG. **2**, shown is a top view of the toilet fill valve **100** according to an embodiment of the present invention. In this respect, the actuating arm **129** of the bowl fill valve **100** is seen with respect to the bowl fill valve **109**. The actuating arm **129** is coupled to the float by way of the translational stem **126** (FIG. **1**). In this respect, the actuating arm **129** extends in an orthogonal direction relative to a longitudinal axis **133** of the toilet fill valve **100**. The longitudinal axis **133** is centered in the toilet fill valve **100** along the length of the toilet fill valve **100**. Also, the bowl fill valve **109** extends in an orthogonal direction relative to the longitudinal axis **133** of the toilet fill valve **100**. In order to prevent interference between the bowl fill valve **109** and the translational stem **126** or the actuating arm **129**, the actuating arm **129** is angularly offset relative to the bowl fill valve **109** as shown. In this respect, the translational stem **126** is coupled to the free end of the actuating arm **129**. By virtue of the angular offset between the bowl fill valve **109** and the actuating arm **129**, the operation of the bowl fill valve **109** does not interfere with the operation of the toilet fill valve **100** itself by virtue of the fact that the float **123** (FIG. **1**) can move freely with the movement of the translational stem **126** in order for proper operation of the toilet fill valve **100**.

With reference to FIG. **3**, shown is the toilet fill valve **100** as installed within a toilet tank **143** according to an embodiment of the present invention. In this respect, the toilet fill valve **100** includes the water inlet **103** that is coupled to a water source outside of the toilet tank **143**. The toilet fill valve **100** also includes one or more water outlets **106** that direct a flow of water into the toilet tank **143** during the operation of a flush cycle. The bowl fill valve **109** includes the bowl fill valve inlet (not shown) and the bowl fill valve outlet **116**, where the bowl fill valve inlet is operatively coupled to the water inlet **103** as described above. Also, the bowl fill valve **109** is integrated with the body of the toilet fill valve **100** as described above.

A tube **146** is coupled to the bowl fill valve outlet **116** and is directed into the overflow tube **149** of the toilet tank **143**. The tube **146** directs water that flows out of the bowl fill valve outlet **116** into the overflow tube **149** and refills the toilet bowl associated with the toilet tank **143** as can be appreciated by those with ordinary skill in the art. The bowl fill valve **109** is configured to supply the adjustable flow of water out the bowl fill valve outlet through the tube **146** and into the overflow tube **149** for filling the toilet bowl during the flush cycle of the toilet. In this respect, no pressure is seen within the tube **146**. Specifically, the fact that the bowl fill valve **109** is integral with the toilet fill valve **100** prevents the creation of a pressure head in the tube **146** as would be the case if the bowl fill valve **109** were included in the middle of the tube **146**. The fact that a pressure head is not created in any portion of the tube **146** prevents the tube **146** from working its way off of the bowl fill valve outlet **116** over time.

When installed, the bowl fill valve **109** is calibrated for the particular flush cycle of the toilet within which the toilet fill valve **100** is installed. To calibrate the bowl fill valve **109**, a user first determines the water level in the toilet bowl when the toilet bowl is full of water. This gives the user a starting and an ending point for determining when the toilet bowl of the respective toilet is full. Next, the bowl fill valve handle **109** is adjusted so that the bowl fill valve **109** is placed in a predefined position that allows a predefined flow of water to refill the toilet bowl. In this manner, one adjusts the actual flow of water that refills the toilet bowl. Thereafter, the user flushes the toilet itself. Next, the user determines if the flow of water into the toilet bowl by virtue of the adjustments made to the bowl fill valve **109** is adequate to refill the toilet bowl during the flush cycle. This may be determined, by identifying whether the level of the water in the toilet bowl reaches the full level determined at the beginning of the bowl fill valve calibration above.

The flow of water from the bowl fill valve **109** should be set so as to ensure that the water level in the toilet bowl reaches the full level at about the same time that the flush cycle ends. In other words, the level of water in the toilet bowl should reach its highest level at the same time that the flush cycle ends. This prevents any water from being lost down the drain associated with the toilet.

If the amount of water that flows into the toilet bowl is inadequate to refill the toilet bowl during the flush cycle as described above, then one should repeat the steps of adjusting the bowl fill valve, flushing the toilet, and then once again determining if the flow of water into the toilet bowl is adequate to refill the toilet bowl during a flush cycle.

Ultimately, during use of the toilet that includes the toilet fill valve **100** and the toilet tank **143**, a user flushes the toilet and a predetermined flow of water exits the bowl fill valve outlet **116** and is directed into the toilet bowl. After the toilet tank has drained during the flush cycle, a flapper closes in the toilet tank and the toilet tank refills. During the refilling of the tank, the water supplied by the bowl fill valve **109** fills the toilet bowl itself. The amount of water supplied by the bowl fill valve in the time it takes to refill the toilet tank should be approximately equal to the amount of water needed to fill the toilet bowl. By virtue of the fact that the bowl fill valve **100** is integrated within the toilet fill valve **100**, a pressure head is prevented from being created due to any potential pinching of the tube **146** or other similar adjustment mechanism.

With reference to FIG. **4**, shown is a toilet fill valve **200** according to another embodiment of the present invention. The toilet fill valve **200** includes the same water inlet **103** and the water outlets **106** as the toilet fill valve **100** (FIG. **1**). The toilet fill valve **200** also includes the float **123** and the translational stem **126** as was described with reference to the toilet fill valve **100**. In addition, the toilet fill valve **200** includes a bowl fill valve **203** that is integral with the toilet fill valve **200** as will be described. As stated above, the term "integral" refers to the fact that the bowl fill valve **200** and the toilet fill valve **100** comprise a single structure. In this embodiment, the bowl fill valve **200** is a separate component that is attached the body of the toilet fill valve **100**, thereby forming the integral, single structure.

The toilet fill valve **200** also includes a bowl fill outlet port **206** that radially extends from a portion of a body **209** of the toilet fill valve **200**. In this respect, the bowl fill outlet port is operatively coupled to the water inlet **103**. In particular, when the toilet fill valve **200** is in an "on" state, water that flows in

the water inlet **103** flows out of both the water outlets **106** and the bowl fill outlet port **206**. The water flowing out of the bowl fill outlet port **206** flows through the bowl fill valve **203** as will be described.

The bowl fill valve **203** includes a bowl fill valve inlet port **213** and a bowl fill valve outlet port **216**. The bowl fill valve inlet port **213** is compatible with the bowl fill outlet port **206**, where the bowl fill valve inlet port **213** is coupled to the bowl fill outlet port **206** when the bowl fill valve **203** is coupled or affixed to the toilet fill valve **200**. The bowl fill valve inlet port **213** is compatible with the bowl fill outlet port **206** in the sense that both the bowl fill valve inlet port **213** and the bowl fill outlet port **206** comprise various structures that couple together when the bowl fill valve **203** is connected to the bowl fill outlet port **206** as will be described. In particular, various embodiments of the coupling between the bowl fill valve inlet port **213** and the bowl fill outlet port **206** are described herein.

The bowl fill valve **203** also includes a handle that may be adjusted by hand to adjust a flow of water through the bowl fill valve **203** during a flush operation of a toilet in which the toilet fill valve **200** is installed. Typically, the handle **219** is initially adjusted to a desired position when the toilet fill valve **200** is installed and generally remains in such position for the continued operation of the toilet fill valve **200**. During the life cycle of the bowl fill valve **203**, it may be possible that the bowl fill valve **203** is adjusted to take into account various changes in the operation of the toilet fill valve **200** such as, for example, changes in pressure or other operational changes.

The bowl fill valve **203** also includes a nipple **223**. The nipple **223** is adapted to mate with a tube that extends from the bowl fill valve outlet port **216** to the overfill tube **149** (FIG. **3**) in a manner similar to that as shown in FIG. **3** with respect to the tube **146** (FIG. **3**) that extends from the nipple **116** (FIG. **3**) to the overflow tube **149** (FIG. **3**). The bowl fill valve **203** extends beyond the bowl fill outlet port **206** in a radial direction with respect to the portion of the body **209** of the toilet fill valve **200**.

In some embodiments, the bowl fill outlet port **206** may comprise a female receptacle and, correspondingly, the bowl fill valve inlet port **213** may comprise a male end compatible with the female receptacle. Alternatively, the bowl fill valve inlet port **213** may comprise a female receptacle and the bowl fill outlet port **206** may comprise a male end compatible with such female receptacle.

The toilet fill valve **200** further includes an actuating arm (not shown) that extends in a radial direction that is orthogonal relative to a longitudinal axis of the toilet fill valve **200** in a manner similar as that described with reference to the toilet fill valve **100** (FIG. **1**). The longitudinal axis is defined as an axis that runs from the water inlet **103** through the body **209** of the toilet fill valve **200** and out the top of the toilet fill valve **200**. In one embodiment, the bowl fill valve **203** extends radially in an orthogonal direction relative to such longitudinal axis of the toilet fill valve **200**. Also, in one embodiment, the actuating arm is angularly offset relative to the bowl fill valve **203** to prevent interference between the bowl fill valve **203** and the translational stem **126** that extends from the float **123** to a free end of the actuating arm. This allows the float **123** to move up and down and to engage the actuating arm during the normal operation of the toilet fill valve **200** during various flush cycles.

In addition, the bowl fill valve **203** may be constructed with a number of biased positions that help prevent the bowl fill valve **203** from moving out of adjustment over time when the force of pressure develops therein. Also, the biased positions aid a user in actual adjustment of the bowl fill valve **203** as can be appreciated.

The toilet fill valve **200** provides an advantage in that the body **209** of the toilet fill valve **200** may be constructed with the bowl fill outlet port **206** using a molding process that is much less complex than attempting to mold the entire bowl fill valve **203** within the structure of the body **209** as a single molded construction as was described with reference to one embodiment of the toilet fill valve **100**. In this regard, the bowl fill valve **203** may be constructed as a separate component to the body **209** of the toilet fill valve **200** and assembled for distribution to end users.

Due to the fact that the bowl fill valve **203** is affixed to the toilet fill valve **200** through the coupling of the bowl fill outlet port **206** with the bowl fill valve inlet port **213**, then a pressure head that develops within the bowl fill valve **203** due to the adjustment of the handle **219** during operation of the toilet fill valve **200** will not cause the bowl fill valve **203** to fall off of the toilet fill valve **200**. Thus, when the toilet fill valve **200** is installed in a toilet tank **143**, a user may adjust the opening of the bowl fill valve **203** by adjusting the handle **219** until a desired flow of water flows out of the bowl fill valve outlet port **216** into a tube and into the overflow tube **149** of a toilet. This flow of water is typically established to refill a toilet bowl of a toilet. In this regard, the flow of the water into the overflow tube **149** that refills the toilet bowl during a toilet flush operation may be regulated or adjusted so as to minimize or eliminate the amount of water that is lost down the drain of a toilet due to over filling of the toilet bowl during a flush cycle of a toilet. In one embodiment, the bowl fill valve **203** is adjusted until the filling of the toilet bowl of the toilet coincides with the end of the flush cycle, thereby resulting in little or no loss of water.

Referring next to FIG. **5**A, shown is a coupling **233** between one embodiment of the bowl fill outlet port **206**, denoted herein as bowl fill outlet port **206***a*, and an embodiment of the bowl fill valve inlet port **213**, denote herein as bowl fill valve inlet port **213***a*. The bowl fill valve inlet port **213***a* includes a slot **236** in a side wall **239**. The bowl fill outlet port **206***a* comprises a rib (not shown) that extends from a side wall **243** that is inserted into the slot **236** when the bowl fill inlet port **213***a* is inserted into the bowl fill outlet port **206***a*. The mating of the slot **236** with the rib prevents the rotation of the bowl fill valve **213***a* with respect to the bowl fill outlet port **206***a* when the bowl fill valve inlet port **213***a* is inserted into the bowl fill outlet port **206***a*. Alternatively, there may be a number of slots **236** in the side wall **239** of the bowl fill valve inlet port **213***a* and a corresponding number of ribs extending from the side wall **243** of the bowl fill outlet port **206***a*.

The bowl fill valve inlet port **213***a* also includes an annular protrusion **246** that extends from the side wall **239** of the bowl fill valve inlet port **213***a*. Correspondingly, an annular groove (not shown) in the side wall **243** of the bowl fill valve outlet port **206***a* is provided that mates up with the annular protrusion **246** when the bowl fill valve inlet port **213** is inserted into the bowl fill outlet port **206***a*. In this respect, the annular protrusion **246** is snap fit into the annular groove (not shown), thereby affixing the bowl fill valve **203***a* to the bowl fill valve outlet port **206***a*.

Turning then to FIG. **5**B, shown is a cutaway view of the coupling **233** between the bowl fill outlet port **206***a* and the bowl fill valve inlet port **213***a* according to an embodiment of the present invention. In this respect, the bowl fill outlet port **206***a* is depicted with two ribs **249** extending from the side wall **243** within the bowl fill outlet port **206***a*. Also, the bowl fill outlet port **206***a* includes the annular groove **253** into which the annular protrusion **246** snaps when the bowl fill valve inlet port **213***a* is inserted into the bowl fill outlet port **206***a*. In this respect, the mating of the annular protrusion **246**

with the annular groove **253** fixes the bowl fill valve **203** to the bowl fill outlet port **206***a*. In this respect, the bowl fill valve **203** becomes an integral portion of the toilet fill valve **200**.

Also, the fit between the annular protrusion **246** is a snug fit that forms a seal between the bowl fill outlet port **206***a* and the bowl fill valve inlet port **213***a* that prevents the leakage of water from the coupling **233** during a flush cycle. Alternatively, a snug fit may occur between other mating surfaces of the bowl fill outlet port **206***a* and the bowl fill valve inlet port **213***a* that prevents leakage of water from the coupling **233**.

With reference to FIGS. **5**A and **5**B, even though the slots **236** are depicted as being formed within the side wall **239** of the bowl fill valve inlet port **213** and the ribs **249** extend from the side wall **243** within the bowl fill outlet port **206**, it is possible that this arrangement may be reversed where the slots **236** are formed in the side wall **243** of the bowl fill outlet port **206***a* and the ribs **249** extend from the side wall **239** of the bowl fill valve inlet port **213***a*. In addition, the annular groove **253** may be created in the side wall **239** of the bowl fill valve inlet port **213** and the annular projection **246** may extend inward from the side wall **243** within the bowl fill outlet port **206** in a reverse arrangement than that shown with reference to FIG. **5**B.

Referring next to FIGS. **6**A, **6**B, and **6**C, shown is a coupling **263** between another embodiment of the bowl fill outlet port **206**, denoted herein as bowl fill outlet port **206***b*, and another embodiment of the bowl fill valve inlet port **213**, denoted herein as bowl fill valve inlet port **213***b*. The bowl fill valve inlet port **213***b* includes at least two locking ears **266** that mate with corresponding locking grooves **269** in the bowl fill outlet port **206***b*. In particular, the locking ears **266** extend from a side wall **271** of the bowl fill valve inlet port **213***b*. The locking grooves **269** are disposed in the side wall **273** of the bowl fill outlet port **206***b*. When the bowl fill valve **203** is inserted and twisted into the bowl fill outlet port **206***b*, each of the locking ears **266** is situated in a locking position of one of the locking grooves **269** as will be described. The coupling **263** further comprises a sealing ring **276** that may be, for example, a rubber O-ring or other type of sealing ring. The sealing ring **276** is compressed between an end of the bowl fill valve inlet port **213***b* and a seat within the bowl fill outlet port **206***b* as we described. While at least two locking ears **266** and corresponding locking grooves **269** are shown, it is possible that a design may be employed that comprises a single locking ear **266** and a single corresponding locking groove **269**.

With reference to FIG. **6**B, shown is a portion of the bowl fill valve inlet port **213***b* and the bowl fill outlet port **206***b* as the bowl fill valve inlet port **213***b* is inserted into the bowl fill outlet port **206***b* and is partially rotated such that the locking ears **266** are almost located in the locking positions **279**. In this respect, each of the locking grooves **269** is a "J" formation. The J formation of the locking grooves **269** allows the locking ears **266** to slide down and around the partial loop of the J and seat in the locking position **279** such that the sealing ring **276** exerts a force against the end of the bowl fill valve inlet port **213***b*, thereby pushing the locking ears **266** into the locking positions **279** of the locking grooves **269** and holding the locking ears **266** in place. This ensures that the bowl fill valve **203** remains coupled to the bowl fill outlet port **206***b*.

With reference to FIG. **6**C, shown is a cutaway view of the coupling **263** between the bowl fill outlet port **206***b* and the bowl fill valve inlet port **213***b*. In this respect, the bowl fill valve inlet port **213***b* is inserted into the bowl fill outlet port **206***b* in a manner such that the locking ears **266** mate with the locking grooves **269**. When the locking ears **266** reach the bottom of the "J" of the locking grooves **269**, then the bowl fill valve **203** is rotated so that the locking ears **266** may be seated in the locking positions **279**.

The sealing ring **276** is seated against a portion of the bowl fill outlet port **206***b*. In one embodiment, this portion is a seating face **283** of the bowl fill outlet port **206***b*. Also, a portion of the bowl fill valve inlet port **213***b* is mated against the sealing ring **276**. In one embodiment, this portion of the bowl fill valve inlet port **213***b* is an end face **286** such that the sealing ring is clamped between the seating face **283** and the end face **286** when the bowl fill valve inlet port **213***b* is inserted fully into the bowl fill outlet port **206***b*. The clamping or compression of the sealing ring **276** pushes the locking ears **266** into the locking position **279** of the locking grooves **269** once the bowl fill valve **203** is rotated accordingly. In this respect, the compressive force of the sealing ring **276** helps keep the bowl fill valve inlet port **213***b* of the bowl fill valve **203** mated with the bowl fill outlet port **206***b*. Also, the sealing ring **276** forms a seal between the bowl fill outlet port **206***b* and the bowl fill valve inlet port **213***b* that prevents leakage of water from the coupling **263** between the bowl fill outlet port **206***b* and the bowl fill valve inlet port **213***b*.

The locking positions **279** of the locking grooves and the locking ears **266** are located such that when the bowl fill valve **203** is rotated thereby positioning the locking ears **266** in the locking positions **279**, the bowl fill valve **203** is substantially upright. In addition, the bowl fill outlet port **206***b* includes structural ribs **289** that provide greater structural stability for the bowl fill outlet port **206***b* and its attachment to the portion of the body **209** of the toilet fill valve **200** (FIG. **4**). Alternatively, the bowl fill outlet port **206***b* may be attached without the structural ribs **289**. In addition, it may be the case that the locking ears **266** extend inward from the side wall **273** of the bowl fill outlet port **206***b* and that the locking grooves **269** be situated within the side wall **271** of the bowl fill valve inlet port **213***b*.

Referring next to FIG. **7**, shown is a cutaway view of a coupling **303** between a third embodiment of the bowl fill outlet port **206**, denoted herein as bowl fill outlet port **206***c* and the bowl fill valve inlet port **213** denoted herein as bowl fill valve inlet port **213***c*. In this respect, the bowl fill outlet port **206***c* includes a first thread **306** disposed on a side wall **309** of the bowl fill outlet port **206***c*. A second thread **313** is disposed on a side wall of the bowl fill valve inlet port **213***c* that engages the first thread **306** disposed in the side wall of the bowl fill outlet port **206***c*. The bowl fill valve inlet port **213***c* is coupled to the bowl fill outlet port **206***c* by way of the first and second threads **306** and **313**. Specifically, the bowl fill valve **203** may be screwed onto the bowl fill outlet port **206***c* by virtue of the threads **306** and **313**. When the bowl fill valve inlet port **213***c* is screwed into the bowl fill valve outlet port **206***c*, a sealing ring **316** is clamped between portions of the bowl fill valve inlet port **213***c* and the bowl fill outlet port **206***c* such as a seating face **319** of the bowl fill outlet port **206***c* and an end face **323** of the bowl fill valve inlet port **213***c*. In this respect, a seal is formed between the bowl fill outlet port **206***c* and the bowl fill valve inlet port **213***c*. Alternatively, the threads **306** and **313** may be specified so as to form an adequate seal between the bowl fill valve outlet port **206***c* and the bowl fill valve inlet port **213***c* for purposes of preventing leakage. As an additional alternative, the seating face **319** and the end face **323** or other portions of the bowl fill valve inlet port **213***c* and the bowl fill outlet port **206***c* may be compressed together to form a seal to prevent leakage. Alternatively, the bowl fill outlet port **206***c* and the bowl fill valve inlet port **213***c* may be designed to include mating surfaces that perform a friction seal as can be appreciated.

Referring next to FIG. **8***a*, shown is one embodiment of the bowl fill valve **203**, denoted herein as bowl fill valve **203***a* according to an embodiment of the present invention. The bowl fill valve **203***a* includes a handle **219***a* and a valve body **333**. The bowl fill valve **203***a* includes the bowl fill valve outlet port **216***a* and the bowl fill valve inlet port (not shown) the bowl fill outlet port **216***a* includes a nipple **223***a*.

Referring then to FIG. **8***b*, shown is a cutaway view of the bowl fill valve **203***a* according to an embodiment of the present invention. In this respect, the valve body **333** forms a cavity within which a valve **336** is inserted as shown. A line contact **339** is formed between surfaces of the valve body **333** and the valve **336** so as to both hold the valve **336** within the cavity that is formed by the valve body **333** and to form a seal between the valve body **333** and the valve **336** to prevent water leakage. As seen, the valve **336** is integrated with the handle **219***a* in a single piece construction, although multiple piece construction may be employed.

With reference to FIGS. **9***a* and **9***b*, shown is a second embodiment of the bowl fill valve **203**, denoted herein as bowl fill valve **203***b* according to an embodiment of the present invention. The bowl fill valve **203***b* includes a valve body **343** within which is inserted a valve **346**. The bowl fill valve **203***b* further comprises the bowl fill valve outlet port **216***b* and a bowl fill valve inlet port (not shown). The bowl fill valve outlet port **216***b* includes a nipple **223***b*. The bowl fill valve **203***b* further includes a handle **209***b* for manual adjustment of the bowl fill valve **203***b*.

Referring next to FIG. **9***b*, shown is a cutaway view of the bowl fill valve **203***b* according to an embodiment of the present invention. As shown, the valve **346** is inserted into the valve body **343**. A snap fit **349** affixes the valve **346** within the valve body **343**. A seal is formed by virtue of an interference fit **353** between a surface of the valve **346** and an inner surface of the valve body **343**. The bottom of the cavity within the valve **346** is closed by a cap **356** that may be spin welded onto the valve **346** after the valve is inserted into the valve body **343**.

In addition, referring back to FIG. **4**, other types of couplings may be employed between the bowl fill outlet port **206** the bowl fill valve inlet port **213**. For example, the bowl fill outlet port **206** the bowl fill valve inlet port **213** may be configured to facilitate a compression fitting there between. Also, other snap fit and sealing configurations may be employed beyond those specifically described herein.

Although the invention is shown and described with respect to certain embodiments, it is obvious that equivalents and modifications will occur to others skilled in the art upon the reading and understanding of the specification. The present invention includes all such equivalents and modifications, and is limited only by the scope of the claims.

What is claimed is:

1. A toilet fill valve, comprising:

a water inlet;

a first water outlet configured to supply water to a toilet tank;

a bowl fill outlet port radially extending from a portion of a body of the toilet fill valve, the bowl fill outlet port being operatively coupled to the water inlet, and the bowl fill outlet port comprising an integrally molded portion of the body of the toilet fill valve;

a bowl fill valve having a bowl fill valve inlet port and a bowl fill valve outlet port, wherein the bowl fill valve inlet port is compatible with the bowl fill outlet port and the bowl fill valve inlet port being directly coupled to the bowl fill outlet port and establishing direct contact between the bowl fill outlet port and the bowl fill valve inlet port, wherein the bowl fill valve inlet port and the bowl fill valve outlet port each comprise an integrally molded portion of the bowl fill valve;

the bowl fill valve being configured to supply an adjustable flow of water out the bowl fill valve outlet port for filling a toilet bowl during a flush cycle of a toilet;

the bowl fill outlet port further comprising a first thread;

the bowl fill valve inlet port further comprising a second thread, the first thread being compatible with the second thread, and the first thread being engaged with the second thread and affixing the bowl fill valve inlet port to the bowl fill outlet port; and

a sealing ring clamped between a portion of the bowl fill outlet port and a portion of the bowl fill valve inlet port to form a seal between the bowl fill outlet port and the bowl fill valve inlet port.

2. The toilet fill valve of claim **1**, wherein bowl fill valve extends beyond the bowl fill outlet port in a radial direction with respect to a portion of the body of the toilet fill valve.

3. The toilet fill valve of claim **1**, wherein:

the bowl fill outlet port further comprises a female receptacle; and the bowl fill valve inlet port further comprises a male end.

4. The toilet fill valve of claim **1**, wherein:

the bowl fill valve inlet port further comprises a female receptacle; and

the bowl fill outlet port further comprises a male end.

5. The toilet fill valve of claim **1**, further comprising:

a float;

an actuating arm coupled to the float, the actuating arm radially extending in an orthogonal direction relative to a longitudinal axis of the toilet fill valve; and

the bowl fill valve extending in an orthogonal direction relative to the longitudinal axis of the toilet fill valve, wherein the actuating arm is angularly offset relative to the bowl fill valve, thereby preventing an interference with the bowl fill valve and a translational stem extending from the float to a free end of the actuating arm.

6. The toilet fill valve of claim **1**, wherein the bowl fill valve outlet port further comprises a nipple adapted to mate with an end of a tube.

7. The toilet fill valve of claim **1**, wherein the bowl fill valve further comprises a number of biased positions.

8. A toilet with a toilet tank having an adjustable bowl fill water flow, comprising:

a toilet fill valve in the toilet tank, the toilet valve having a water inlet coupled to a water source outside of the toilet tank and a water outlet directing a flow of water into the toilet tank;

a bowl fill outlet port radially extending from a portion of a body of the toilet fill valve, the bowl fill outlet port being operatively coupled to the water inlet and the bowl fill outlet port comprising an integrally molded portion of the body of the toilet fill valve;

a bowl fill valve having a bowl fill valve inlet port and a bowl fill valve outlet port, wherein the bowl fill valve inlet port is compatible with the bowl fill outlet port and the bowl fill valve inlet port being directly coupled to the bowl fill outlet port and establishing direct contact between the bowl fill outlet port and the bowl fill valve inlet port, wherein the bowl fill valve inlet port and the bowl fill valve outlet port each comprise an integrally molded portion of the bowl fill valve;

a tube having a first end attached to the bowl fill valve outlet port and a second end directed into an overflow tube in the toilet tank, wherein a flow of water into the overflow tube is directed to a toilet bowl of the toilet;

the bowl fill valve being configured to supply an adjustable flow of water out the bowl fill valve outlet port through the tube and into the overflow tube for filling the toilet bowl during a flush cycle of a toilet;

the bowl fill outlet port further comprising a first thread;

the bowl fill valve inlet port further comprising a second thread, the first thread being compatible with the second thread, and the first thread being engaged with the second thread and affixing the bowl fill valve inlet port to the bowl fill outlet port; and

a sealing ring clamped between a portion of the bowl fill outlet port and a portion of the bowl fill valve inlet port to form a seal between the bowl fill outlet port and the bowl fill valve inlet port.

9. A method for providing an adjustable bowl fill water flow in a toilet fill valve, comprising the steps of:

operatively coupling a bowl fill outlet port to a water inlet of the toilet fill valve;

radially extending the bowl fill outlet port from a portion of a body of the toilet fill valve; and

coupling a bowl fill valve inlet port of a bowl fill valve directly to the bowl fill outlet port by mating a first thread associated with the bowl fill outlet port with a second thread associated with the bowl fill valve inlet port, wherein the bowl fill valve inlet port is affixed to the bowl fill outlet port via the first and second threads, the bowl fill valve inlet port being compatible with the bowl fill outlet port, and the bowl fill valve being configured to provide for the adjustable bowl fill water flow out a bowl fill valve outlet port of the bowl fill valve for filling a toilet bowl during a flush cycle of a toilet; and

clamping a sealing ring between a portion of the bowl fill valve inlet port and a portion of the bowl fill outlet port.

10. The method of claim **9**, wherein the bowl fill outlet port comprises an integrally molded portion of the body of the toilet fill valve.

* * * * *