UNITED STATES PATENT AND TRADEMARK OFFICE

BEFORE THE PATENT TRIAL AND APPEAL BOARD

FLUIDMASTER, INC.

Petitioner

v.

DANCO, INC.
Patent Owner

Case No. IPR2024-00634
U.S. Patent No. 9,103,105 B1

PETITIONER FLUIDMASTER, INC.'S NOTICE OF APPEAL

By electronic filing
Patent Trial and Appeal Board
U.S. Patent & Trademark Office
P.O. Box 1450
Alexandria, VA 22313-1450

By electronic mail
Director of the U.S. Patent & Trademark Office
c/o Office of the General Counsel
U.S. Patent & Trademark Office
P.O. Box 1450
Alexandria, VA 22313-1450

By electronic filing
Circuit Executive and Clerk of Court
United States Court of Appeals for the Federal Circuit
717 Madison Place, NW
Washington, DC 20439

Pursuant to 35 U.S.C. §§ 141(c), 142 and 319; 37 C.F.R. §§ 90.2(a), 90.3(a), and 90.3(b)(1); Federal Rule of Appellate Procedure 15; and Federal Circuit Rule 15, Petitioner Fluidmaster, Inc. ("Petitioner") hereby appeals to the United States Court of Appeals for the Federal Circuit from the Decision Denying Petitioner's Request for Rehearing of Final Written Decision entered by the Patent Trial and Appeal Board ("the Board") on April 20, 2026, Paper No. 51 ("the Rehearing Request Decision," attached as Exhibit 1), and the Final Written Decision entered by the Board on March 5, 2026, Paper No. 47 (the "FWD," attached as Exhibit 2), and from all underlying findings, determinations, rulings, opinions, orders, issues, and decisions regarding the *inter partes* review of U.S. Patent No. 9,103,105 ("the '105 Patent") in IPR2024-00634.

In accordance with 37 C.F.R. § 90.2(a)(3)(ii), Petitioner identifies that the issues on appeal include, but are not limited to, whether the Board erred in determining that Petitioners had not shown by a preponderance of the evidence: (1) claims 1-24 of the '105 Patent to be unpatentable as anticipated under 35 U.S.C. § 102; and (2) claims 2, 4, 5, 6, 7, 14, 17, and 18 of the '105 Patent to be unpatentable as obvious under 35 U.S.C. § 103, as well as any and all findings or determinations supporting or related to the Board's findings, determinations, judgments or orders related to the foregoing issues, as well as all other issues decided adversely to Petitioner, including, without limitation, the Board's construction and application of

the claim language, the Board's interpretation of the prior art and applicable priority dates, the Board's interpretation of expert evidence, and the Board's application of the law.

The Board issued its Rehearing Request Decision on April 20, 2026. This notice is therefore timely filed within sixty-three (63) days of the Board's decision, as prescribed by 35 U.S.C. § 142 and 37 C.F.R. §§ 90.3(a)(1) and 90.3(b)(1).

Simultaneous with this filing and in accordance with 37 C.F.R. § 90.2(a)(1), Petitioner is concurrently filing this Notice of Appeal with the Director of the United States Patent and Trademark Office and the Clerk of the United States Court of Appeals for the Federal Circuit, along with the required fees, and is serving the same upon the Patent Owner in accordance with 37 C.F.R. § 1.248.

Dated: June 18, 2026

Respectfully submitted,

By: */ Carolyn S. Toto /*
Carolyn S. Toto (Reg No. 58,617)
Evan Finkel (Reg. No. 49,059)
Ranjini Acharya (*pro hac vice*)

PILLSBURY WINTHROP SHAW PITTMAN LLP
725 South Figueroa Street, 36th Floor
Los Angeles, CA 90017-5406
Telephone: (213) 488-7238
Facsimile: (213) 629-1033
carolyn.toto@pillsburylaw.com
evan.finkel@pillsburylaw.com
ranjini.acharya@pillsburylaw.com

Counsel for Petitioner Fluidmaster, Inc.

CERTIFICATE OF SERVICE

I hereby certify that on this 18th day of June, 2026, the foregoing **PETITIONER FLUIDMASTER, INC.'S NOTICE OF APPEAL** was filed and served electronically with the Patent Trial and Appeal Board, through the PTAB's electronic P-TACTS system.

I also certify that on this 18th day of June, 2026, the foregoing **PETITIONER FLUIDMASTER, INC.'S NOTICE OF APPEAL** was filed and served with the Director of the United States Patent and Trademark Office, via email to the Office of the General Counsel at efileSO@uspto.gov.

I also certify that on this 18th day of June, 2026, the foregoing **PETITIONER FLUIDMASTER, INC.'S NOTICE OF APPEAL** and the filing fee, were filed with the Clerk's Office of the United States Court of Appeals for the Federal Circuit, via the Court's CM/ECF system.

I also certify that on this 18th day of June, 2026, the foregoing **PETITIONER FLUIDMASTER, INC.'S NOTICE OF APPEAL** and all exhibits thereto was served on the counsel of record for the Patent Owner via electronic mail to the following addresses pursuant to 37 C.F.R. § 42.6(e):

- Jason M. Perilla (Lead Counsel): j.perilla@pkhip.com
- Kenneth A. Knox (Backup Counsel): k.knox@pkhip.com
- Eric G. Maurer (Backup Counsel): e.maurer@pkhip.com
- Thomas F. Finch: t.finch@pkhip.com

Dated: June 18, 2026

By: */ Carolyn S. Toto /*
Carolyn S. Toto (Reg No. 58,617)

Counsel for Petitioner Fluidmaster, Inc.

Exhibit 1

Trials@uspto.gov
571-272-7822

Paper 51
Date: April 20, 2026

UNITED STATES PATENT AND TRADEMARK OFFICE

BEFORE THE PATENT TRIAL AND APPEAL BOARD

FLUIDMASTER, INC.,
Petitioner,

v.

DANCO, INC.,
Patent Owner.

IPR2024–00634
Patent 9,103,105 B2

Before MEREDITH C. PETRAVICK, JAMES A. TARTAL, and ROBERT J. SILVERMAN, *Administrative Patent Judges.*

PETRAVICK, *Administrative Patent Judge.*

DECISION
Denying Petitioner's Request for Rehearing of Final Written Decision
37 C.F.R. § 42.71(d)(2)

INTRODUCTION

Fluidmaster, Inc. ("Petitioner") filed a Request for Rehearing (Paper 48, "Req. Reh'g") of the Final Written Decision (Paper 47, "Dec."). In particular, Petitioner requests reconsideration of our determination that

Petitioner failed to show by a preponderance of the evidence that claims 1–24 were anticipated by Schuster (Ex. 1029).

For the reasons discussed below, Petitioner's request for rehearing is *denied*.

STANDARD

When rehearing a decision, the Board reviews the decision for an abuse of discretion. 37 C.F.R. § 42.71(c). An abuse of discretion may arise if the decision is based on an erroneous interpretation of law, if a factual finding is not supported by substantial evidence, or if an unreasonable judgment is made in weighing relevant factors. *Star Fruits S.N.C. v. United States*, 393 F.3d 1277, 1281 (Fed. Cir. 2005); *Arnold P'ship v. Dudas*, 362 F.3d 1338, 1340 (Fed. Cir. 2004); *In re Gartside*, 203 F.3d 1305, 1315–16 (Fed. Cir. 2000).

The burdens and requirements of a request for rehearing are stated in 37 C.F.R. § 42.71(d):

> The burden of showing a decision should be modified lies with the party challenging the decision. The request must specifically identify all matters the party believes the Board misapprehended or overlooked, and the place where each matter was previously addressed in a motion, an opposition, or a reply.

A request for rehearing is not an opportunity to present new arguments or evidence or merely to disagree with the panel's assessment of the arguments or weighing of the evidence. Mere disagreement with the Board's conclusion is not a proper basis for rehearing. It is not an abuse of discretion to have made a conclusion with which a party disagrees.

DISCUSSION

In our Decision, we determined that Petitioner had not sufficiently shown that Schuster was available as prior art because U.S. Patent No. 9,103,105 B2 ("the '105 patent") was not entitled to claim priority to earlier filing dates of the parent applications, and in particular, to the March 11, 2004 filing date of Application No. 10/798,606 ("the '606 application"). Dec. 40–44. We found that, contrary to Petitioner's contentions (Pet. 91–92), the '606 application provided sufficient written description support for the claimed "bowl fill restriction." *Id.* In making our finding, we found persuasive the testimony of Patent Owner's declarant Mr. Jobin as to what one of ordinary skill in the art would have known from the '606 application's disclosure of appropriate devices for regulating water flow. *Id.* at 40–44.

Petitioner contends that we misapprehended or overlooked its evidence that the '606 patent lacks sufficient written description support. *See generally*, Req. Reh'g. Petitioner argues that we should have given more weight to its evidence and the testimony of its declarant Dr. Cameron and less weight to Patent Owner's evidence and the testimony of Mr. Jobin. *Id.* To show that Petitioner's evidence should have been afforded greater weight, Petitioner raises new arguments challenging Patent Owner's evidence and Mr. Jobin's testimony which could have been, but were not, made in Petitioner's Reply. *Compare e.g.,* Req. Reh'g 1–14 to Paper 32, 24–25.

A request for rehearing is not an opportunity to present new arguments or evidence or merely to disagree with the panel's assessment of the arguments or weighing of the evidence. We could not have overlooked

or misapprehended arguments and evidence that was not adequately presented during trial.

In any event, we have considered Petitioner's arguments in the Request and are not persuaded to modify our Decision. For the reasons set forth in our Decision, which we will not repeat here, Petitioner fails to persuade us that the claims of the '105 patent are not entitled to priority to the March 11, 2004, filing date of the '606 application. *See* Dec. 40–44.

CONCLUSION

For the foregoing reasons, Petitioner's Request for Rehearing is *denied*. In summary:

Outcome of Decision on Rehearing:

Claim(s)	**35 U.S.C §**	**Reference(s)/Basis**	**Denied**	**Granted**
1–24	102	Schuster	1–24	
Overall Outcome			1–24	

Final Outcome after Rehearing:

Claim(s)	35 U.S.C. §	Reference(s)/Basis	Claim(s) Shown Unpatentable	Claim(s) Not Shown Unpatentable
1–3, 6, 8–15, 20–24	103	Guoxin and Ho		1–3, 6, 8–15, 20–24
4, 5, 7, 16–19	103	Guoxin, Ho, and Quick Connection Art		4, 5, 7, 16–19
1–3, 6, 8–15, 20–24	103	Brown and Ho	1, 3, 8–13, 15, 20–24	2, 6, 14
4, 5, 7, 16–19	103	Brown, Ho, and Quick Connection Art	16, 19	4, 5, 7, 17, 18
1–24	102	Schuster		1–24
Overall Outcome			1, 3, 8–13, 15, 16, 19–24	2, 4–7, 14, 17, 18

ORDER

Accordingly, it is:

ORDERED that Petitioner's Request for Rehearing is *denied*.

PETITIONER:

Carolyn Toto
Evan Finkel
PILLSBURY WINTHROP SHAW PITTMAN LLP
carolyn.toto@pillsburylaw.com
evan.finkel@pillsburylaw.com

PATENT OWNER:

Jason Perilla
Kenneth Knox
Eric G. Maurer
Thomas Finch
PERILLA KNOX & HILDEBRANDT LLP
j.perilla@pkhip.com
k.knox@pkhip.com
e.maurer@pkhip.com
t.finch@pkhip.com

Exhibit 2

Trials@uspto.gov
571-272-7822

Paper 47
Date: March 5, 2026

UNITED STATES PATENT AND TRADEMARK OFFICE

BEFORE THE PATENT TRIAL AND APPEAL BOARD

FLUIDMASTER, INC.,
Petitioner,

v.

DANCO, INC.,
Patent Owner.

IPR2024-00634
Patent 9,103,105 B2

Before MEREDITH C. PETRAVICK, JAMES A. TARTAL, and ROBERT J. SILVERMAN, *Administrative Patent Judges.*

PETRAVICK, *Administrative Patent Judge*.

JUDGMENT
Final Written Decision
Determining Some Challenged Claims Unpatentable
35 U.S.C. § 318(a)

I. INTRODUCTION

Fluidmaster, Inc. ("Petitioner") filed a Petition requesting *inter partes* review of claims 1–24 of U.S. Patent No. 9,103,105 B2 (Ex. 1001, "the '105

patent"). Paper 1 ("Pet."). On September 9, 2024, we instituted this *inter partes* review as to all challenged claims and all grounds presented in the Petition (Paper 21).

After institution, Patent Owner filed a Patent Owner's Response. Paper 28 ("PO. Resp."). Petitioner filed a Reply (Paper 32, "Pet. Reply"), and Patent Owner filed a Sur-reply (Paper 38, "PO Sur-reply"). An oral hearing was held on June 10, 2025, and a transcript appears in the record. (Paper 43).

The Acting Chief Administrative Patent Judge extended the one-year period for issuing a final written decision under 35 U.S.C. § 316(a)(11). *See* Papers 45, 46.

We have jurisdiction under 35 U.S.C. § 6. This is a Final Written Decision under 35 U.S.C. § 318(a) as to the patentability of claims 1–24 of the '105 patent. For the reasons discussed below, we determine Petitioner establishes by a preponderance of the evidence that 1, 3, 8–13, 15, 16, and 19–24 are unpatentable, but has failed to establish by a preponderance of the evidence that claims 2, 4–7, 14, 17, and 18 are unpatentable.

A. Real Parties-in-Interest

Petitioner identifies Fluidmaster, Inc. as the real party-in-interest. Pet. 24. Patent Owner identifies Danco, Inc., Hardware Holding, Inc., PPG, Inc., and NCH Corporation as the real parties-in-interest. Paper 4, 1.

B. Related Matters

The parties identify *Danco, Inc. v. Fluidmaster, Inc. et al*, Civil Action No. 8:23-cv-01156-AB-DFM in the Central District of California ("the related litigation") as a related proceeding. Pet. 34; Paper 4, 1.

Patent Owner also identifies the following related *inter partes* reviews: IPR2024-00633 and IPR2024-00635. Paper 4, 1; *see also* Pet. 3–4 (discussing two additionally filed petitions).

C. The '105 Patent

The '105 patent is titled "Toilet Fill Valve" and issued from a U.S. patent application filed on August 12, 2014. Ex. 1001, code (22), (54). On its face, the '105 patent claims priority to an application filed on March 11, 2004, which issued as U.S. Pat. No. 6,823,889. *Id.* at code (63).

Figure 4 of the '105 patent is reproduced below, with some labels added.

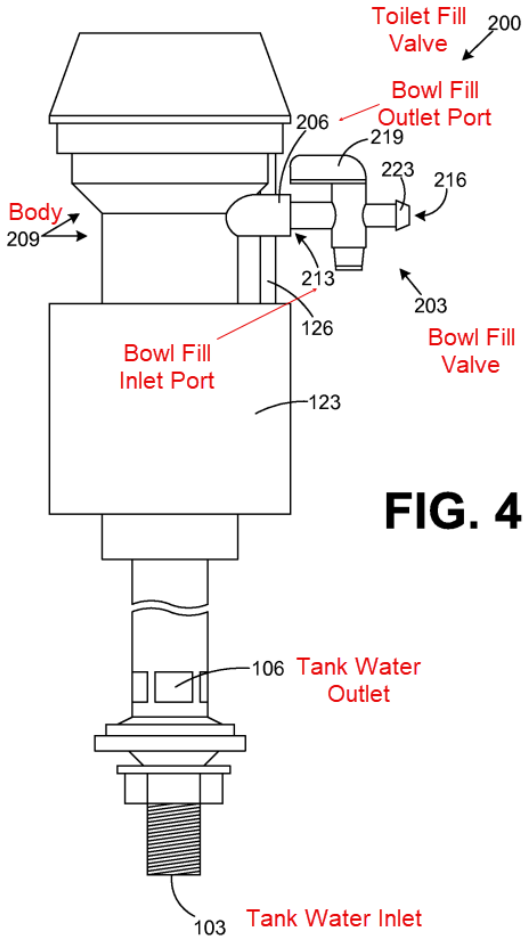

FIG. 4

Figure 4 depicts an embodiment of the toilet fill valve. *Id.* at 1:45–46, 5:1–2. Toilet fill valve 200 includes body 209, having tank water inlet 103 and tank water outlet 106. *Id.* at 5:3–4.

Toilet fill valve 200 also has bowl fill outlet port 206 that radially extends from body 209. *Id.* at 5:15–17. The '105 patent explains:

> The toilet fill valve 200 provides an advantage in that the body 209 of the toilet fill valve 200 may be constructed with the bowl fill outlet port 206 using a molding process that is much less complex than attempting to mold the entire bowl fill valve 203 within the structure of the body 209 as a single molded construction as was described with reference to one embodiment of the toilet fill valve 100. In this regard, the bowl fill valve 203 may be constructed as a separate component to the body 209 of the toilet fill valve 200 and assembled for distribution to end users.

Id. at 6:10–20; *see also id.* at 2:23–26 (describing that bowl fill valve 109 can be molded as a portion of toilet fill valve 100 or "snapped or clamped into place"), *id.* at 5:9–14.

Bowl fill valve 203 includes bowl fill valve inlet port 213 that couples to bowl fill outlet port 206. *Id.* at 5:14–13. Bowl fill valve 203 also includes a handle for adjusting the flow of water to the toilet bowl, bowl fill valve outlet port 215, and nipple 223 that mates with tube 146 extending from overfill tube 149. *Id.* at 5:27–30, 5:38–43.

After the toilet is flushed, toilet fill valve 200 opens to allow water to flow from water inlet 103 to water outlets 106 into the toilet tank. *Id.* at 3:10–14. At the same time, water flows to bowl fill valve 209 and tube 146 directs the water flowing out bowl fill valve 209 to an overflow tube in the tank so as to refill the bowl. *Id.* at 3:14–23.

Bowl fill valve 203's handle is set to "ensure that the water level in the toilet bowl reaches the full level at about the same time that the flush

cycle ends. . . . This prevents any water from being lost down the drain associated with the toilet." *Id.* at 4:30–36.

D. Illustrative Claims

Petitioner challenges claims 1–24 of the '105 patent. Claims 1, 9, 15, and 24 are independent. Claims 2–8 and 21 depend directly or indirectly from claim 1. Claims 10–14 depend directly or indirectly from claim 9. Claims 16–23 depend directly or indirectly from claim 15.

Claim 1 is illustrative and reproduced below with limitation labels added.

1. [1 Pre] A system, comprising:

[1A] a toilet fill valve that comprises:

[1B] a body comprising an extended portion, wherein the extended portion is integrally molded with the body, wherein the extended portion forms a bowl fill outlet port;

[1C] a water inlet configured to receive water from a water source; and a tank water outlet configured to provide a first portion of the water to a toilet tank during at least a portion of a flush cycle:

[1D1] a bowl fill restriction configured to attach directly to the extended portion of the body, [1D2] wherein the bowl fill restriction comprises a protrusion that is configured to insert into a recess in the toilet fill valve to lock the bowl fill restriction to the extended portion of the body, [1D3] wherein the bowl fill restriction is configured to receive a second portion of the water from the bowl fill outlet port during at least a portion of the flush cycle, [1D4] wherein the restriction is configured to constrict a flow rate of the second portion of the water that flows through the bowl fill restriction; and

[1E] a tube that is configured to attach directly to the bowl fill restriction, wherein the tube is configured to direct the

> second portion of the water from the bowl fill restriction directly to a toilet tank overflow tube.

Ex. 1001, 9:62–10:20.

These limitation labels are the same as those provided in the Petition. Pet. xi. The Petition also provides limitation labels for independent claims 9, 15, and 24. *Id.* at xii–xv. We refer to these limitation labels in our analysis.

E. Asserted Grounds

Petitioner asserts that claims 1–24 would have been unpatentable on the following grounds:

Ground	Claim(s) Challenged	35 U.S.C. §	Basis
1	1–3, 6, 8–15, 20–24	103	Guoxin,[1] Ho[2]
2	4, 5, 7, 16–19	103	Guoxin, Ho, "Quick Connection Art"
3	1–3, 6, 8–15, 20–24	103	Brown,[3] Ho
4	4, 5, 7, 16–19	103	Brown, Ho, "Quick Connection Art"
5	1–24	103	Schuster[4]

"Quick Connection Art" refers to Bjerke[5], Calmettes[6], Hall[7], and Kimber[8], collectively. Pet. 8.

---

[1] Registered Utility Model Publication Number CN2447417Y, published Sept. 12, 2001 (Ex. 1015). A certified English language translation is at Exhibit 1016.
[2] U.S. Patent No. 5,862,538, issued Jan. 26, 1999 (Ex. 1022).
[3] U.S. Patent No. 3,086,546, issued Apr. 23, 1963 (Ex. 1021).
[4] U.S. Patent No. 8,104,105 B1, issued Jan. 31, 2012 (Ex. 1029).
[5] U.S. Patent No. 5,926,868, issued July 27, 1999 (Ex. 1017).
[6] U.S. Patent No. 5,249,830, issued Oct. 5, 1993 (Ex. 1018).
[7] U.S. Patent No. 989,251, issued Apr. 11, 1911 (Ex. 1019).
[8] Canadian Patent No. 1,320,235, published July 13, 1993 (Ex. 1020).

Petitioner relies on the Declaration of Dr. Kimberly Cameron. Ex. 1004. Patent Owner relies on the Declaration of Michael Jobin. Ex. 2013.

II. ANALYSIS

A. Legal Standards

"In an IPR, the petitioner has the burden from the onset to show with particularity why the patent it challenges is unpatentable." *Harmonic Inc. v. Avid Tech., Inc.*, 815 F.3d, 1356, 1363 (Fed. Cir. 2016) (citing 35 U.S.C. § 312(a)(3) (requiring *inter partes* review petitions to identify "with particularity . . . the evidence that supports the grounds for the challenge to each claim")); *Dynamic Drinkware, LLC v. Nat'l Graphics, Inc.*, 800 F.3d 1375, 1378 (Fed. Cir. 2015) (discussing the burden of proof in inter partes review). Although we may indicate in this Decision that certain Patent Owner arguments are not persuasive, in doing so we do not shift the ultimate burden from Petitioner.

A claim is unpatentable under § 103(a) if the differences between the claimed subject matter and the prior art are such that the subject matter, as a whole, would have been obvious at the time the invention was made to a person having ordinary skill in the art to which said subject matter pertains. *KSR Int'l Co. v. Teleflex Inc.*, 550 U.S. 398, 406 (2007). The question of obviousness is resolved on the basis of underlying factual determinations, including: (1) the scope and content of the prior art; (2) any differences between the claimed subject matter and the prior art; (3) the level of skill in the art; and (4) when in evidence, objective indicia of non-obviousness

(i.e., secondary considerations).[9] *Graham v. John Deere Co.*, 383 U.S. 1, 17–18 (1966).

The Supreme Court explained in *KSR International Co. v. Teleflex Inc.* that:

> Often, it will be necessary for a court to look to interrelated teachings of multiple patents; the effects of demands known to the design community or present in the marketplace; and the background knowledge possessed by a person having ordinary skill in the art, all in order to determine whether there was an apparent reason to combine the known elements in the fashion claimed by the patent at issue.

550 U.S. at 418 (citing *In re Kahn*, 441 F.3d 977, 988 (Fed. Cir. 2006) ("[R]ejections on obviousness grounds cannot be sustained by mere conclusory statements; instead, there must be some articulated reasoning with some rational underpinning to support the legal conclusion of obviousness." (alteration in original)). A petitioner cannot prove obviousness with "mere conclusory statements." *In re Magnum Oil Tools Int'l, Ltd.*, 829 F.3d 1364, 1380 (Fed. Cir. 2016). Rather, a petitioner must articulate a sufficient reason why a person of ordinary skill in the art would have combined the prior art references. *In re Nuvasive, Inc.*, 842 F.3d 1376, 1382 (Fed. Cir. 2016).

"Whether an ordinarily skilled artisan would have been motivated to modify the teachings of a reference is a question of fact." *WBIP, LLC v. Kohler Co.*, 829 F.3d 1317, 1327 (Fed. Cir. 2016). "[W]here a party argues a skilled artisan would have been motivated to combine references, it must show the artisan 'would have had a reasonable expectation of success from

[9] No evidence of secondary considerations has been presented at this stage of the proceeding.

doing so.'" *Arctic Cat Inc. v. Bombardier Recreational Prods. Inc.*, 876 F.3d 1350, 1360–61 (Fed. Cir. 2017) (quoting *In re Cyclobenzaprine Hydrochloride Extended-Release Capsule Patent Litig.*, 676 F.3d 1063, 1068–69 (Fed. Cir. 2012)).

B. Level of Ordinary Skill in the Art

In order to determine whether an invention would have been obvious at the time the application was filed, we consider the level of ordinary skill in the pertinent art at critical time. *Graham*, 383 U.S. at 17. The resolution of this question is important because it allows us to "maintain[] objectivity in the obviousness inquiry." *Ryko Mfg. Co. v. Nu-Star, Inc.*, 950 F.2d 714, 718 (Fed. Cir. 1991). In assessing the level of ordinary skill in the art, various factors may be considered, including the "type of problems encountered in the art; prior art solutions to those problems; rapidity with which innovations are made; sophistication of the technology; and educational level of active workers in the field." *In re GPAC, Inc.*, 57 F.3d 1573, 1579 (Fed. Cir. 1995) (quoting *Custom Accessories, Inc. v. Jeffrey-Allan Indus., Inc.*, 807 F.2d 955, 962–63 (Fed. Cir. 1986)). Generally, it is easier to establish obviousness under a higher level of ordinary skill in the art. *Innovention Toys, LLC v. MGA Entm't, Inc.*, 637 F.3d 1314, 1323 (Fed. Cir. 2011) ("A less sophisticated level of skill generally favors a determination of nonobviousness . . . while a higher level of skill favors the reverse.").

Patent Owner proposes that:

> A [person of ordinary skill in the art ("POSITA")] in the field to which the '105 Patent is directed would have had at least a Bachelor of Science degree in mechanical engineering or a related field or, as a substitute, at least two years of work or

> research experience in the design or development of toilet products, parts, and accessories.

PO Resp. 5.

Petitioner's declarant Dr. Cameron asserts that:

> A [POSITA] with respect to the subject matter of the '105 patent at the time of the priority date, January 27, 2014, would have had an undergraduate degree in mechanical engineering, or other technical training in product design or equivalent work experience. This person would also possess at least one year of experience in developing and/or evaluating mechanical aspects of fluid systems.

Ex. 1004 ¶ 29.

We adopt Patent Owner's proposed definition of a POSITA, as it is consistent with the '105 patent and the asserted prior art. *See Okajima v. Bourdeau*, 261 F.3d 1350, 1355 (Fed. Cir. 2001). However, we see no material difference between the level of skill proposed by Patent Owner and that proposed by Dr. Cameron.

C. Claim Construction

In an *inter partes* review proceeding, a patent claim shall be construed using the same claim construction standard that would be used to construe the claim in a civil action under 35 U.S.C. § 282(b). 37 C.F.R. § 42.100(b) (as amended Oct. 11, 2018). Our rule adopts the same claim construction standard used by Article III federal courts, which follow *Phillips v. AWH Corp.*, 415 F.3d 1303 (Fed. Cir. 2005) (en banc), and its progeny.

Under this standard, the words of a claim are generally given their "ordinary and customary meaning," which is the meaning the term would have to a person of ordinary skill at the time of the invention. *See Phillips*,

415 F.3d at 1312–13. In construing claims in accordance with their ordinary and customary meaning, we take into account the specification and prosecution history. *Id.* at 1315–17.

1. "integrally molded with"

In our Institution Decision, we adopted Patent Owner's construction of "integrally molded with" as "molded together as a single structure." Paper 21, 15.

In its Response, Patent Owner argues that the term "molded" additionally requires a plastic structure. PO Resp. 22–23. Patent Owner states:

> In the context of toilet fill valves recited by the Challenged Claims, a POSITA would have understood the term "molded" to refer to plastic structures, which are manufactured through processes such as injection molding, over molding, or extrusion molding. EX2008, 35:10-39:12. EX2013, ¶132.
>
> "Molded" does not refer to metal structures, which are typically "cast" or "machined." EX2013, ¶ 133; EX2008, 63:21–65:21.

Id. Patent Owner, thus, would have us construe "integrally molded with" to mean molded together as a single plastic structure.

Patent Owner does not persuade us to alter our construction of "integrally molded with" to require a plastic, and not metal, structure. The term "plastic" is not recited by the claims and does not appear in the '105 patent's specification. *See generally* Ex. 1001. Patent Owner relies upon the testimony of Mr. Jobin for support. PO Resp. 22–23. But, Mr. Jobin's testimony is conclusory and not sufficiently supported to show that a POSITA would have understood "molded" to refer to plastics. Ex. 2013 ¶¶ 132–133; *see Phillips,* 415 F.3d at 1318 (explaining that "conclusory,

unsupported assertions by experts as to the definition of a claim term are not useful to a court"). Mr. Jobin cites to cross-examination testimony of Dr. Cameron for support. *Id.* (citing Ex. 2008, 35:10–39:12, 63:21–65:21). Dr. Cameron's cited cross-examination testimony is a general discussion of different types of plastic molding, such as injection, over molding, and extrusion molding and metal casting, and does not specially address what a POSITA would have understood the term "molded" to require. *See* Ex. 2008, 35:10–39:12 (discussing generally various types of molding), *id.* at 63:21–65:21 (discussing generally differences in injection molding with plastic and casting metal). Dr. Cameron was not asked, in the context of cross-examination testimony, what a POSITA would have understood the term "molded" to require. *See generally,* Ex. 2008; *see also* Ex. 1036 ¶¶ 16–22 (Supplemental Declaration of Dr. Cameron). Contrary to Patent Owner's proposed construction, Dr. Cameron testifies: "I do not believe that 'molded' refers to a particular material composition in these claims." *Id.* ¶ 24.

We are not persuaded to alter our construction of "integrally molded with" to additionally require plastic. Consistent with our Institution Decision, we construe "integrally molded with" to mean molded together as a single structure. Paper 21, 15.

2. remaining terms

Except to the extent discussed in our patentability analysis below, we do not need to construe any other claim terms to reach our decision. *See Realtime Data LLC v. Iancu*, 912 F.3d 1368, 1375 (Fed. Cir. 2019) ("The Board is required to construe 'only those terms . . . that are in controversy,

and only to the extent necessary to resolve the controversy.'" (quoting *Vivid Techs., Inc. v. Am. Sci. & Eng'g, Inc.*, 200 F.3d 795, 803 (Fed. Cir. 1999))).

D. Ground 1 – Guoxin and Ho

Petitioner contends that claims 1–3, 6, 8–15, and 20–24 are unpatentable over Guoxin and Ho. Pet. 22–52.

1. Summary of Guoxin

Guoxin is a Chinese Utility Model Patent Specification titled "Toilet Water Tank Water Supply Switching Device" and published on September12, 2001. Ex. 2007[10], codes [12], [45], [54].

Guoxin's Figures 3–5 are reproduced below, side-by-side.

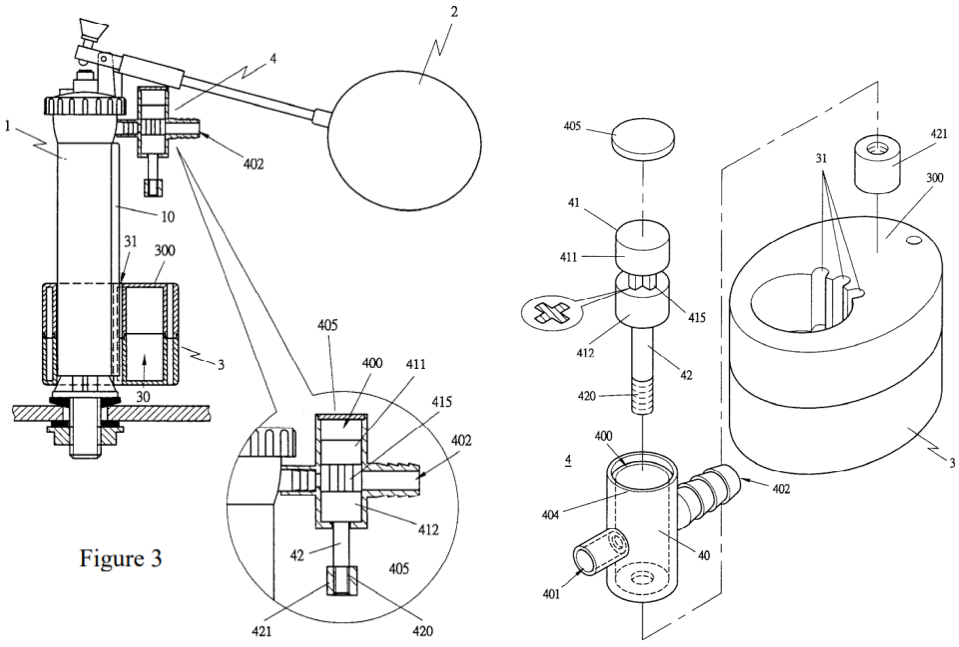

Figure 3

Figure 4

Figure 5

[10] For clarity, we cite to the page and line numbers Patent Owner added to Guoxin in Exhibit 2007. Except for page and line numbering, Exhibit 2007 is identical to Exhibit 1016.

Figure 3 shows the invention after flushing, and Figure 4 is an enlarged view of Figure 4, and Figure 5 is an exploded view. Ex. 2007, 5:7–9. Figures 3–5 depict switching mechanism 4. Guoxin discloses switching mechanism 4 as follows:

> The switching mechanism 4 is equipped with a valve seat 40. This valve seat 40 has a slot 400 to accommodate a switching valve 41. The valve seat 40 has water inlet and outlet 401 and 402, where the water outlet 402 can be connected to the water supply pipeline 403, and the water supply line 403 is directed to the toilet to directly provide water supply to the toilet. . . .
>
> The switching valve 41 is equipped with upper and lower annular surrounds 411 and 412, and between these two annular surrounds 411 and 412, there is a smaller annular surround 415, which the smaller annular surround 415 can be cross-shaped or another shape. This facilitates a state as shown in Figures 3 and 4, where the water inlet and outlet can be aligned in a straight line, allowing water to flow into the toilet. However, when the water in the toilet water tank gradually reaches a set level of height (as shown in Figure 2), the lower annular surround 412 will block between the water inlet and outlet 401 and 402, thus discontinuing the water supply to the toilet through this switching mechanism. Furthermore, the valve stem 42 is equipped with external threads 420, which are combined with a T-shaped nut 421. This T-shaped nut has an appropriate weight, such that when the water level in the water tank decreases, the weight of the nut will automatically lower the switching valve. By simply turning the T-shaped nut, the length of the valve stem can be altered, thus changing the position at which the switching valve's stem is driven by the secondary ball float.

Id. at 5:17–36.

2. Analysis of Independent Claims 1, 9, 15, and 24

Limitation 1E recites a tube that is "configured to direct the second portion of the water from the bowl fill restriction directly to a toilet tank

overflow tube." Ex. 1001, 10:17–20. Limitations 15C and 24E recite a similar limitation. *Id.* at 11:28–30, 12:36–39. Limitation 9D recites a step of "providing, via the bowl fill restriction, the second portion of the water to a tube that is in direct contact with the bowl fill restriction; and providing, via the tube, the second portion of the water to a toilet tank overfill tube." *Id.* at 10:63–67.

Petitioner maps Guoxin's water supply pipeline 403 to the "tube" of Limitations 1E, 9D, 15C, and 24E. Pet. 38–39 (citing Ex. 1016, 2:17–18, Fig. 2); Pet. Reply 3–6. Petitioner contends that a tube configured to attach directly to the bowl fill restriction to direct the second portion of water to a toilet tank overflow tube is conventional in the art Pet. 38 (citing Ex. 1004 ¶ 129); *see also* Pet. 13; Pet. Reply 3–6 (citing Ex. 1004 ¶¶ 83, 84, 86, 87, 307; Ex. 2008, 85:6–13; Ex. 2013 ¶ 110). Petitioner argues that a POSITA would understand Guoxin's line 403 is conventionally connected to an overfill tube, thereby satisfying Claim 1[E]. Pet. Reply 3 (citing Ex. 1036 ¶¶ 25–32).

Patent Owner argues that Petitioner fails to meet it burden to show that Guoxin's water supply pipeline 403 meets Limitations 1E, 9D, 15C, and 24D. PO Resp. 11–18; *see* PO Sur-reply 4–6. In particular, Patent Owner states: "Guoxin itself confirms that water supply line 403 is not directed to an overfill tube, but instead (1) 'is directed to the toilet' and (2) '*directly* provide[s] water supply to the toilet.'" PO Resp. 17 (citing Ex. 2007, 2:18–21).

Patent Owner's argument is persuasive.

In the Petition, Petitioner annotates Guoxin's Figure 2 to highlight water supply pipeline 403. Pet. 19. Annotated Figure 2 of Guoxin is reproduced below.

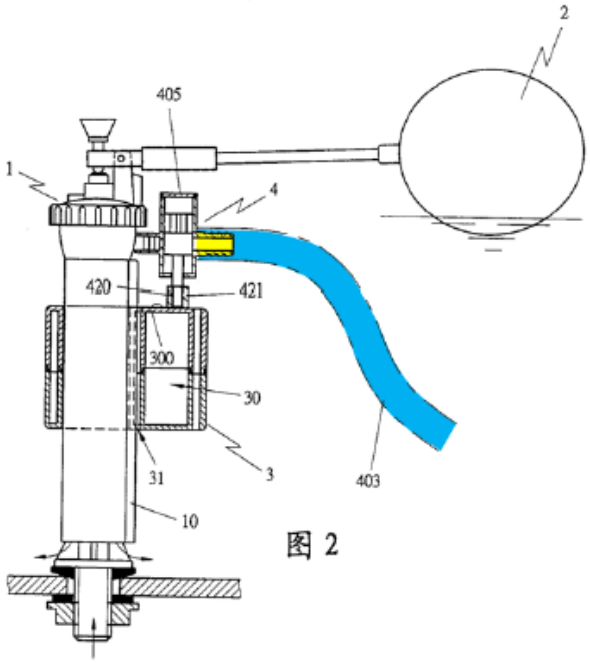

Annotated Figure 2 of Guoxin depicts "[a] view of the [toilet water tank water supply switching device] when the water level is full." Ex. 2007, 5:6. Annotated Figure 2 depicts switching device 4 having a valve seat 40 with water supply pipeline 403 (colored blue) attached to water outlet 402 (colored yellow) (element number not provided in Figure 2). *Id.* at 5:19–21. Annotated Figure 2, however, provides only a partial view of the toilet tank and water supply pipeline 403 and does not depict the end of water supply pipeline 403 or a toilet tank overfill tube Water supply pipeline 403 is pictured as descending into the toilet tank apparently below the water level.

Guoxin does not mention an overfill tube. *See generally* Ex. 2007. Guoxin describes that "each time a toilet is flushed, a portion of the water from the inlet device is directly supplied to the toilet bowl" (*Id.* at 4:5–7) and

describes water supply line 403 as being "directed to the toilet to directly provide water supply to the toilet" (*id.* at 5:19–23), but does not describe water supply line 403 as directing water directly to an overfill tube. Nor does Guoxin provide any other description of the structure of water supply line 403.

Petitioner contends that directing water from a bowl fill restriction to an overfill tube is conventional in the art. Pet. 38 (citing Ex. 1004 ¶ 159); *see also* Pet. Reply 3 (citing Ex. 1004 ¶¶ 81, 84, 85, 223; Ex. 2008, 85:6–13; Ex. 2013 ¶ 109. In its Reply, Petitioner asserts that a POSITA would understand Guoxin's line 403 is conventionally connected to an overfill tube, thereby satisfies Limitation 1[E]. Pet. Reply 3.

Although Petitioner's evidence may show that overfill tubes are a conventional means of directing a portion of water to the toilet bowl (*see, e.g.*, Ex. 1004 ¶ 159; Ex. 1036 ¶ 31; Ex. 1021, 4:20–22), neither Petitioner nor Dr. Cameron sufficiently explains why a POSITA would infer from Guoxin's teachings that Guoxin's water supply pipeline 403 operates conventionally to direct water to the toilet bowl through an overfill tube. Pet. Reply 3–4; Ex. 1036 ¶¶ 25–32. Nor does the Petitioner provide any sufficient analysis or evidence in the Petition as to why a POSITA would have been motivated to modify Guoxin water supply line 403 to operate in the allegedly conventional manner. *See generally* Pet.

In its Reply, Petitioner argues that claim 1 does not require an overflow tube because the Limitation 1E only requires a tube *configured to* attach directly to the water flow regulator and Guoxin's water supply pipeline 403 meets this *configured to* limitation. Pet. Reply 2. As Patent Owner points out (PO Sur-reply 2–3), Limitation 1E requires more than a tube configured to attach directly to a bowl fill restriction because Limitation

1E recites that the tube is configured to direct the second portion of the water from the bowl fill restriction directly to a toilet tank overflow tube.

Petitioner does not sufficiently explain how the structure of Guoxin's water supply pipeline 403 is configured to meet Limitations 1E, 15C, and 24D. Nor does Petitioner sufficiently explain how Guoxin's water supply pipeline 403 performs step 9D, which requires the tube to providing water to an overflow tube.

Petitioner has the burden to show that Guoxin teaches limitation 1E, 9D, 15C, and 24D. After reviewing Petitioner's evidence and analysis, we determine that Petitioner fails to meet that burden.

3. Conclusion as to Ground 1

Petitioner fails to meet its burden to show, by a preponderance of the evidence, that independent claims 1, 9, 15, and 24, and claims 2, 3, 6, 8, 10–14, and 20–23 which depend directly or indirectly from claims 1, 9, and 15, are unpatentable over Guoxin and Ho. *In re Fritch*, 972 F.2d 1260, 1266 (Fed. Cir. 1992) ("[D]ependent claims are nonobvious if the independent claims from which they depend are nonobvious.").

E. Ground 2 – Guoxin, Ho, and Quick Connection Art

Petitioner challenges claims 4, 5, 7, and 16–19 as being unpatentable over Guoxin, Ho, and Quick Connection Art. Pet. 52–59. Claims 4, 5, 7, and 16–19 depend directly or indirectly from claims 1 and 15. The addition of Quick Connection Art does not resolve the deficiencies with Guoxin and Ho discussed above with regard to Ground 1. Accordingly, for the same reasons discusses under Ground 1, Petitioner fails to meet its burden to show by a preponderance of the evidence that dependent claims 4, 5, 7, and 16–19

are unpatentable over Guoxin, Ho, and Quick Connection Art. *See Fritch*, 972 F.2d at 1266.

F. Ground 3 – Brown and Ho

Petitioner contends that claims 1–3, 6, 8–15, and 20–24 are unpatentable over Brown and Ho. Pet. 60–79.

1. Summary of Brown

Brown is a U.S. patent titled "Water Silencing and Saving Means for Ball Cock Valve Assembly In Toilet Flush Tank" and issued on April 23, 1963, from an application filed on March 6, 1959. Ex. 1021, 1.

Figure 1 of Brown is reproduced below.

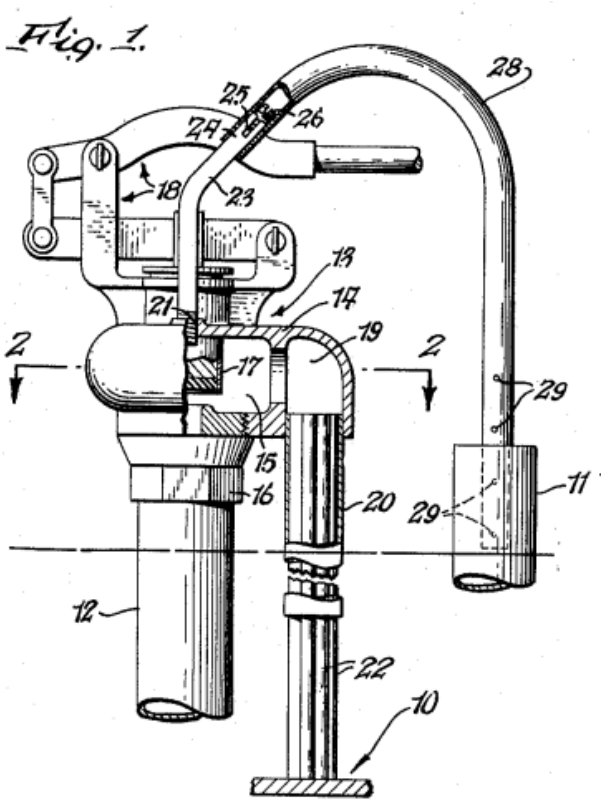

Figure 1 depicts a portion of the toilet flush tank, having a ball cock valve assembly. *Id.* at 2:25–31. Ball cock valve assembly 13 has main

chamber 15, auxiliary chamber 19, and opening 21. *Id.* at 2:53– 58. When the toilet refills after flushing, water flows into main chamber 15 from intake pipe 12 and to auxiliary chamber 19 to refill the tank through pipe 20. *Id.* at 2:69–3:4. Water also flows through adapter tube 23, which is attached by external threads to opening 21. *Id.* at 2:4–6. Adapter tube 23 is connected to overflow pipe 11 by tube 28. *Id.* at 3:57–64.

Figure 3 of Brown is reproduced below.

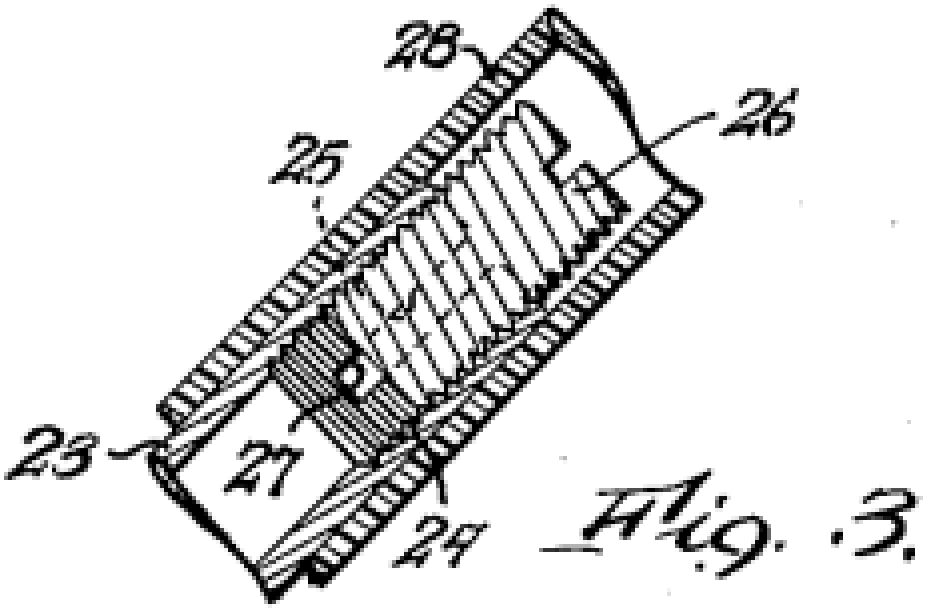

Figure 3 depicts the metering valve of Figure 1. *Id.* at 2:34–37. One end of adapter tube 23 has internally threaded portion 24 with a pair of diametrically opposed slots 25, and internally threaded portion 24 receives set screw 26. *Id.* at 3:45–51. "The slotted portion 24 of adapter tube 23 and the set screw 26 form an adjustable metering valve for confining the flow of water through the restricted opening 27 formed between the slots 25 of portion 24 and the end of set screw 26." *Id.* at 3:52–56.

2. Summary of Ho

Ho is a U.S. patent titled "Toilet Flushing Device" and issued of January 26, 1999, from an application filed on November 20, 1997. Ex. 1022, code [22], [45], [54].

Figure 3 of Ho is reproduced below.

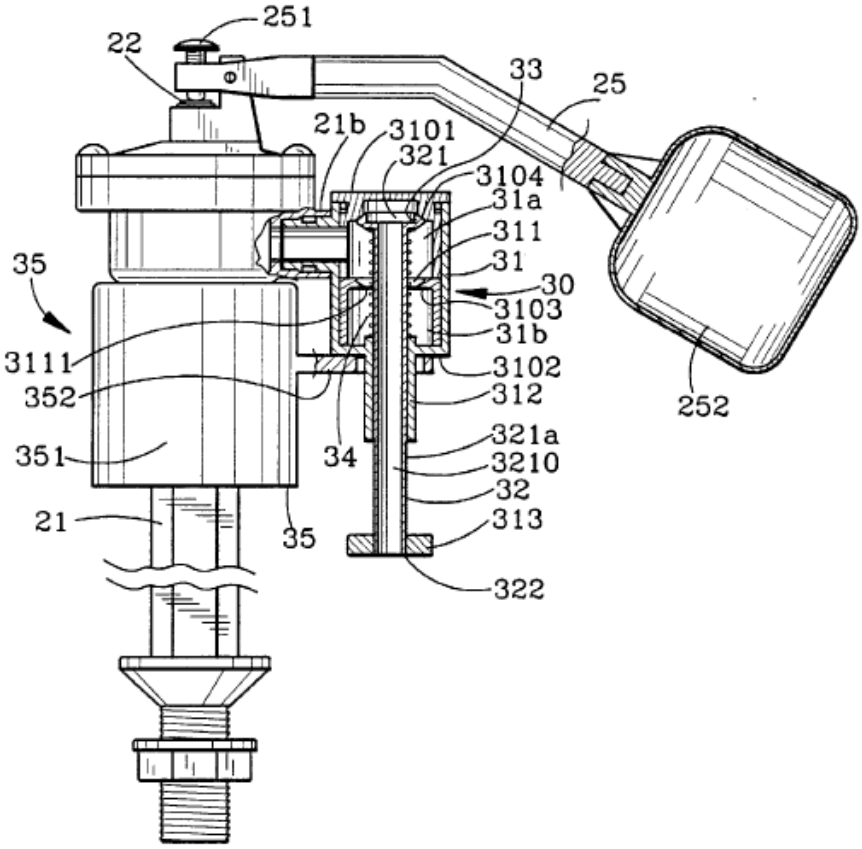

FIG.3

Figure 3 depicts a sectional view of Ho's toilet flushing device. *Id.* at 2:24–26. Water supply pipe 21 has a lower end connected to a water supply and an upper end with ball-cock valve 22. *Id.* at 2:56–61. Water supplying pipe 21 communicates fluidly with diverter valve means 30. *Id.* at

3:6–9. Ho states: "the diverter valve means 30 of the present invention includes a hollow valve housing 31, a transverse inlet pipe (21*b*) which receives water from the water supplying pipe 21, and a transverse supply line 40 connected to and supplying water to the rim flushing rim conduit 54." *Id.* at 3:12–17.

3. Analysis of Independent Claims 1, 9, 15, and 24

Petitioner argues that Brown alone, or Brown in view of Ho renders obvious all of the elements recited by the independent claims. Pet. 60. Petitioner maps most of the claim elements to Brown, as illustrated by Petitioner's annotations to Brown's Figure 1. Pet. 61–70. Annotated Figure 1 is reproduced below.

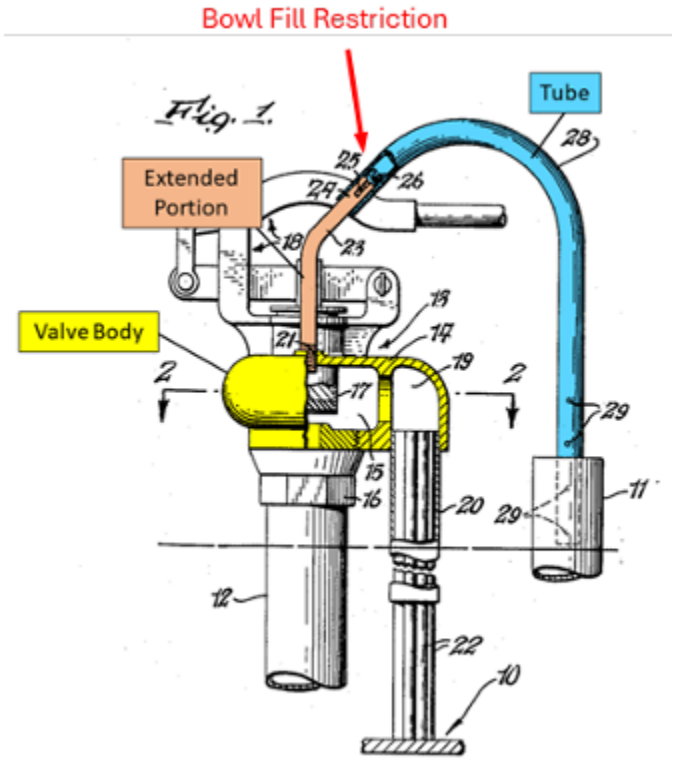

Annotated Figure 1 shows valve assembly 13 colored yellow and mapped to the claimed valve body; adapter tube 23 colored orange and

mapped to the claimed extended portion; and tube 28 colored blue and mapped to the claimed tube. *See id.*

Petitioner maps the claimed bowl fill restriction to Browns' set screw 26 in combination with slotted portion 24 of adapter tube 23. Pet. 68 (quoting Ex. 1021, 3:52–56); Pet. 69 ("Brown discloses a tube attached directly to the portion of the adaptor tube 23 that forms the metering valve and houses set screw 26"); *see also* Pet. Reply 21 ("Brown's bowl fill restriction is the ***combination*** of the slotted portion of adaptor tub 23 ***and*** set screw 26."). Petitioner illustrates its mapping by annotating Brown's Figure 3. Pet. 66. Annotated Figure 3 is reproduced below.

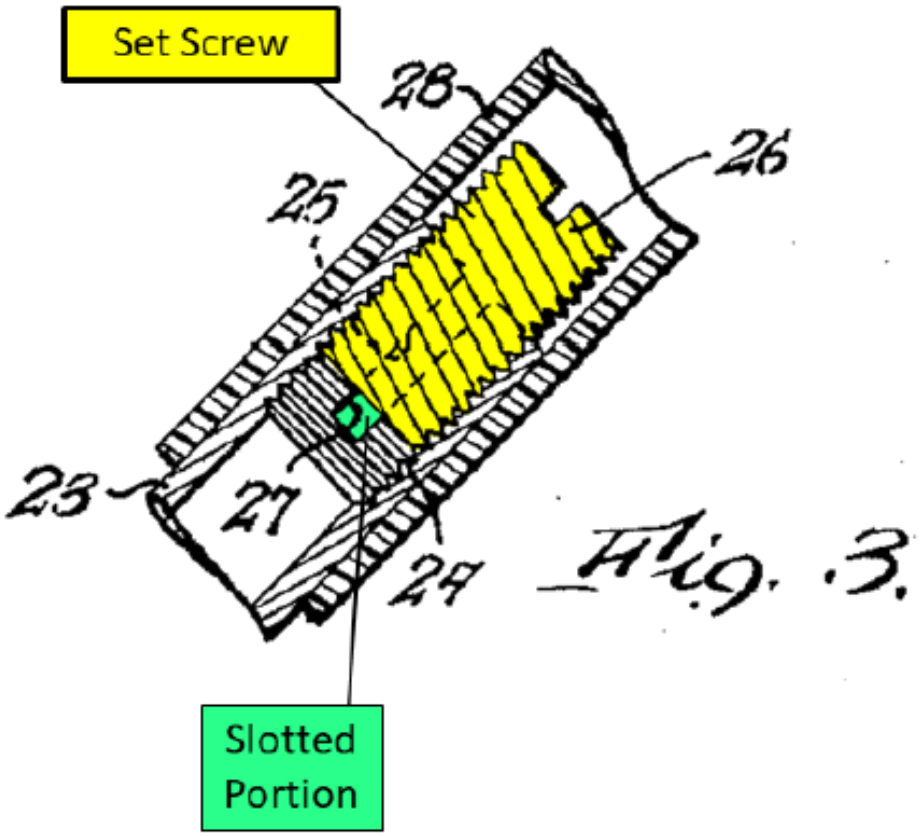

Annotated Figure 3 shows set screw 36 colored yellow and slotted portion of adaptor tube 23 colored green.

Petitioner relies upon Ho with respect to two limitations. First, Petitioner relies upon Ho to teach integrally molding an extended portion with a toilet fill valve, as required by limitations 1A, 9C2, 15A1, and 21A. Pet. 60, 63, 70.

Second, "to the extent it is argued that a tube that is configured to attach directly to the bowl fill restriction is not present in Brown," Petitioner relies upon Ho to teach a tube that is configured to attach directly to the bowl fill restriction, as required by limitations 1E, 9D, 15C, and 24E and argues that a POSITA would have been motivated to use Ho's valve in Brown. Pet. 69–70. We note, however, that Petitioner also relies upon Brown alone to teach limitations 1E, 9D, 15C, and 24E. *Id.* at 75. Because we determine that Brown alone teaches limitations 1E, 9D, 15C, and 24E, we do not need to reach Patent Owner's arguments concerning the alternative combination of Brown and Ho.

Patent Owner does not specifically dispute Petitioner's contentions regarding the majority of the limitations of claims 1, 9, 15, and 24 (*see generally* PO Resp.) and after reviewing Petitioner's evidence and analysis, we determine that Brown and Ho teach the undisputed limitations of claims 1, 9, 15, and 24. Patent Owner, however, disputes that limitations 1A, 9C2, 15A1, and 24A and limitations 1E, 9D, 15C, and 24E are taught by Brown and Ho. We address these limitations below.

a) Limitations 1A, 9C2, 15A1, and 24A

Limitation 1A recites "wherein the extended portion is integrally molded with the body." Ex. 1001, 9:64–65. Limitation 9C2, 15A1, and 24A recite substantially the same. *Id.* at 10:56–57, 11:19–20, 12:19–20. We

construe "integrally molded with" to mean molded together as a single structure.

The Petition maps the claimed extended portion to Brown's adapter tube 23. Pet. 63. Brown's adapter tube 23 is attached by external threads to opening 21 in valve casing 14 (Ex. 1021, 2:4–6) and, thus, adapter tube 23 is not integrally molded with valve casing 14.

Petitioner argues that "it would have been obvious to mold the toilet fill valve body of Brown together with the extended portion 23 in a single mold." Pet. 63. Petitioner points to Ho as teaching that it was known to integrally mold outlets on a toilet fill with an extended portion to attach to a water flow regulator. *Id*.

Patent Owner disputes that Ho discloses an integrally molded extended portion. PO Resp. 21–31, 57; PO Sur-reply 6–14, 26. Much of Patent Owner's arguments, however, are directed to Ho's failure to disclose a plastic molded material. *See, e.g.*, PO Resp. 21–31; PO Sur-reply 6–14. These arguments are not persuasive as we do not construe the claim term "integrally molded with" to require a plastic material.

We have considered Patent Owner's arguments, but we are persuaded by Petitioner's arguments and evidence that a POSITA would have understood that Ho teaches integrally molding an extended portion with a valve body.

To illustrate the extension, Petitioner combined and annotated portions of Ho's Figures 3 and 5. Pet. 34.

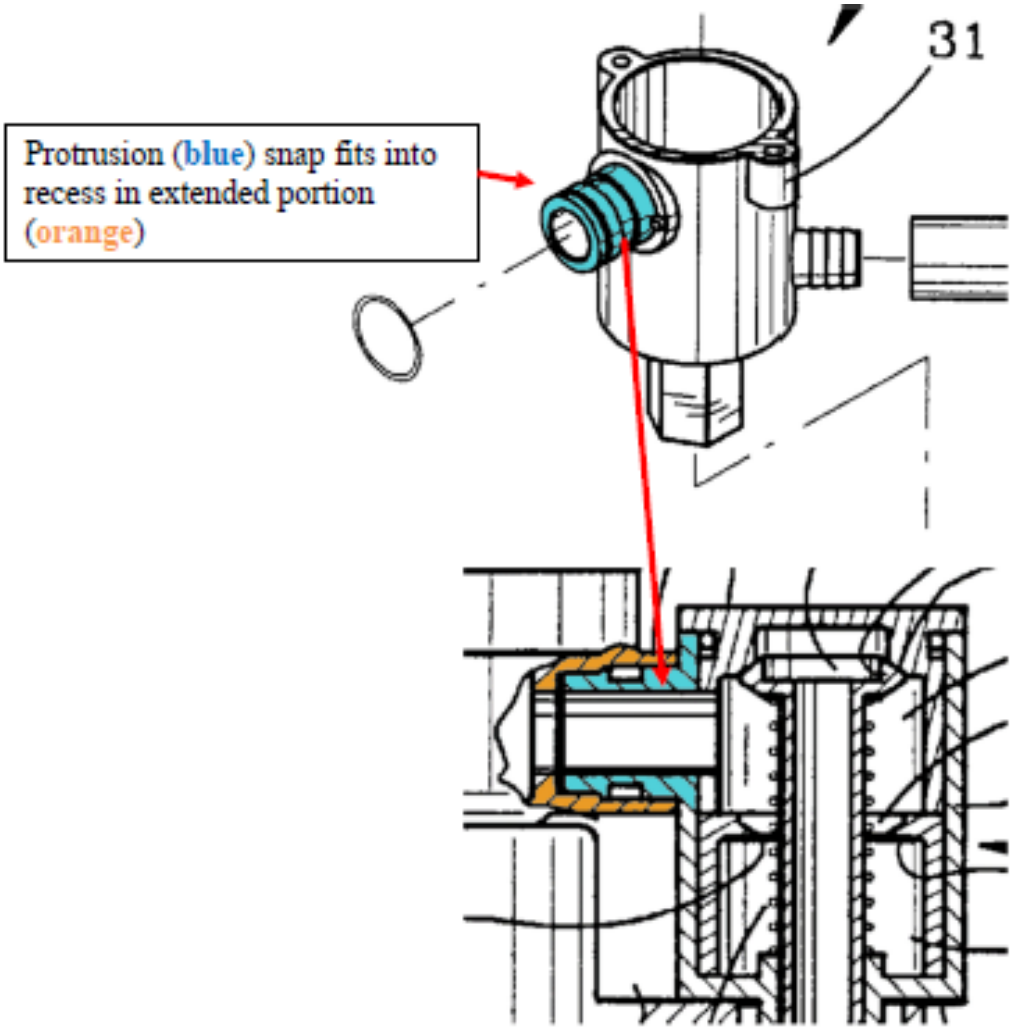

Petitioner's annotated figure includes diverter valve 30 from Ho's Figure 5 and a portion of Ho's Figure 3 in which diverter valve 30 attaches to the body of water supply pipe 21. Pet. 34. Petitioner colored the extended portion orange and the protrusion is colored blue. *Id.*

The portion of Figure 3 where the diverter valve 30 attaches to the body of the toilet fill valve can be more clearly seen in Patent Owner's annotated version of Ho's Figure 3. PO Sur-reply 11.

Patent Owner's annotated Figure 3 is reproduced below, with our additional annotations added.

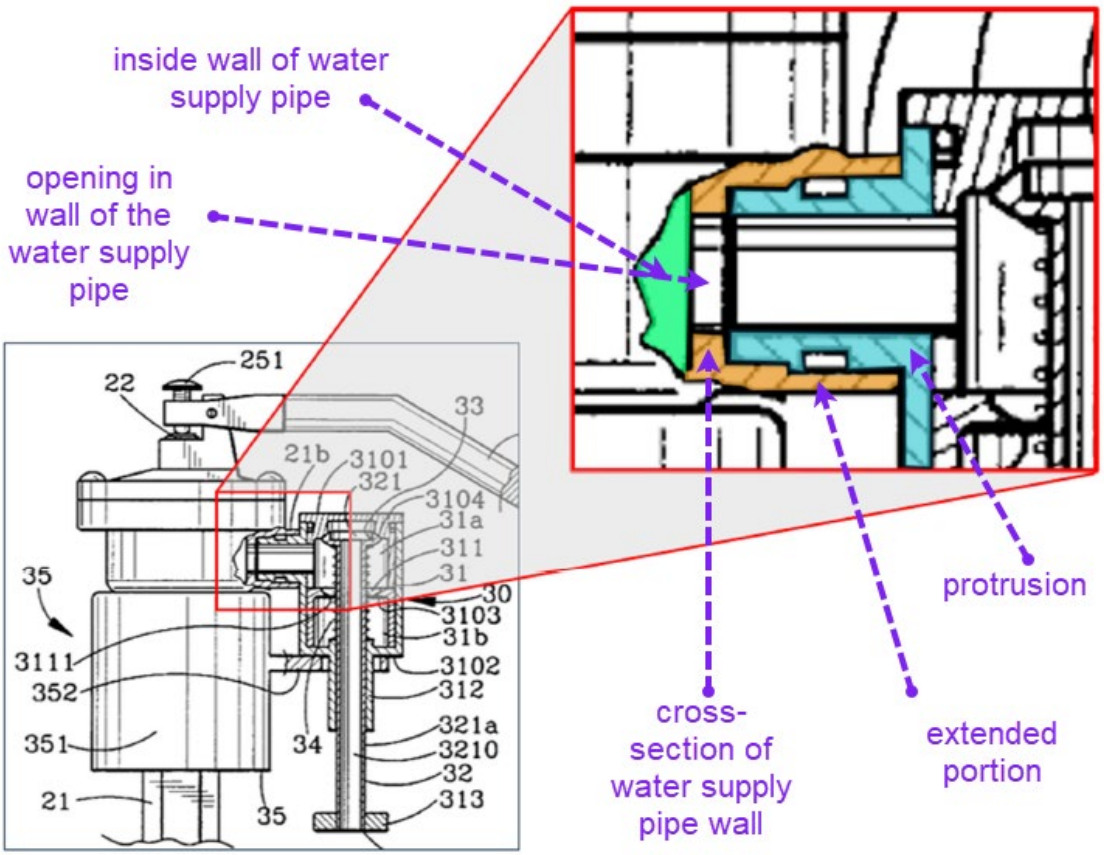

Ho's Figure 3 annotated by Patent Owner, reproduced above, shows a detailed, cutaway, view of diverter valve 30 attached to the body water supply pipe 21, along with our further annotations (in purple) to highlight and label certain features. As in Petitioner's annotated figure, the extended portion is colored orange and the protrusion is colored blue. Patent Owner has additionally colored green a portion of the inner wall of water supply pipe 21.

Because Ho's Figure 3 shows a partial sectional view (Ex. 1022, 2:24–26) and water supply pipe 21 is round, the cross-section of water supply pipe 21's wall, as well as the cross-section of the extension, can be seen in the orange portion. The orange portion is uniformly cross-hatched

and no line separates the water supply pipe 21's wall and the extension to indicate that the water supply pipe 21's wall and the extension are separate parts. Ex. 1036 ¶¶ 52–57. Based on Ho's Figures 3 and 5, Dr. Cameron testifies that a POSITA would have understood that Ho's extended portion is molded together as a single structure of the body of the toilet fill valve. Ex. 1004 ¶ 124; Ex. 1036 ¶¶ 52–58.

Dr. Cameron further testifies that Ho's Figures 2 and 5 confirms that extended portion is molded together as a single structure of the body of water supply pipe 21. *Id.* ¶¶ 58–59. Dr. Cameron states:

> Figure 2 does not alter my conclusions. If the extended portion in Figure 2 was not integral to the fill valve, it would be shown separately as with the components of the diverter valve means 30 that are shown in Figure 5. The fact that Ho does not separately label the extended portion in Fig. 2 or otherwise disclose its components or manner of connection with the body of the toilet fill valve confirms to me that it is integral with the fill valve itself and not attached separately. Moreover, a POSITA would understand that in the system depicted in Figure 2 of Ho, the protrusion is integrally molded with the body because there is nothing to indicate another connection.

Id. ¶ 59.

Based on this evidence, we are persuaded that a POSITA would have understood that Ho teaches integrally molding an extended portion with a valve body.

Patent Owner further argues that the Petition does not articulate a sufficient motivation to integrally mold Brown's adapter tube 23 with the body of the toilet fill valve (i.e., water supply pipe 21). PO Resp. 51–52, 57; PO Sur-reply 26.

We disagree and are persuaded by Dr. Cameron's testimony that a POSITA would have had sufficient reason to integrally mold Brown's extension with the body of water supply pipe 21.

Dr. Cameron testifies that integrally molding an extension with an inlet device "would be advantageous in improving the strength and integrity of the connection, and to make it easier to manufacture and assemble." Ex. 1004 ¶ 125; *see* Pet. 29. Dr. Cameron also testifies that "it would have been obvious to mold the toilet fill valve body of Brown together with the extended portion 23 in a single mold, given the more recently developed molding techniques that were not readily available in 1959 when Brown was filed." Ex. 1004 ¶ 253; *see also* Ex. 2008, 42:5–16, 42:21–45:11 (testimony of Dr. Cameron describing advances in molding techniques). Dr. Cameron further testifies:

> [F]orming the extended portion of Ho as a single structure with the body of the toilet fill valve would be an insignificant step in terms of manufacturing complexity, whereas manufacturing it separately and adding it as an additional connection to the body of the fill valve would negatively impact the reliability of the connection and increase the cost.

Ex. 1036 ¶ 59; *see also id.* ¶ 71 ("to allow for a . . . more compact and robust design").

Given Dr. Cameron's testimony, we are persuaded by Petitioner that a POSITA would have been motivated to integrally mold, as taught by Ho, Brown's adapter tube 23 with the body of water supply pipe 21. *See In re Larson*, 340 F.2d 965, 968 (CCPA 1965) ("[T]he use of a one piece construction instead of the [multipiece] structure disclosed in [the prior art] would be merely a matter of obvious engineering choice.").

Petitioner's analysis and evidence sufficiently shows that the combination of Brown and Ho teaches Limitations 1A, 9C2, 15A1, and 24A.

b) Limitations 1E, 9D, 15C, and 24E

Limitation 1E recites "a tube that is configured to attach directly to the bowl fill restriction." Ex. 1001, 10:17–18. Limitation 9D recites "a tube that is in contact with the water flow regulator." *Id.* at 10:64–65. Limitation 15C recites "attaching a tube directly to the bowl fill restriction." *Id.* at 11:28. Limitation 24E recites "a tube configured to attach directly to the bowl fill restriction." *Id.* 12:36–37.

The Petition maps the claimed "tube" to Brown's tube 28 and the claimed "bowl fill restriction" to Brown's slotted portion 24 of adapter tube 23 and set screw 26. Pet. 68 (quoting Ex. 1021, 3:52–56) (quoting Ex. 1021, 3:45–72), 69; *see also* Pet. Reply 21 ("Brown's bowl fill restriction is the ***combination*** of the slotted portion of adaptor tube 23 ***and*** set screw 26."). The Petition's mapping is consistent with Brown's disclosure that "[t]he slotted portion 24 of adapter tube 23 and the set screw 26 form an adjustable metering valve." Ex. 1021, 3:35–72. The Petition contends: "Brown discloses a tube attached directly to the portion of the adaptor tube 23 that forms the metering valve and houses set screw 26." Pet. 69.

Patent Owner argues that Brown does not teach this limitation because Brown's tube 28 does not attached directly to set screw 26, but instead attaches to adapter tube 23. PO Resp. 54–55; Pet. Reply 23–25. In particular, Patent Owner argues that the adapter tube 23 cannot be the same structure as the bowl fill restriction. Pet. Reply 25.

Patent Owner does not convince us that the claims preclude the bowl fill restriction from being part of the extended portion. Requiring such

would be inconsistent with the '105 patent's specification and how Brown defines its adjustable metering valve. Petitioner's mapping is consistent with the '105 patent, which discloses that "bowl fill valve 109 may be included within the body of the toilet fill valve 100 as a portion of the toilet fill valve 100 in a single piece construction." Ex. 1001, 2:17–23; *see also id.* at 4:2–11, Figs. 1, 2. Petitioner's mapping is also consistent with Brown's disclosure that, "[t]he slotted portion 24 of adapter tube 23 and the set screw 26 form an adjustable metering valve for confining the flow of water through the restricted opening 27 formed between the slots 25 of portion 24 and the end of set screw 26." Ex. 1021, 3:52–56.

As Petitioner points out, Browns' set screw 26 in combination with slotted portion 24 of adapter tube 23 forms Brown's adjustable metering valve. Pet. 68 (quoting Ex. 1021, 3:45–72); 69 ("Brown discloses a tube attached directly to the portion of the adaptor tube 23 that forms the metering valve"); *see also* Pet. Reply 21 ("Brown's bowl fill restriction is the ***combination*** of the slotted portion of adaptor tube 23 ***and*** set screw 26."). Brown discloses that long flexible tube 28 "is adapted to slide snugly over the slotted portion 24 of adapter tube 23." Ex. 1021, 3:56–64.

We determine that the Petition sufficiently shows that Brown discloses limitations 1E, 9D, 15C and 24E.

c) Conclusion as to Independent Claims 1, 9, 15, and 24

Petitioner has shown by a preponderance of the evidence that claims 1, 9, 15, and 24 are unpatentable over Brown and Ho.

4. Analysis of Dependent Claims 2 and 14

Claim 2 depends from claim 1 and additionally recites "wherein the extended portion of the body extends radially from a longitudinal axis of the toilet fill valve." Ex. 1001, 10:21–23. Claim 14 depends from claim 9 and recites a similar limitation. *Id.* at 11:14–16.

Petitioner acknowledges that "Brown does not disclose its extended portion 23 extending radially" and argues that Ho discloses this feature. Pet. 75. Citing the testimony of Dr. Cameron, Petitioner argues:

> [W]hen integrally molding the toilet fill valve with the extended portion, as would have been obvious for the reasons stated above, a POSITA would have readily molded the extended portion to extend radially from the longitudinal axis of the toilet fill valve to more readily facilitate the connection with the bowl fill restriction. [Ex. 1004 ¶ 312.] Furthermore, such an arrangement (i.e., where the extended portion extends radially) allows for flexibility in order to create a more compact toilet fill valve system that could be adapted to fit in more toilet tank designs. *Id.*

Pet. 75; *see also* Pet. Reply 23 (citing Ex. 1036 ¶ 71).

Patent Owner responds that:

> a POSITA would not have been motivated to make the proposed modification, nor does the Petition include any analysis regarding why a POSITA would be motivated to move from a vertical extended portion to a radial extended portion. Indeed, a radial extended portion is directly counter to the stated goals of Brown (*e.g.*, reducing noise caused by turbulence), at least insofar as it introduces another sudden directional change into the fluid flow system.

PO Resp. 58–59 (citing Ex. 2013 ¶ 242).

Brown's adapter tube 23 (i.e., the extended portion) does not extend radially from a longitudinal axis of valve assembly 13 (i.e., the toilet fill valve). Ex. 1021, Fig. 1. Mr. Jobin testifies that a POSITA would not be motivated to move adapter tube 23 from a vertical position to a radial

position because "a radial extended portion is directly counter to the stated goals of Brown (e.g., reducing noise caused by turbulence), at least insofar as it introduced another sudden directional change into the fluid flow system." Ex. 2013 ¶ 242; *see* Ex. 1021, 1:9–62.

Patent Owner's argument is persuasive. Petitioner's analysis and Dr. Cameron's testimony is conclusory and does not sufficiently explain why a POSITA would be motivated to make the proposed modification to Brown. For example, Petitioner does not sufficiently explain how such a modification would result in a more compact toilet fill valve system that could be adapted to fit in more toilet tank designs. Further, neither Petitioner nor Dr. Cameron sufficiently address Mr. Jobin's testimony regarding Brown's desire for a quieter toilet. *See* Pet. Reply 23; Ex. 1036 ¶ 71.

Petitioner fails to meet its burden to show by a preponderance of the evidence that claims 2 and 14 are unpatentable over Brown and Ho.

5. Analysis of Dependent Claim 6

Claim 6 depends from claim 1 and is reproduced below:

> 6. The system of claim 1, wherein the toilet fill valve further comprises:
>
> a float; and
>
> an actuating arm coupled to the float, wherein the actuating arm extends radially relative to a longitudinal axis of the toilet fill valve, wherein the actuating arm is angularly offset relative to the bowl fill valve, thereby preventing an interference with the bowl fill restriction and a translational stem that extends from the float to a free end of the actuating arm.

Ex. 1001, 10:32–41.

Petitioner argues that the additional limitation of claim 6 "would have been intuitively obvious to a POSITA" and that "[a] POSITA would not design a toilet fill valve with a conventional float attached to a translational arm that was obstructed in some manner from freely translating." Pet. 76 (citing Ex. 1004 ¶ 316); *see also* Pet. Reply 23. Petitioner points to Ho as disclosing a translational stem attached to a float that is angularly offset from a water flow regulator and concludes "[t]hus, Brown and Ho discloses the features of claim 6, thereby rendering it obvious." Pet. 76.

Patent Owner argues that neither Brown nor Ho discloses this limitation and Petitioner's conclusions as to what a POSITA would have known are conclusory. PO Resp. 60–61; PO Sur-reply 26.

Although Brown describes a float that operates linkage 18 (Ex. 1021, 1:16–21, 2:61–62; 2:71), Brown does not depict the float in its figures or provide any other detail as to the configuration of the float. Neither Petitioner nor Dr. Cameron sufficiently explains why it would have been obvious to a POSITA to position a transitional arm and float as depicted in the modified version of Brown's Figure 1 or to modify Brown's transitional arm and float to be angularly offset from the waterflow regulator (i.e., the bowl fill valve).[11] *See* Pet. 82; Ex. 1004 ¶ 316. Nor does Petitioner or Dr. Cameron sufficiently explain why Brown would need to be modified, given that Brown's waterflow regulator extends vertically from the toilet fill valve. Ex. 2013 ¶ 246. Petitioner argues that "[a] POSITA would not design a toilet fill valve with a conventional float attached to a translational arm that was obstructed in some manner from freely translating" (Pet. 76), but

[11] Patent Owner asserts that a POSITA would have understood the term "bowl fill valve" in claim 6 to refer to the "water flow regulator" of claim 1. PO Resp. 69 (citing Ex. 1004 ¶ 52; Ex. 2013 ¶ 243).

Petitioner does not assert that Brown's float and translational arm are obstructed, such that they need to be modified.

Further, although the Petition also points to Ho, the Petition does not suggest that Brown be modified to incorporate Ho's angular offset or provide any sufficient explanation as to why a POSITA would be motivated to do so. *See* Pet. 76.

Petitioner fails to meet its burden to show by a preponderance of the evidence that claim 6 is unpatentable over Brown and Ho.

6. Analysis of Dependent Claims 3, 8, 10–13, and 20–23

Petitioner challenges claims 3, 8, 10–13, and 20–23 as being unpatentable over Brown and Ho. Pet. 60–79. Claims 3, 8, and 21 depend directly or indirectly from claim 1, claims 10–13 and 22 depend directly or indirectly from claim 9, and claims 20 and 23 depend directly or indirectly from claim 15. Ex. 1001, 10:24–26, 11:1–13, 11:34–41, 12:5–15. Patent Owner makes no arguments directed to the additional limitations of these dependent claims. *See generally* PO Resp., PO Sur-reply. After reviewing Petitioner's arguments and evidence, we determine that Petitioner shows by a preponderance of the evidence that claims 3, 8, 10–13, and 20–23 are unpatentable over Brown and Ho.

G. Ground 4 — Brown, Ho, and the Quick Connection Art

Petitioner contends that claims 4, 5, 7, and 16–19 are unpatentable over Brown, Ho, and the Quick Connection Art. Pet. 79–81. "Quick Connection Art" refers to Bjerke, Calmettes, Hall, and Kimber. *Id.* at 7.

1. Overview of Bjerke

Bjerke is a U.S. Patent entitled "Quick Connection Water Flow System." Ex. 1017, code [54]. A discloses embodiment includes a quick connect/disconnect between two fittings and the backflow preventer. *Id.* at 5:53–56. Bjerke teaches that the quick connect/disconnect is of the type conventionally sold for hose couplings. *Id.*

2. Overview of Calmettes

Calmettes is a U.S. Patent entitled "Device for Locking Two Coaxial Tubes," which discloses coupling devices for connecting the ends of coaxial tubes, such as those found in motor vehicle cooling circuits or other industrial applications. Ex. 1018, code [54], 1:4–10. A disclosed embodiment includes a locking mechanism having an outer tube with a longitudinal groove and an inner tube with radially projecting guides. *Id.* at 2:10–24, 3:30–63, Figs. 1a–4. A flexible locking tab, attached to the outer tube and positioned adjacent to a groove, contains apertures to receive the bosses. *Id.* at 3:59–4:21.

3. Overview of Hall

Hall is a U.S. Patent titled "Hose Coupling," which relates to hose-coupling techniques that that enable connection of adjacent hose sections, without using coupling threads. Ex. 1019, 1:8–14. A disclosed embodiment includes one section having bayonet slots and the other section having corresponding lugs that fit into the bayonet slots. *Id.* at 1:66–85. A feature of this coupling is a spring-biased sleeve or collar that slides over one of the hose sections and is equipped with locking plates that close the entrance to the bayonet slots once the lugs are inserted, thereby locking the hose

sections together. *Id.* at 1:100–2:7. The embodiment also includes a gasket to prevent leakage at the junction of the hose sections. *Id.* at 1:86–99.

4. Overview of Kimber

Kimber is a Canadian patent document titled "Quick Connect Pipe Coupling," which discloses coupling techniques for creating a sealed connection between two conduits, such as hoses and radiators automobiles. Ex. 1020, code [54], 1. The coupling technique employs a tubular male fitting with an external conical portion and a tubular female fitting that snugly fits over the male fitting, featuring a complementary internal conical portion. *Id.* at 2. An embodiment includes axially oriented guide means (in the form of keying members on one fitting and guide slots on the other fitting) for proper angular alignment and relative axial movement of the fittings, as well as locking means (in the form of detent projections, on one fitting, that are received within apertures, on the other fitting) that secure the fittings axially upon assembly. *Id.* at 3, 6–7.

5. Analysis of Dependent Claims 4, 5, 7, 17, and 18

Petitioner challenges claims 4, 5, 7, 17, and 18 as being unpatentable over Brown, Ho, and the Quick Connection Art. Pet. 79–81.

Claims 4, 5, and 7 depend from claim 1. Claim 4 recites "wherein the bowl fill restriction is configured to be clamped to the extended portion of the body." Ex. 1001, 10:27–28. Claim 5 recites "wherein the bowl fill restriction is configured to be snapped onto the extended portion of the body." *Id.* at 10:29–31. Claim 7 recites "wherein the bowl fill restriction further comprises a nipple that is configured to insert into the tube." *Id.* at

10:42–44. Claims 17 and 18 depend indirectly from claim 15 and recites limitations similar to claims 4 and 5, respectively. *Id.* at 11:34–41.

Referring to its arguments made with respect to Ground 2, Patent Owner argues that Petitioner's motivation to combine analysis is deficient with respect to the combination of Brown, Ho, and the Quick Connection Art. PO Resp. 51[12] (referencing Section VII.A.2.b (*id.* at 37–38); Ex. 2013 ¶¶ 209–210). According to Patent Owner, Petitioner's arguments are conclusory and do not address any specific considerations as why a POSITA would have been motivated to combine Brown with any of the specific fluid flow connections discloses in the Quick Connection Art. *See* PO Resp. 37–38. Patent Owner's argument is persuasive.

The Petition maps the claimed "tube" to Brown's tube 28 and the claimed "bowl fill restriction" to Brown's slotted portion of adapter tube 23 and set screw 26. Pet. 65; Pet. Reply 21. The remainder of adapter tube 23 is mapped to the claimed extended portion. Pet. 65. Adapter tube 23 has internally threads to receive set screw 26, such that an adjustable water regulator is formed. Ex. 1021, 3:47–56. Tube 28 fits snuggly over the slotted portion of adapter tube 23 in such a way that water flows through slots 25. *Id.* at 3:56–64.

Petitioner broadly asserts that the claimed fluid flow connections are well-known and that it would have been obvious to a POSITA to use any known method of connecting two fluid channels to one another. Pet. 52–59,

[12] Patent Owner's argument appears under sub-heading (c) on page 51 of the Patent Owner's Response. Sub-heading (c) refers to Guoxin and not Brown. This appears to be a typographical error as sub-heading (c) is part of Section VII.B, which addresses grounds based on Brown. *See* PO Resp. 51. We, thus, consider Patent Owner's argument with respect to Brown.

79. Petitioner's analysis, however, does not provide any sufficient explanation as to why or how it would have been obvious to a POSITA to replaced Brown's threaded slotted portion and set screw 26 with any of the fluid flow connections of the Quick Connection Art. Such a modification would seemingly impact Brown's water regulator (i.e., screw 26 and slotted portion of adaptor tube 23).

Petitioner fails to meet its burden to show by a preponderance of the evidence that claims 4, 5, 7, 17, and 18 are unpatentable over Brown, Ho, and the Quick Connection Art.

6. Analysis of Dependent Claims 16 and 19

Claim 16 depends from claim 15 and recites "further comprising preventing the bowl fill restriction from detaching from the extended portion of the body." Ex. 1001, 11:31–33. Claim 19 depends from claim 16 and recites "wherein preventing the bowl fill restriction from detaching from the extended portion further comprises rotating the bowl fill restriction with respect to the extended portion." *Id.* at 12:1–4.

For these limitations, Petitioner contends:

> Brown discloses preventing detachment by use of a set screw 26, which is inserted into a recess in extended portion 23, and turned or rotated to adjust the amount of water flowing therethrough, thereby satisfying the elements recited by dependent claims 16 and 19. EX1021, 3:45-71; EX1004, ¶¶351-353.

Pet. 81. Petitioner alternatively contends:

> Dependent claim 19 would also have been obvious over Brown in view of Hall. EX1004, ¶353. Hall, discussed in Section VIII.B above, discloses a well-known coupling, which upon insertion, can be rotated to lock in place. EX1004, ¶353. This is the same configuration shown in Figures 6A-6C of the '105

> patent. *Id.* Thus, Brown and Ho, in view of Hall therefore renders dependent claim 19 obvious. *Id.*

Pet. 81.

Patent Owner argues that Petitioner cannot rely upon Brown's set screw to meet this additional limitation because Petitioner replaced Brown's set screw with Ho's diverter. PO Resp. 61–62. Patent Owner's argument is misplaced because it does not adequately address the grounds set forth in the Petition. As explained above, in one alternative, Petitioner relies upon Brown alone.

In the Petition, Petitioner points to Brown's set screw 26. Pet. 81 (citing Ex. 1021, 3:45–71; Ex. 1004 ¶ 351); *see also* Pet. Reply 24. Brown discloses that adapter tube 23 is provided with internally threaded portion that receives set screw 26. Ex. 1021, 3:47–51. The threads of set screw 26 prevent the water flow regulator from detaching from the internally threaded portion of adapter tube 23.

Petitioner shows by a preponderance of the evidence that claims 16 and 19 are unpatentable over Brown, Ho, and the Quick Connection Art.

H. Ground 5 – Schuster

Petitioner challenges claims 1–24 as being anticipated by Schuster (Ex. 1029). Pet. 82–98.

Schuster is available as prior art if the '105 patent is only entitled to claim priority to the January 27, 2014 filing date of parent Application No. 9,139,993 ("the '993 Application") and not entitled to claim priority to earlier filing dates of other parent applications. Ex. 1001, code 63. On its face, the '105 patent claims priority to a number of earlier parent applications, including Application No. 12/786,904 ("the '904 Application")

filed May 25, 2010, and the Application No. 10/798,606 ("the '606 Application") filed March 11, 2004.[13] *Id.*

Petitioner contends that the '105 patent is not entitled to claim priority to the filing date of the earlier parent applications, and, thus, Schuster, a parent application of the '105 patent, is available as prior art.[14] Pet. 82; *see also* Pet. Reply 24–27. Petitioner alleges that the earlier parent applications, specifically Application No. 12/786,904 (the '904 Application), do not provide written description support for the '105 patent's claim term "bowl fill restriction." According to Petitioner, "bowl fill restrictions" are understood to be fixed devices for restricting the flow of water and not adjustable devices, such valves. *Id.* at 9–10. Petitioner argues that only valves are supported by the earlier parent applications. *Id.* Petitioner, thus, asserts that earliest effective filing date of the '105 patent's claims is the filing date of the '993 Application, January 27, 2014. *Id.* at 82.

To be entitled to claim the benefit of an earlier filing date under 35 U.S.C. § 120 each application in the priority chain must comply with the written description requirement of 35 U.S.C. § 112(a). *See Hollmer v. Harari*, 681 F.3d 1351, 1354–55 (Fed. Cir. 2012). The test for written description is an objective inquiry into the four corners of the specification from the perspective of a POSITA. Using this test, the invention must be

---

[13] The parties do not dispute that the '105 patent and the earlier parent applications, including the '904 Application and the '606 Application, have the same pertinent portions of their specifications. *See* PO Resp. 71 n.16; Ex. 1004 ¶ 324.

[14] Schuster issued on January 31, 2012, from Application No. 12/786,904, filed on May 25, 2010. Ex. 1029, code (21), (22), (45). Schuster, thus, issued more than one year prior to January 27, 2014.

described in a manner sufficient to demonstrate that the inventor actually invented the claimed invention. *Ariad Pharm., Inc. v. Eli Lilly & Co.,* 598 F.3d 1336, 1351 (Fed. Cir. 2010). "One shows that one is 'in possession' of the *invention by* describing *the invention*, with all its claimed limitations, not that which makes it obvious." *Lockwood v. Am. Airlines, Inc.*, 107 F.3d 1565, 1572 (Fed. Cir. 1997). Written description is a question of fact judged as of the relevant filing date. *Falko–Gunter Falkner v. Inglis,* 448 F.3d 1357, 1363 (Fed. Cir. 2006). An *ipsis verbis* disclosure, however, is not necessary to satisfy the written description requirement. *Vas–Cath Inc. v. Mahurkar*, 935 F.2d 1555, 1563 (Fed. Cir. 1991). The disclosure need only reasonably convey to a POSA that the inventor had possession of the subject matter in question, even if every nuance of the claims is not explicitly described in the specification. *Id.*; *see Ariad*, 598 F.3d at 1351.

Patent Owner argues that the '105 patent claims were "fully supported as of the filing date of at least the '606 Application . . . March 11, 2004" because the '606 Application discloses regulating water flow and a POSITA would know that appropriate devices for regulating water flow includes non-adjustable waterflow restrictors. PO Resp. 63–65; PO Sur-reply 26–29.

Patent Owner's argument is persuasive. The '606 Application discloses:

> [W]hen the toilet fill valve 100 is open and water flows from the water inlet 103 to the water outlets 106 and into a toilet tank, an amount of water is also supplied to the bowl fill valve inlet 113 that flows through the bowl fill valve 109 and out the bowl fill valve outlet 116. By virtue of the manual setting of handle 119 of the bowl fill valve 109, the *flow* of *water* through the bowl fill valve 109 is *regulated*. In this manner, the flow of water is *regulated so that enough water flows out of the bowl fill valve 109 to fill a toilet bowl without wasting any water down a drain.*

Ex. 1012, 47, ¶ 8 (emphasis added); *see also* Ex. 1001, 2:28–39. As can be seen from the passage above, the '606 Application discloses *regulating* an amount of water supplied to a toilet bowl using a valve (i.e., a water flow regulator). Ex. 2013 ¶ 288.

Further, the '606 Application states:

> The bowl fill valve 109 may be, for example, a ball valve, a gate valve, a globe valve, a plug valve, a diaphragm valve, a butterfly valve, a needle valve, a sliding gate, a quick turn valve, a knife valve or *any other appropriate type of valve as can be appreciated by those with ordinary skill in the art.*

Ex. 1012, 48; *see also* Ex. 1001, 3:4–8. Mr. Jobin testifies that a POSITA would have understood that appropriate values include restricting flow control valves, which are static, non-adjustable devices, with no moving parts. Ex. 2013 ¶ 276; *see also* Ex. 2009 (disclosing a static flow control valve).

Based on these disclosures of the '606 Application, Mr. Jobin testifies that a POSITA would have understood that the inventor "had possession of a non-adjustable flow control device (such as a restrictor) at the time of filing." Ex. 2013 ¶¶ 277–279.

Petitioner does not sufficiently rebut Mr. Jobin's testimony as to what a POSITA would know from these disclosures of the '606 Application. *See generally* Pet. Reply. Dr. Cameron testimony, cited in the Petition, does not sufficiently address what a POSITA would have understood from these disclosures of the '606 Application. *See* Ex. 1004 ¶¶ 360–369.

Petitioner fails to persuade us that claims 1–24 of the '105 patent are not entitled to priority to the filing dates of the earlier parent application, including the March 11, 2004, filing date of the '606 Application. Petitioner, thus, has not shown that Schuster is prior art to the '105 patent.

Accordingly, Petitioner fails to meet its burden to show, by a preponderance of the evidence, that claims 1–24 are unpatentable over Schuster.

III. CONCLUSION

We determine that Petitioner shows by a preponderance of the evidence that claims 1, 3, 8–13, 15, 16, and 19–24 of the ’105 patent are unpatentable, and has failed to show by a preponderance of the evidence that claims 2, 4, 5, 6, 7, 14, 17, and 18 of the ’105 patent are unpatentable.

In summary:

Claim(s)	**35 U.S.C. §**	**Reference(s)/Basis**	**Claim(s) Shown Unpatentable**	**Claim(s) Not Shown Unpatentable**
1–3, 6, 8–15, 20–24	103	Guoxin, Ho		1–3, 6, 8–15, 20–24
4, 5, 7, 6–19	103	Guoxin, Ho, Quick Connection Art		4, 5, 7, 6–19
1–3, 6, 8–15, 20–24	103	Brown, Ho	1, 3, 8–13, 15, 20–24	2, 6, 14
4, 5, 7, 16–19	103	Brown, Ho, Quick Connection Art	16, 19	4, 5, 7, 17, 18
1–24	102	Schuster		1–24
Overall Outcome			1, 3, 8–13, 15, 16, 19–24	2, 4–7, 14, 17, 18

IV. ORDER

In consideration of the foregoing, it is hereby:

ORDERED that claims 1, 3, 8–13, 15, 16, and 19–24 of U.S. Patent No. 9,103,105 B1 are unpatentable;

FURTHER ORDERD that claims 2, 4–7, 14, 17, and 18 of U.S. Patent No. 9,103,105 B1 have not been shown to be unpatentable; and

FURTHER ORDERED that because this is a Final Written Decision, parties to the proceeding seeking judicial review of the decision must comply with the notice and service requirements of 37 C.F.R. § 90.2. FOR

FOR PETITIONER:

Carolyn Toto
Evan Finkel
PILLSBURY WINTHROP SHAW PITTMAN LLP
carolyn.toto@pillsburylaw.com
evan.finkel@pillsburylaw.com

FOR PATENT OWNER:

Jason Perilla
Kenneth Knox
Thomas Finch
PERILLA KNOX & HILDEBRANDT LLP
j.perilla@pkhip.com
k.knox@pkhip.com
t.finch@pkhip.com