US005249830A

United States Patent [19]

Calmettes et al.

[11] Patent Number: 5,249,830

[45] Date of Patent: Oct. 5, 1993

[54] DEVICE FOR LOCKING TWO COAXIAL TUBES

[75] Inventors: **Lionel Calmettes**, Romorantin-Lanthenay; **Pascal Detable**, Villedieu, both of

[73] Assignee: **Etablissements Caillau**, Issy-Les-Moulineaux, France

[21] Appl. No.: **768,430**

[22] PCT Filed: **Feb. 1, 1991**

[86] PCT No.: **PCT/FR91/00066**

§ 371 Date: **Sep. 26, 1991**

§ 102(e) Date: **Jun. 26, 1991**

[87] PCT Pub. No.: **WO91/11650**

PCT Pub. Date: **Aug. 8, 1991**

[30] **Foreign Application Priority Data**

Feb. 2, 1990 [FR] France 90 01260

[51] **Int. Cl.**[5] **F16L 33/20**

[52] **U.S. Cl.** **285/319**; 285/7; 285/29; 285/921

[58] **Field of Search** 285/7, 26, 29, 399, 285/403, 319, 921; 403/329

[56] **References Cited**

U.S. PATENT DOCUMENTS

753,096	2/1904	Osteen	285/319
2,184,881	12/1939	Martinet	285/7
2,789,839	4/1957	Siebert	285/7
3,212,795	10/1965	Helm et al.	285/7
3,244,437	4/1966	Belicka et al.	285/7
3,245,698	4/1966	Fromknelnt	285/7
3,933,378	1/1976	Sanford et al.	285/319
3,950,014	4/1976	Doubleday	285/7
4,448,470	5/1984	Peterson	285/319
4,618,195	10/1986	Keane	285/7
4,969,667	11/1990	Sauer	285/319
5,104,253	4/1992	Zielinski et al.	403/329

FOREIGN PATENT DOCUMENTS

4003461	8/1990	Fed. Rep. of Germany .	
WO89/09361	10/1989	PCT Int'l Appl. .	
808	of 1892	United Kingdom	285/319
9899	of 1906	United Kingdom	285/319
2051283	1/1981	United Kingdom .	

Primary Examiner—Eric K. Nicholson
Attorney, Agent, or Firm—Marshall & Melhorn

[57] **ABSTRACT**

Device for locking two coaxial tubes designed to be fitted into each other, comprising a longitudinal tab which is elastically flexible in the radial direction, connected to the outer tube and presenting at least one area capable of coming into axial abutment, once the two tubes have been fitted together, with a shoulder provided in register on the outer face of the inner tube and projecting radially with respect thereto. The wall of the outer tube **2** presents a groove **5**, open at the end of the tube, whose lateral edges are parallel to the axis of the tube. The outer face of the inner tube **1** presents two radially projecting guide surfaces, said surfaces being parallel to the axis of the tube and spaced apart from each other by a distance substantially equal to the one separating the lateral edges of &he groove of the outer tube, whilst the free end of the locking tab **7** is located substantially in the transverse plane of the end of the outer tube.

11 Claims, 5 Drawing Sheets

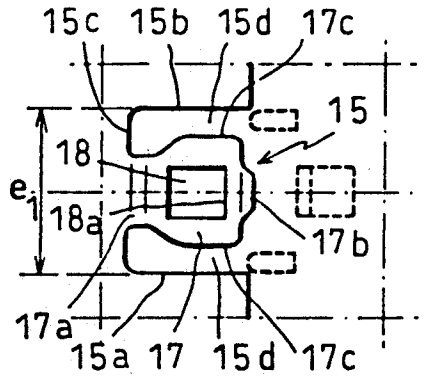

fig. 1b

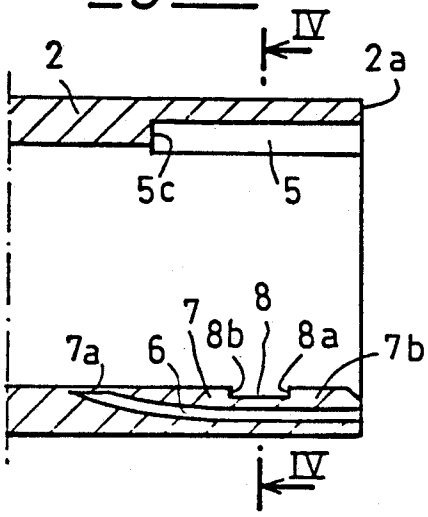

fig. 1a

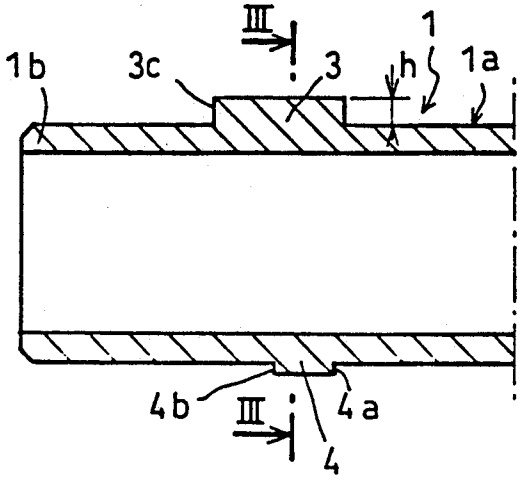

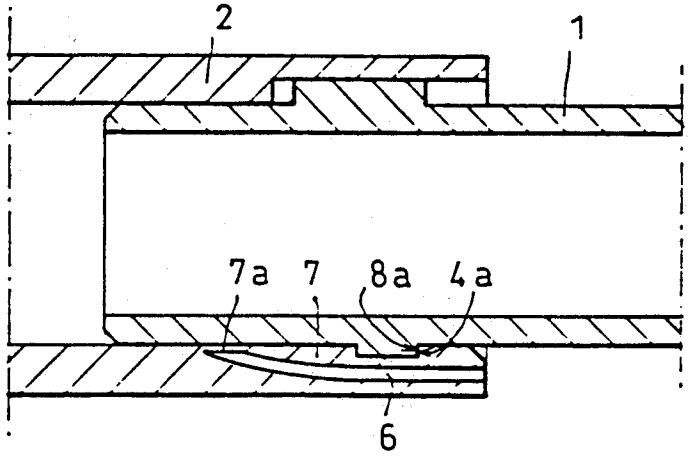

fig. 2

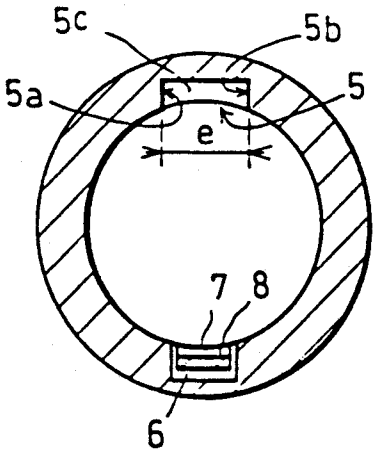

fig. 4

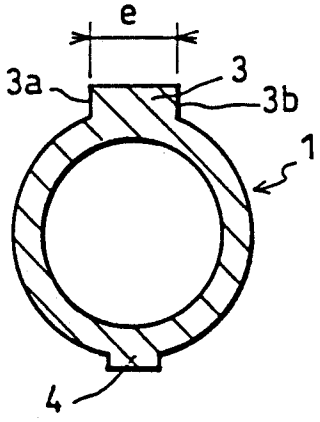

fig. 3

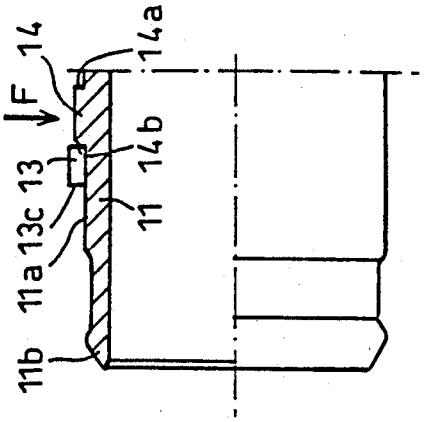

fig.5a

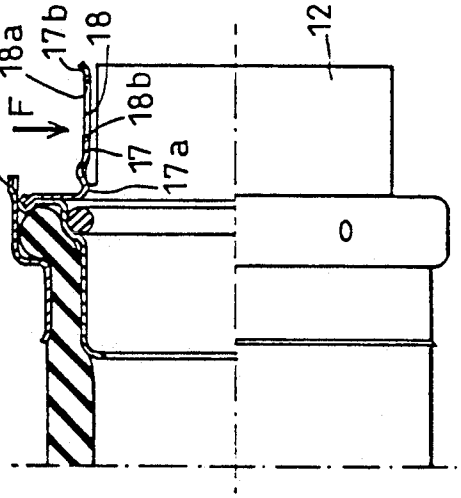

fig.5b

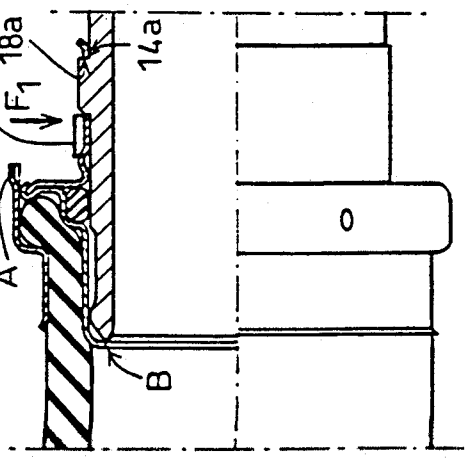

fig.7

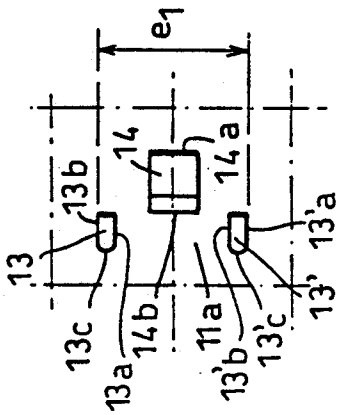

fig.6a

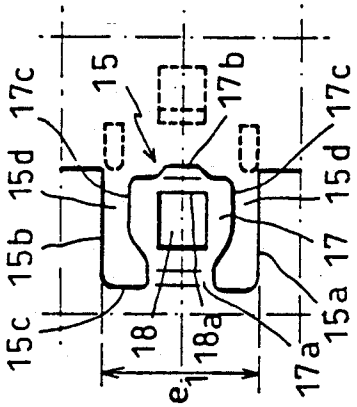

fig.6b

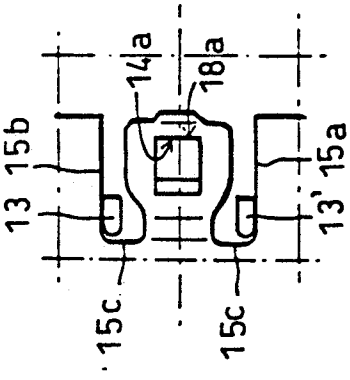

fig.8

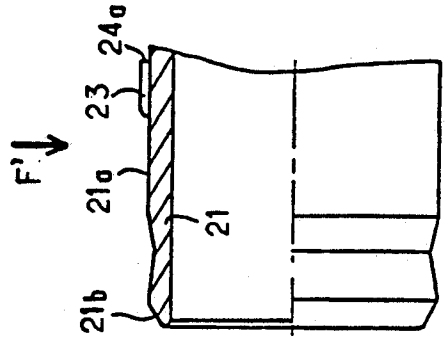

fig_9a

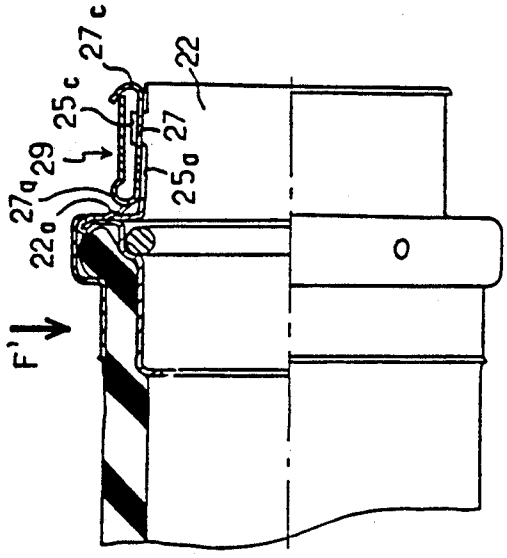

fig_9b

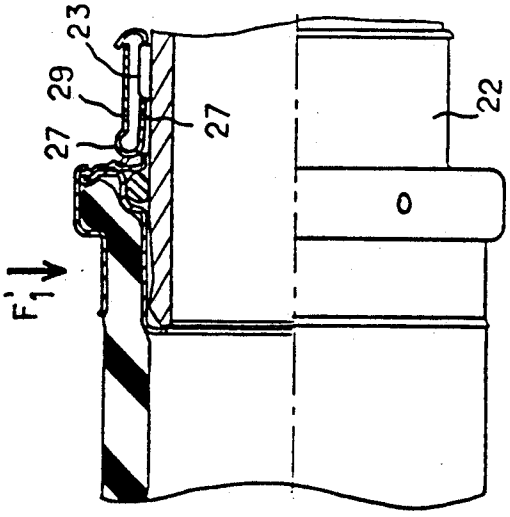

fig_11

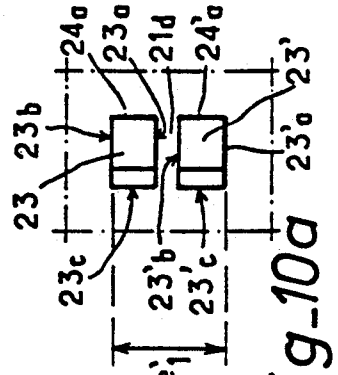

fig_10a

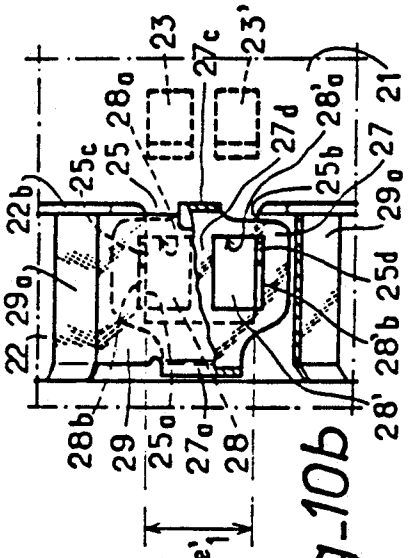

fig_10b

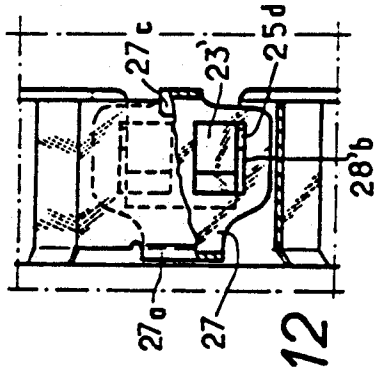

fig_12

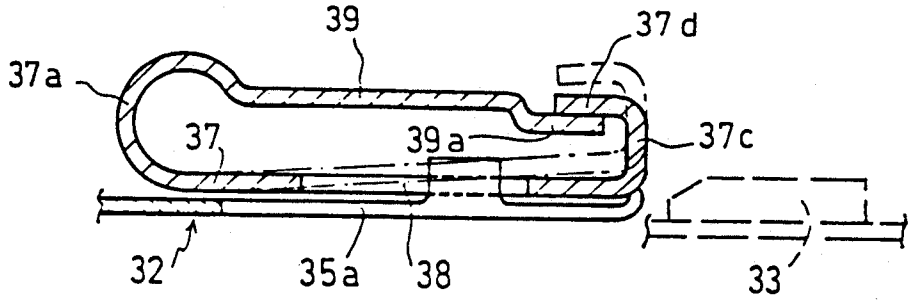

fig_13

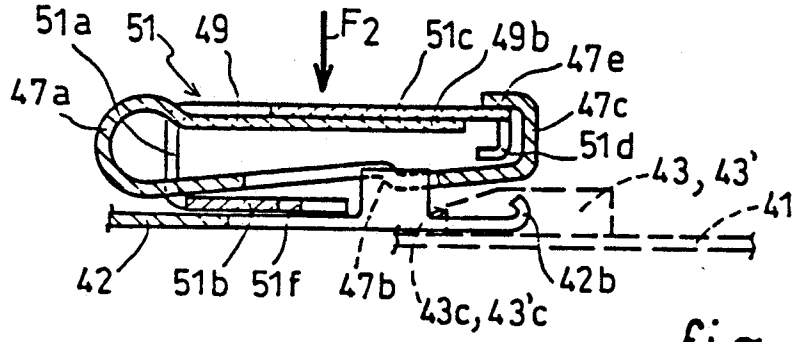

fig_14

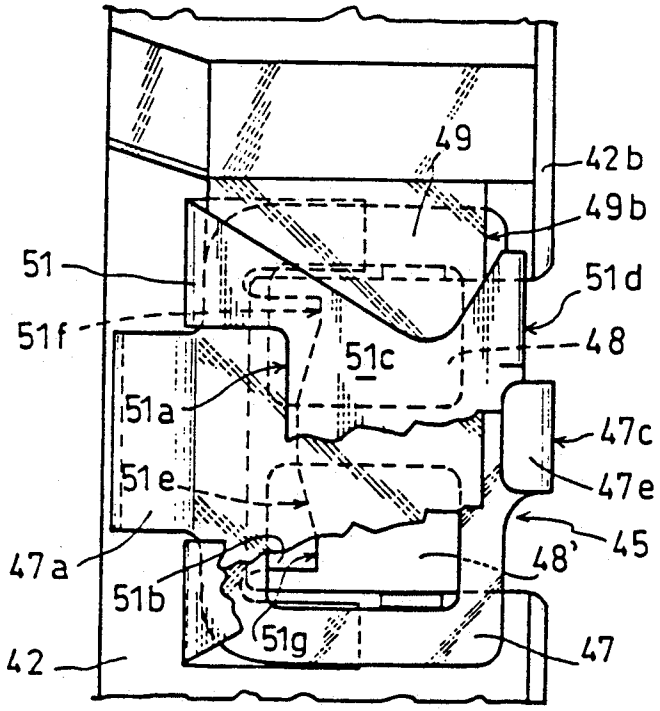

fig_15

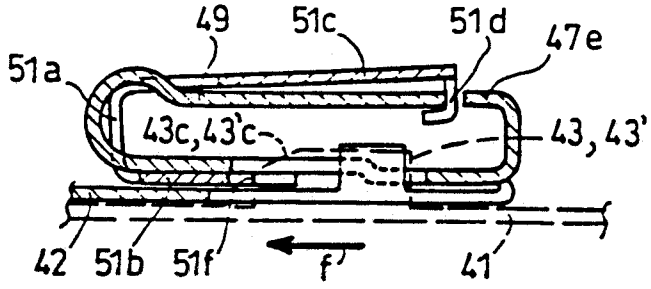

fig_16

DEVICE FOR LOCKING TWO COAXIAL TUBES

In numerous industrial sectors, it is frequently necessary to immobilize two tubes after they have been fitted, generally with mild friction, which has rendered them coaxial one to the other. This is particularly the case when it is desired to proceed with connecting two conduits, for example those constituting elements of a cooling circuit in a vehicle motor. In that case, and particularly if the connection of the two conduits must be effected automatically by means of a motorized apparatus, such as a robot, it is necessary that immobilization of the two conduits be obtained by one movement, preferably in the course of the translation leading to the fit thereof.

More generally, the immobilization of two coaxial tubes may be sought after, both with regard to a relative rotation and to a translation, whenever it is desired to obtain an efficient mechanical connection between the two tubes.

Devices for effecting the desired immobilization have already been proposed, but, in general, when they are efficient with respect to somewhat high efforts aiming at disconnecting the tubes from each other, these devices comprise complementary screwing members or present considerable dimensions. These two drawbacks are no longer admissible in certain technical sectors, either for aesthetic reasons or also because of the small space available for placing in position the connection of the tubes. Finally, relatively high cost prices are frequently the consequence of the various drawbacks of the known devices for immobilizing two tubes.

However, US-A-3 933 378 has already sought to overcome the drawbacks of certain known devices and has described a quick connection of tubes, generally made of metal, but the device proposed by this prior document, apart from the fact that it is difficult to dismantle if it is used in encumbered zones, for example on a vehicle motor, does not allow an easy, visual check of the locking of the connection, since the locking members risk being hidden by a cage fixed to the inner tube

On the other hand, German DE-A-3 815 168, 3 815 170, 3 815 171, 3 815 172, 3 815 173 and 3 914 645 have also proposed solutions to the problem of the quick connection of two tubes, thanks in particular to the use of flexible tabs borne by the outer tube and cooperating with a shoulder of the inner tube. However, these known devices, apart from the fact that they require relatively expensive manufacture, do not appear to procure in practice a sufficiently safe locking. Like the majority of the other known devices, they allow incorrect assemblies which must then be modified. This is in particular due to the fact that they possess a plurality of flexible tabs angularly offset in regular manner so that the "angular indexation" remains uncertain.

The present invention therefore has for its object a quick connection, of the above-mentioned type, ensuring by simple means the immobilization of two coaxial tubes, both with respect to an axial translation and to a relative rotation, and preventing any possibility of an incorrect assembly thanks to a certain "angular indexation". In the following, such a connection will be called "locking device" and it will be noted as from now that it will be advantageously used on devices for connecting two conduits, such as those described in the patent application filed by Applicants this day and entitled:

"Device for connecting a flexible pipe on a rigid tubular joining piece".

Such a locking device comprises, in known manner, a longitudinal tab, elastically flexible in a radial direction, and connected to the outer tube. This tab presents at least one area which can axially abut, once the tubes have been fitted together, against a shoulder provided in register on the outer face of the inner tube and projecting radially therefrom.

According to the invention, the locking device is constituted by the combination of simple arrangements of the ends of the inner and outer tubes, designed to be fitted into each other. The wall of the outer tube presents a groove, open at the end of the tube, of which the lateral edges are parallel to the axis of the tube. On the other hand, the outer face of the inner tube presents two radially projecting guide surfaces, said surfaces being parallel to the axis of the tube and spaced apart from one another by a distance substantially equal to that separating the lateral edges of the groove in the outer tube. Finally, the free end of the flexible longitudinal tab, or locking tab, is located substantially in the transverse plane of the end of the outer tube.

Of course, the locking device may comprise two or more flexible tabs, as well as two or more grooves and pairs of guide surfaces, in a sufficient number. However, it appears that, in numerous applications, the multiplication of the end arrangements of the tubes will not be indispensable.

In any case, in the case of a plurality of flexible tabs, grooves and pairs of guide surfaces, it will be essential, in order to benefit from all the advantages of the invention, that these elements be irregularly distributed over the periphery of the corresponding tubes.

Thanks to the arrangements provided, axial locking and locking in rotation of two tubes fitted into each other is effected simply and in very reliable manner in the course of fit, without any other intervention. This operation may therefore be automatized by means of the machines available at present.

The invention will be more readily understood and various secondary characteristics as well as its advantages will appear in the course of the following description with reference to the accompanying drawings, in which:

FIG. 1*a* and FIG. 1*b* are schematic views in axial section of the ends, arranged according to the invention, of two tubes before they are fitted together.

FIG. 2 is a view similar to the preceding ones after the tubes have been fitted together.

FIG. 3 is a transverse section along III—III of FIG. 1*a*.

FIG. 4 is a transverse section along IV—IV of FIG. 1*b*.

FIG. 5*a* and FIG. 5*b*, are views, partially in axial section, of the ends, arranged according to the invention, of two tubes before they are fitted together, in the case of a first advantageous variant embodiment.

FIG. 6*a* and FIG. 6*b* are partial views, in the direction of arrows F, of the arrangements shown in FIGS. 5*a* and 5*b*.

FIG. 7 is a view similar to FIGS. 5*a* and 5*b* after the tubes have been fitted together.

FIG. 8 is a partial view of the locking device, in the direction of arrow Fl of FIG. 7.

FIG. 9*a* and FIG. 9*b* are partial views in axial section of the ends, arranged according to the invention, of two

tubes before they are fitted together, in the case of the second advantageous variant embodiment.

FIG. **10***a* and FIG. **10***b* are partial views, in the direction of arrows F', of the arrangements shown in FIGS. **9***a* and **9***b*.

FIG. **11** is a view similar to FIGS. **9***a* and **9***b* after the have been fitted together.

FIG. **12** is a partial view of the locking device in the direction of arrow F_1' of FIG. **11**.

FIG. **13** is a view in detail of the bridge supporting the flexible pad, in the case of a first variant embodiment with respect to FIG. **9***b*.

FIG. **14** is a view in detail of the bridge supporting the flexible tab, in the case of a second variant embodiment with respect to FIG. **9***b*.

FIG. **15** is a view in the direction of arrow F_2 of FIG. **14**.

FIG. **16** is a view of the bridge shown in FIG. **14**, after the two tubes have been fitted together.

If reference is firstly made to FIGS. **1** to **4**, an inner tube **1** is seen, designed to be fitted in an outer tube **2** in order to constitute an assembly of two coaxial tubes. The inner diameter of tube **2** is substantially equal to the outer diameter of tube **1**. The walls of these two tubes have been shown with a relatively large thickness in order to facilitate the explanations of the arrangements provided at their opposite ends, but it is obvious, as will be emphasized hereinafter, that the invention imposes no particular requirement in this respect.

On the outer face **1***a* of the tube **1** are disposed a boss **3** and a protuberance **4**, for example diametrically opposite boss **3**.

Boss **3** presents a form generally elongated in the axial direction of tube **1** and its lateral faces **3***a* and **3***b* are parallel to the axis of the tube and project by a height h with respect to the outer surface **1***a*. Protuberance **4**, generally of dimensions smaller than boss **3**, may present a substantially square shape at least one of its axial ends **4***a* and **4***b* and in particular end **4***a* most remote from end **1***b* of the tube, being located in a transverse plane of tube **1**, so as to constitute a transverse shoulder.

It will be noted that area **4***b* of protuberance **4** axially closest to end **1***a* of the tube, is, however, more remote from this end than the corresponding area **3***c* of boss **3**. The reasons for this arrangement will appear hereinbelow.

On the inner face of the outer tube **2** is arranged a groove **5** whose lateral edges **5***a* and **5***b* are parallel to the axis of the tube and are spaced from each other by a distance e substantially equal to that separating the opposite lateral faces **3***a* and **3***b* of boss **3**. The depth of the groove is at least equal to the radial projection h of the lateral faces **3***a* and **3***b*.

Groove **5** opens out at the end **2***a* of tube **2** and its axial length is preferably at least equal to that of boss **3**. It is determined by a terminal face **5***c* whose position will be specified hereinafter.

Diametrically opposite groove **5** and housed in a recess **6** in the wall of tube **2**, is located a longitudinal tab **7**. In the free state and as shown in FIG. **1***b*, the inner face of tab **7** coincides substantially with the inner cylindrical surface of the wall of tube **2**.

Tab **7** is fixed, in the vicinity of its inner end **7***a*, to the wall of tube **2** and its outer end **7***b* is located substantially in the transverse plane of the end **2***a* of tube **2**, preferably inside the tube. The shape of tab **7** and/or its means for fixing to the wall of the tube render it elastically flexible or mobile, about a transverse axis located in the vicinity of its inner end **7***a*, inside recess **6**.

In the vicinity of its outer end **7***b*, tab **7** presents a housing **8**, for example of shape substantially identical to that of protuberance **4**. It will be emphasized here that housing **8** may be constituted by a hole passing through the thickness of the tab. In the example shown, the depth of housing **8** is substantially equal to the radial projection of protuberance **4** with respect to the outer surface **1***a* of the tube **1**. At least one of the longitudinal ends **8***a* and **8***b* of the housing **8**, particularly end **8***a* close to end **7***b* of tab **7**, is located in a transverse plane of tube **1**, perpendicular to its inner surface. The axial distance between the two ends **8***a* and **8***b* is preferably substantially equal to that which separates the two axial ends **4***a* and **4***b* of protuberance **4**.

The man skilled in the art will already have understood the functioning of the locking device which has just been described. The free end lb is firstly fitted in the free end **2***a*, whatever the relative orientation of boss **3** and protuberance **4**, groove **5** and tab **7**.

When boss **3** comes into abutment on the end of tube **2**, the movement of fit can be continued only after boss **3** and the terminal opening of groove **5** have been brought into register. The relative orientation of the outer tube and of the inner tube is then set and protuberance **4** is necessarily in line with tab **7**.

The movement of fit continues, the lateral faces **3***a* and **3***b* of the boss being guided by the lateral edges **5***a* and **5***b* of the groove. End **7***b* of tab **7** is raised by protuberance **4** and tab **7**, in its entirety, is elastically pushed into recess **6**. When protuberance **4** lies opposite housing **8**, tab **7** returns into its initial position, housing **8** covering and imprisoning this protuberance. If, as has been indicated above, the axial ends **4***a* and **4***b* of protuberance **8***a* and **8***b* of the housing are perpendicular to the outer or inner surfaces of the tubes, they constitute complementary areas of axial abutment, ensuring axial immobilization of the two tubes with respect to each other, both in the sense of fit and in that of disconnection.

However, it might be imagined :hat only the axial ends **4***a* and **8***a* be shaped so as to constitute complementary areas of axial abutment, ensuring immobilization in the sense of disconnection. In that case, in order to limit the fit of the two tubes in each other, other means might be used. In particular, the length of the groove **5** might be determined so that its end **5***a* constitutes an area of axial abutment for the front longitudinal end **3***c* of boss **3**, after shoulder **4***a* has attained or even slightly passed beyond the end **8***a* of housing **8**.

Such an arrangement makes it possible to produce protuberance **4** in the form of a simple ramp for the end **7***b* of tab **7**.

If reference is now made to FIGS. **5** to **8**, an advantageous variant embodiment is seen which may be associated with a device for connecting a flexible pipe on a rigid tubular joining piece such as the one which forms the subject matter of the-patent application mentioned above. The elements already described bear the same references increased by **10**. One of the principal differences between the two embodiments is that the outer tube is constituted by a thin metal sheet which may consequently be easily cut out and possibly formed by stamping.

As shown in the Figures, the outer tube **12** is an appendix in thin sheet metal, fixed to the end of a flexible pipe under the conditions set forth in the patent applica-

tion mentioned above. It is intended to be fitted on a rigid joining piece or inner tube **11**, generally made of plastics material. On the outer surface **11***a* is found protuberance **14** which is, however, associated with two bosses **13–13'** disposed symmetrically with each other with respect to the diametral plane passing through the protuberance **14**. However, it will be noted that to the assembly of the two bosses **13–13'** there corresponds a distance e_1 between their opposite lateral faces **13***b*–**13'***a*. On the other hand, the particularity, indicated hereinabove, is found again, whereby the area **14***b* of the protuberance **14**, closest to the end **11***b* of the tube **11**, is more remote from this end than the corresponding areas **13***c* of the bosses **13**. The transverse shoulder **14***a* is substantially perpendicular to the outer surface **11***a* of the tube, whilst the opposite end **14***b* of the protuberance is preferably constituted by an inclined ramp.

The outer tube **12** presents a longitudinal groove **15** whose two lateral edges **15***a*–**15***b* are spaced apart by a distance e_1 substantially equal to that separating the opposite lateral faces **13***b*–**13'***a* of bosses **13–13'**.

Between edges **15***a*–**15***b* of the groove there extends a longitudinal tab **17** of which the free end **17***b* is slightly curved outwardly. Tab **17** is obtained by a suitable cut-out of the wall of the outer tube **12** to which it remains fixed by its end **17***a*, preferably of smaller width, which constitutes an elastic zone of fold. In the free state, and as shown in FIG. **5***b*, tab **17** is located on the periphery of tube **12**.

The longitudinal edges **17***c* of tab **17** are parallel to the edges **15***a*–**15***b* of the groove and defines with them two secondary grooves **15***d* whose width is close to that of each of the bosses **13–13'**.

Finally, tab **17** presents in its central part a hole **18** whose shape preferably corresponds to that of protuberance **14**. More precisely, the transverse edge **18***a* is perpendicular to edges **15***a*–**15***b* of the groove.

The positioning of the locking device is similar to that described hereinabove. The complete fit of tube **12** on tube **11** will obviously necessitate the correct offering of edges **15***a*–**15***b* of groove **15** in line with the opposite lateral faces **13***b*–**13'***a* of bosses **13–13'** (position shown in interrupted lines in FIG. **6***b*). To that end, and particularly in the case of an automatized fit by means of a robot, there will advantageously be provided, on an element connected to tube **12**, an appropriate indexing member designated by reference A. Continuation of the fit will firstly provoke cooperation of the guide surfaces **13***b*–**13'***a* with the lateral edges **15***a*–**15***b* of the groove, then the raising of tab **17**, by the cooperation of its end **17***b* with the ramp **14***b* of protuberance **14**. Locking is terminated when the transverse edge **18***a* of hole **18** has come into abutment behind the transverse shoulder **14***a* of protuberance **14**, tab **17** then being elastically returned to its free state (FIGS. **7** and **8**).

Immobilization in rotation of the two tubes **11** and **12** is ensured by the cooperation of edges **15***a*–**15***b* of groove **15** and the lateral faces **13***b*–**13'***a* of bosses **13–13'**, whilst axial immobilization in the sense of disconnection is obtained by the mutual abutment of edge **18***a* of hole **18** and of shoulder **14***a* of protuberance **14**.

Axial immobilization in the sense of fit may be obtained by the abutment of bosses **13–13'** on the bottom **15***c* of groove **15** or by any other suitable abutment of tube **11** on a stop connected to tube **12**, such as the one indicated at B in FIG. **7**.

If reference is now made to FIGS. **9** to **12**, a second variant embodiment is seen, similar to the one which has just been described with reference to FIGS. **5** to **8**. Like the preceding one, it will advantageously be associated with a device for connecting a flexible pipe on a rigid joining piece such as the one forming the subject matter of the patent application mentioned above. The elements already described bear the same references, again increased by **10**. In the same way as in the preceding variant, the outer tube is constituted by a thin metal sheet which may be easily cut out and stamped.

On the outer surface **21***a* of the rigid joining piece **21**, which constitutes the inner tube, there are found again two elongated bosses **23** and **23'** whose opposite lateral faces **23***b*–**23'***a* project radially and are parallel to the axis of the tube, being spaced apart from each other by a transverse distance e'_1. The longitudinal ends of these bosses are located in two transverse planes of the tube, preferably, as shown in the drawing, in the same transverse plane for each pair of corresponding ends. The ends **23***c* and **23'***c* closest to end **21***b* of the tube advantageously present the form of a ramp, whilst ends **24***a* and **24'***a* constitute shoulders projecting radially with respect to the outer surface **21***a* of the tube. Although bosses **23** and **23'** may constitute only one, they will preferably be distinct from each other, their lateral faces **23***a* and **23'***b* being separated by a short distance so as to form a longitudinal notch **21***d* of which the utility will be apparent hereinafter.

The outer tube **22** presents a longitudinal groove **25** whose longitudinal edges **25***a*–**25***b* are parallel to the axis of the tube and are spaced by a distance substantially equal to that separating the opposite lateral faces **23***b*–**23'***a* of bosses **23–23'**. As clearly shown in FIGS. **9***b* and **10***b*, edges **25***a* and **25***b* of the groove are preferably provided with small tabs **25***c* and **25***d* perpendicular to the plane of the groove and improving, as will be specified hereinbelow, the role of guiding of the edges of the groove.

A bridge **29** supporting the flexible longitudinal tab **27** is fixed to the outer tube **22** above groove **25**. This bridge, preferably made of spring steel, comprises on each of its lateral edges a fold **29***a* whose left-hand end, slightly bent, abuts (FIG. **9***b*) on a protuberance **22***a* connected to tube **22** whilst its right-hand end is simply crimped on the rearwardly folded terminal end **22***b* of the tube **22** (FIG. **10***b*).

Tab **27** is constituted by a fold of the upper face of the bridge **29** joining it by a loop **27***a*, clearly visible in section in FIG. **9***b*. It presents a width substantially larger than that of groove **25** as shown in FIG. **10**b. At its free end, located substantially in the transverse plane of the terminal edge **22***b* of the tube, tab **27** comprises a hook **27***c* folded on the upper face of bridge **29**.

Tab **27** presents two openings **28** and **28'** whose contour corresponds to that of bosses **23** and **23'**. In particular, the transverse edges **28** and **28'***a* closest to the terminal edge **22***b* of the outer tube, are preferably in the same transverse plane, whilst the opposite longitudinal edges **28***b* and **28'***b* are advantageously offset laterally with respect to the edges **25***a*–**25***b* of the groove, thus allowing passage of the tabs **25***c* and **25***d* in openings **28** and **28'**.

In the example shown, there is a metal tongue **27***d* whose width corresponds to that of notch **21***d* between the bosses **23–23'** and which participates in the mechanical strength of the terminal transverse edge of the tab **27**. However, it is obvious that, if bosses **23–23'** constitute only one, the same will apply to openings **28–28'**

In the free state, tab **27** rests on the longitudinal edges of the groove **25** and is elastically maintained thereon by the spring constituted by loop **27***a*.

The positioning of the locking device is similar to that which has been described hereinabove. After a correct offering of bosses **23–23'** opposite the opening of groove **25** (position shown in interrupted lines in FIG. **10**b), the fit of tube **21** in tube **22** firstly provokes raising of tab **27** by ramps **23***c*–**23'***c* of the bosses. The lateral faces **23***b*–**23'***a* of the latter are guided longitudinally by the edges **25***a*–**25***b* of the groove and especially by their small tabs **25***c*–**25***d*. At the end of the fit, the transverse edges **28***a*–**28'***a* of the openings of the tab **27** come into axial abutment behind the shoulders **24***a*–**24'***a* of the bosses **23–23'**, whilst tab **27** resumes the position that it occupied in the free state under the effect of its spring **27***a* (FIG. **11**).

The two tubes are then immobilized axially and in rotation, both with respect to disconnection and in the sense of fit. In this respect, the arrangements described hereinabove can be used again here.

Whatever the embodiment envisaged, it will be generally advantageous to provide means for visually and easily checking the correct locking of the two tubes, i.e. the return of the locking tab to its position in the free state, after cooperation of the openings of the tab and of the shoulder provided in register on the outer surface of the inner tube.

To that end and if reference is now made to FIG. **13**, an advantageous variant is seen of the bridge covering the groove of the outer tube and shown in FIGS. **9***b* and **10**b. The elements already described bear the same reference numerals increased again by **10**.

As has already been indicated, bridge **39** is disposed above the longitudinal groove formed in the outer tube **32** and the tab **37** is constituted by a fold connected to the bridge by the loop **37***a*. Towards the inlet of the groove, located to the right in FIG. **13**, tab **37** terminates in a hook **37***c* folded above the upper face of the bridge.

The latter presents a bevel shoulder **39***a* whose depth corresponds substantially to the thickness of the metal sheet and whose width (in the direction perpendicular to the Figure) is advantageously close to that of the hook **37***c*. The latter presents a fold **37***d* whose plane is parallel to that of the tab **37**.

In the course of fit of the tubes, boss **33** raises tab **37** and its fold **37***d* projects above the upper face of the bridge **39** (position in interrupted lines). After having been guided by the longitudinal edge **35***a* of the groove, boss **33** comes opposite opening **38** of tab **37**. Under the effect of its spring **37***a*, tab **37** resumes the position shown in solid lines in the Figure, which ensures locking.

If for any reason fit of the tubes is not sufficient to provoke locking thereof, tab **37** and its fold **37***d* are maintained in the position shown in interrupted lines, which will easily be registered by the operator by a simple visual check.

Finally, if reference is made to FIGS. **14** to **16**, another variant is seen of the means for visually checking locking. The elements already described and shown in FIGS. **9***b* and **10***b* bear the same references increased by **20**.

Bridge **49** disposed above the groove of the outer tube **42** supports tab **47** via loop **47***a* forming spring. However, it will be noted that tab **47** presents a shoulder **47***b* whose utility will be apparent hereinafter, whilst its terminal hook **47***c* is located this side of the terminal edge **49***c* of bridge **49**.

A staple **51** made of elastic material, preferably of spring steel, is constituted by a sheet folded in U-form surrounding bridge **49** and its tab **47**. The web of the U is located in the area of loop **47***a* and presents a recess **51***a*, clearly visible in FIG. **15**, allowing passage of loop **47***a*.

The lower arm **51***b* of the staple is located below tab **47** and extends this side of the shoulder **47***b* of the tab. The upper arm **51***c* of the staple extends above the upper face of bridge **49**. In its central part, this upper arm **51***c* is capable of being in engagement (FIGS. **14** and **15**) with the terminal fold **47***e* of the hook **47***c* of tab **47**, whilst, on either side of this central part, it extends by hooks **51***d* directed towards the lower arm **51***b*.

Thus, staple **51** which has just been described constitutes a member mounted to slide axially with respect to bridge **49** and to its tab **47** and capable of being in engagement with an element of the latter. Moreover, for reasons which will be specified hereinafter, it should be noted here that, in the free state (not shown), arms **51***b*–**51***c* of staple **51** are slightly divergent, so that they undergo an elastic deformation when they are disposed parallel to each other (FIG. **14**). Staple **51** also constitutes a spring which tends to move the ends of its arms **51***b* and **51***c* apart from each other.

However, as shown in FIG. **15**, the lower arm **51***b* of the staple presents a terminal edge **51***a* comprising, below the openings **48–48'** of tab **47**, two longitudinal projections **51***f* and **51***g*, closer to the end of the outer tube **42** then the rest of edge **5***e* is.

Before fit of tubes **41** and **42**, staple **51** is in the position shown in FIG. **14**, and the terminal central part of its upper arm **51***c* abuts beneath the terminal fold **47***e* of tab **47**. The latter is therefore raised, against the spring constituted by its loop **47***a*, above the groove **45**, whilst the upper arm **51***c* of the staple is applied on the upper face of bridge **49** and the spring constituted by the staple itself is compressed.

When bosses **43–43'** are engaged in groove **45**, they raise tab **47** further, if necessary, and their frontal face **43***c*–**43'***c* comes into contact with the projections **51***f*–**51***g* of the lower arm **51***b* of staple **51**. The tubes continuing to be fitted, the bosses cause the lower arm **51***b* to slide in the direction of arrow f up to the position shown in FIG. **16**. The terminal central part of the upper arm **51***c* then leaves its abutment beneath fold **47***e*, which releases tab **47** which therefore occupies its position of locking of tube **41** under the conditions already described.

Simultaneously, the upper arm **51***c* of the staple slackens elastically, taking a divergent position with respect to the lower arm **51***b*. Nonetheless, this movement remains limited thanks to the presence of the lateral hooks **51***d* which come into abutment beneath bridge **49**. This position of staple **51** allows easy visual check of the locking by the operator.

In addition, to the same end, a coloured mark may be provided on the terminal central part of the upper arm **51***c* of the staple, in the area capable of being covered by the terminal fold **47***e* of tab **47**. This mark therefore becomes visible only after tab **47** has arrived in its position of locking.

The variant which has just been described presents an important additional advantage with respect to the one shown in FIG. **13**.

In fact, manufacturing defects of the bosses provided in the inner tube **41** may in fact be made, particularly if the latter is made of moulded plastics material. In that case it is important that fit of the tubes cannot be continued to its terminal phase and that the operator's attention be rapidly drawn to such defect.

If it is assumed, for example, that boss(es) **43–43'** do(es) not exist, the simultaneous abutment of the frontal faces **43***c*–**43'***c* on projections **51***f*–**51***g* will not be produced. In that case, staple **51** will not normally slide, in the manner described hereinabove, which will prevent the terminal central part of the arm **51***c* from being released from the terminal fold **47***e*. The operator will therefore be immediately warned of the anomaly by a simple visual check.

Moreover, if only one of projections **51***f*–**51***g* is attained by the boss(es), staple **51** will pivot instead of sliding, again preventing the disengagement of elements **51***c* and **47***e* and consequently drawing the operator's attention.

As the man skilled in the art will have realized, the arrangements proposed by the invention may be produced in very economical manner despite the large number of advantages that they procure. In particular, safe assembly and functioning will be especially useful and appreciated in the case of the inner and outer tubes being fitted together by automatized apparatus.

We claim:

1. A coupling device for providing a separable connection between and end of a first tubular member and an end of a corresponding second tubular member, said coupling device comprising:

a) a tubular assembly mounted on the end of the first tubular member, said assembly including a circumferential wall extending longitudinally from the first tubular member, the wall having a longitudinal groove formed at an outer end of the wall;

b) at least one boss located on an outer surface of the second tubular member and projecting radially therefrom.

c) a locking tab member affixed to said tubular assembly and extending longitudinally from the first tubular member such that said locking tab member is located adjacent the groove on the outer surface of the circumferential wall, said locking tab member being elastically flexible in the radial direction and including an aperture for receiving each boss on the outer surface of the second tubular member, whereby the second tubular member may be inserted into said tubular assembly when the boss on the second tubular member is aligned in the groove such that said locking tab member will, upon insertion of the second tubular member into the tubular assembly, extend radially outward until the boss is received by the aperture in said locking tab member to separably lock the second tubular member to the first tubular member.

2. The coupling device defined in claim **1** wherein said locking tab member includes an elastically flexible locking tab with aperture adjacent the groove on the outer surface of the circumferential wall, the locking tab being connected by an integrally formed spring end loop to a support bridge surface generally parallel to and spaced apart from the locking tab, the locking tab and the support bridge surface each having a free end at the outer end of the circumferential wall.

3. The coupling device defined in claim **2** wherein the locking tab, spring end loop, and support bridge surface ar integrally formed form a piece of spring steel.

4. The coupling device defined in claim **2** wherein the support bridge surface includes a pair of lateral edges for securing the locking tab member to the circumferential wall of said tubular assembly.

5. The coupling device defined in claim **2** wherein said locking tab is elastically flexible in the radial direction such that the locking tab will be radially flexed by said boss on the second tubular member to indicate an unlocked position when the second tubular member is inserted into said tubular assembly and the locking tab will return to an unflexed-locked position when said boss is received by the aperture in said locking tab whereby the locked-unlocked status of the coupling device may be visually determined by observing the position of the locking tab.

6. The coupling device defined in claim **5** wherein the locking tab includes a hook formed on the free end of the locking tab, an outer end of the hook extending beyond an outer surface of the support bridge surface.

7. The coupling device defined in claim **6** wherein the support bridge surface includes a recess formed in the outer surface of the support bridge surface at the free end for receiving the outer end of the hook, whereby, upon insertion of the second tubular element into the tubular assembly, the hook is located in said recess when the coupling device is locked, and the hook extends from the recess in a visually distinguishable position when the coupling device is unlocked.

8. The coupling device defined in claim **6** including a O-shaped stable member slidably positioned about said locking tab member, said staple member being aligned axially and having a lower arm for slidably engaging said boss when said boss is inserted into the groove and an upper arm for engaging the hook on the locking tab, whereby the upper arm retains the locking tab in an unlocked position prior to the coupling of the first and second tubular members, and said boss causes the staple member to slide in an axial direction upon insertion of the second tubular member into the tubular assembly, which disengages the upper arm from the hook on the locking tab and permits the locking tab to change to a locked position only after the second tubular member has been fully inserted and said boss is positioned in the aperture of the locking tab.

9. The coupling device defined in claim **8** wherein the upper arm of said U-shaped staple member includes a visible marking on an outer end of the upper arm whereby the marking is covered by the hook of the locking tab when the locking tab is in an unlocked position, and the marking is uncovered and visible when the staple member is slidably engaged by said boss and the locking tab moves to a locked position.

10. The coupling device defined in claim **1** wherein the locking tab member includes two apertures separated by a longitudinal tongue, and the second tubular member includes two spaced apart bosses, the two bosses being sized and positioned for insertion into the apertures of the locking tab member.

11. The coupling device defined in claim **1** wherein said tubular assembly is made from sheet metal.

* * * * *