Consommation et Affaires commerciales Canada
Consumer and Corporate Affairs Canada

Bureau des brevets
Patent Office

Ottawa, Canada
K1A 0C9

(11) (C) **1,320,235**

(21) 535,857

(22) 1987/04/28

(45) 1993/07/13

(52) 285-47

(51) INTL.CL.[5] F16L-37/12

(19) (CA) **CANADIAN PATENT** (12)

(54) Quick Connect Pipe Coupling

(72) Kimber, Edward G. , Canada

(73) Tridon Limited , Canada

(57) 40 Claims

Canada

CCA 3254 (10-92) 41 7530-21-936-3254

535857

ABSTRACT

There is described a pipe coupling for use in forming a sealed connection between two conduits which comprises a tubular male fitting defining an external conical portion and a tubular female fitting adapted to fix snugly about the male fitting and including a complementary internal conical portion. A seal is seated in one of the conical portions for engagement with the other of the portions to seal the male and female fittings. Axially oriented guide means are provided to allow relative angular location of the male and female fittings and to permit relative axial movement of the fittings and locking means are coupled to the male and female fittings for locating the fittings axially with respect to one another on assembly.

This invention relates to a pipe coupling for use in forming a sealed connection between two conduits. The invention has particular application in the coupling of hoses to the radiators of automobiles and this application will be described as exemplary of many uses for the invention.

At present, the coupling of a hose to a radiator is typically achieved by clamping the end of the hose over a short tube having a raised bead at its end to enhance the sealing action. The clamp used to tighten the hose on the tube is commonly a steel band having a screw device to tighten the band on the hose.

The hose is normally an interference fit over the tube and so an operator connecting hoses to radiators on, for example, an automobile assembly line may experience difficulties when engaging the hose over the tube, especially if the parts are anything other than clean or access to the parts is restricted. Once this is done, the clamp, which was put over the hose before engagement in the tube, is located around the hose, just behind the bead on the tube. The clamp is then tightened by turning the screw with a tool such as a screw driver. Again, an operator may experience difficulties when locating and tightening the clamp in the restricted space of the engine compartment in the limited time available to him to complete the operation as the automobile on the assembly line passes through his work station.

As there is no visual indication of whether the clamp is correctly located and tightened, other than obvious misalignment or looseness, the presence of an incorrectly fitted

Fluidmaster, Inc. - EX1020, Page 003
IPR2024-00635 (Fluidmaster Inc v. Danco Inc)

clamp does not become apparent until the automobile is fully assembled and the engine cooling system has been filled with cooling fluid and the engine run for a period of time to build up pressure in the system. This is particularly important on an assembly line where an incorrectly fitting clamp may not be detected until the engine is tested, or even in some instances until after the automobile has been in use for some time resulting in a customer warranty claim. Consequently, the assembly line must accommodate stations to check and tighten hose clamps.

In addition to the problems outlined above, this conventional form of coupling is unsuited for fitting in fully automated automobile assembly lines due to the number and intricacy of the steps involved in the assembly of the hoses and clamps. It is, therefore, an object of the present invention to provide a pipe coupling which can be connected with a minimum of operational steps which are of a nature to permit the use of robots or the like to connect the coupling. Further objects of the invention include providing a coupling which can be quickly and easily disconnected and providing means to indicate whether the coupling has been made correctly.

Accordingly, in one of its aspects, the present invention provides a pipe coupling comprising a tubular male fitting defining an external conical portion and a tubular female fitting adapted to fit snugly about the male fitting and including a complementary internal conical portion. A seal is seated in one of the conical portions for engagement with the other of the portions to seal the male and female fittings.

Fluidmaster, Inc. - EX1020, Page 004
IPR2024-00635 (Fluidmaster Inc v. Danco Inc)

Axially oriented guide means are provided to allow relative angular location of the male and female fittings and to permit relative axial movement of the fittings and locking means are coupled to the male and female fittings for locating the fittings axially with respect to one another on assembly.

According to another aspect of the invention, a pipe coupling is provided having tubular male and female fittings adapted to fit together snugly, a seal seated in one of the fittings to seal the fittings after assembly, the fittings defining locking means including at least two curved resilient arms extending circumferentially from one of the fittings, the arms having end portions defining engagement means cooperable with receiving apertures in the other of these fittings to engage the apertures and retain the fittings in axial relationship with the seal in engagement with both fittings to seal the fittings.

A preferred embodiment of the present invention will now be described, by way of example, with reference to the accompanying drawings, in which:

Fig. 1 is a broken away perspective view of a typical automobile radiator and hose provided with a pipe coupling in accordance with the present invention, the pipe coupling having a male fitting and a female fitting, and the fittings being shown separated and aligned ready for engagement;

Fig. 2 is a perspective view of the male and female fittings of the coupling of Fig. 1, the male fitting being shown rotated through 90 degrees from the engagement alignment to illustrate more details of the male fitting;

Fluidmaster, Inc. - EX1020, Page 005
IPR2024-00635 (Fluidmaster Inc v. Danco Inc)

Fig. 3 is an end view of the male fitting of Fig. 1 looking from the end exposed in Fig. 2;

Fig. 4 is a sectional side view on a diameter of the male and female fittings after assembly and taken generally on line 4-4 of Fig. 1; and

Fig. 5 is an enlarged view of a portion of Fig. 4 showing a seal ring in the male fitting and engaged with the female fitting.

Referring initially to Fig. 1 of the drawings, a pipe coupling, indicated generally by reference numeral 20, extends about a longitudinal axis and comprises two mouldings, typically of synthetic plastics material and preferably of glass filled nylon, in the form of a tubular male fitting 22 and a tubular female fitting 24. The male fitting 22 is connected permanently to the end of a flexible rubber hose 26 using any suitable device and the female fitting is formed as part of a moulded header 28 of an automobile radiator 30. Together the fittings define a locking structure so that with proper alignment, the male and female fittings can be snapped together to form a liquid seal and structure is provided to permit the fittings to be separated.

Reference is next made to Fig. 2 which shows the fittings 22 and 24 in more detail. The male fitting 22, which has a fluid passage 32 therethrough, comprises a hose connection tube 34, an intermediate portion 36, and a leading end portion 38.

The hose connection tube 34 is cylindrical and has a raised bead 40 at its free end to form an interference fit with

Fluidmaster, Inc. - EX1020, Page 006
IPR2024-00635 (Fluidmaster Inc v. Danco Inc)

the hose 26 (Fig. 1) and to help retain a crimped wedding band clamp 42 which holds the hose 26 firmly on the tube 34.

The intermediate portion 36 is of greater diameter than the hose connection tube 34 and is provided with two diametrically opposed resilient arms 44, 46 which are dependent from the intermediate portion at diametrically opposed points and which extend part circumferentially around and radially spaced from the portion 36 (Fig. 3). On the outer end of each arm 44, 46 there is provided a raised substantially rectangular projection 48 having a grooved outer face 49. Adjacent each projection 48 on the arms 44, 46, there is also provided a detent projection 50, which has a tapered leading edge 52 and a rearwardly facing abutment face 54.

The arms 44, 46 extend from raised bosses 56 which define respective ones of a pair of guide slots 58. The leading ends of the guide slots 58 are widened to provide a flared lead in portion 62. Each of the bosses is provided with a raised longitudinally extending abutment 64 to locate the intermediate portion 36 centrally as it is moved axially into the female fitting 24.

The fitting 22 tapers between the portion 36 and leading end portion 38 at a 25 degree angle to the axis of the fitting to form a truncated cone shaped portion 66, the outer surface of which defines a seating for a seal. This seating is in the form of a circumferential groove in which the seal sits as will be seen in Fig. 5. The seal is indicated in Fig. 5 as 69 and the groove as 68 and is in the form of a lip of resilient material, preferably E.P.D.M., having a mounting portion 69a

Fluidmaster, Inc. - EX1020, Page 007
IPR2024-00635 (Fluidmaster Inc v. Danco Inc)

which is located in the groove 68 and a tapered portion 69b which extends from the groove 68.

The leading end portion 38 of the male fitting 22 is cylindrical and is shaped to be received by an inner receiving portion 70 of the female fitting 24 to stabilize the assembly and prevent misalignment. The inner receiving portion 70 is joined to the radiator header 28 and has a fluid passage 71 in communication therewith. The inner portion 70 extends inwardly from a flared portion 72, the inner face 73 of which is complementary to that of the conical portion 66 of the male fitting 22 (see also Fig. 5). The inner face 73 has a machined finish to avoid a mould parting line which would possibly interfere with the ability of the lip 69 to seal against the face 73.

A mouth portion 74 of the female fitting 24 leads to the flared portion 72 and receives the intermediate portion 36 of the male fitting 22. For this purpose the mouth portion 74 is provided with two diametrically opposed open ended axial slots 76 for receiving the end projections 48 on the arms 44, 46 and is further provided with two rectangular apertures 78 near the respective slots 74 for receiving the detent projections 50 on the arms 44, 46. The engagement of the male fitting into the female fitting requires angular positioning to ensure that the parts meet correctly. This is achieved by two diametrically opposed keying members 80 raised inside the mouth portion 74 for location of the guide slots 58 in the male fitting 22. The lead in portion 62 of slots 58 facilitate alignment.

Fluidmaster, Inc. - EX1020, Page 008
IPR2024-00635 (Fluidmaster Inc v. Danco Inc)

The male fitting 22 is engaged in the female fitting 24, simply by moving the male fitting into the female fitting with the members 80 and slots 58 aligned. The tapered leading edges 52 of the detent projections 50 will contact the outer edge of the mouth portion 74 as the fittings 22, 24 are brought together and these tapers will cause the arms 44, 46 to be deflected radially inwards. The movement continues until the detent projections 50 occupy the apertures 78 at which point the arms 44, 46 spring outwards and the fittings are fully engaged. The abutment faces 54 of the projections now bear against the outer or opposing face of the aperture wall to locate the fittings axially and to prevent separation of the fittings 22, 24 (Fig. 4) so that the seal 69 is in firm engagement with the inner face 73. It is an advantage of the structure that the movement of the detent projections 50 into the apertures 78 causes an audible click which serves to indicate that the coupling has been made and that a predetermined axial load has been applied to the seal.

The seal between the fittings 22, 24 is achieved between the inner face 73 of the flared portion 72 and the lip seal 69. The location of the lip seal 69 on the conical portion 66 allows the operator to visually inspect the condition of the seal 69 before engagement of the fittings 22, 24 while protecting the seal 69 from damage during handling and shipping. Also, as the seal 69 does not contact the inner surface 73 of the flared portion 72 until just before the fittings 22, 24 are locked together the seal 69 does not wipe along any appreciable length of surface while the fittings 22,

Fluidmaster, Inc. - EX1020, Page 009
IPR2024-00635 (Fluidmaster Inc v. Danco Inc)

24 are being pushed together and the likelihood of damage to the seal 69, or of the seal 69 being rolled out of the slot 68 during this operation, is minimized. Most importantly, the location and form of the seal 69 compensates for necessary manufacturing tolerances which prevent the perfect mating of the inner face 73 of the female fitting 24 and the conical portion 66 of the male fitting 22.

When the fluid pressure inside the automobile cooling system, and thus also the fittings 22, 24, rises, the seal 69 inflates and is pushed into contact with the inner face 73 of the flared portion 72. If there is a negative pressure within the system as may occur when the fluid in the system cools, the resilience of the seal 69 is sufficient to maintain sealing contact with the face 73 and prevent air being drawn into the cooling system through the fittings 22, 24.

The effect of vibration on the effectiveness of the seal is limited by locating the seal at the mid-point of the relatively long (50 mm) engaging surfaces between the male and female fitting 22, 24. Minor vibrations between the fittings 22, 24 will occur because of the moulding tolerances needed for ease of assembly.

The configuration of the fittings 22, 24 makes them suitable for use on an automated assembly line and, if required, locations can be integrally moulded on the exteriors of fittings 22, 24 to allow them to be held by robotic arms. A single axial movement is sufficient to engage the fittings, the tapered leading edges 52 of the detent projections 50 serving to push the arms 44, 46 inwardly to permit coupling. The provision of a

Fluidmaster, Inc. - EX1020, Page 010
IPR2024-00635 (Fluidmaster Inc v. Danco Inc)

lead-in portion 62 to the guide slot 58 allows fittings 22, 24 to be coupled when initially misaligned by as much as 12 degrees. If the misalignment is greater than 12 degrees the fittings 22, 24 will not engage.

In the pipe coupling shown in the drawings the keying members 80 and the guide slots 58 are diametrically opposed on their respective fittings 22 and 24. As the slots 76 and the end projections 48 on the arms 44, 46 are similarly opposed the fittings 22, 24 may be engaged in two different orientations spaced 180 degrees apart. In certain situations it may be desired that the fittings may only engage in one relative orientation in which case the guide slots 58 and the keying members 80 are located asymmetrically on the respective fittings 22, 24.

At an inspection point on such an assembly line uncoupled fittings are easily detected and if an incorrectly coupled fitting should pass an inspection the coupling will fail when the cooling system is filled with cooling fluid due to the minimal internal pressure which would be sufficient to separate the coupling.

When later maintenance of the automobile cooling system requires the coupling to be disengaged, this may be easily achieved, once the system is de-pressurised, by pressing on the projections 48 to disengage the detent projections 50 from the apertures 78 and pulling the fittings 22, 24 apart. Similarly, inspection and replacement of the lip seal 69 can be easily carried out.

Fluidmaster, Inc. - EX1020, Page 011
IPR2024-00635 (Fluidmaster Inc v. Danco Inc)

Should the hose 26 fail the wedding band clamp 42 is cut to allow the male fitting 22 to be separated from the hose 26. The fitting 22 may then be installed on a new hose and held in place with a conventional clamp. Alternatively a new hose can be supplied complete with a new fitting 22.

The coupling 20 has been described herein as being used to couple an automobile radiator to a hose. While the coupling is well suited to such application it can also be used in any number of applications where two conduits are to be joined. Structures for such purposes are within the scope of the invention as described and claimed. More particularly, the locking structure formed by the arms 44 and 46 and associated apertures 78 could be varied. For instance, the arms could be formed in the female fitting with recesses in the male fitting. Similarly, recesses could be formed in the arms with projections on the corresponding part for engagement.

Fluidmaster, Inc. - EX1020, Page 012
IPR2024-00635 (Fluidmaster Inc v. Danco Inc)

THE EMBODIMENTS OF THE INVENTION IN WHICH AN EXCLUSIVE PROPERTY OR PRIVILEGE IS CLAIMED ARE DEFINED AS FOLLOWS:

1. A pipe coupling comprising:

a tubular male fitting defining an external conical portion and disposed about a longitudinal axis;

a tubular female fitting adapted to fit snugly about the male fitting and including a complementary internal conical portion;

a seal seated in one of the external and internal conical portions for engagement with the other of the portions to seal the male and female fittings; and

axially oriented guide means to provide relative angular location of the male and female fittings and to permit relative axial movement of the fittings,

the fittings defining locking means for locating the fittings axially with respect to one another on assembly.

2. A pipe coupling as claimed in claim 1 in which a circumferential slot is provided in the external conical section for receiving the seal.

3. A pipe coupling as claimed in claim 1 in which the seal is in the form of a circumferential lip.

4. A pipe coupling as claimed in claim 1 in which the locking means include at least two curved resilient arms extending circumferentially from one of the fittings, the arms

//

having end portions defining means cooperable with complementary engagement means on the other of the fittings.

5. A pipe coupling as claimed in claim 4 in which the arms are mounted on the male fitting and the complementary engagement means are provided in the female fitting.

6. A pipe coupling as claimed in claim 4 in which the end portions of the arms define engagement means in the form of detent projections and the complementary engagement means are in the form of receiving apertures.

7. A pipe coupling as claimed in claim 6 in which each detent projection has a tapered leading edge for facilitating engagement of the fittings.

8. A pipe coupling as claimed in claim 4 in which the end of each arm further defines an outward projection having an outwardly facing bearing surface on which a force may be applied to deflect the arm to disengage the engagement means and allow separation of the fittings.

9. A pipe coupling as claimed in claim 8 in which the other of the fittings includes open-ended slots for receiving the projections when the fittings are engaged.

10. A pipe coupling as claimed in claim 1 in which the guide means include a slot in one of the fittings for receiving a complementary keying member on the other of the fittings.

11. A pipe coupling as claimed in claim 10 in which the slot has a flared lead in portion to facilitate alignment of the fittings.

12. A pipe coupling as claimed in claim 10 in which two slots and two complementary keying members are provided on the respective fittings.

13. A pipe coupling as claimed in claim 10 in which the slot is provided in an external surface of the male member and the keying member is provided on an internal surface of the female member.

14. A pipe coupling as claimed in claim 1 in which the male fitting further defines an external cylindrical portion extending forwardly from the conical portion to be received by a complementary internal cylindrical portion defined by the female fitting.

15. A pipe coupling comprising:

tubular male and female fittings disposed about a longitudinal axis and adapted to fit together snugly;

a seal seated in one of the fittings to seal the fittings after assembly;

the fittings defining locking means including at least two curved reslilient arms extending circumferentially from one of the fittings, the arms having end portions defining means

cooperable with complementary engagement means on the other of the fittings to retain the fittings in axial relationship with the seal in engagement with both fittings to seal the fittings.

16. A pipe coupling as claimed in claim 15 in which the arms are mounted on the male fitting and the complementary engagement means are provided in the female fitting.

17. A pipe coupling as claimed in claim 15 in which the end portion of the arms define engagement means in the form of detent projections and the complementary engagement means are in the form of receiving apertures.

18. A pipe coupling as claimed in claim 17 in which each detent projection has a tapered leading edge for facilitating engagement of the fittings.

19. A pipe coupling as claimed in claim 15 in which the end of each arm further defines an outward projection having an outwardly facing bearing surface on which a force may be applied to deflect the arm to disengage the engagement means and allow separation of the fittings.

20. A pipe coupling as claimed in claim 19 in which the other of the fittings includes open ended slots for receiving the projections when the fittings are engaged.

21. A pipe coupling as claimed in claim 15 in which the male fitting defines an external conical portion and the female fitting includes a complementary internal conical portion.

22. A pipe coupling as claimed in claim 21 in which the seal is seated in one of the external and internal conical portions for engagement with the other of the portions.

23. A pipe coupling as claimed in claim 21 in which a circumferential slot is provided in the external conical section for receiving the seal.

24. A pipe coupling as claimed in claim 15 in which the seal is in the form of a circumferential lip.

25. A pipe coupling as claimed in claim 15 in which axially oriented guide means are provided to provide relative angular location of the male and female fittings and to permit relative axial movement of the fittings.

26. A pipe coupling as claimed in claim 25 in which the guide means include a slot in one of the fittings for receiving a complementary keying member on the other of the fittings.

27. A pipe coupling as claimed in claim 26 in which the slot has a flared lead in portion to facilitate alignment of the fittings.

28. A pipe coupling as claimed in claim 26 in which two slots and two complementary keying members are provided on the respective fittings.

29. A pipe coupling as claimed in claim 26 in which the slot is provided in an external surface of the male member and the keying member is provided on an internal surface of the female member.

30. A pipe coupling as claimed in claim 21 in which the male fitting further defines an external cylindrical portion extending forwardly from the conical portion to be received by a complementary internal cylindrical portion defined by the female fitting.

31. A pipe coupling for use in forming a sealed connection between first and second conduits, the coupling comprising:

a male fitting for connection to the first conduit and defining a first through passage, the male fitting including a leading end portion, a retaining portion, two resilient arm members mounted on the retaining portion and extending circumferentially around and radially spaced from the retaining portion, and a detent projection on each arm;

a female fitting for connection to the second conduit and defining a second through passage, the female fitting including an internal receiving portion for intimately receiving the leading end portion of the male fitting, a mouth portion for receiving the retaining portion, and means defining detent receiving recesses in an internal surface of the mouth portion;

seal means coupled to one of the male and female fittings for engagement with the other of the fittings to form a liquid tight connection; and

the arrangement being such that when the fittings are pushed into engagement the free ends of each arm member are initially deflected radially inwardly to be received by the mouth portion, and on sealing engagement between the fittings the detent projections moving outwardly into the detent receiving recesses to prevent separation of the fittings.

32. A pipe coupling as claimed in claim 31 in which the end of each arm member defines an outward projection having an outwardly facing bearing surface on which a force may be applied to deflect the arm inwardly to disengage the detent projections from the detent receiving recesses, the mouth portion of the female fitting having an open-ended slot for receiving the projection when the fittings are coupled.

33. A pipe coupling as claimed in claim 31 in which each detent projection has a tapered leading edge for facilitating engagement of the fittings.

34. A pipe coupling as claimed in claim 31 in which the leading end portion of the male fitting includes an external conical section and the inner receiving portion of the female fitting includes a complementary internal conical section.

35. A pipe coupling as claimed in claim 34, in which the leading end portion of the male fitting further includes an external cylindrical section extending from the conical section and the inner receiving portion of the female fitting includes a complementary internal cylindrical section.

36. A pipe coupling as claimed in claim 34 in which the external conical section has a circumferential flexible lip seal provided in a slot therein.

37. A pipe coupling as claimed in claim 31 in which axially arranged interengaging guide means are provided on the fittings to facilitate alignment of the fittings.

38. A pipe coupling as claimed in claim 37 in which the guide means comprise a slot in an external surface of the retaining portion of the male fitting, and a complementary keying member on the an internal surface of the mouth portion of the female member.

39. A pipe coupling as claimed in claim 38 in which the slot in the male fitting has a flared lead-in.

40. A pipe coupling as claimed in claim 38 in which two slots and two keying members are provided on the male fitting and female fittings, respectively.

Fluidmaster, Inc. - EX1020, Page 020
IPR2024-00635 (Fluidmaster Inc v. Danco Inc)

1320235
2-1

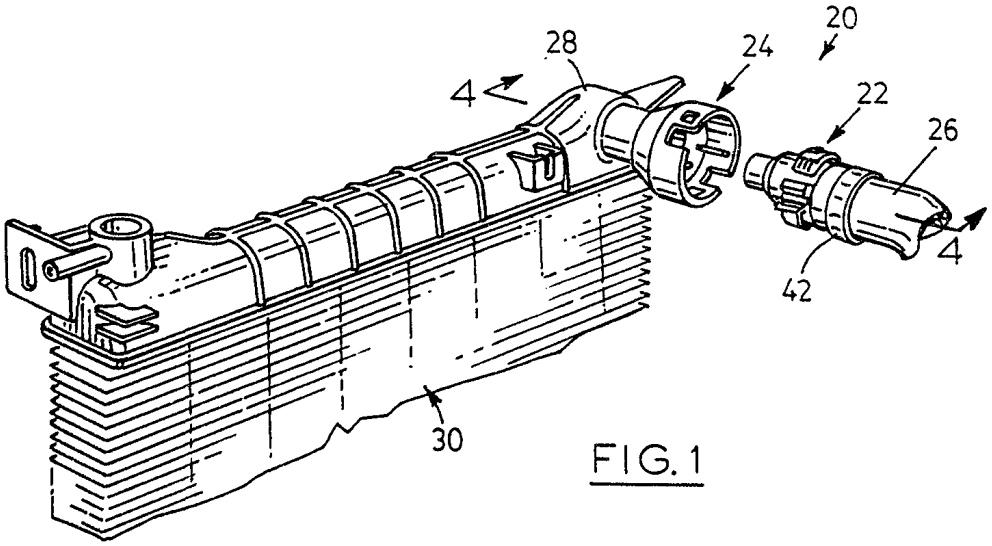

FIG. 1

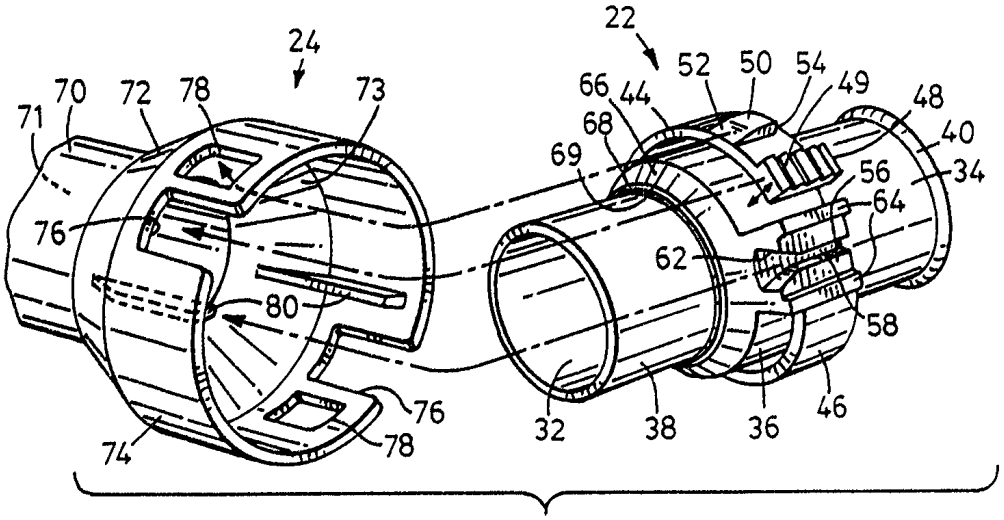

FIG. 2

Agents for the Applicant/s

1320235

2-2

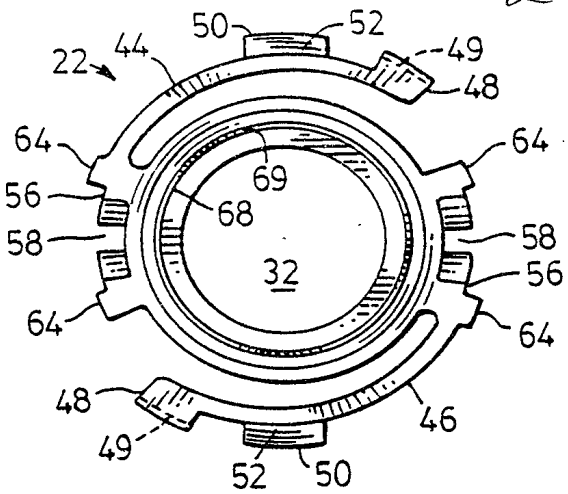

FIG. 3

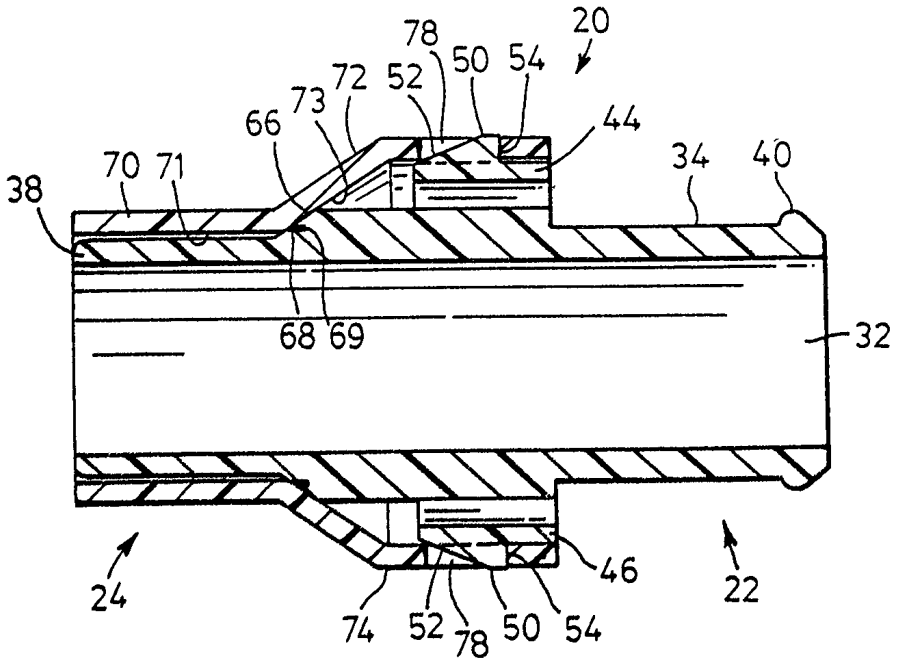

FIG. 4

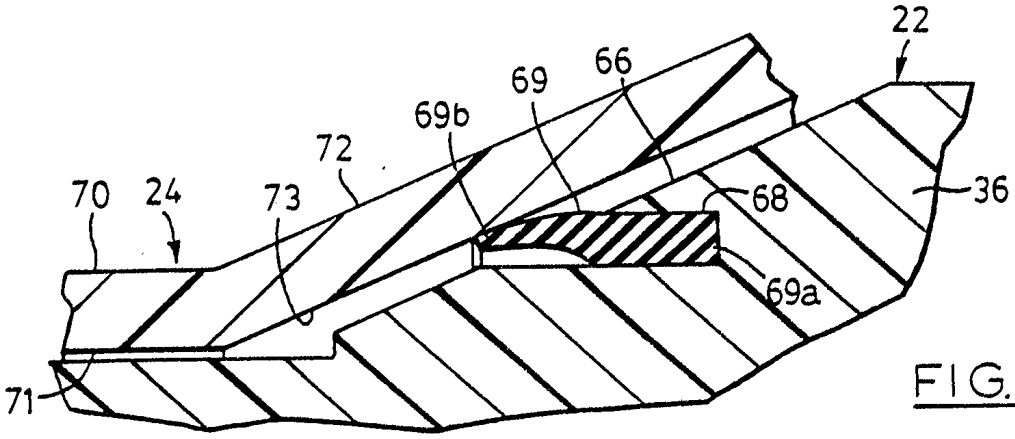

FIG. 5

Agents for the Applicants