US011064760B2

(12) **United States Patent**
Adair et al.

(10) **Patent No.: US 11,064,760 B2**
(45) **Date of Patent: *Jul. 20, 2021**

(54) **ADJUSTABLE ATHLETIC POSITIONING APPARATUS AND APPLICATIONS THEREOF**

(71) Applicant: **Athalonz, LLC**, Mesa, AZ (US)

(72) Inventors: **Michael R. Adair**, Woodruff, SC (US); **Timothy W. Markison**, Mesa, AZ (US)

(73) Assignee: **Athalonz, LLC**, Mesa, AZ (US)

(*) Notice: Subject to any disclaimer, the term of this patent is extended or adjusted under 35 U.S.C. 154(b) by 0 days.

This patent is subject to a terminal disclaimer.

(21) Appl. No.: **16/152,538**

(22) Filed: **Oct. 5, 2018**

(65) **Prior Publication Data**

US 2019/0029360 A1 Jan. 31, 2019

Related U.S. Application Data

(63) Continuation of application No. 14/159,860, filed on Jan. 21, 2014, now Pat. No. 10,092,061, which is a continuation of application No. 13/867,406, filed on Apr. 22, 2013, now Pat. No. 8,631,592, which is a continuation of application No. 13/355,778, filed on Jan. 23, 2012, now Pat. No. 8,938,893.

(60) Provisional application No. 61/450,485, filed on Mar. 8, 2011.

(51) **Int. Cl.**

A43B 7/24	(2006.01)
A43B 7/14	(2006.01)
A43B 13/14	(2006.01)

(52) **U.S. Cl.**

CPC ***A43B 7/14*** (2013.01); ***A43B 7/141*** (2013.01); ***A43B 7/142*** (2013.01); ***A43B 7/143*** (2013.01); ***A43B 7/144*** (2013.01); ***A43B 7/1445*** (2013.01); ***A43B 7/24*** (2013.01); ***A43B 13/14*** (2013.01); ***A43B 13/143*** (2013.01); ***A43B 13/148*** (2013.01)

(58) **Field of Classification Search**

CPC ... A43B 13/143; A43B 13/145; A43B 13/146; A43B 7/24

USPC 36/142–144

See application file for complete search history.

(56) **References Cited**

U.S. PATENT DOCUMENTS

4,620,376	A	11/1986	Talarico, II
4,642,911	A	2/1987	Talarico, II
4,979,318	A	12/1990	Cohen
5,345,701	A	9/1994	Smith
6,604,301	B1	8/2003	Manoli, II et al.
6,725,578	B2	4/2004	Kerrigan
7,581,336	B2	9/2009	Segalin
7,712,231	B2	5/2010	Umezawa et al.
8,127,467	B2	3/2012	Koyama
8,387,278	B2	3/2013	Rees
8,631,592	B2	1/2014	Adair et al.

(Continued)

Primary Examiner — Marie D Bays

(74) *Attorney, Agent, or Firm* — Garlick & Markison; Timothy W. Markison

(57) **ABSTRACT**

A pair of shoes that includes a left foot shoe and a right foot shoe. Each of the shoes include an upper shoe portion and a sole coupled to the upper shoe portion. The sole provides an athletic positioning of a left big toe area of the left shoe at a lower position than a left heel area of the left shoe and at a lower position than an outer small toe area of the left shoe and wherein, from an inner edge to an outer edge of the left shoe, the left heel area has substantially no slope.

11 Claims, 92 Drawing Sheets

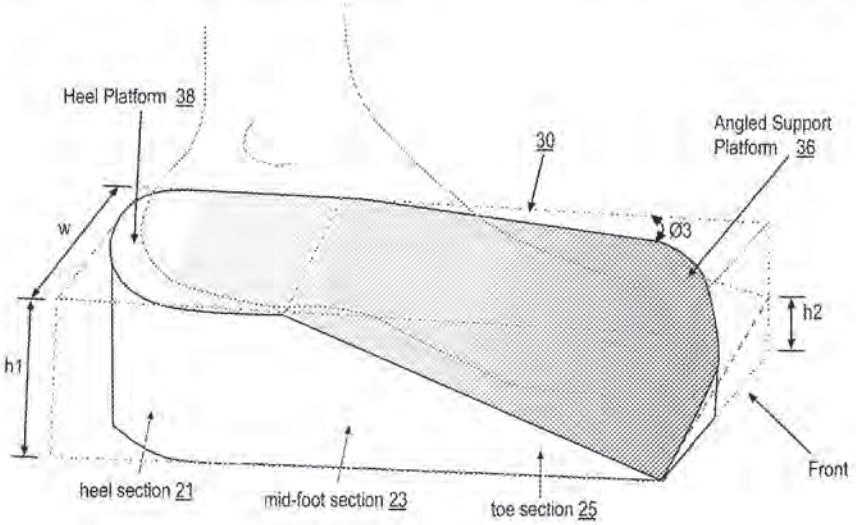

Petitioner Under Armour, Inc.
Exhibit 1001

(56) **References Cited**

U.S. PATENT DOCUMENTS

8,938,893	B2	1/2015	Adair et al.	
8,938,899	B2	1/2015	Cegnar	
10,092,061	B2 *	10/2018	Adair	A43B 13/14
2002/0139011	A1	10/2002	Kerrigan	
2006/0090377	A1	5/2006	Segalin	
2009/0199432	A1	8/2009	Park	
2009/0293307	A1	12/2009	Koyama	

* cited by examiner

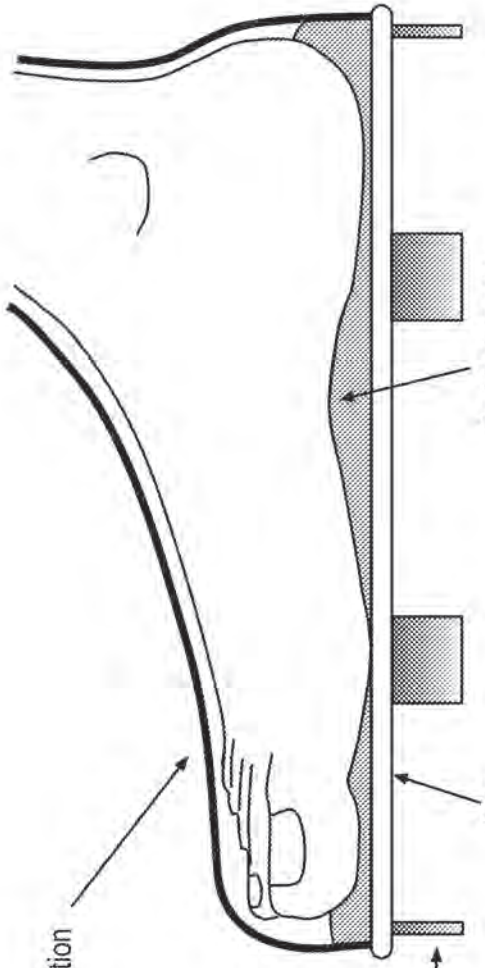

FIG. 2

Side Cross Section of Drive Leg Shoe

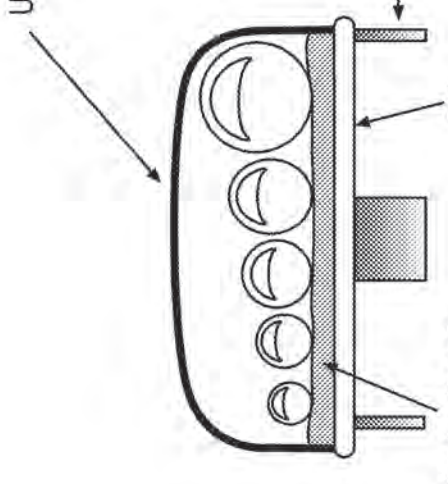

FIG. 1

Front Cross Section of Drive Leg Shoe

Prior Art

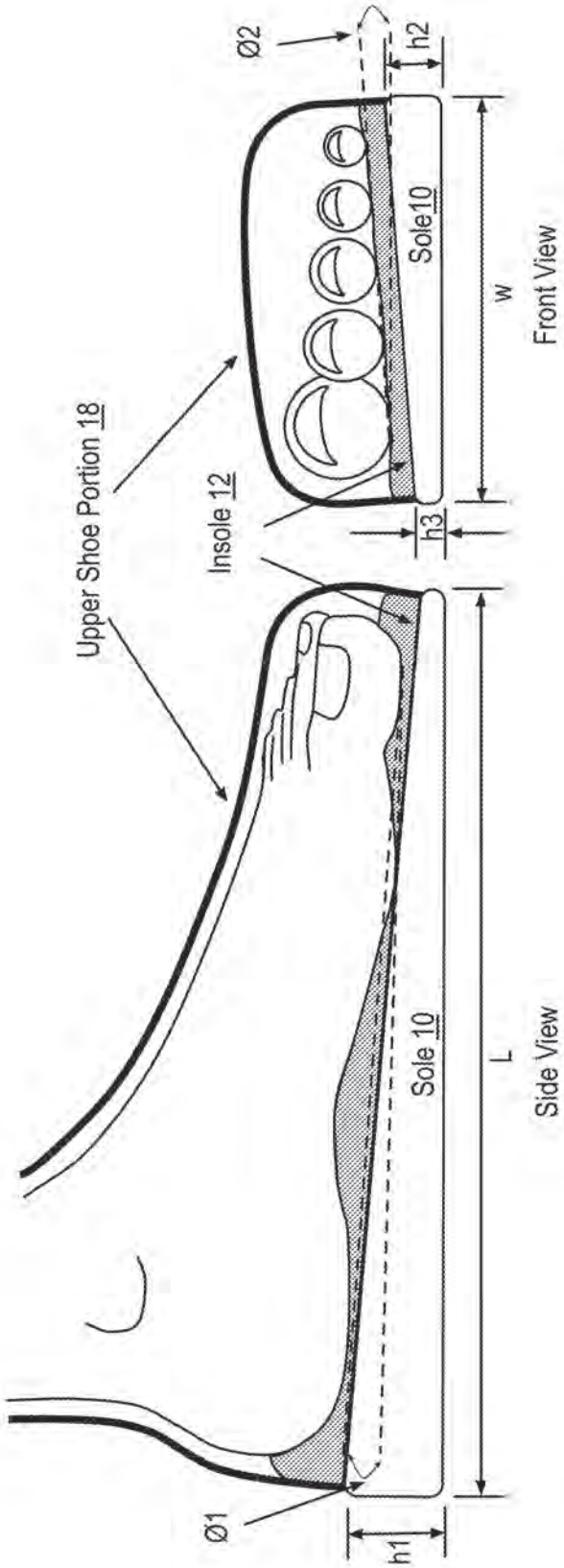
Upper Shoe Portion 18
Insole 12
Sole 10
Ø1
h1
L
Side View
Ø2
h2
h3
Sole10
w
Front View

FIG. 3

FIG. 4

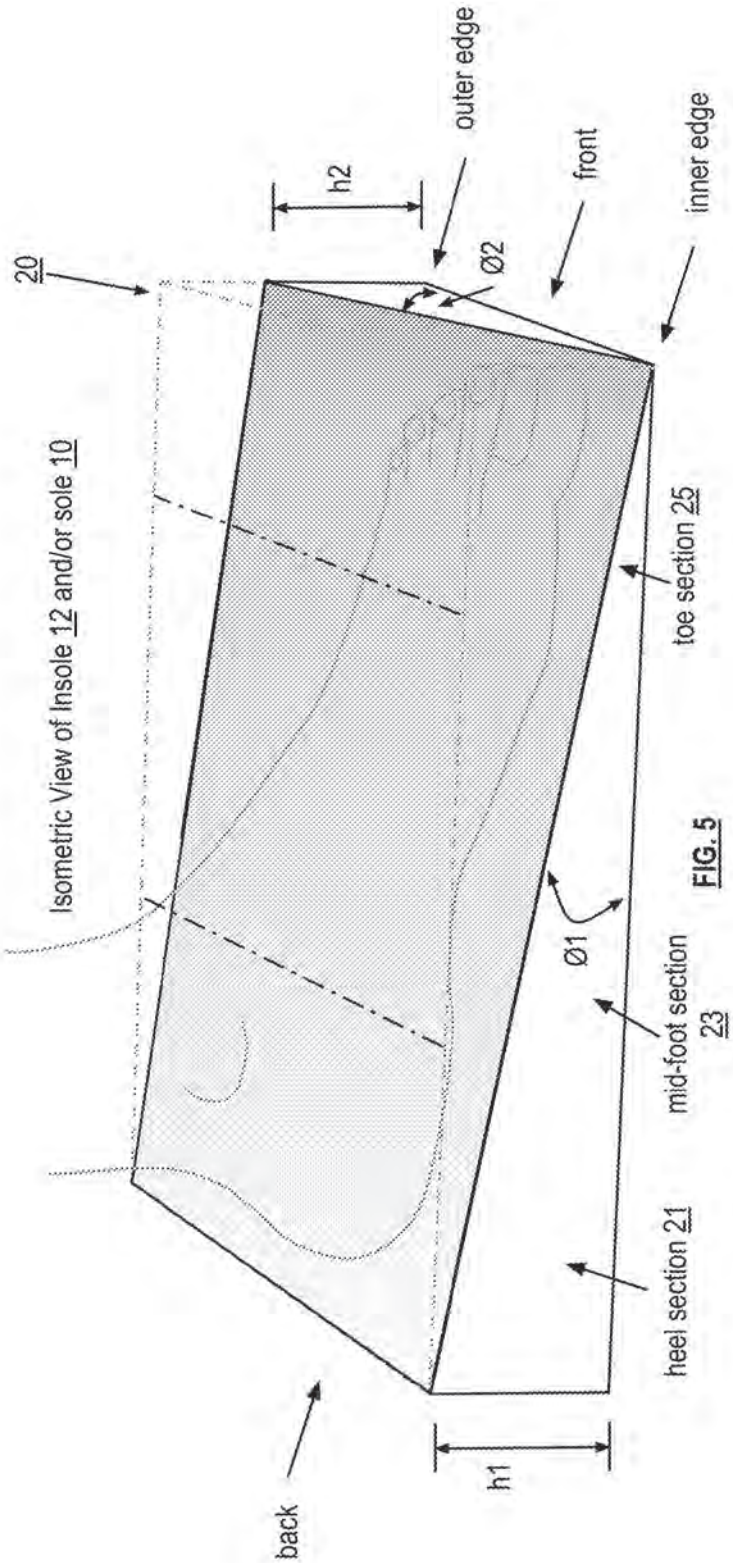

FIG. 5

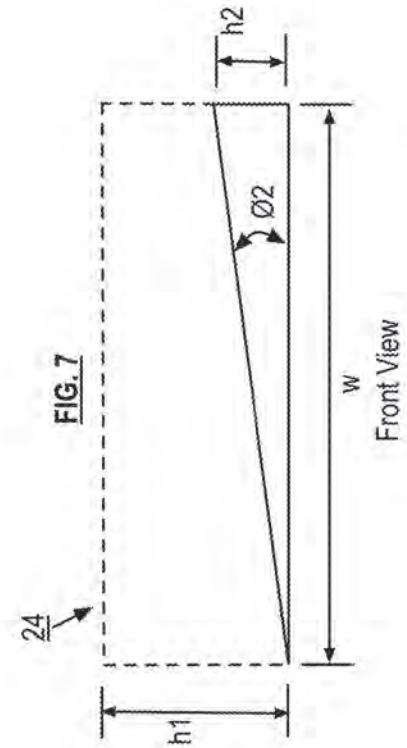

FIG. 7

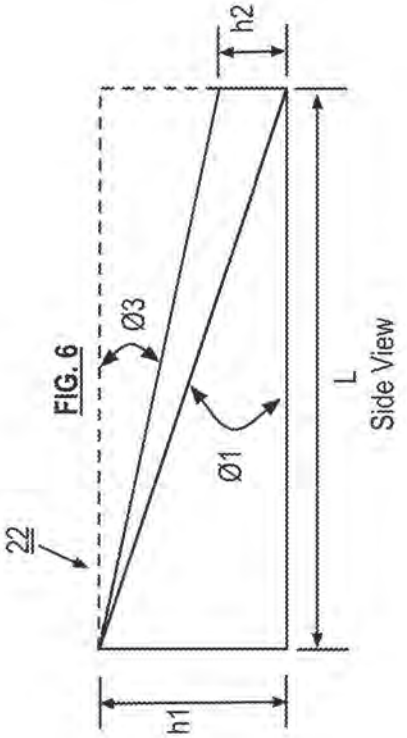

FIG. 6

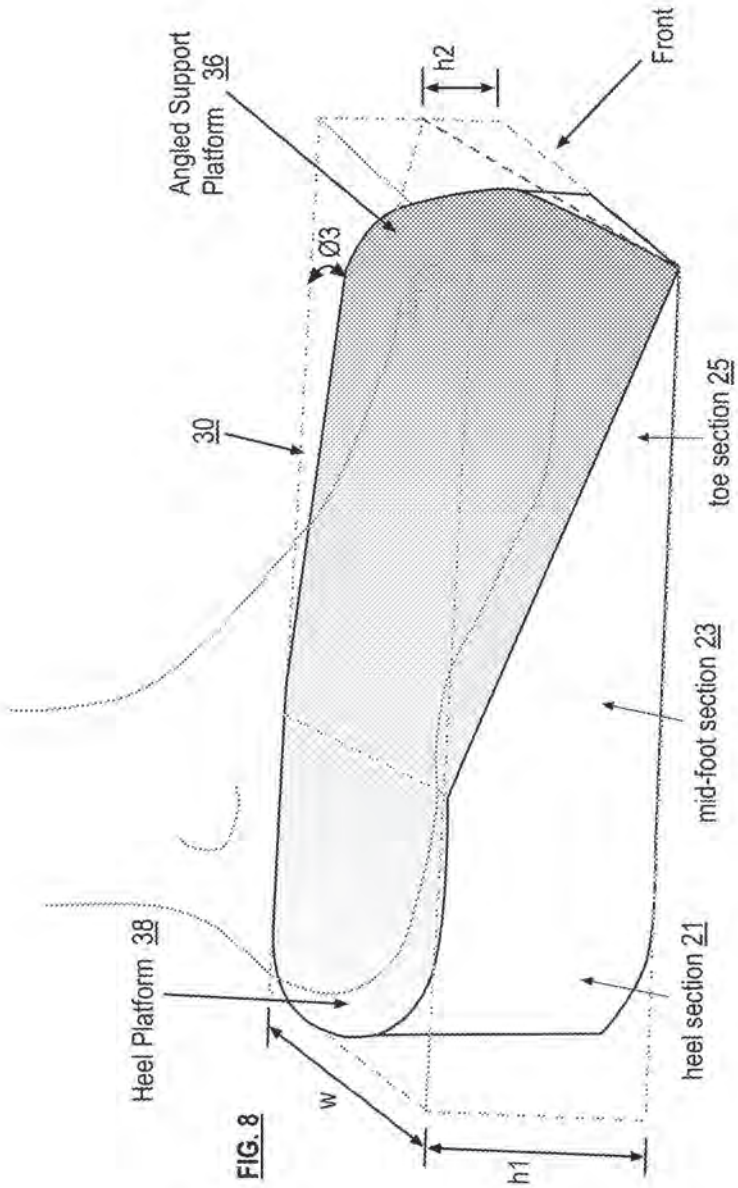

FIG. 8

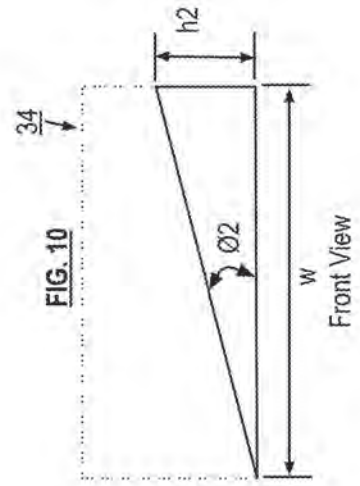

FIG. 10

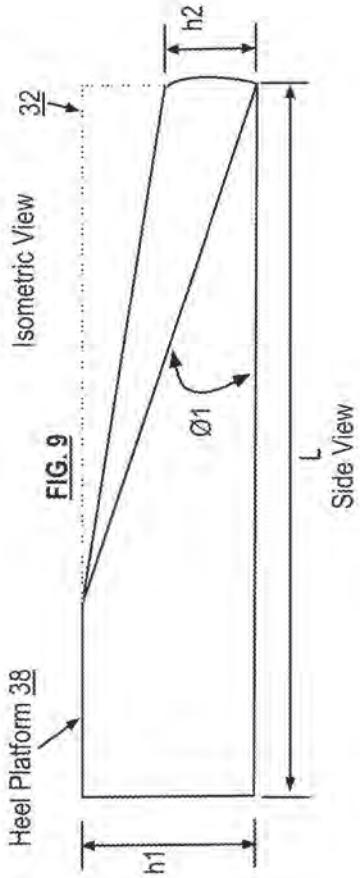

FIG. 9

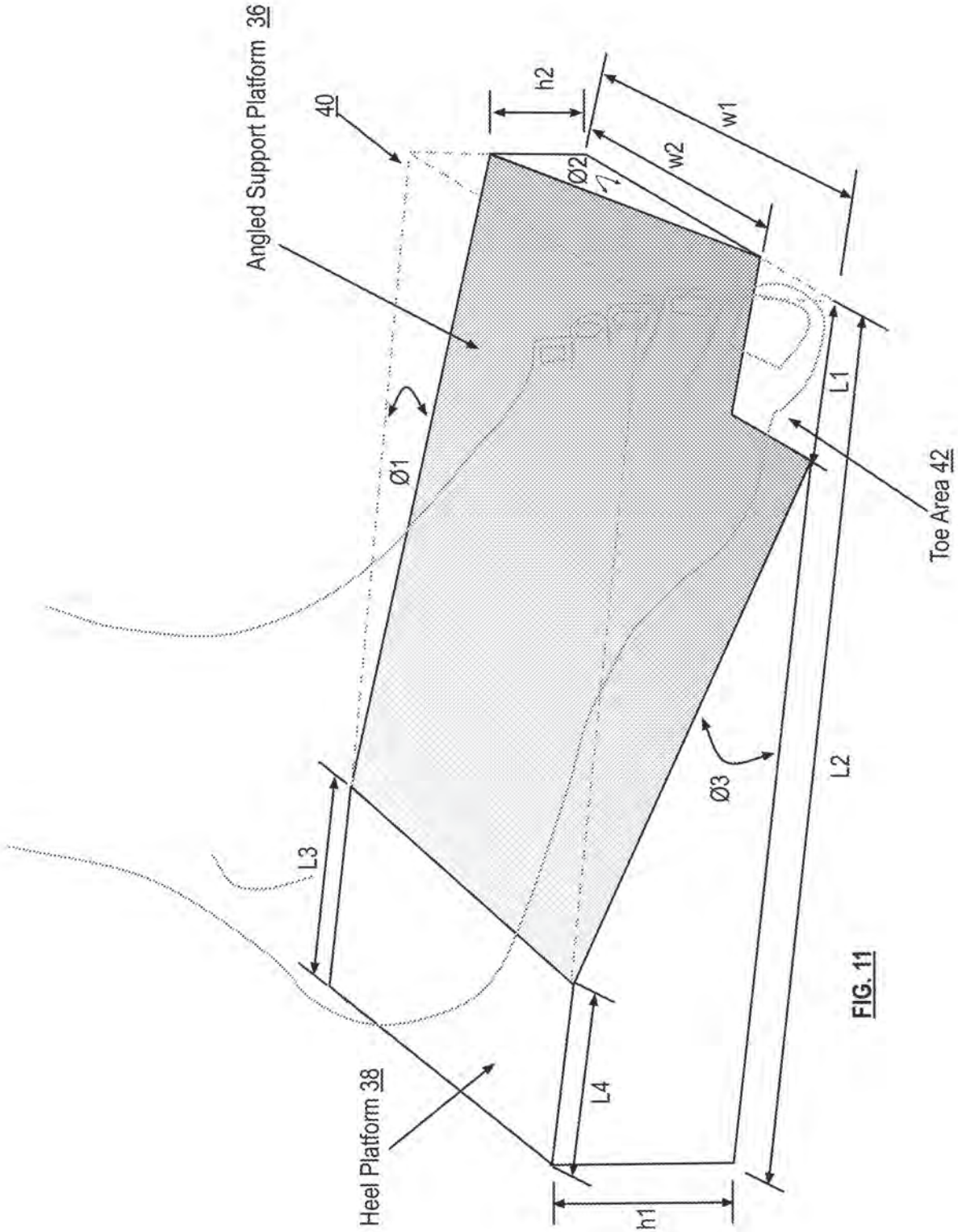
Angled Support Platform 36
40
h2
w1
w2
Ø2
Ø1
L1
Toe Area 42
Ø3
L2
L3
L4
Heel Platform 38
h1

FIG. 11

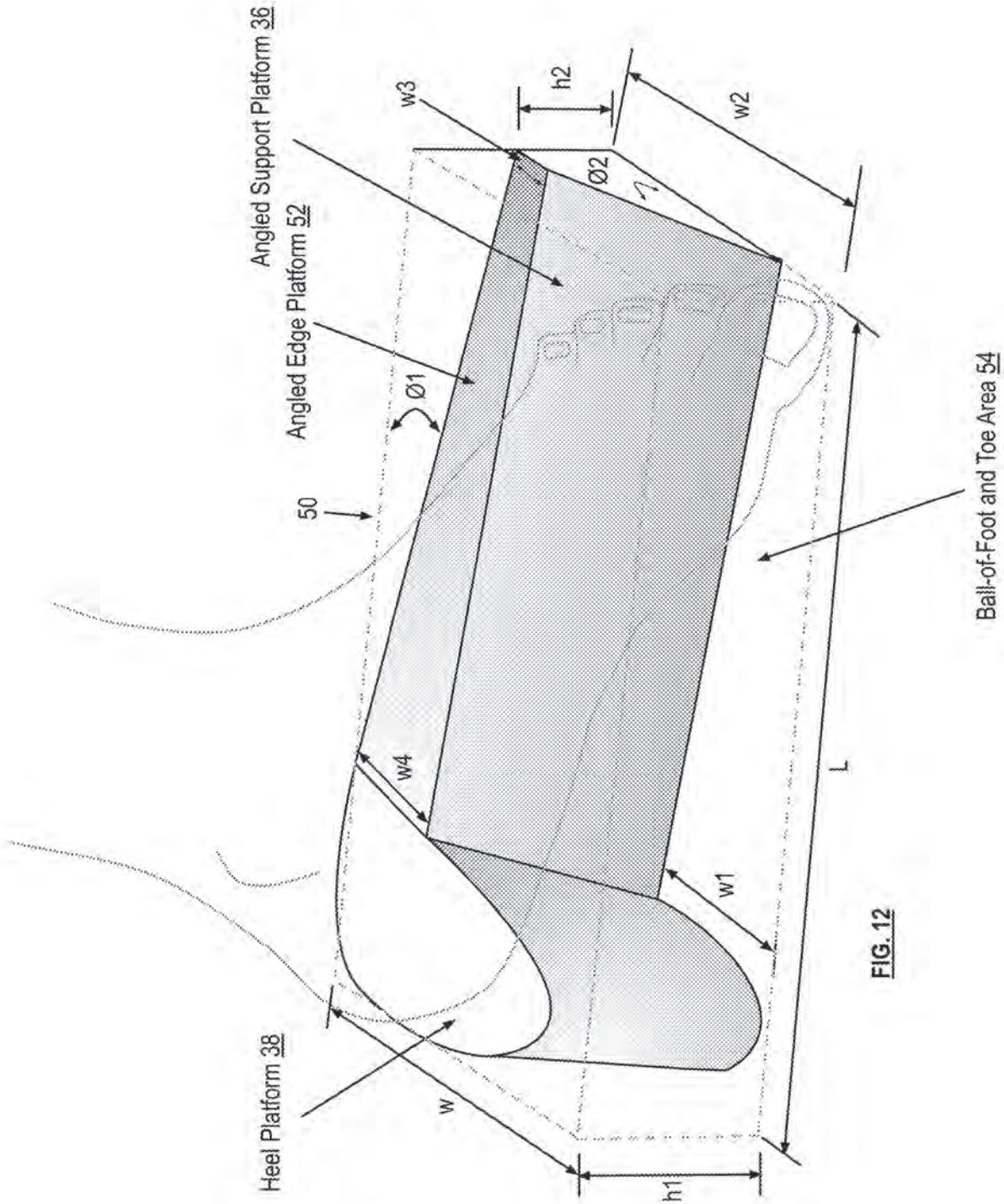
Angled Support Platform 36
Angled Edge Platform 52
50
Heel Platform 38
w3
h2
w2
Ø2
Ø1
w4
w
w1
h1
L
Ball-of-Foot and Toe Area 54

FIG. 12

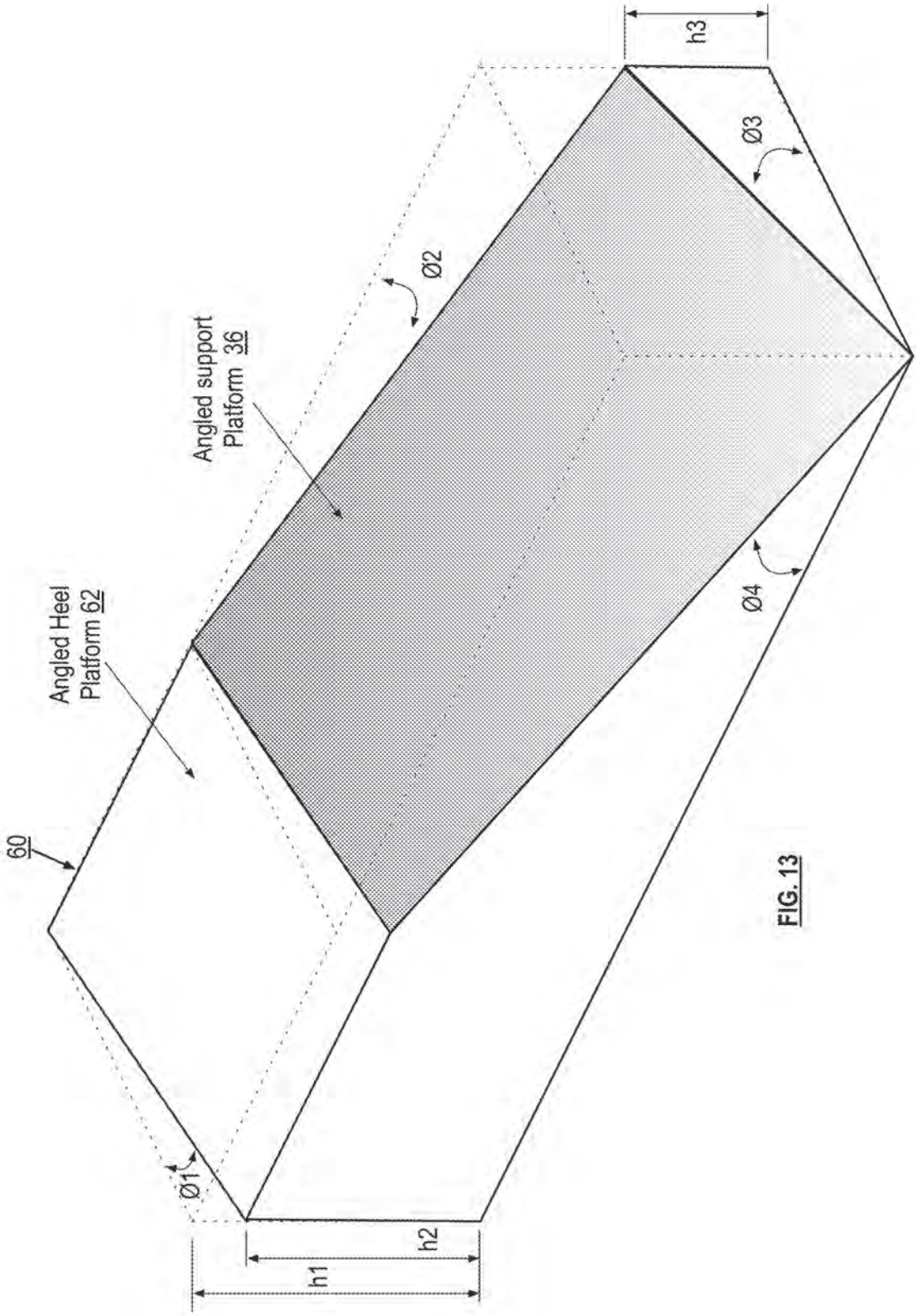
60
Angled Heel Platform 62
Angled support Platform 36
Ø1
Ø2
Ø3
Ø4
h1
h2
h3

FIG. 13

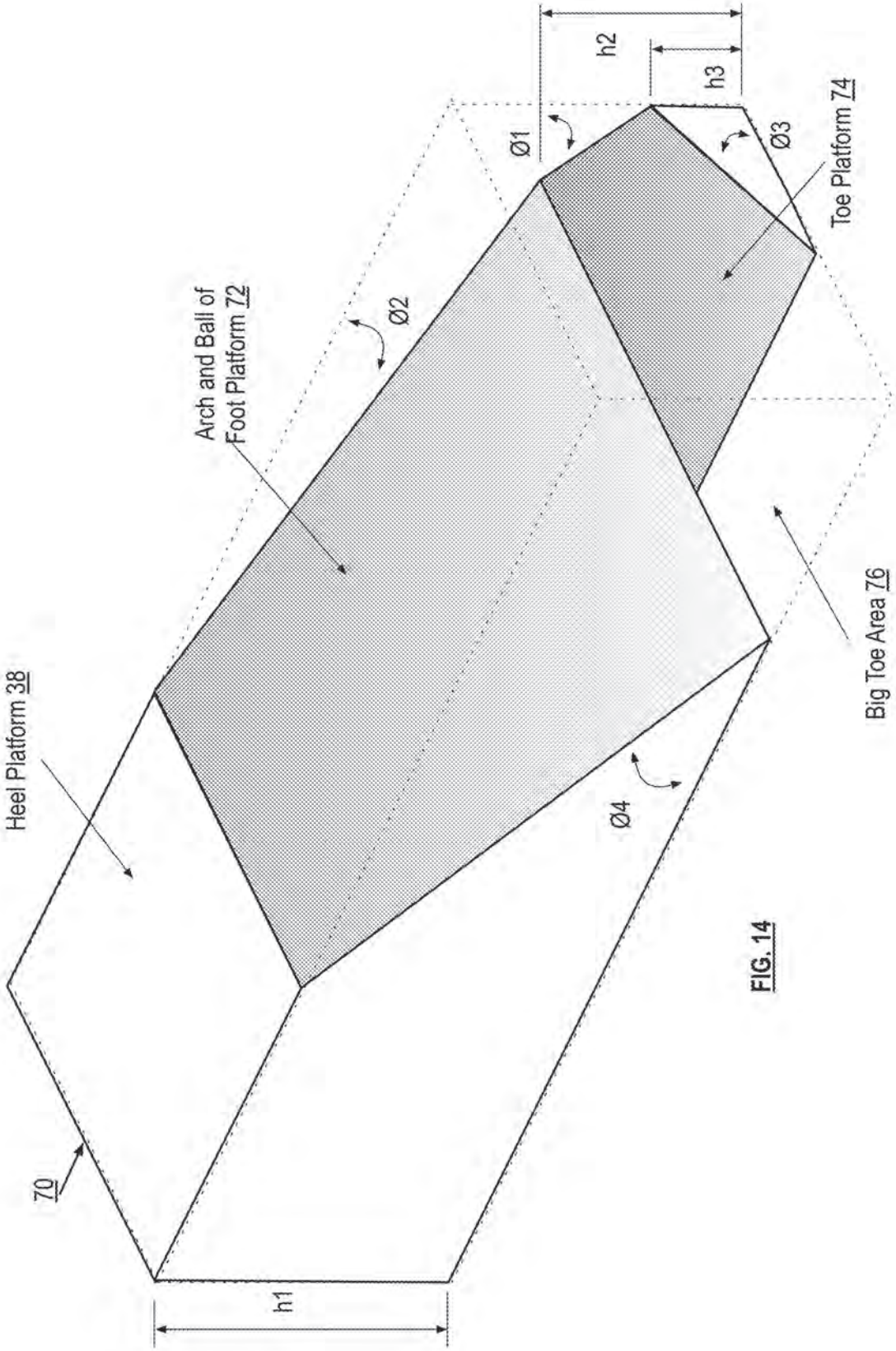
70
Heel Platform 38
h1
Arch and Ball of Foot Platform 72
Ø2
Ø4
Big Toe Area 76
Ø1
h2
h3
Ø3
Toe Platform 74

FIG. 14

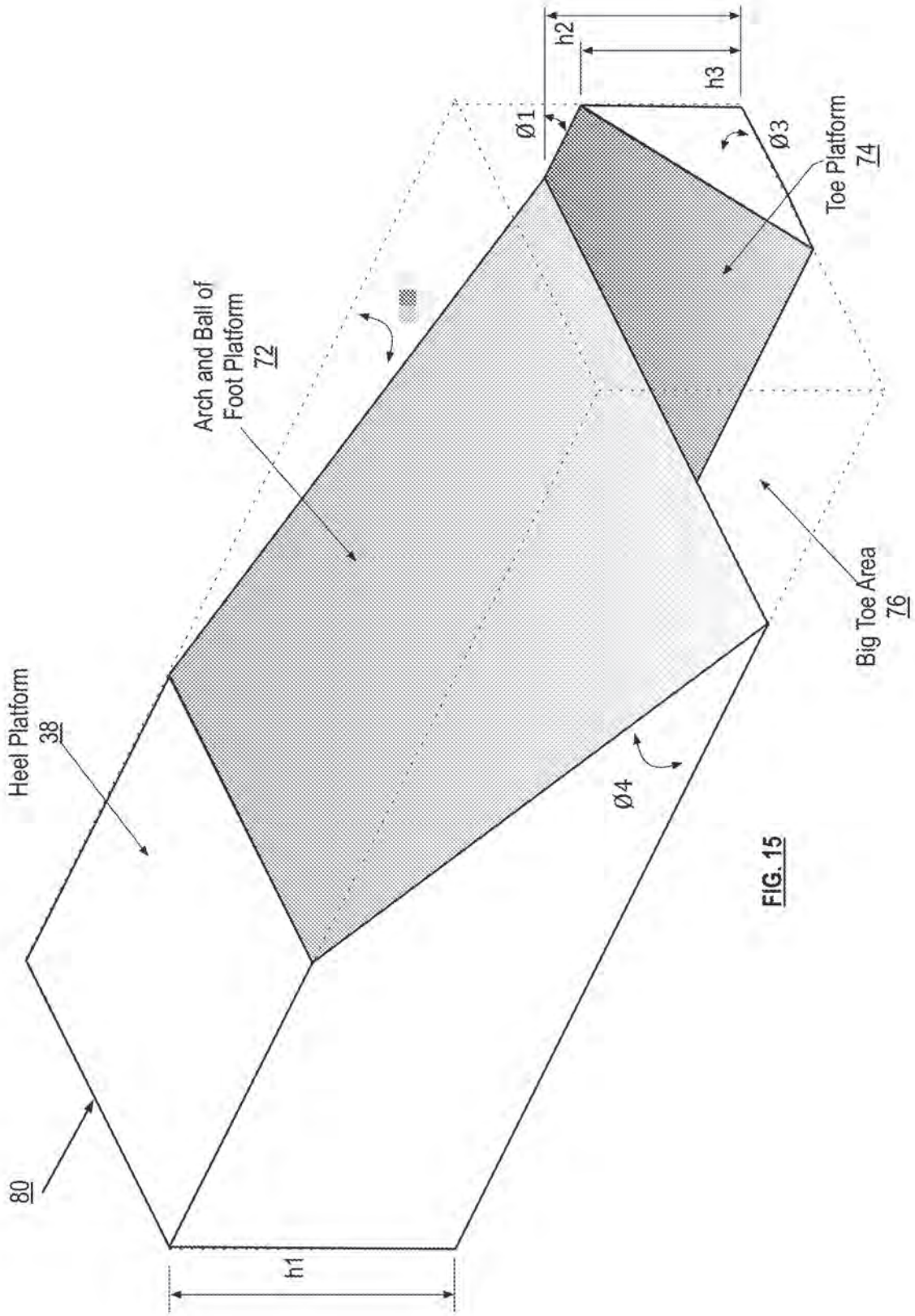
80
Heel Platform
38
Arch and Ball of
Foot Platform
72
Toe Platform
74
Big Toe Area
76
h1
h2
h3
Ø1
Ø3
Ø4

FIG. 15

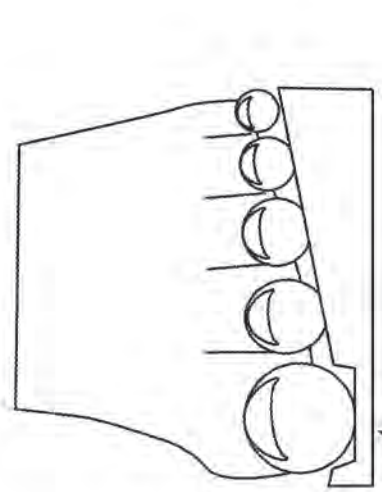

FIG. 17

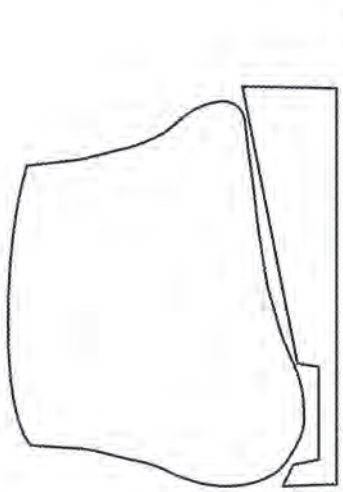

FIG. 18

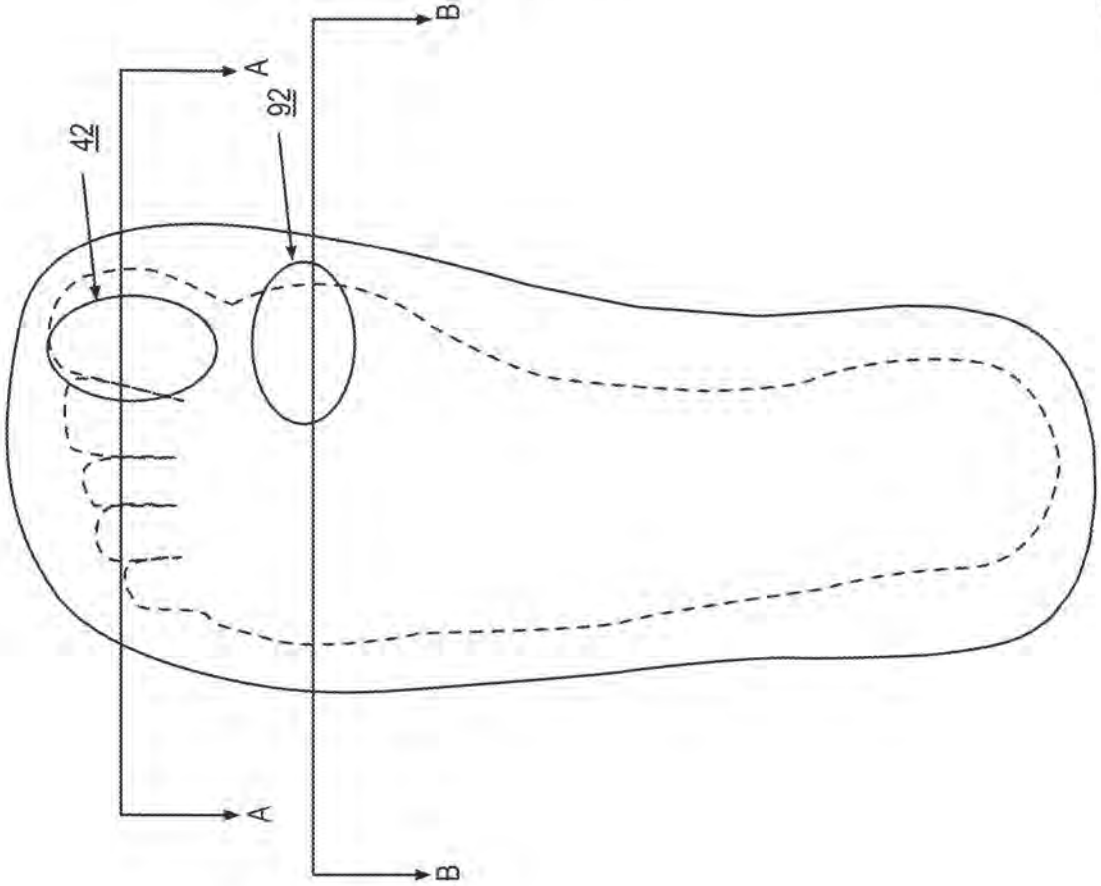

FIG. 16

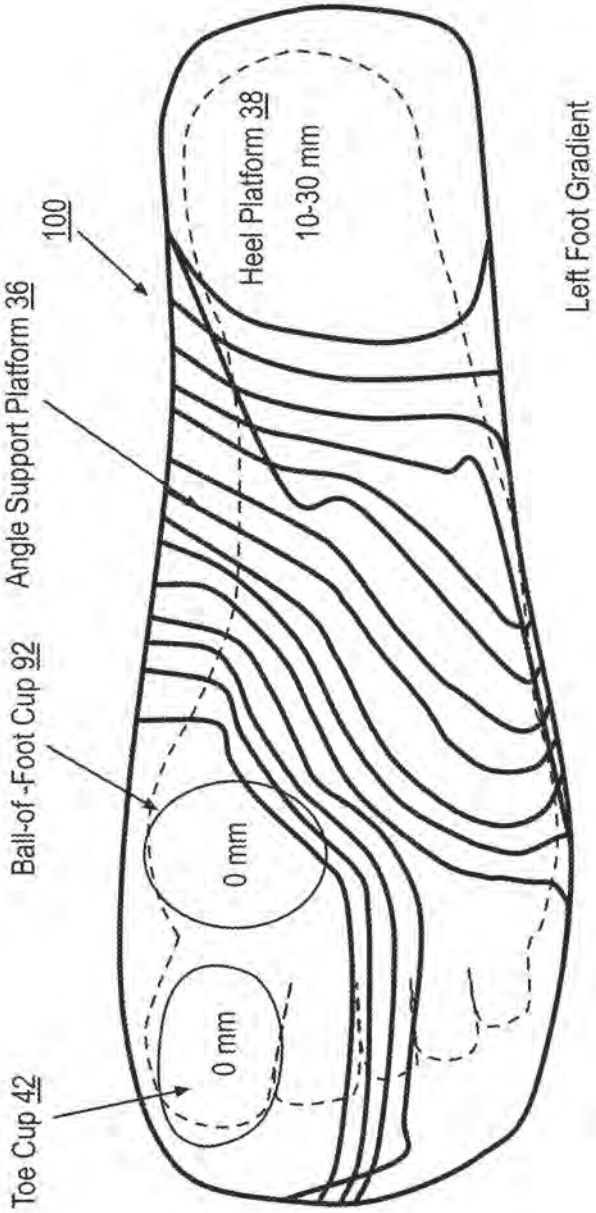
100
Angle Support Platform 36
Ball-of -Foot Cup 92
Toe Cup 42
0 mm
0 mm
Heel Platform 38
10-30 mm
Left Foot Gradient

FIG. 19

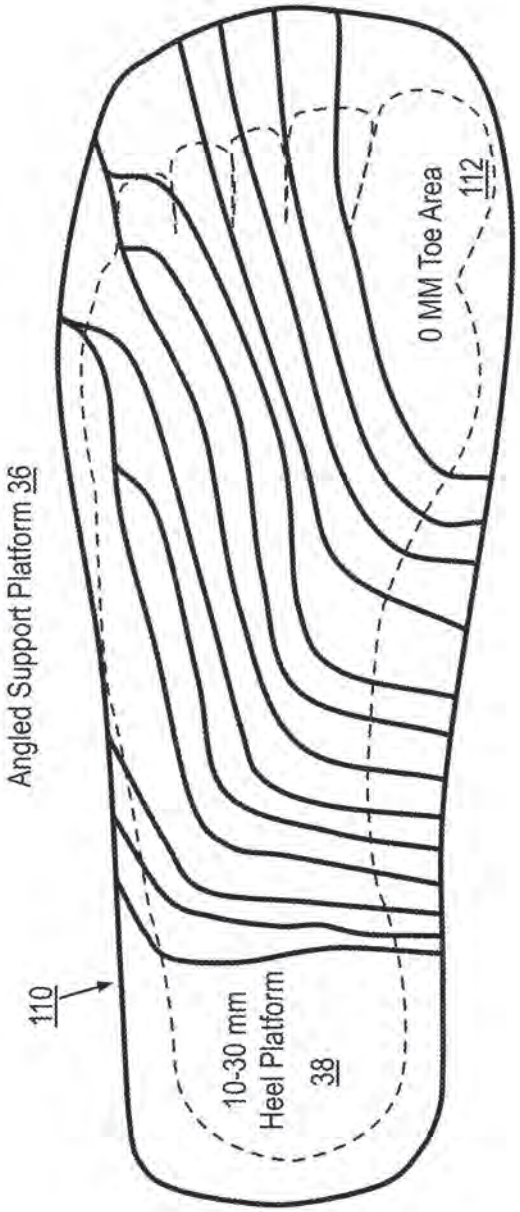
Angled Support Platform 36
110
10-30 mm
Heel Platform
38
0 MM Toe Area
112

FIG. 20

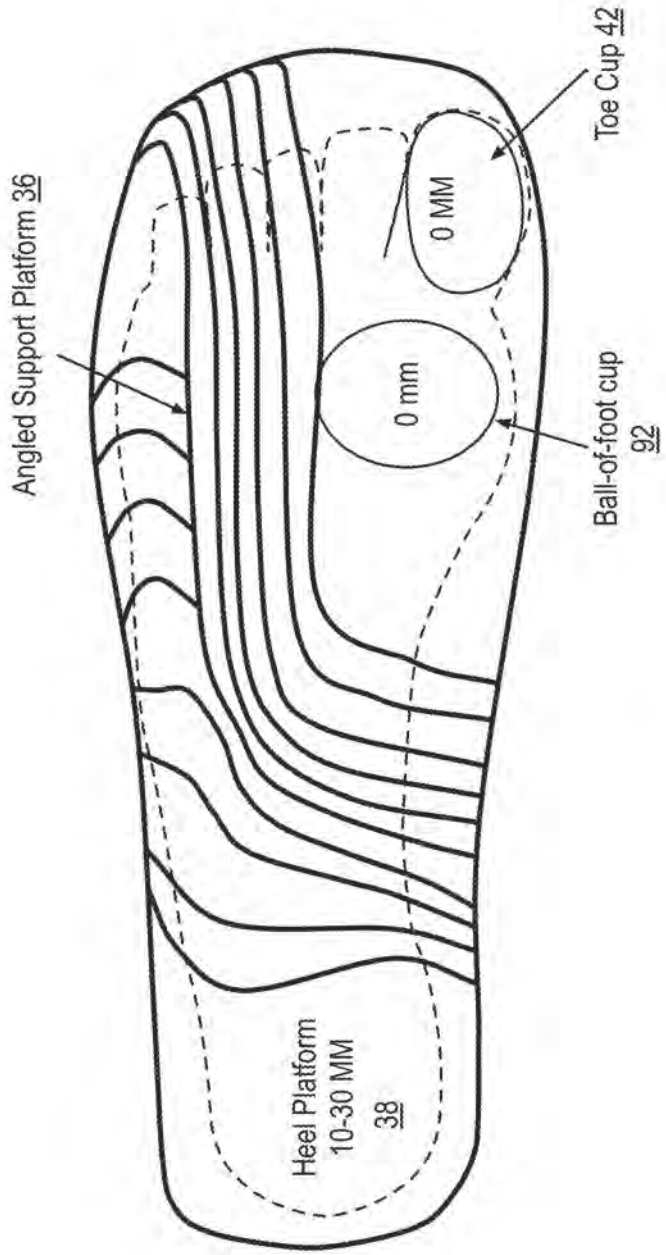
Angled Support Platform 36
Heel Platform
10-30 MM
38
0 mm
0 MM
Ball-of-foot cup
92
Toe Cup 42

FIG. 21

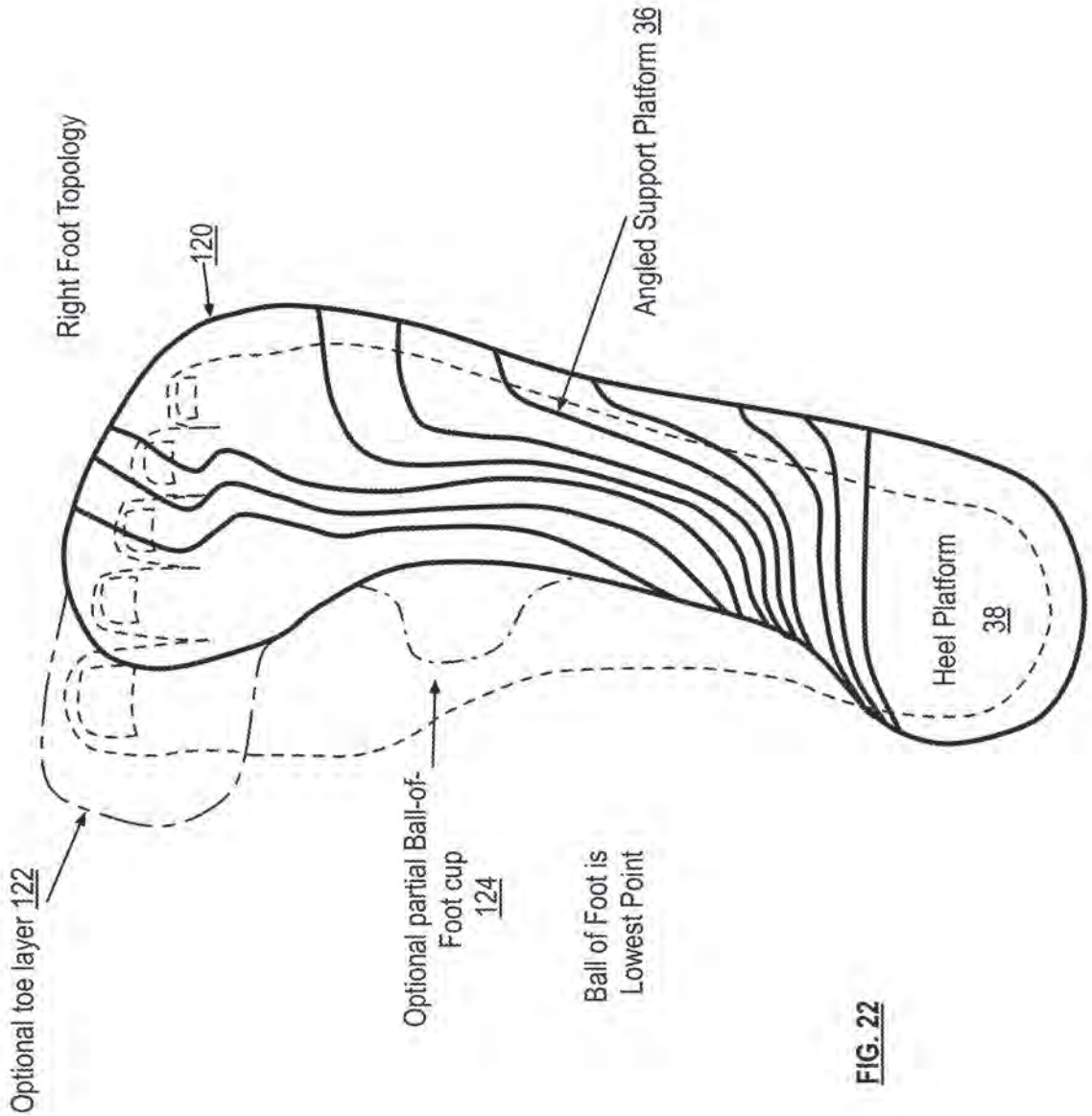
Right Foot Topology
120
Angled Support Platform 36
Heel Platform
38
Optional toe layer 122
Optional partial Ball-of-Foot cup
124
Ball of Foot is Lowest Point

FIG. 22

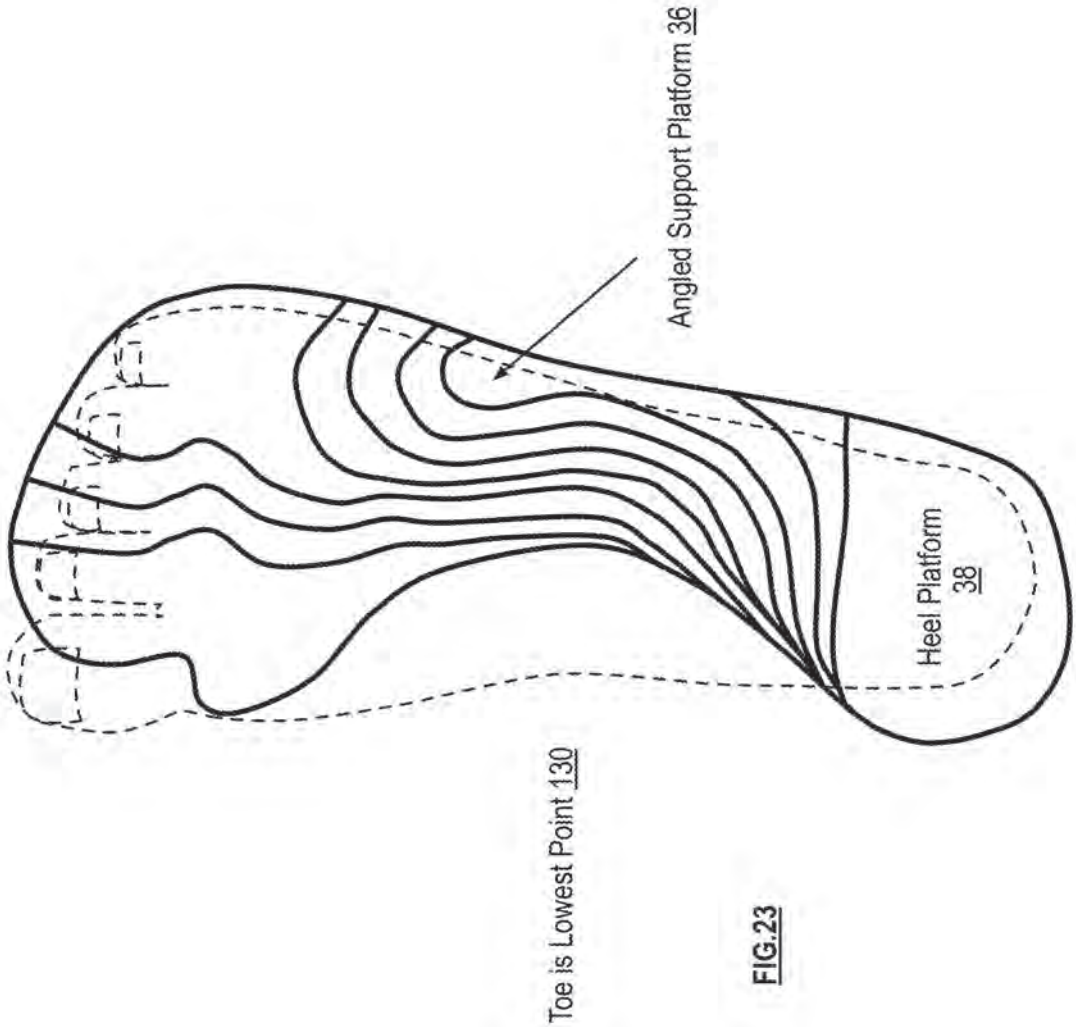
Angled Support Platform 36
Heel Platform 38
Toe is Lowest Point 130

FIG.23

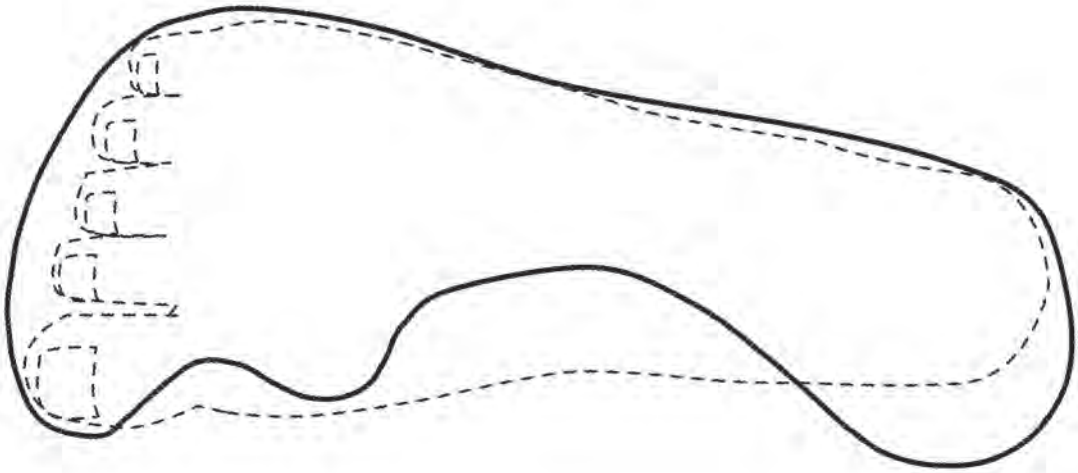

FIG. 24
Layer 1

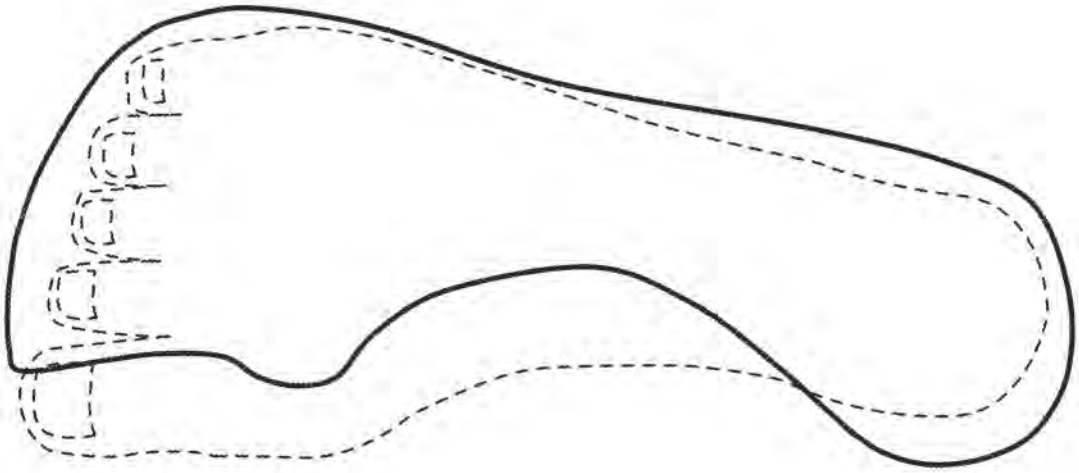

FIG. 25 Layer 2

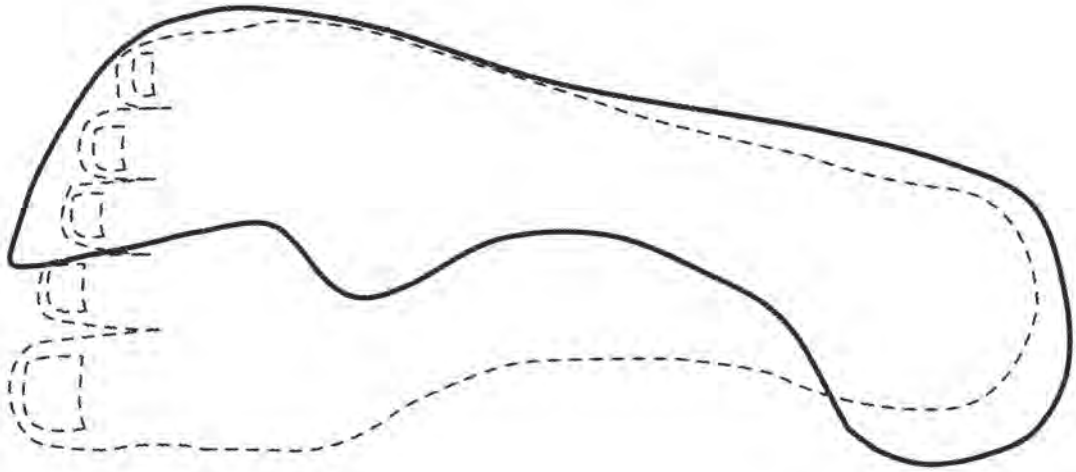

FIG. 26

Layer 3

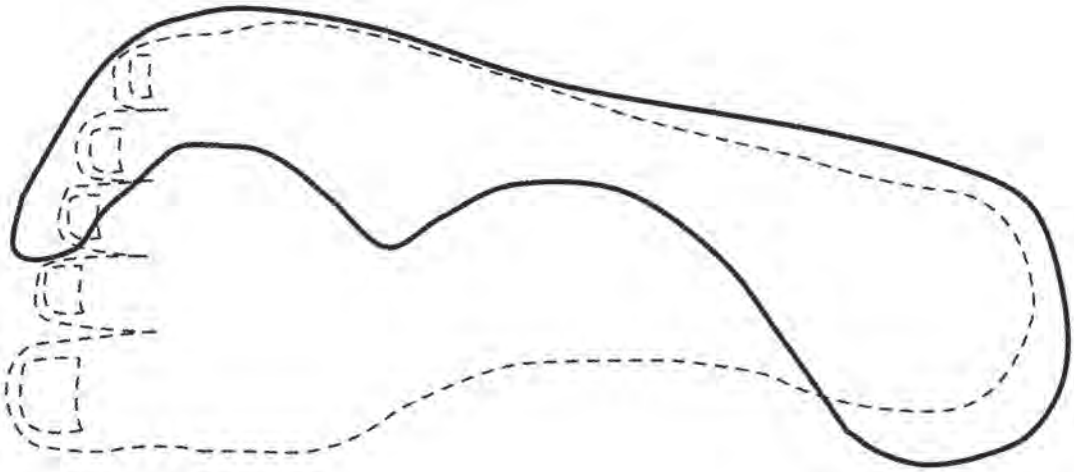

FIG. 27
Layer 4

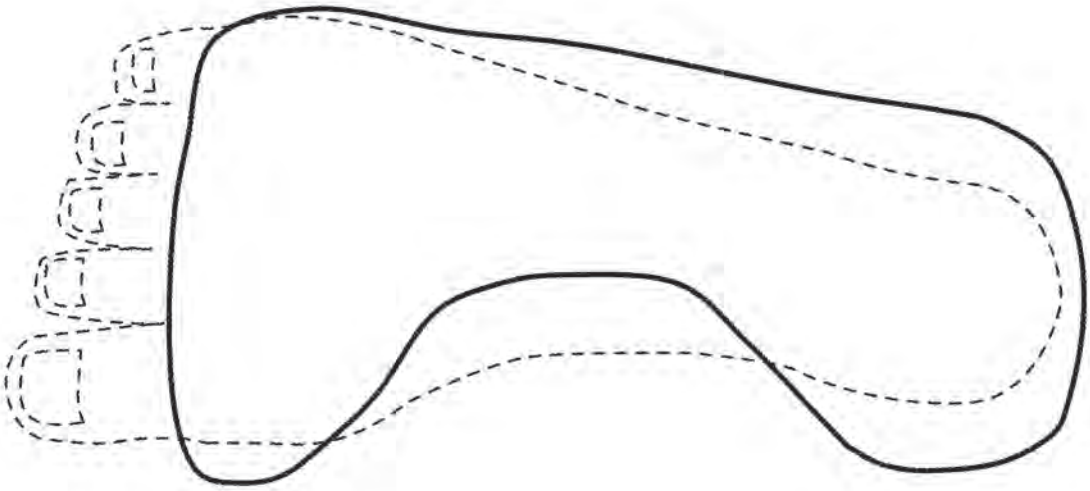

FIG.28
Layer 5

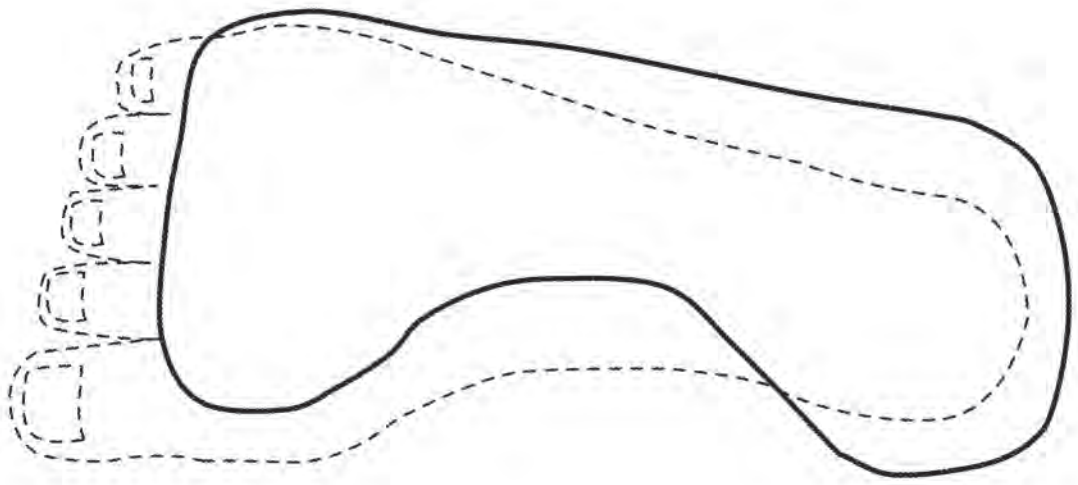

FIG.29

Layer 6

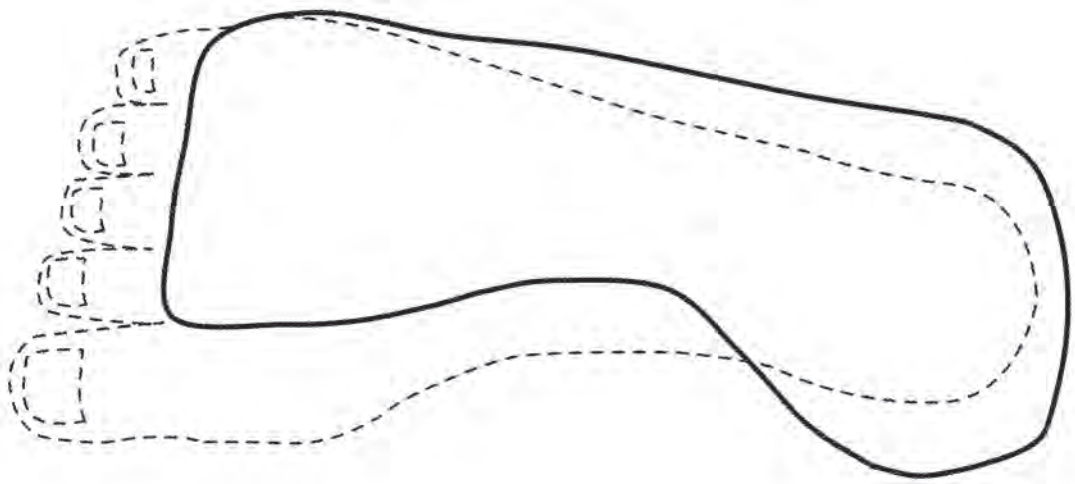

FIG.30 Layer 7

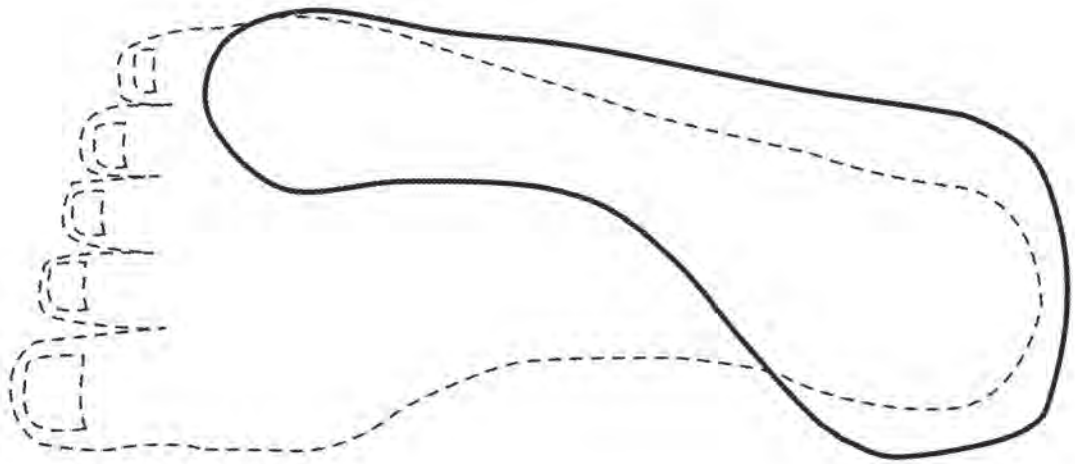

FIG.31

Layer 8

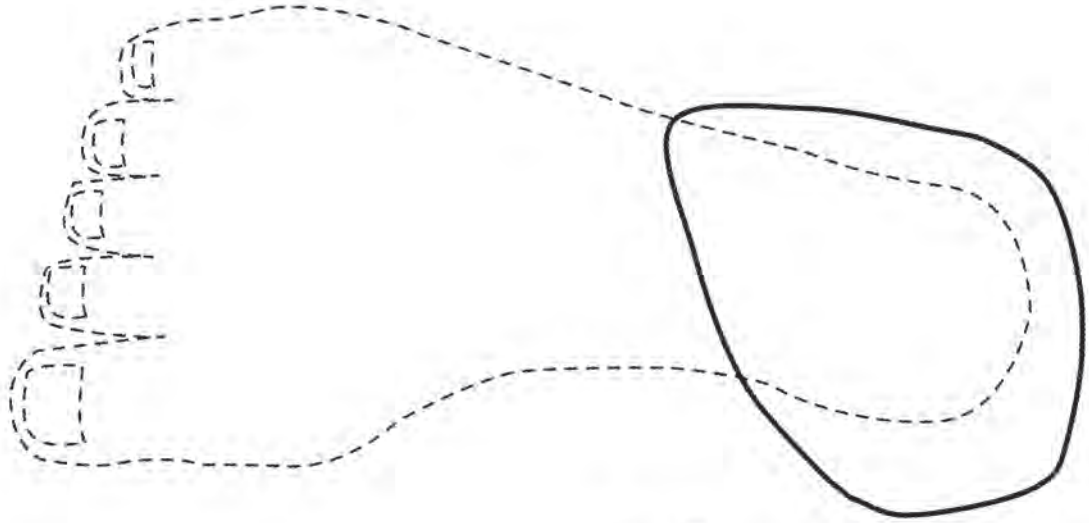

FIG. 33
Layer 10

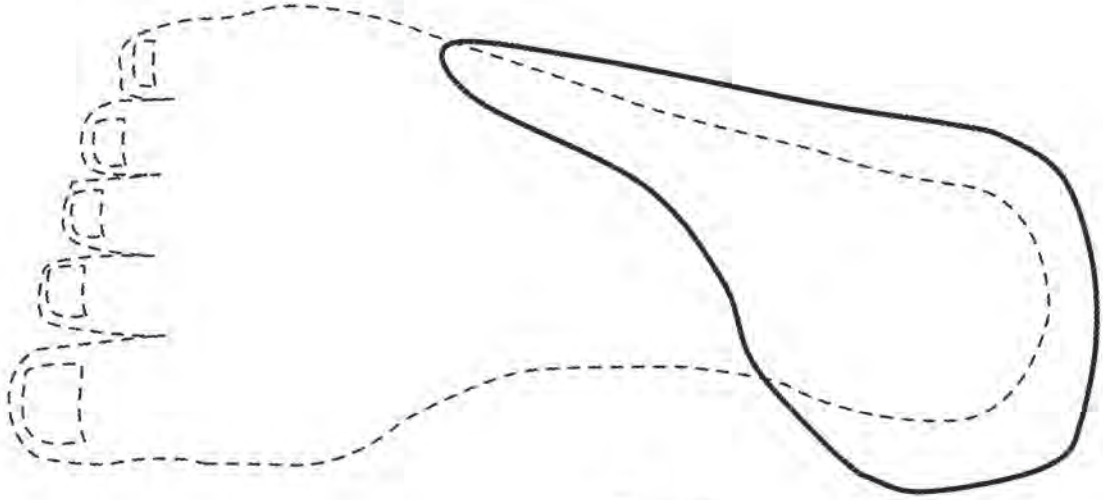

FIG. 32
Layer 9

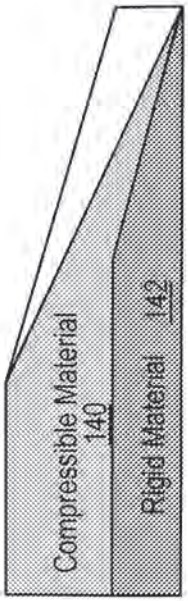

FIG. 34
Insole Side View

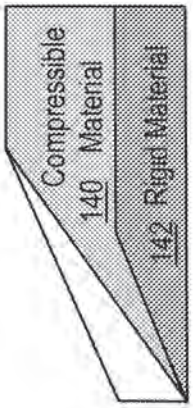

FIG. 35
Front View

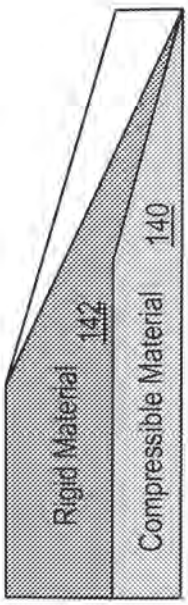

FIG. 36
Insole Side View

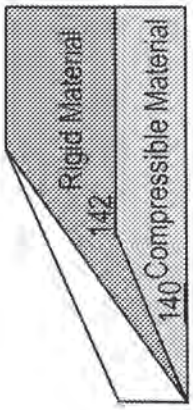

FIG. 37
Front View

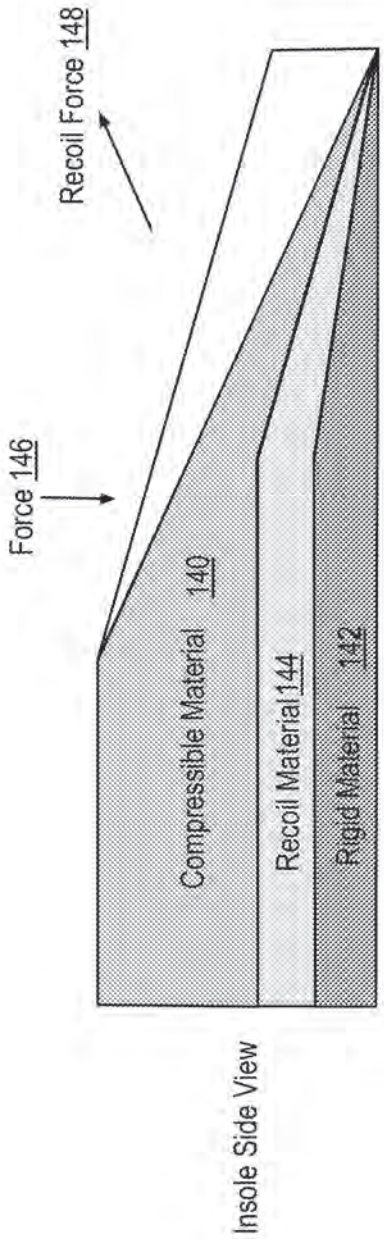
Force 146
Recoil Force 148
Compressible Material 140
Recoil Material 144
Rigid Material 142
Insole Side View

FIG. 38

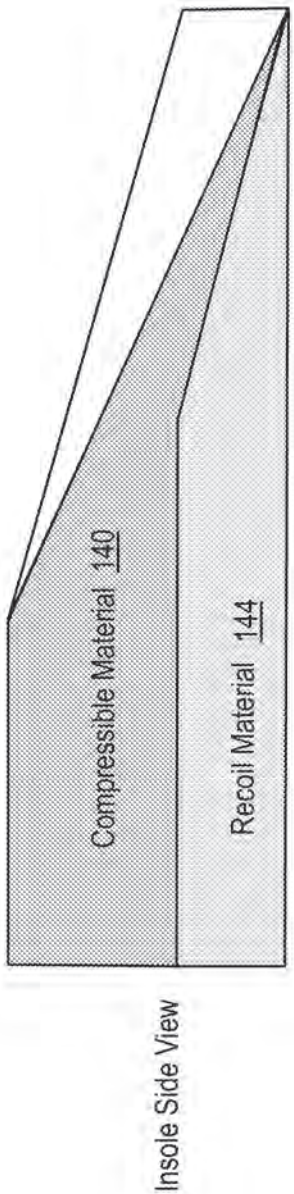
Compressible Material 140
Recoil Material 144
Insole Side View

FIG. 39

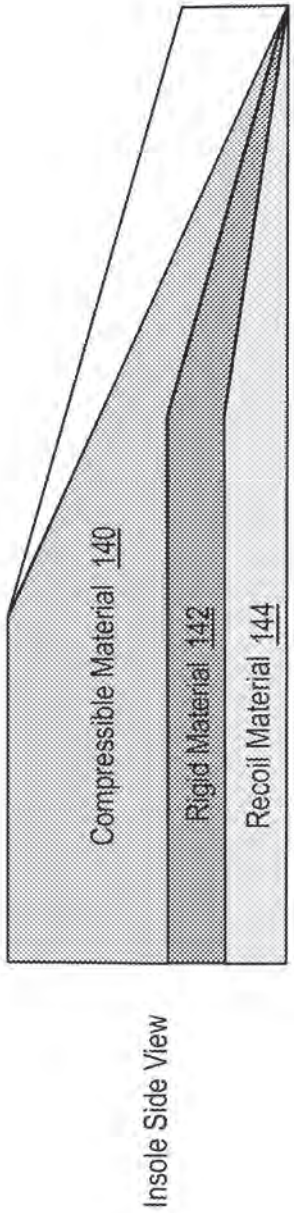
Compressible Material 140
Rigid Material 142
Recoil Material 144
Insole Side View

FIG. 40

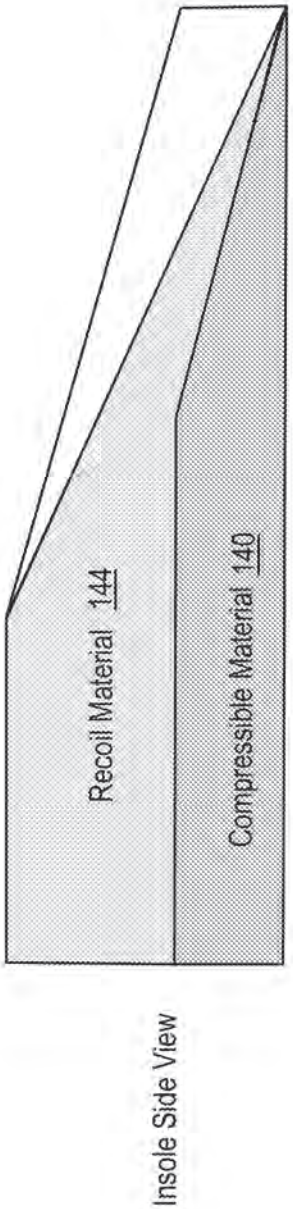
Recoil Material 144
Compressible Material 140
Insole Side View

FIG. 41

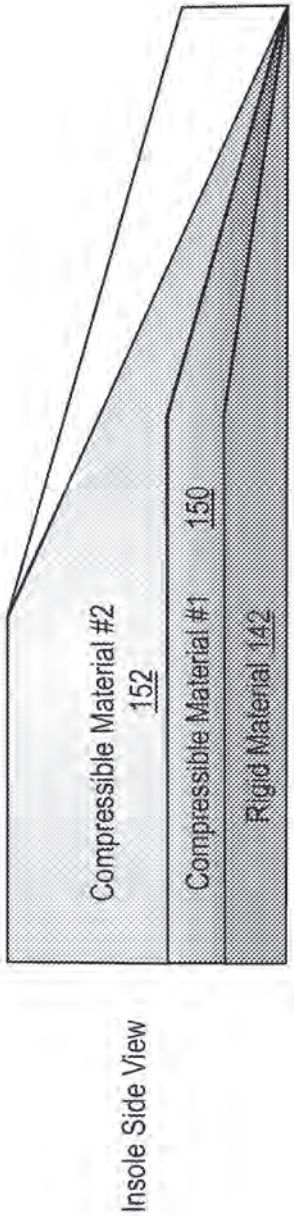
Insole Side View
Compressible Material #2
152
Compressible Material #1
150
Rigid Material 142

FIG. 42

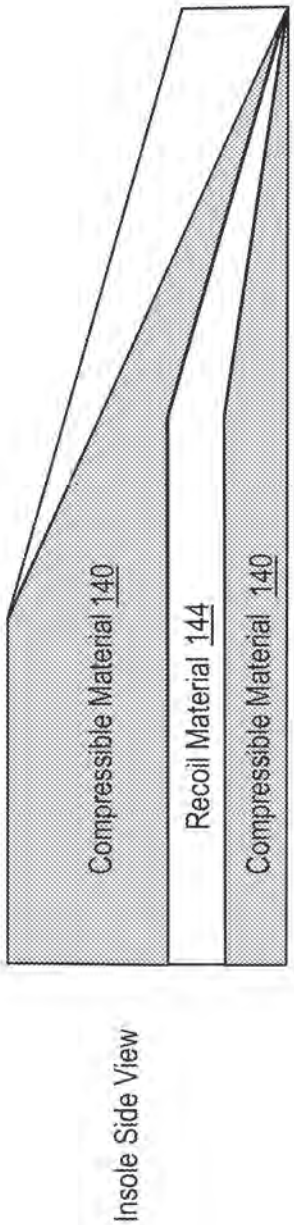
Insole Side View
Compressible Material 140
Recoil Material 144
Compressible Material 140

FIG. 43

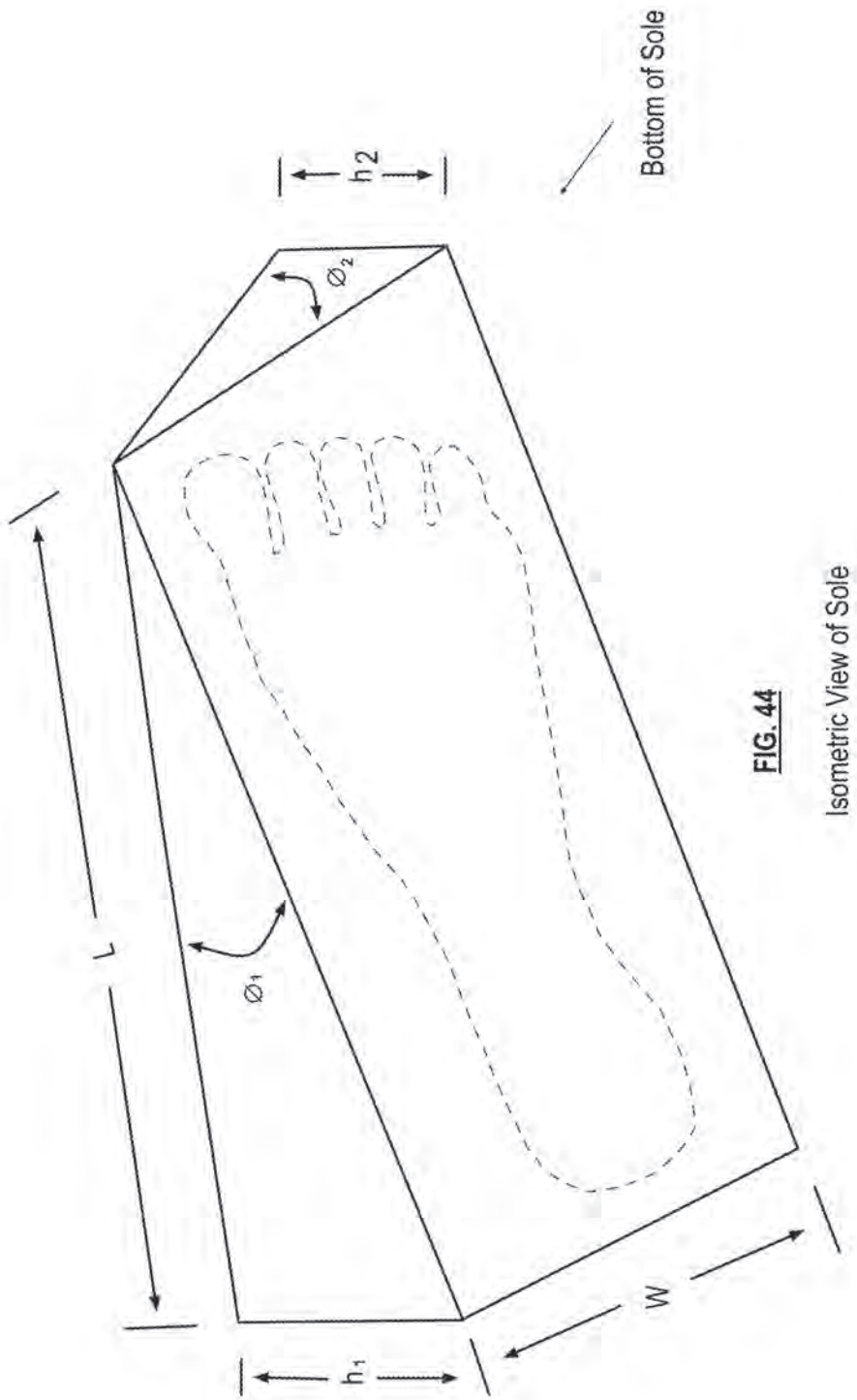

FIG. 44

Isometric View of Sole

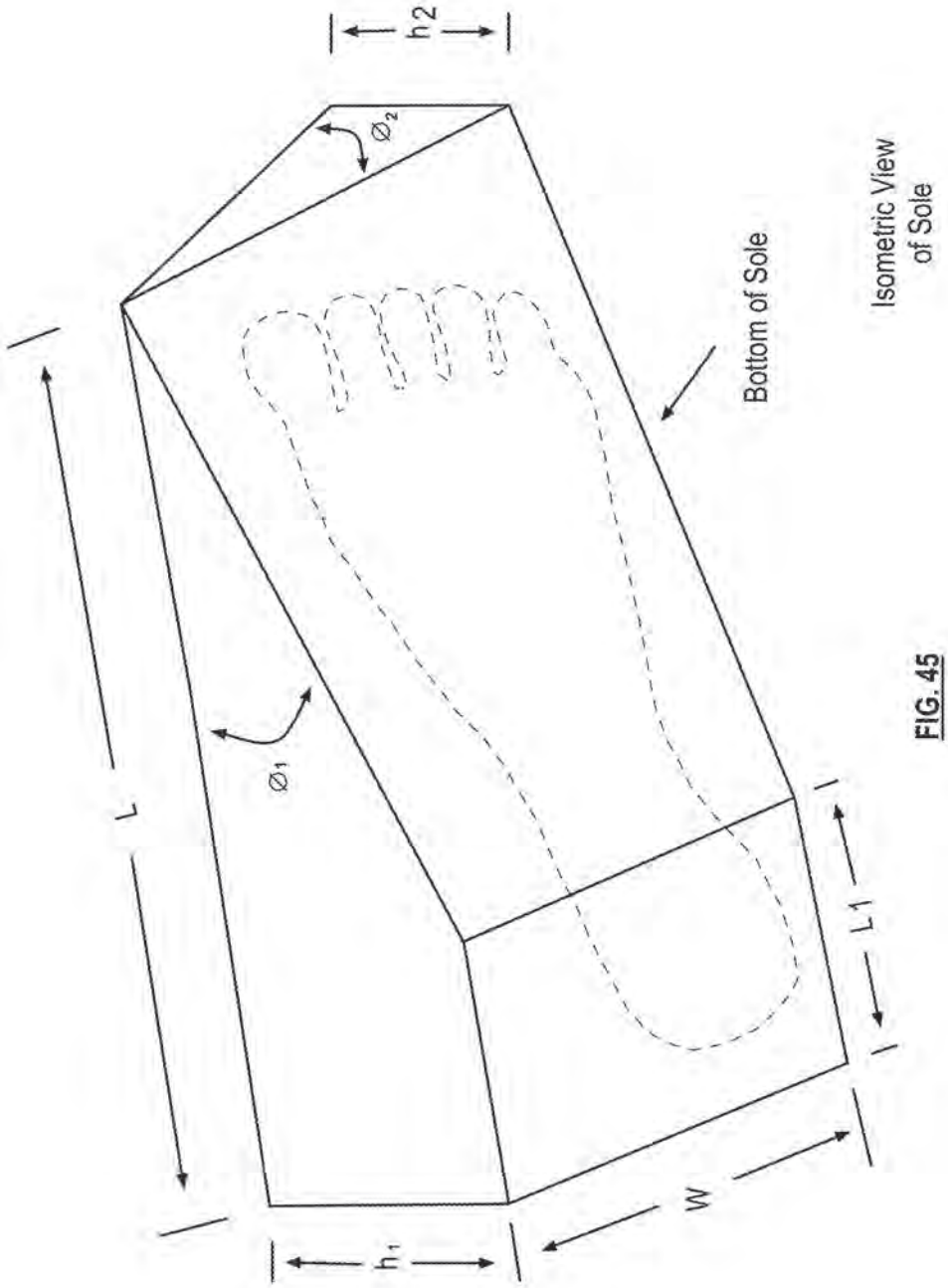

FIG. 45

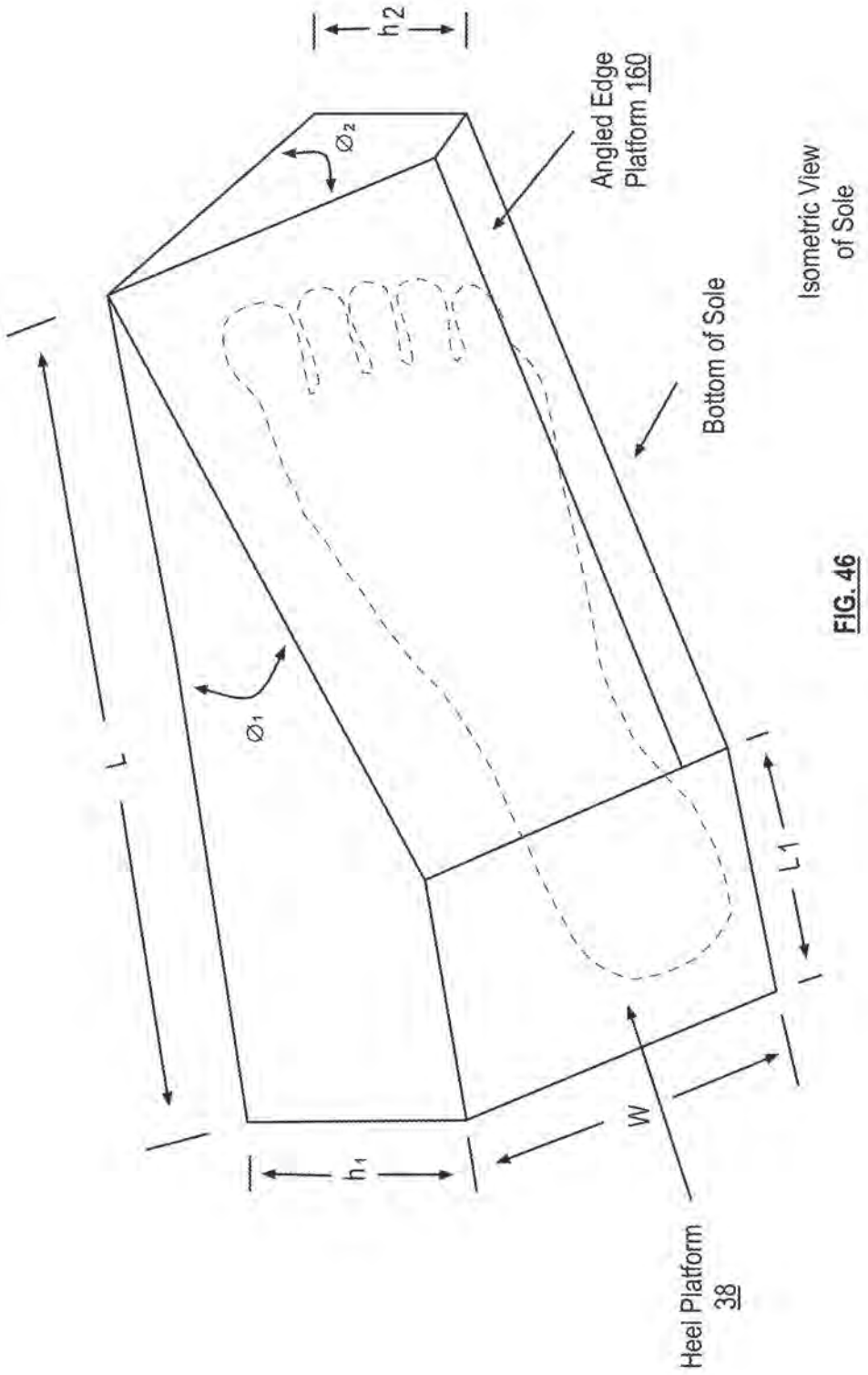
h2
Angled Edge Platform 160
Ø2
Isometric View of Sole
Bottom of Sole
L
Ø1
L1
W
h1
Heel Platform 38

FIG. 46

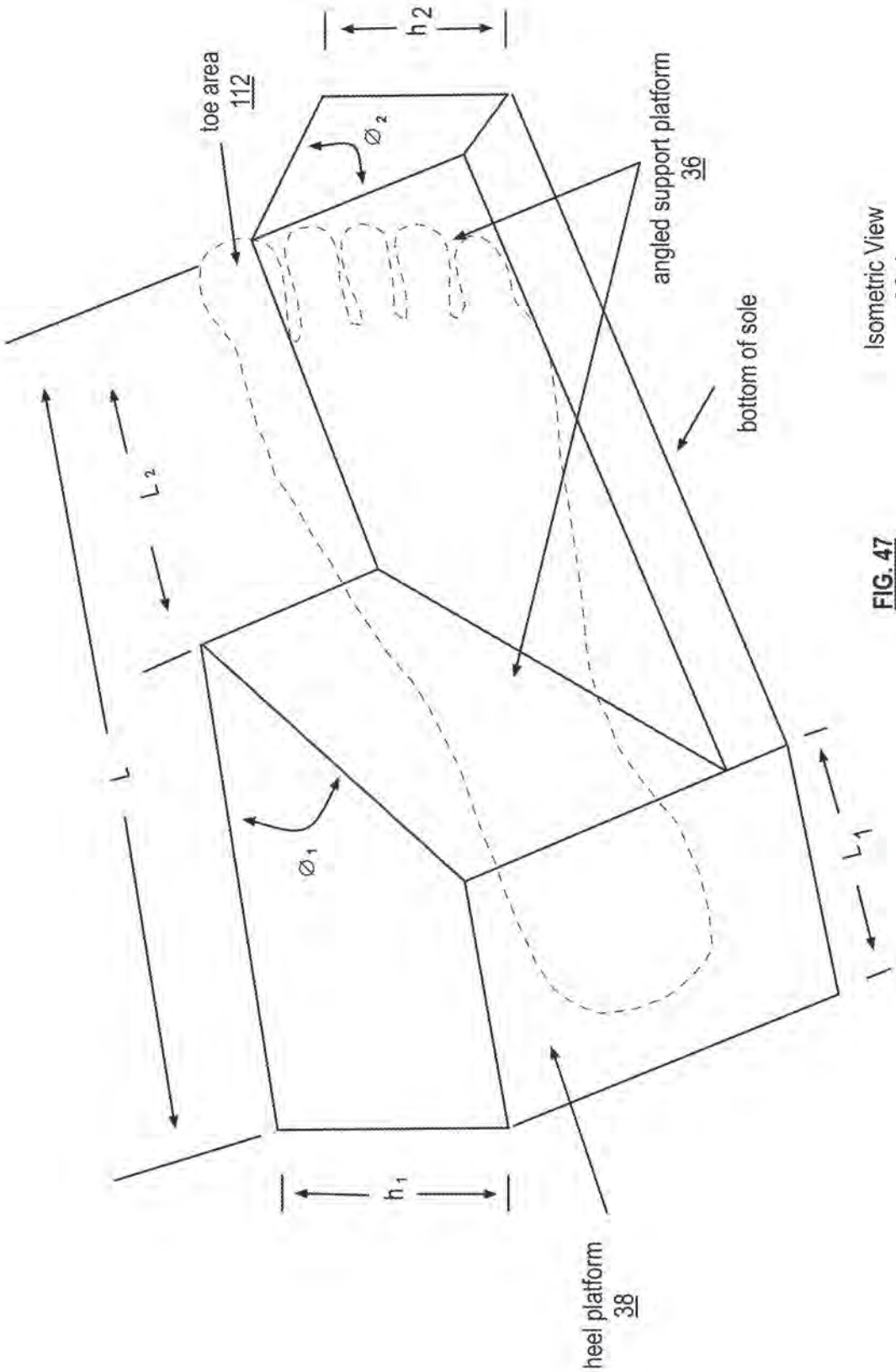

Isometric View of Sole

FIG. 47

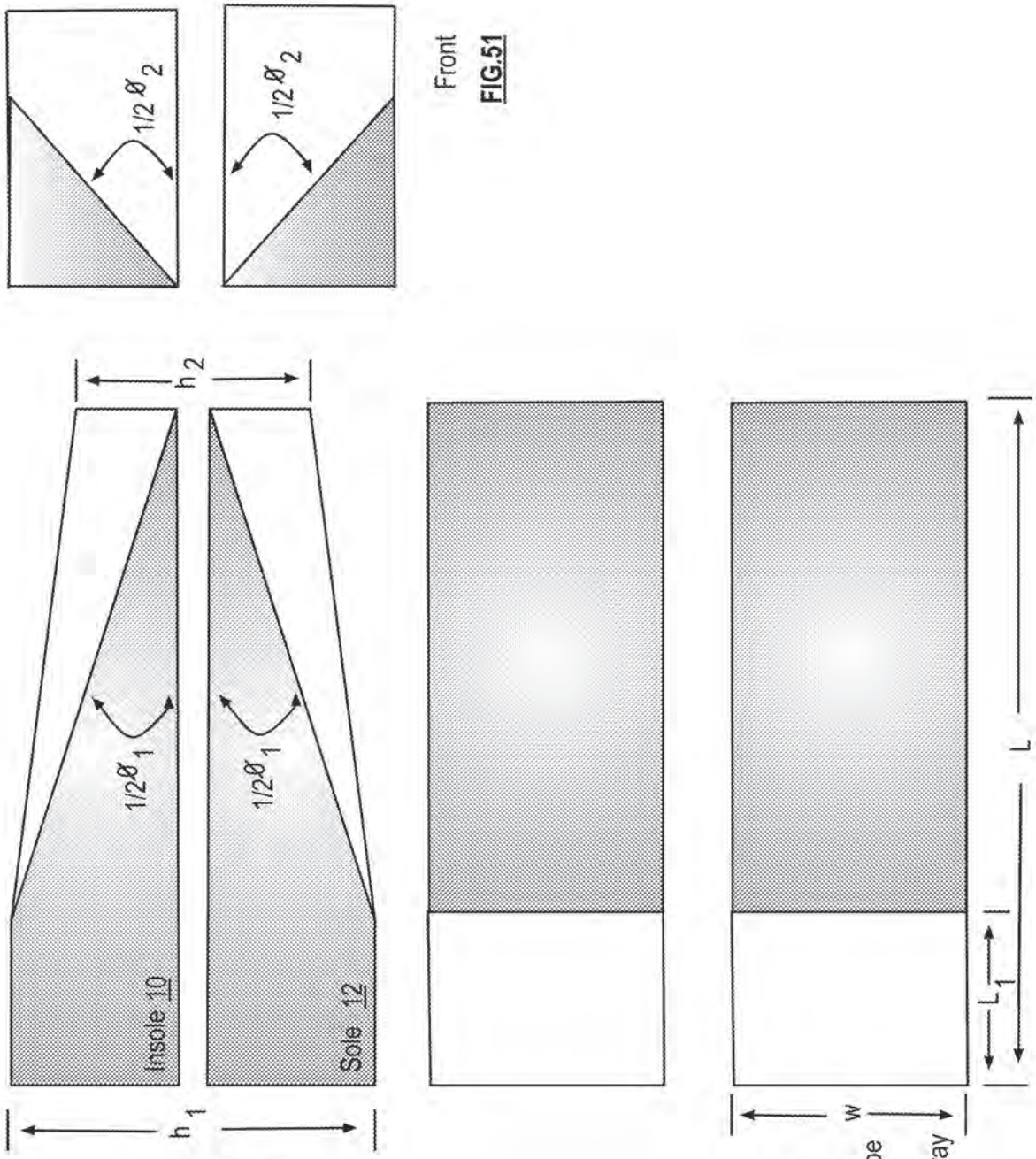

Side
FIG. 48

Can be other ratio than 50/50 could have more or less insole.

Front
FIG.51

Top
FIG. 49

Bottom
FIG. 50

NOTE: Could have various rounding of corners, overall shape more like a sole or insole. Shown this way for slopes

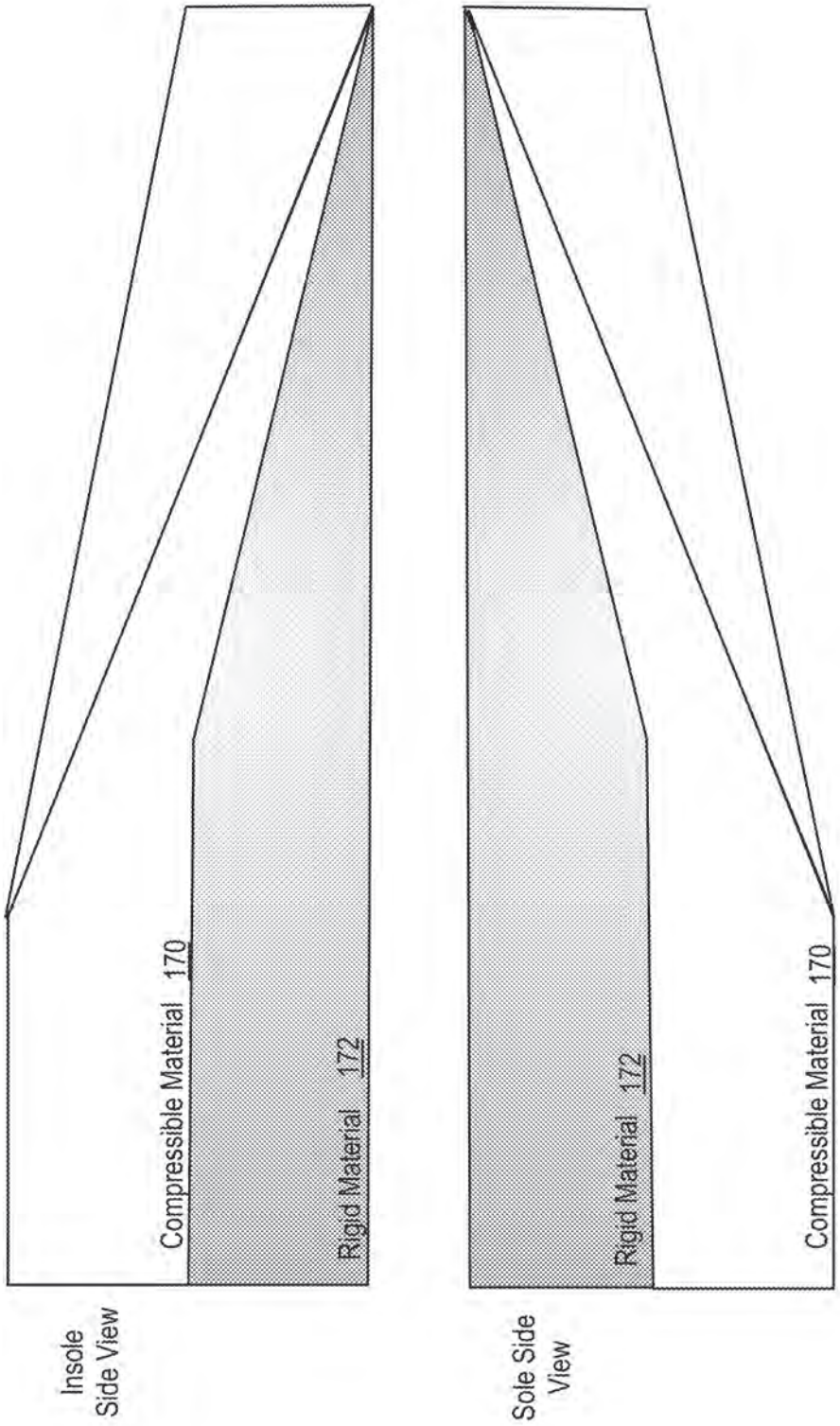
Insole
Side View
Compressible Material 170
Rigid Material 172
Sole Side
View
Rigid Material 172
Compressible Material 170

FIG. 52

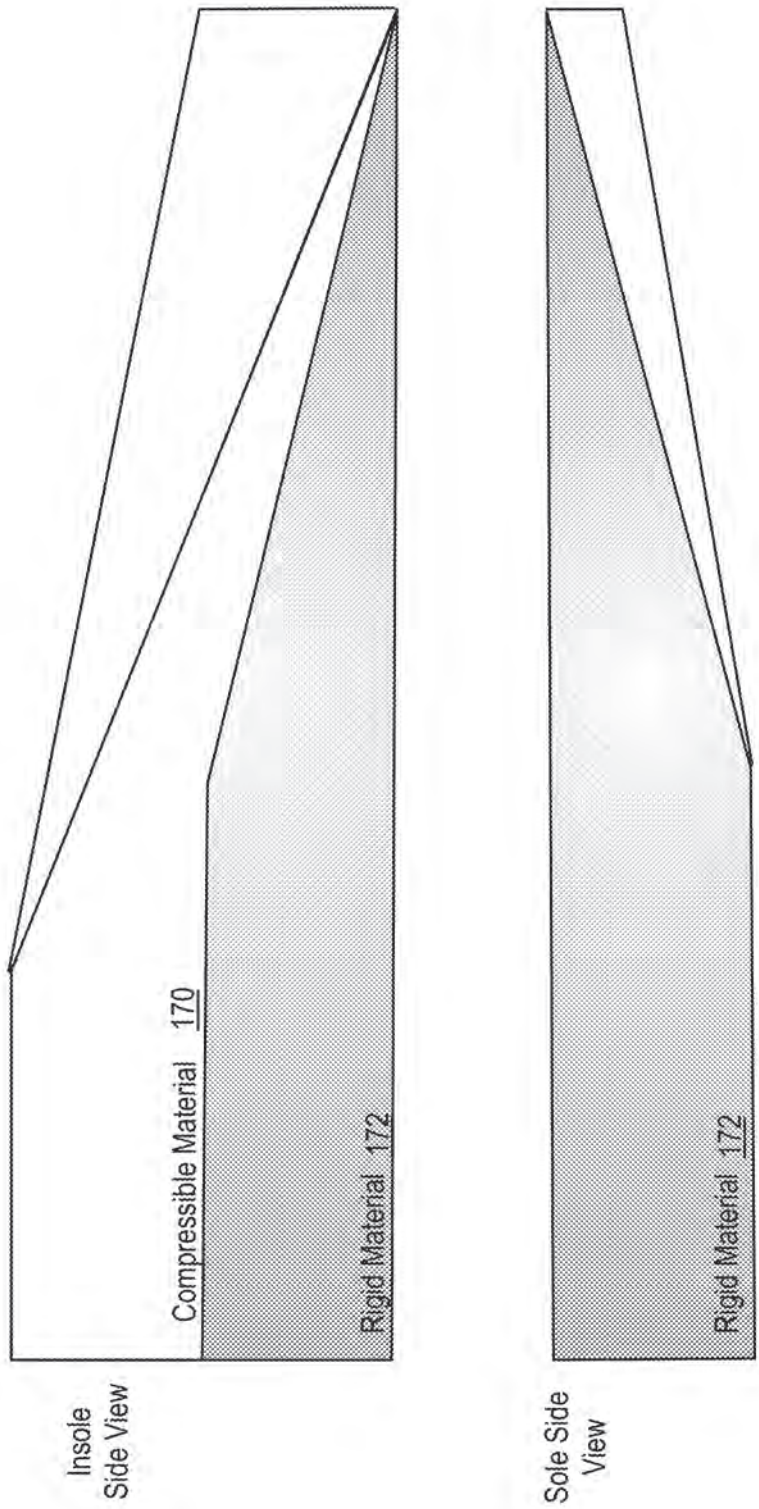
Insole
Side View
Compressible Material 170
Rigid Material 172
Sole Side
View
Rigid Material 172

FIG. 53

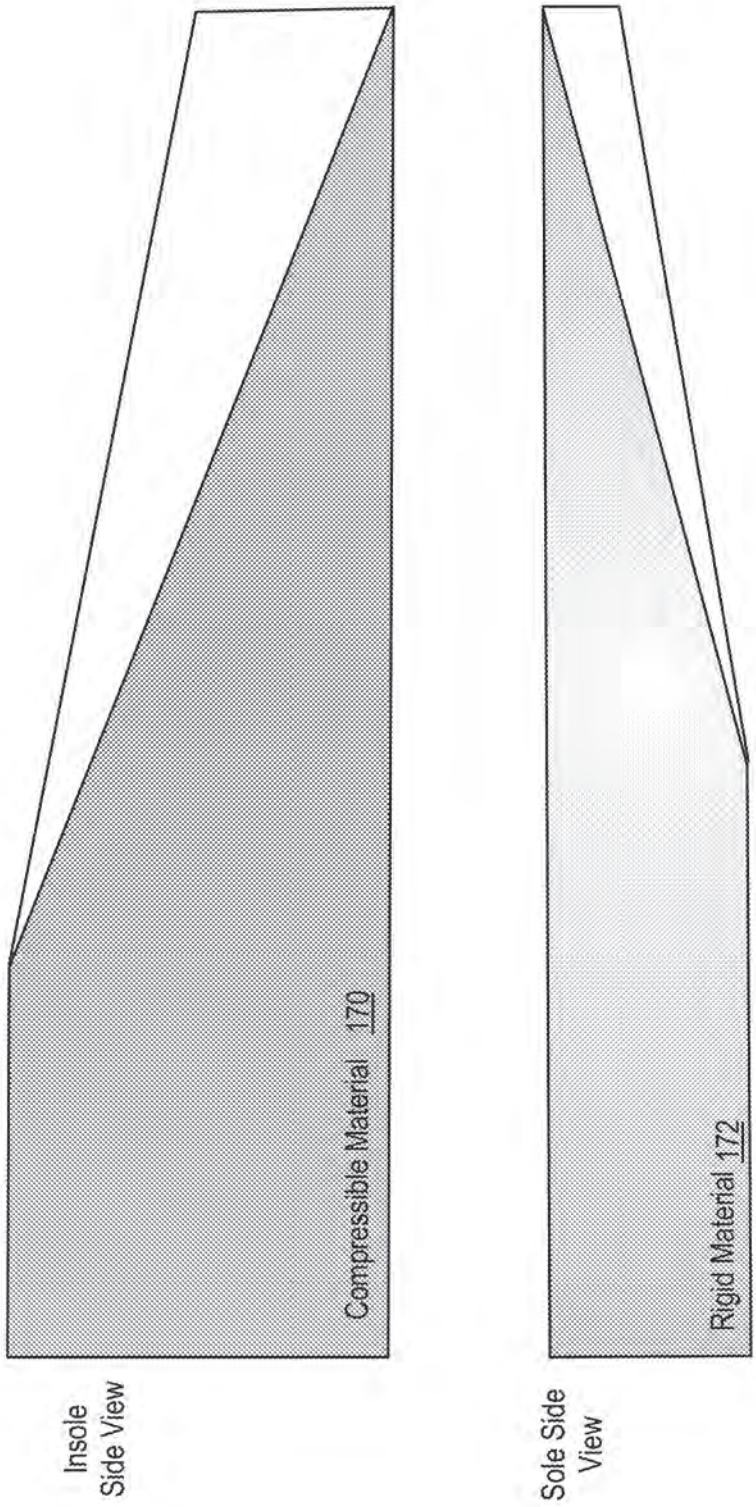
Insole
Side View
Compressible Material 170
Sole Side
View
Rigid Material 172

FIG. 54

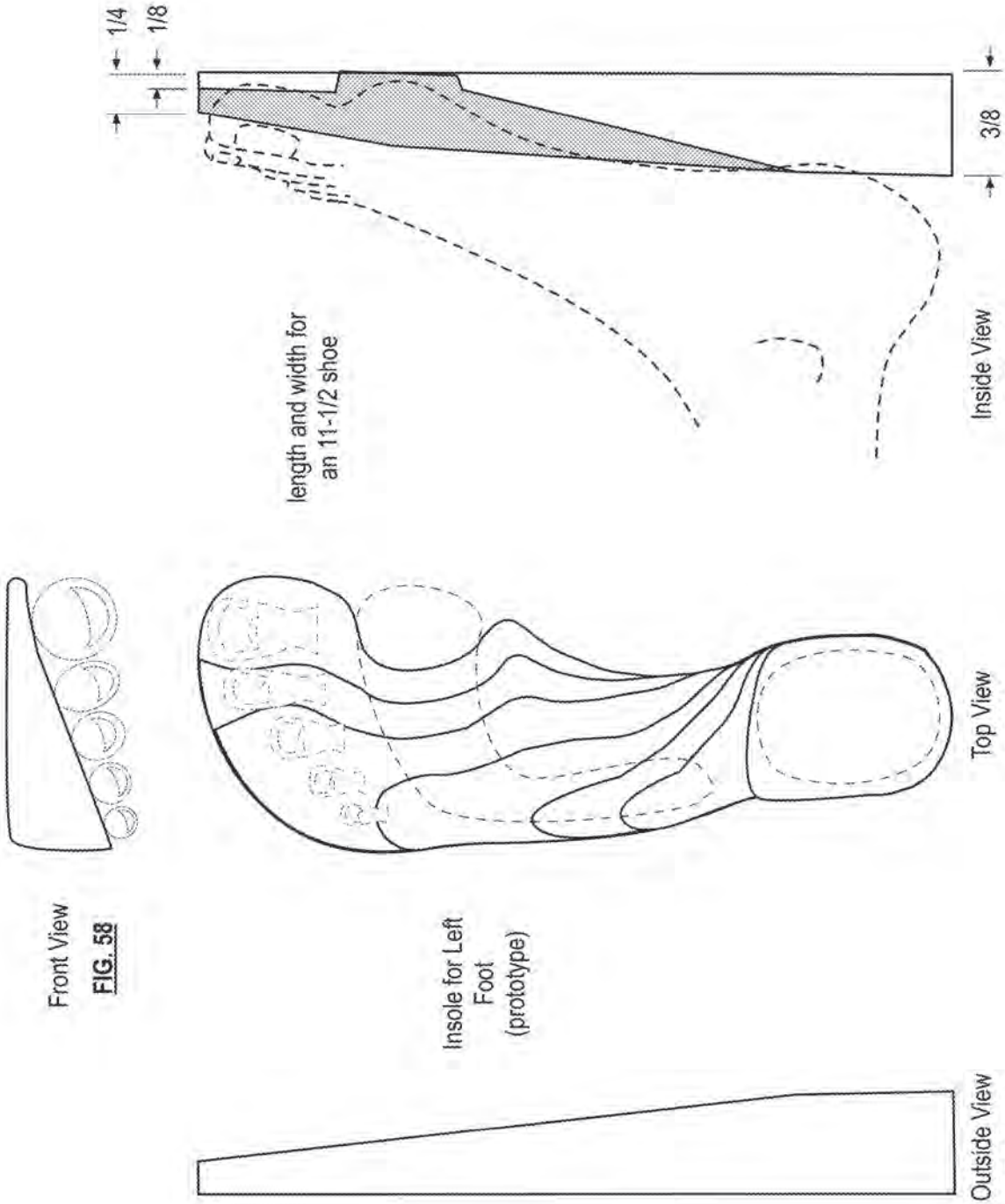
1/4
1/8
3/8
length and width for an 11-1/2 shoe
Inside View
FIG. 57
Top View
FIG. 56
Front View
FIG. 58
Insole for Left Foot (prototype)
Outside View
FIG. 55

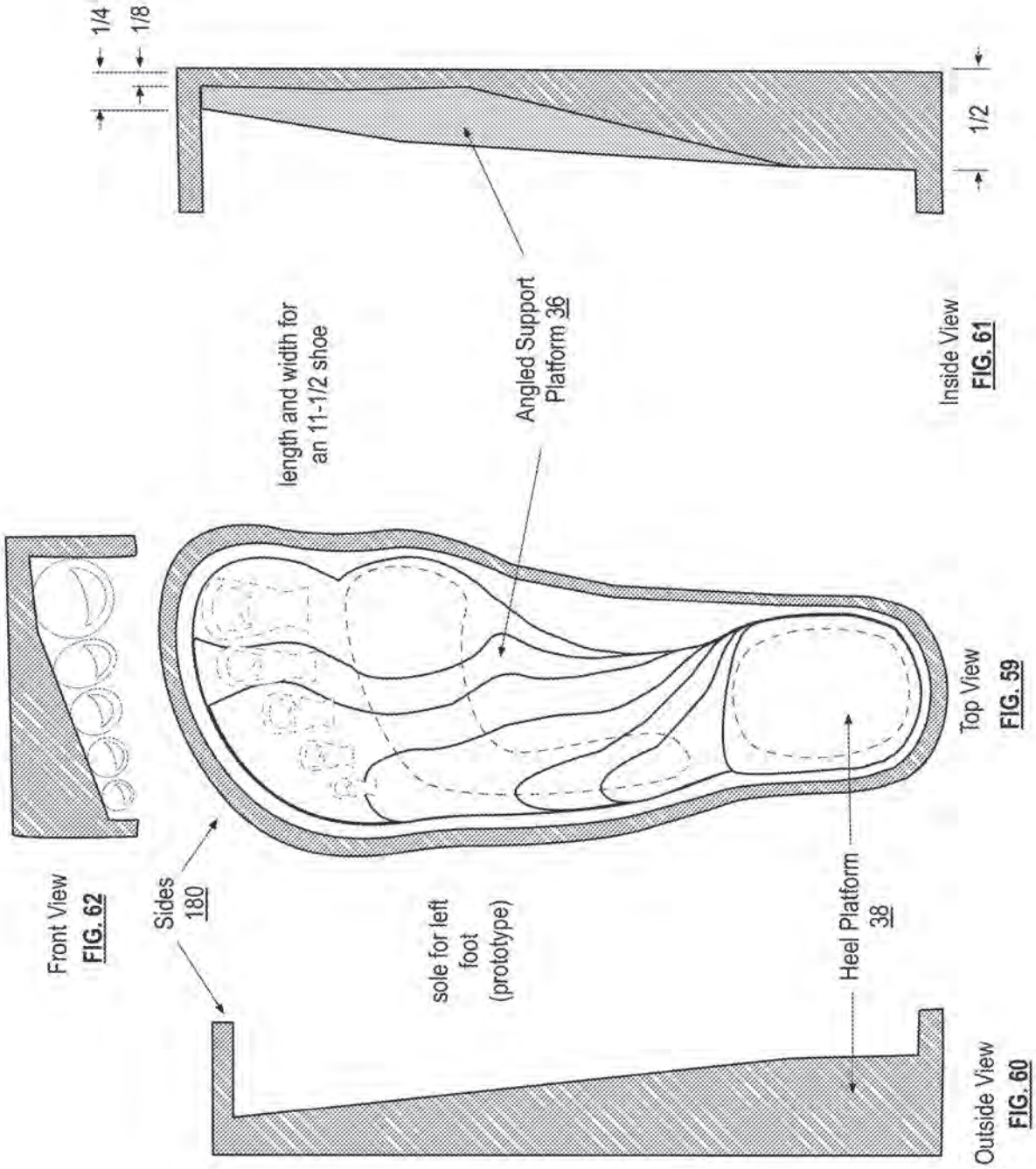
1/4
1/8
1/2
Angled Support Platform 36
Inside View
FIG. 61
length and width for an 11-1/2 shoe
Top View
FIG. 59
Front View
FIG. 62
Sides 180
sole for left foot (prototype)
Heel Platform 38
Outside View
FIG. 60

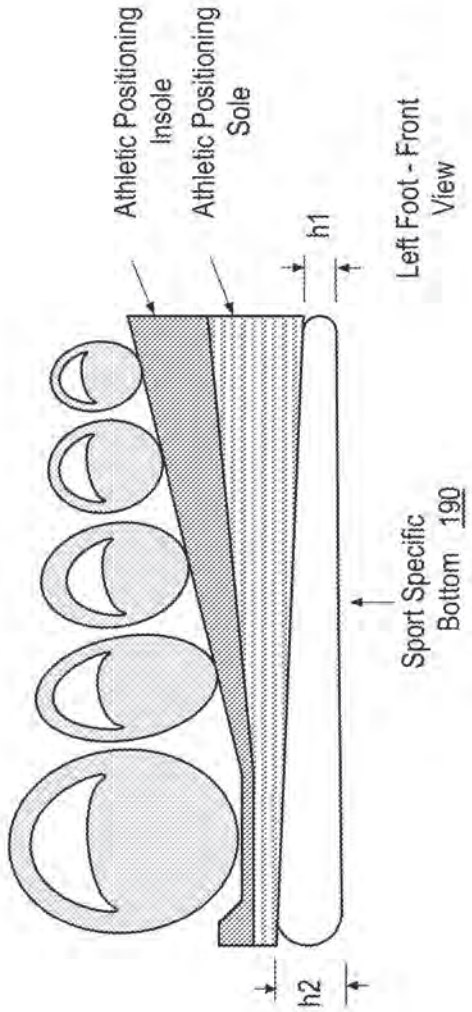
Athletic Positioning Insole
Athletic Positioning Sole
h1
Left Foot - Front View
Sport Specific Bottom 190
h2

FIG. 63

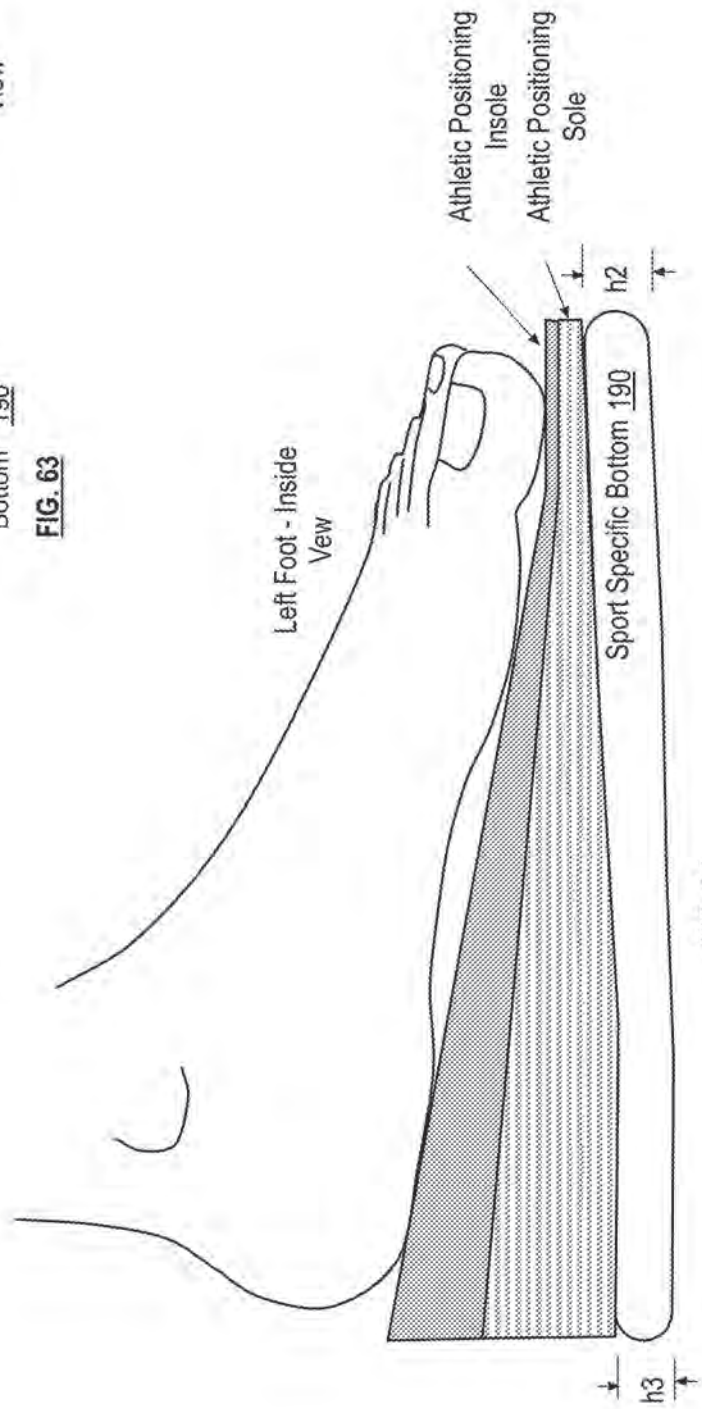
Athletic Positioning Insole
Athletic Positioning Sole
h2
Left Foot - Inside Vew
Sport Specific Bottom 190
h3

FIG. 64

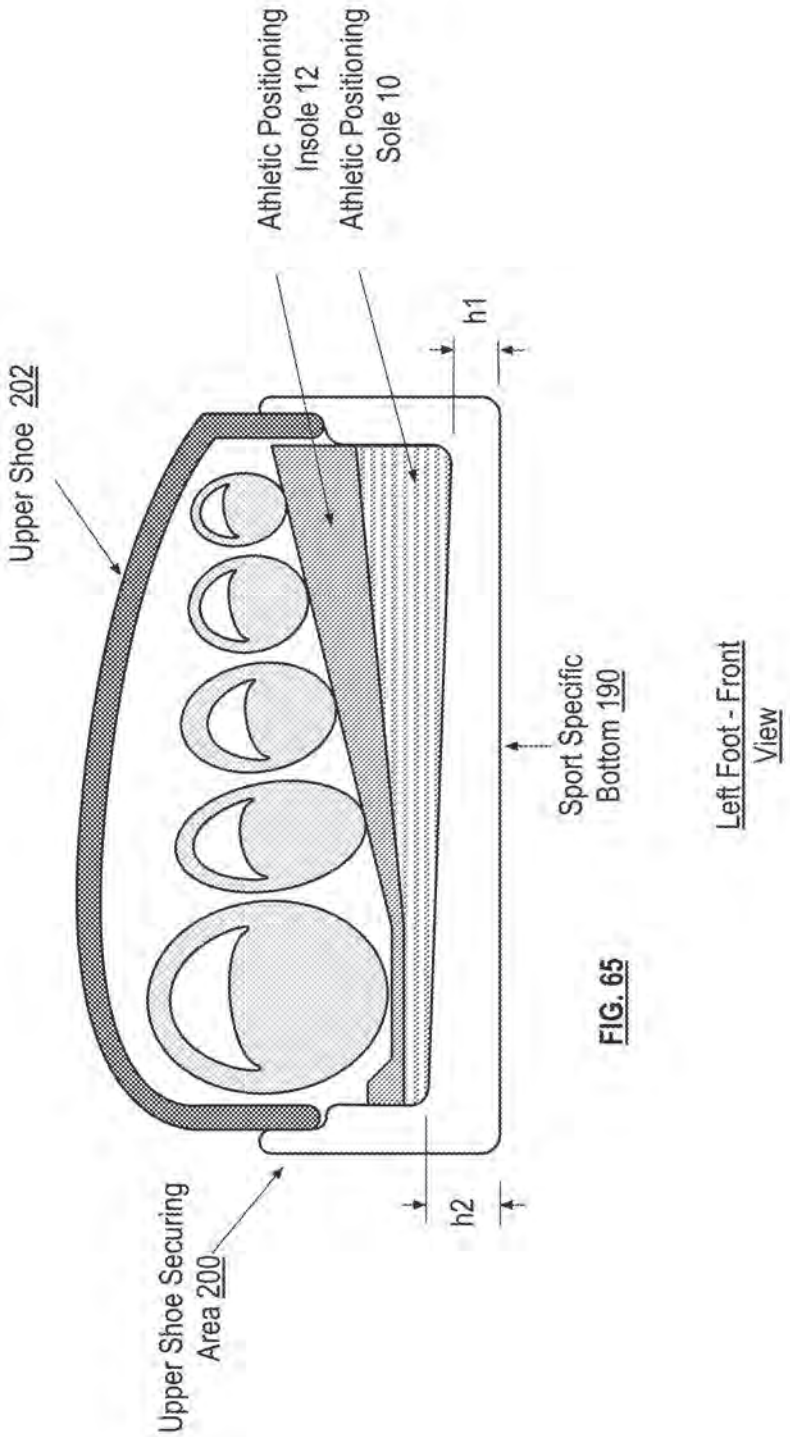
Upper Shoe 202
Athletic Positioning Insole 12
Athletic Positioning Sole 10
h1
h2
Sport Specific Bottom 190
Upper Shoe Securing Area 200
Left Foot - Front View

FIG. 65

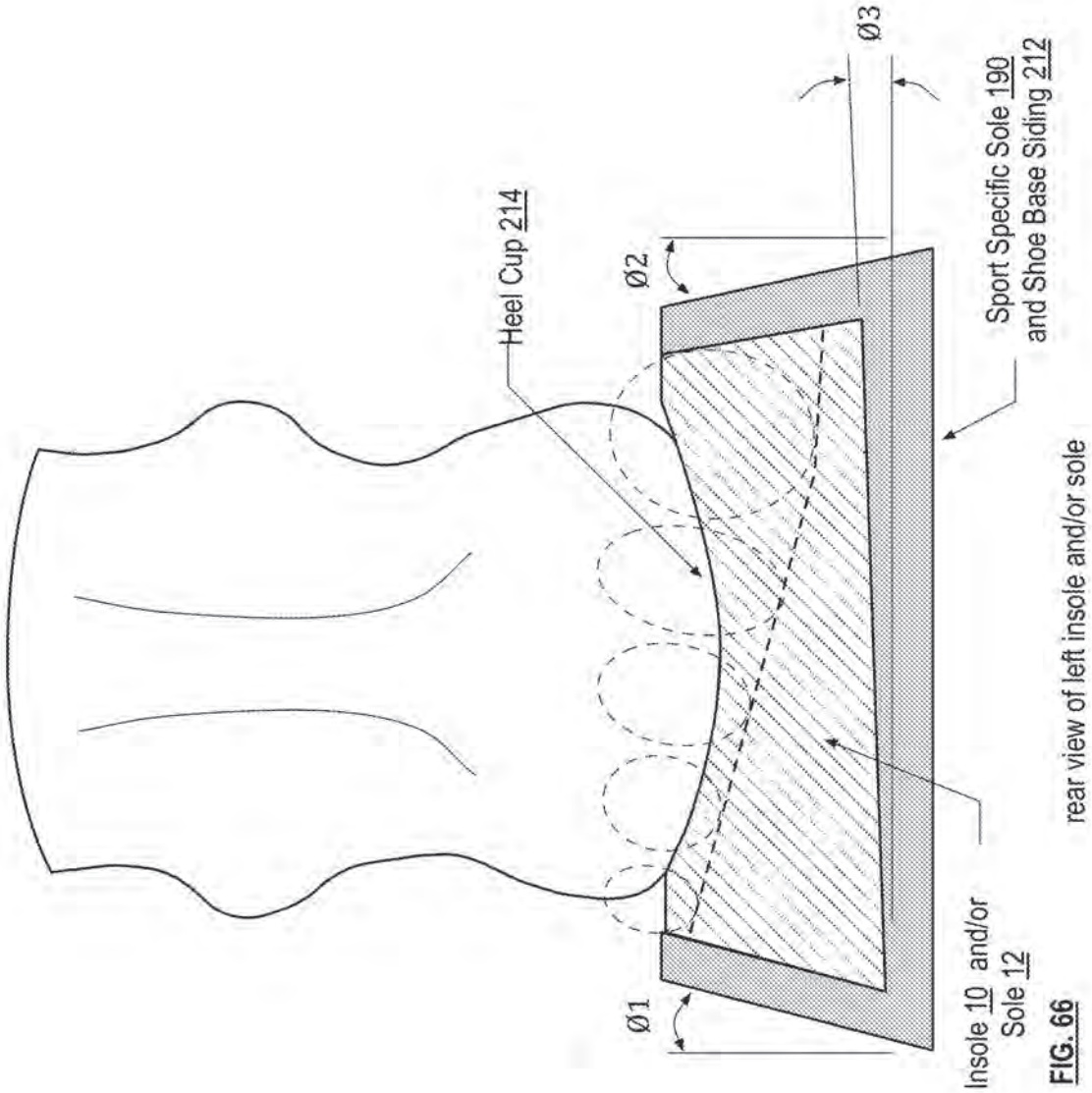
Heel Cup 214
Ø1
Ø2
Ø3
Sport Specific Sole 190
and Shoe Base Siding 212
Insole 10 and/or
Sole 12
rear view of left insole and/or sole

FIG. 66

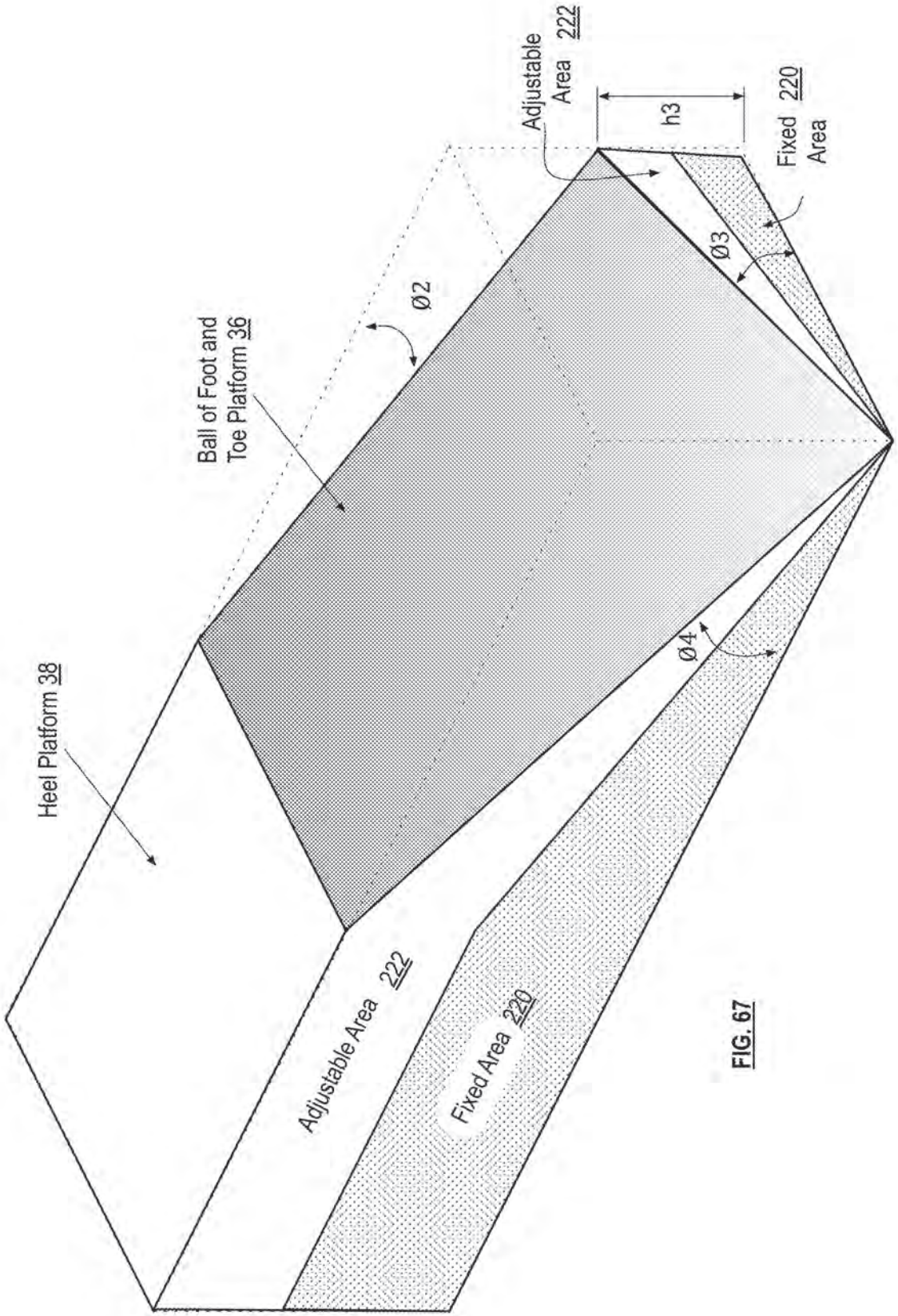
Heel Platform 38
Ball of Foot and Toe Platform 36
Ø2
Adjustable Area 222
h3
Fixed 220 Area
Ø3
Ø4
Adjustable Area 222
Fixed Area 220

FIG. 67

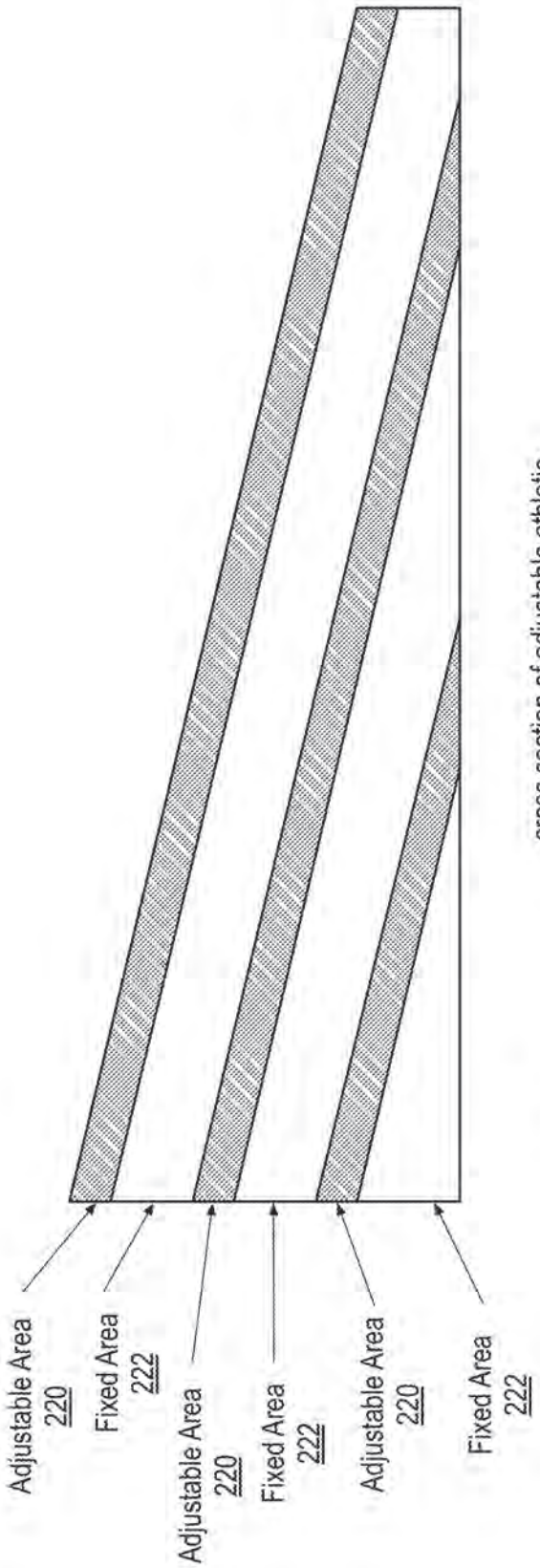

cross section of adjustable athletic positioning insole and/or sole

FIG. 68

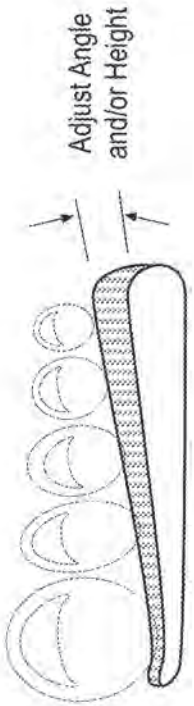

Front View of Left Adjustable Toe Area 234

FIG. 70

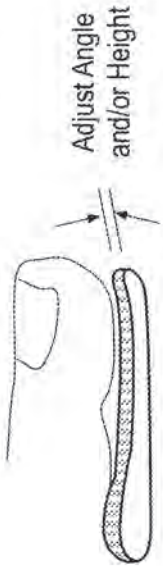

Side View of Left Adjustable Toe Area 234

FIG. 71

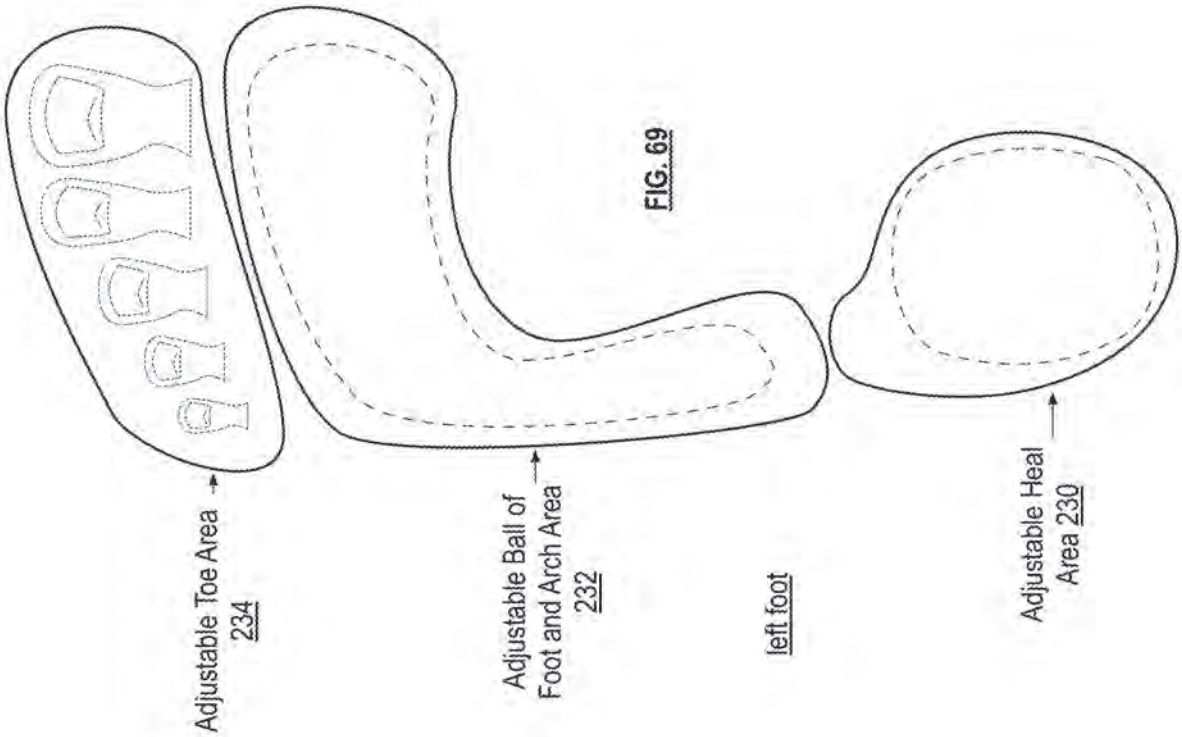

FIG. 69

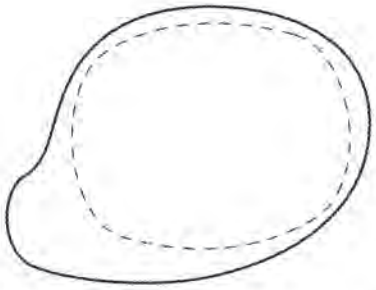

Top View
FIG. 75

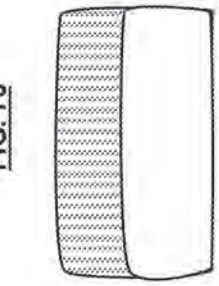

Bottom View
FIG. 76

FIG. 74
Inside View

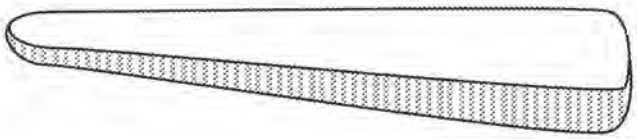

FIG. 73
Front View

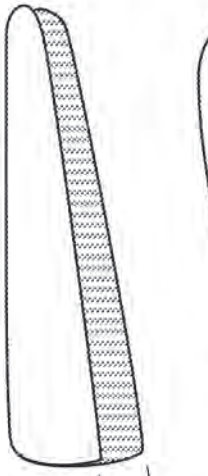

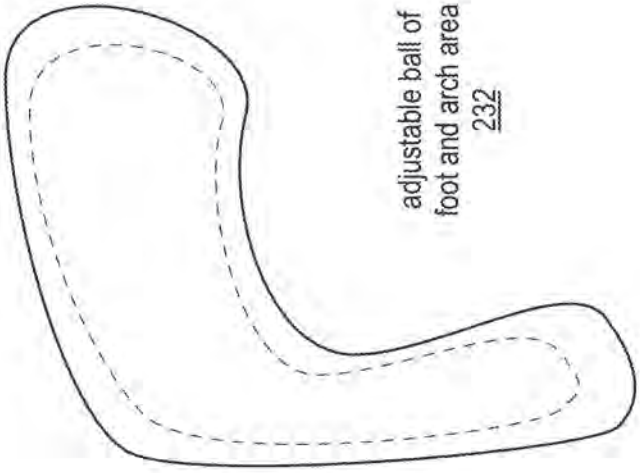

Top View
FIG. 72

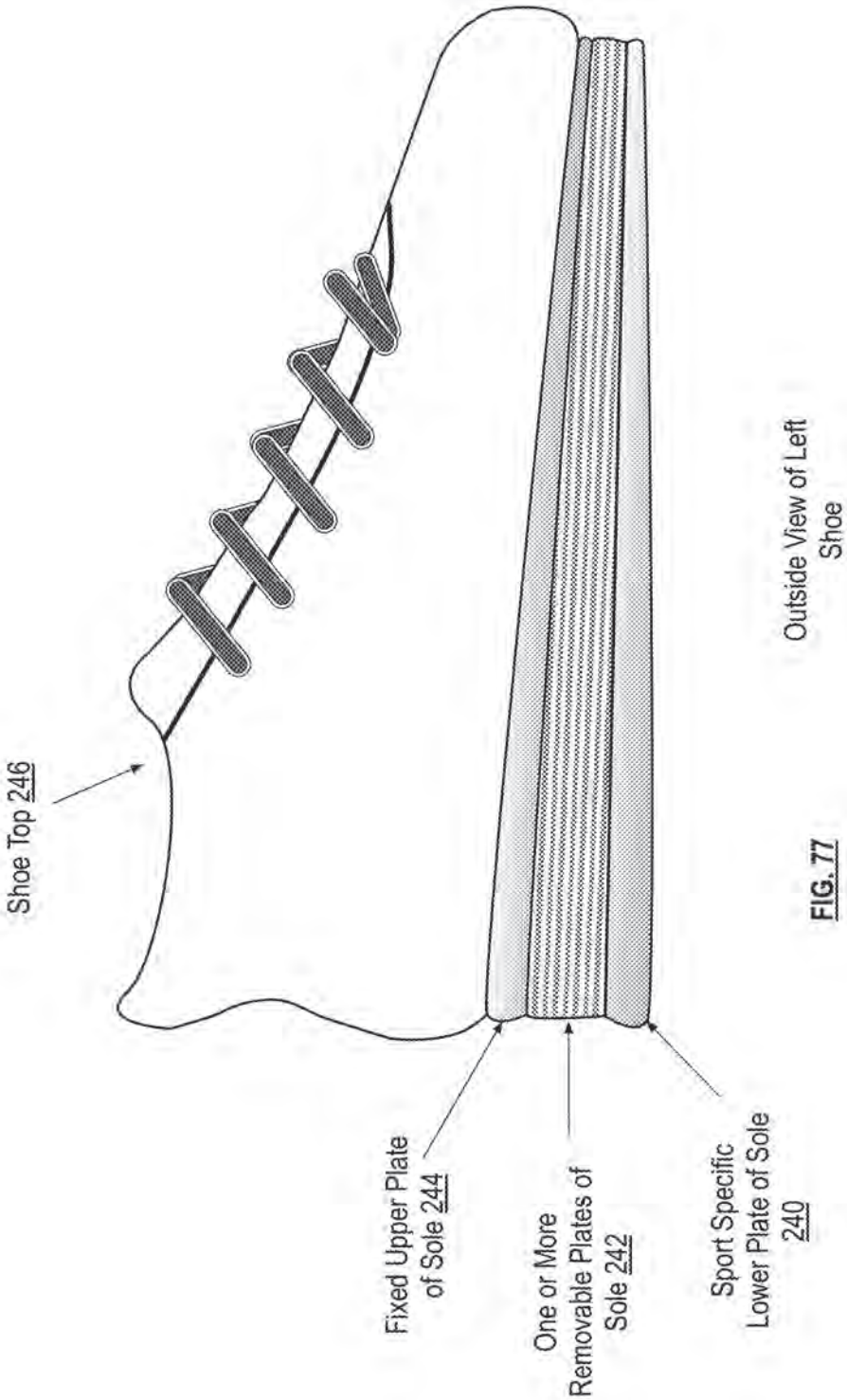

Outside View of Left Shoe

FIG. 77

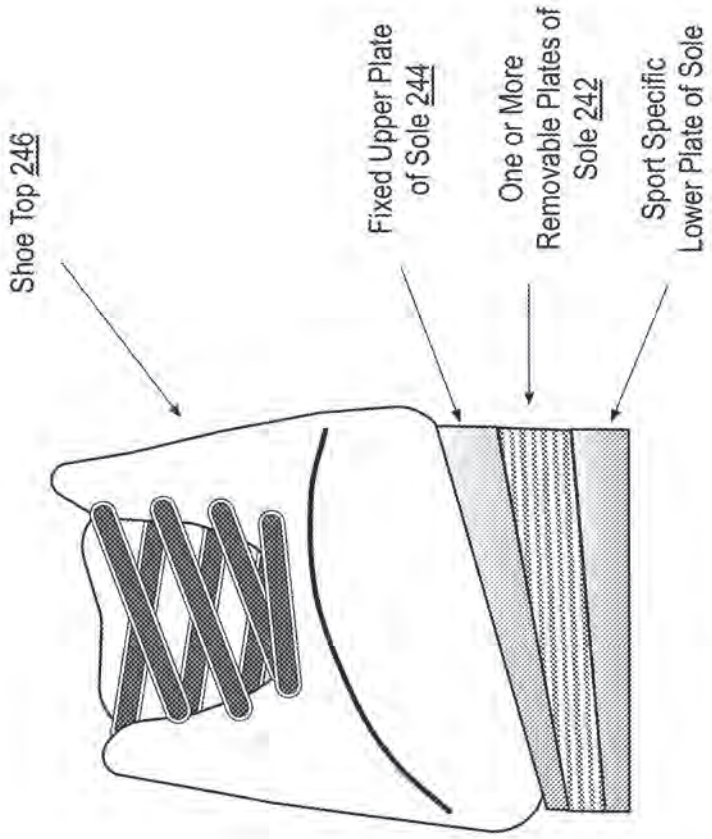

Front View of Left Shoe

FIG. 78

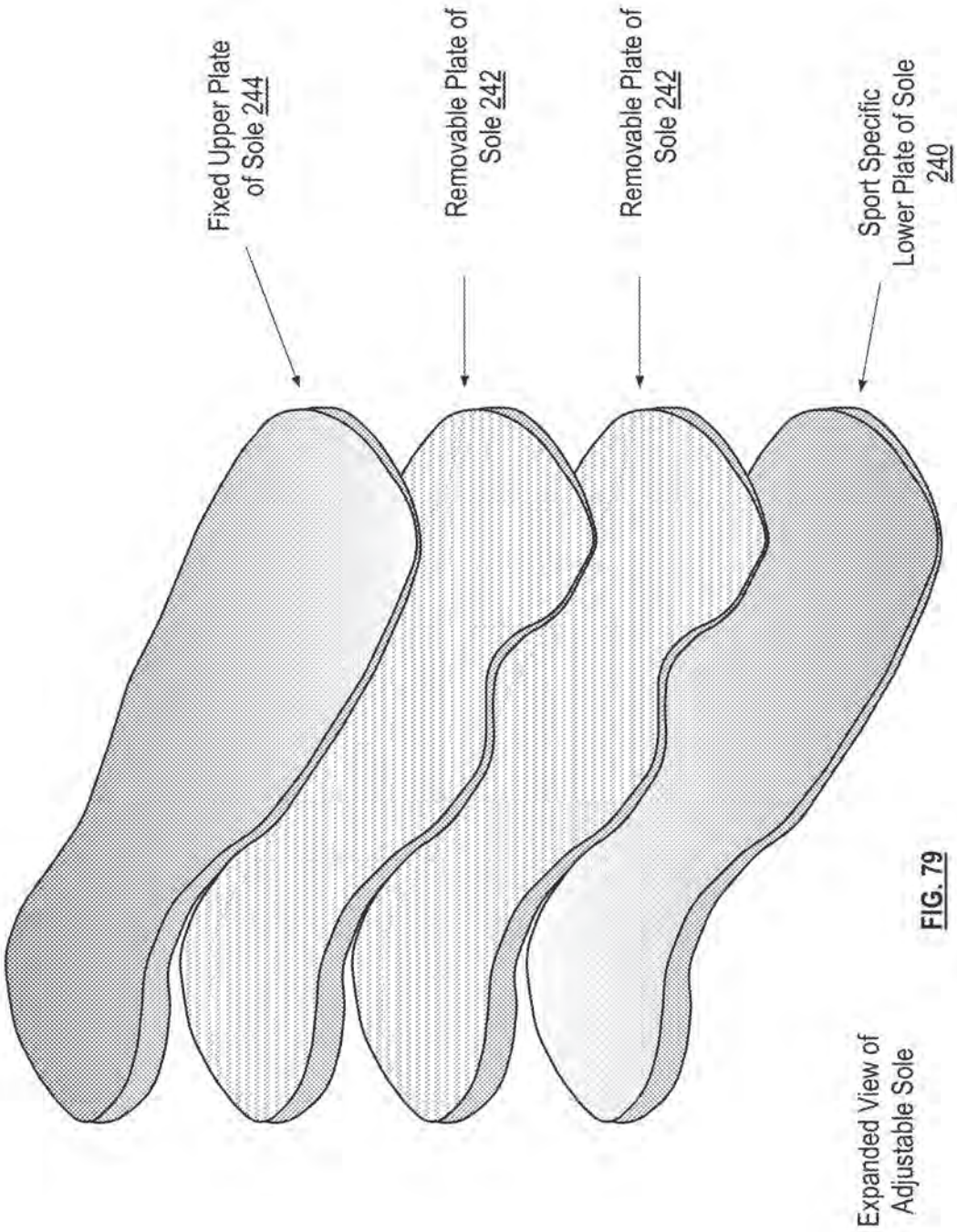
Fixed Upper Plate of Sole 244
Removable Plate of Sole 242
Removable Plate of Sole 242
Sport Specific Lower Plate of Sole 240
Expanded View of Adjustable Sole

FIG. 79

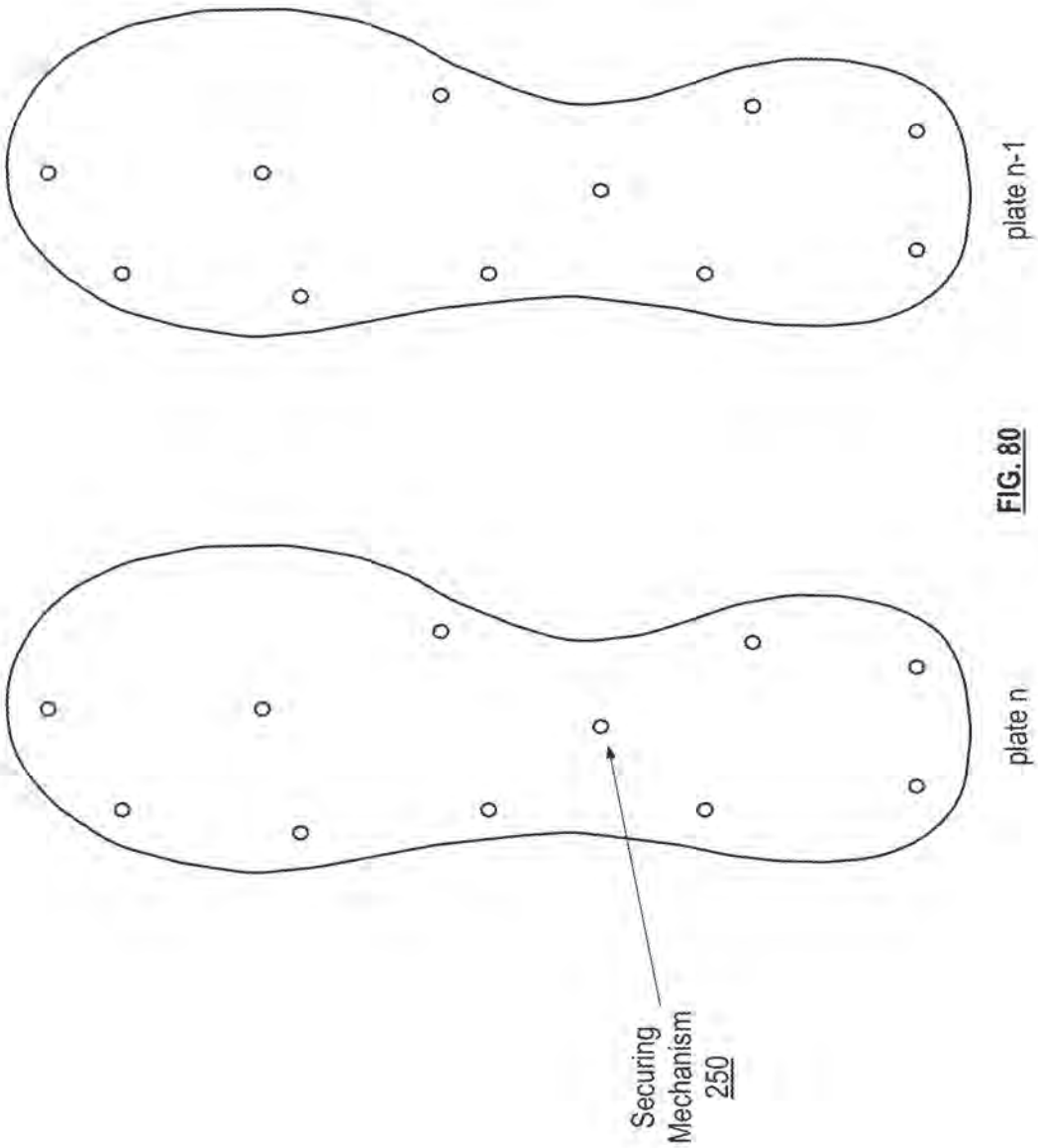

FIG. 80

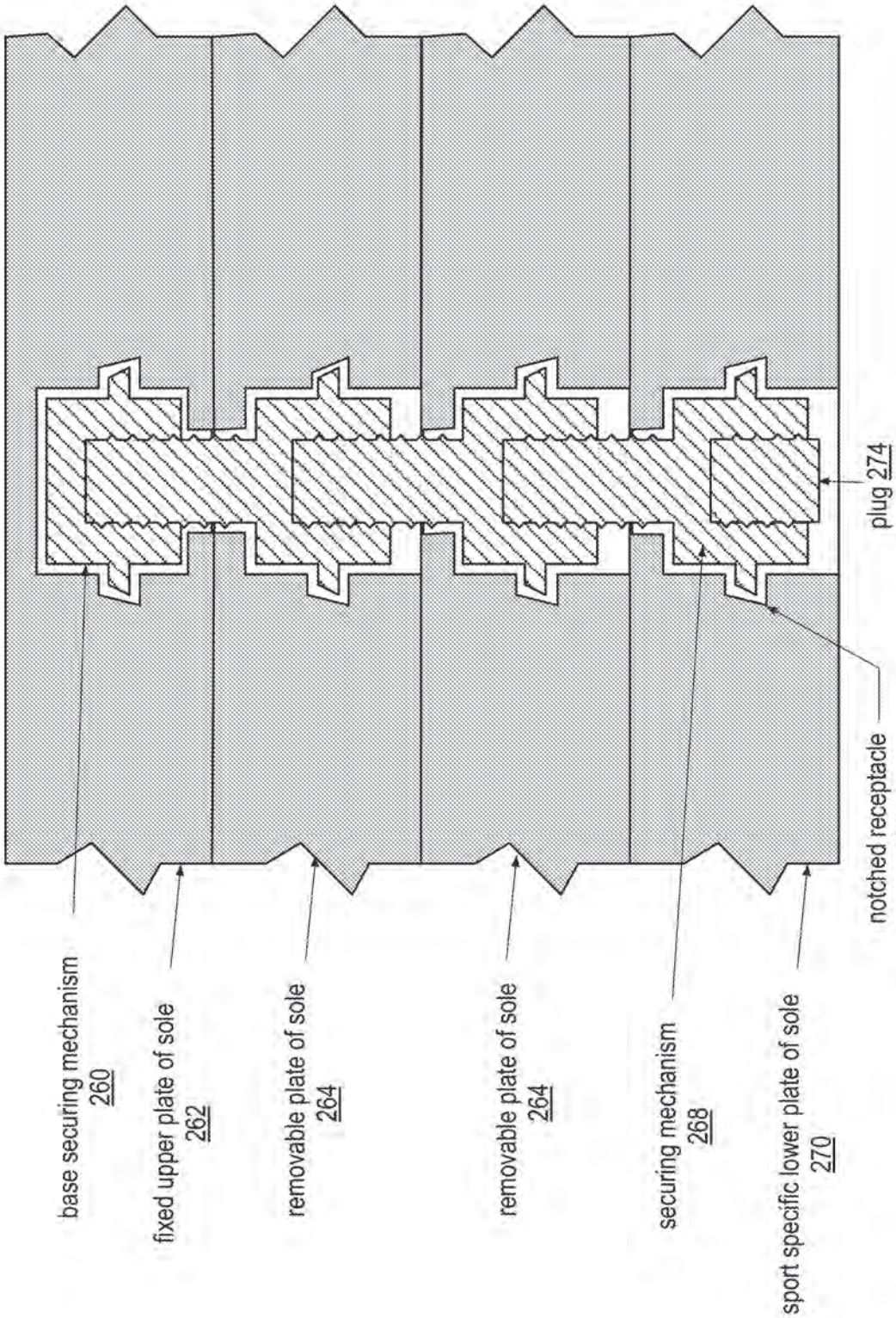
base securing mechanism 260
fixed upper plate of sole 262
removable plate of sole 264
removable plate of sole 264
securing mechanism 268
sport specific lower plate of sole 270
notched receptacle 272
plug 274

FIG. 81

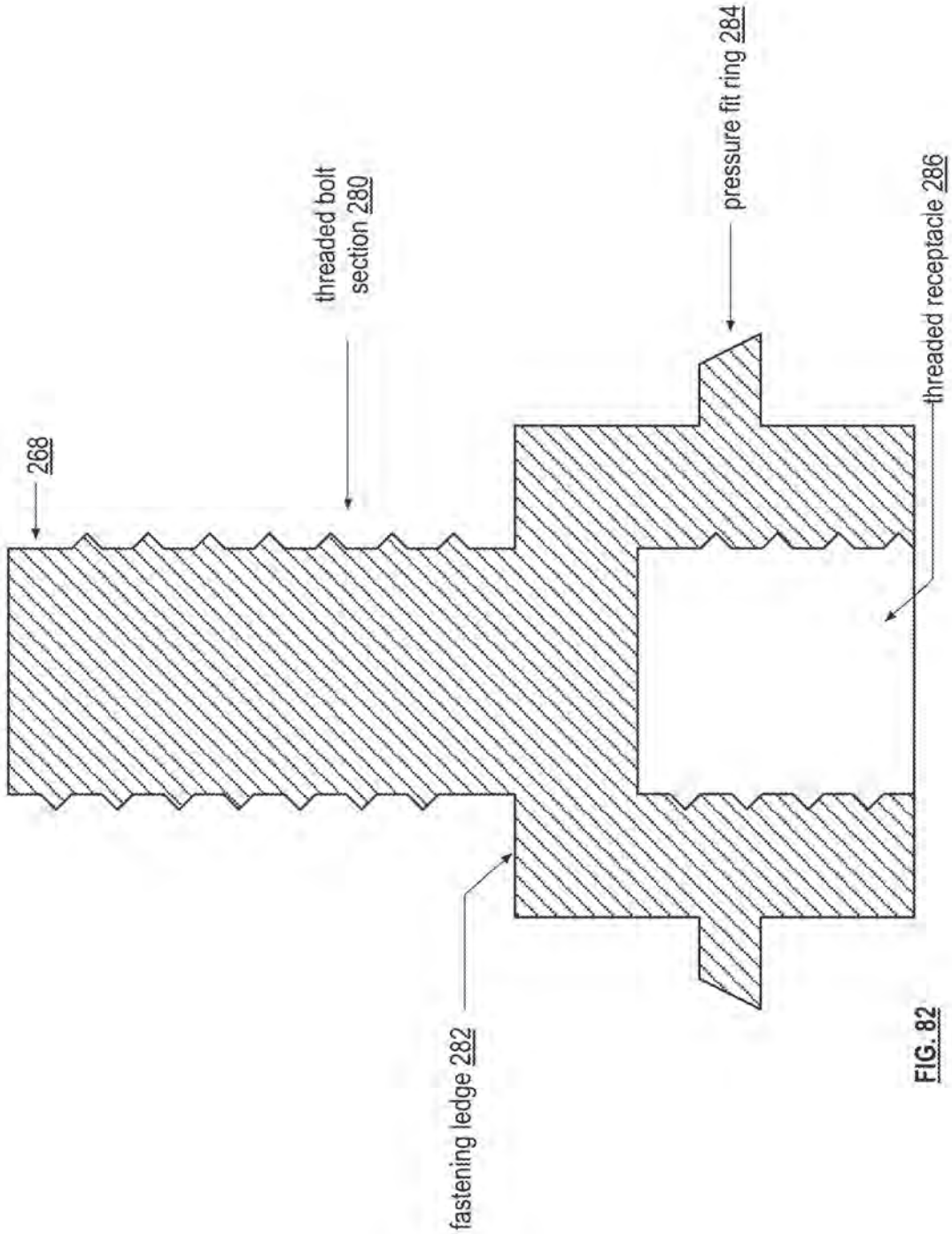
268
threaded bolt section 280
fastening ledge 282
pressure fit ring 284
threaded receptacle 286

FIG. 82

keyhole receptacle 290
bottom view

FIG. 84

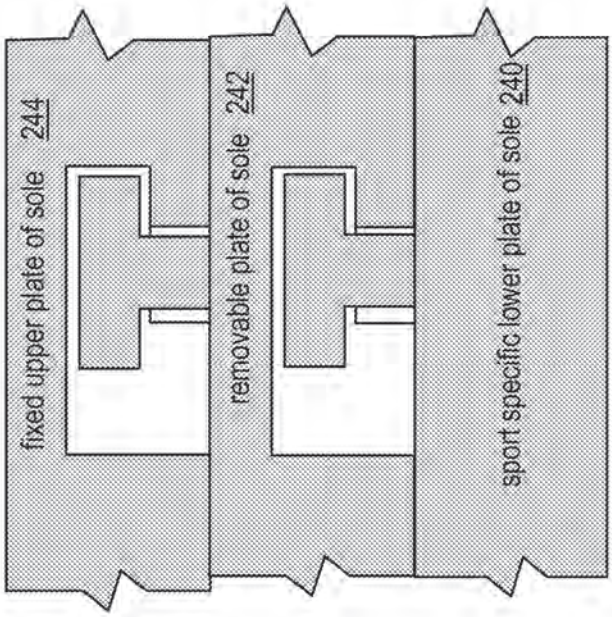

FIG. 85

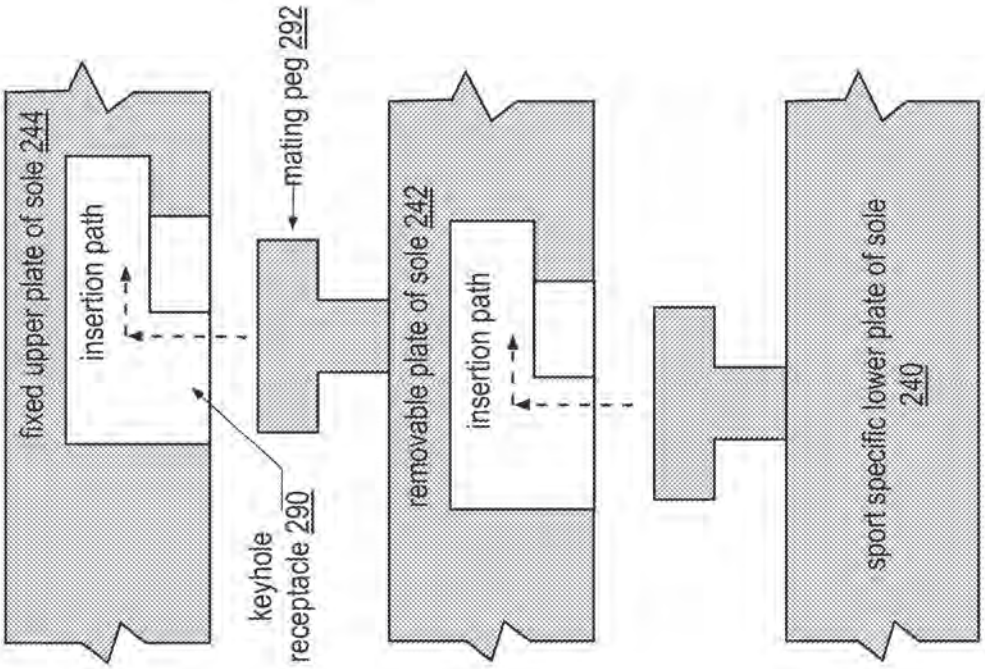

securing mechanism 268

FIG. 83

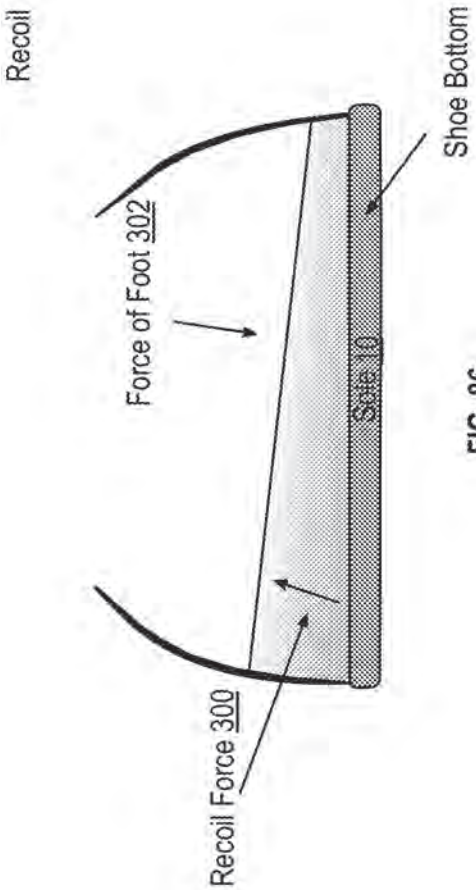
Recoil
Force of Foot 302
Shoe Bottom
Sole 10
Recoil Force 300

FIG. 86

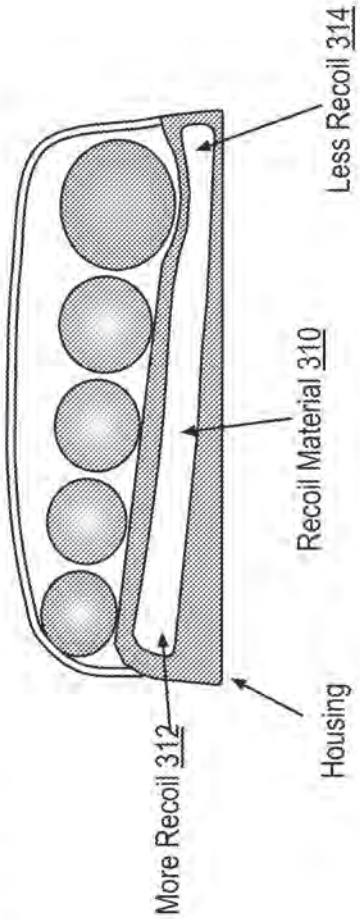
Less Recoil 314
Recoil Material 310
Housing
More Recoil 312

FIG.87

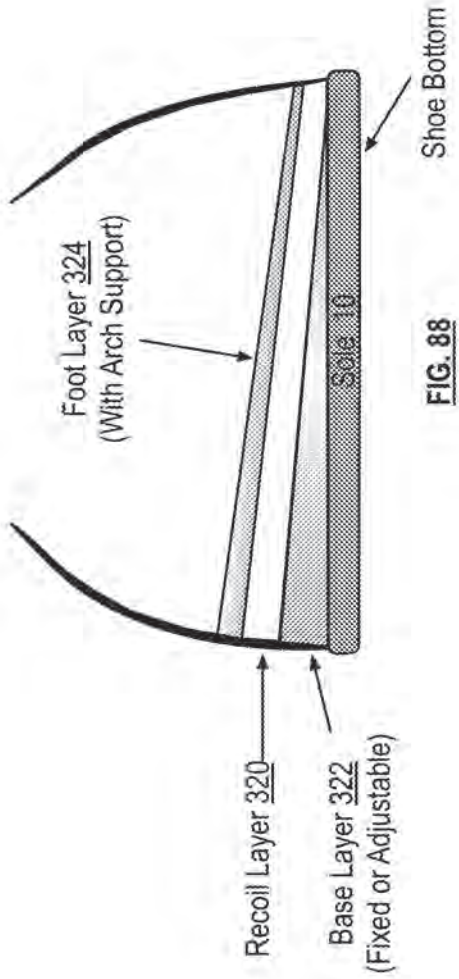
Foot Layer 324
(With Arch Support)
Recoil Layer 320
Base Layer 322
(Fixed or Adjustable)
Sole 10
Shoe Bottom

FIG. 88

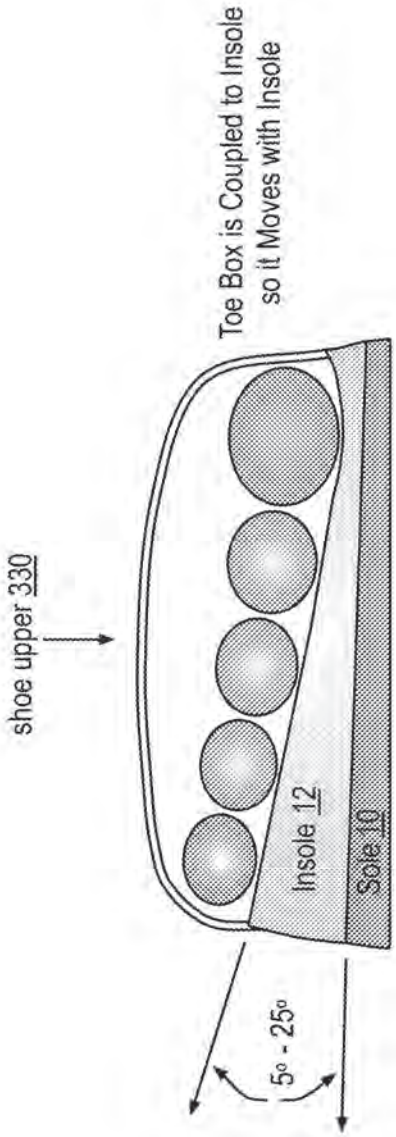
shoe upper 330
Toe Box is Coupled to Insole
so it Moves with Insole
Insole 12
Sole 10
5° - 25°

FIG. 89

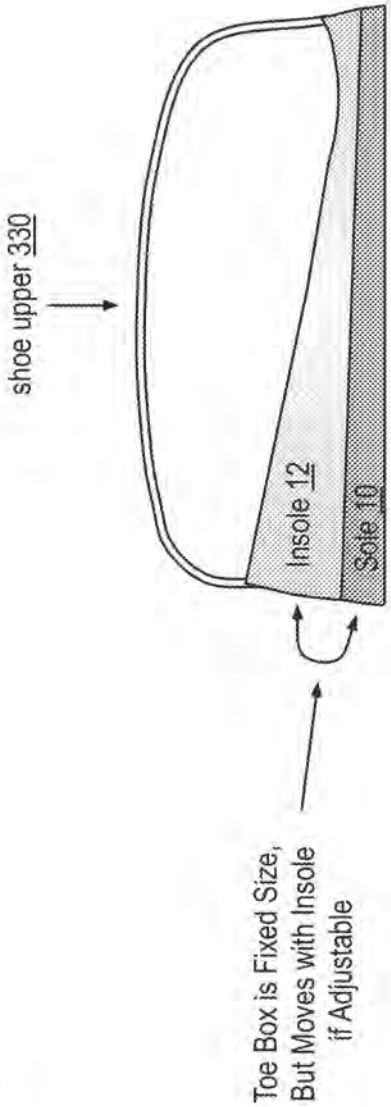
shoe upper 330
Insole 12
Sole 10
Toe Box is Fixed Size,
But Moves with Insole
if Adjustable

FIG. 90

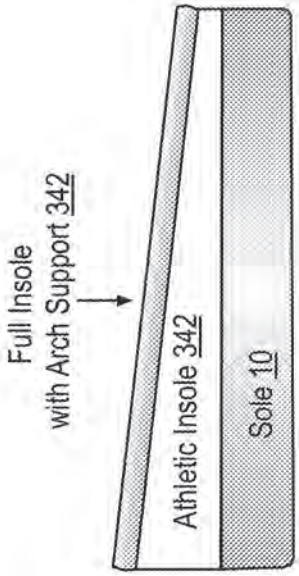
Full Insole
with Arch Support 342
Athletic Insole 342
Sole 10

FIG. 91

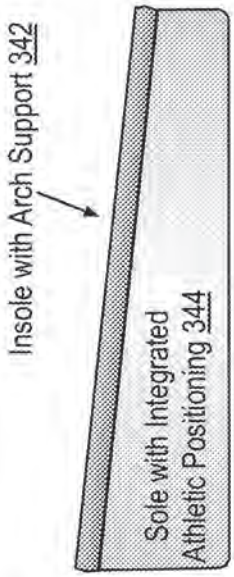
Insole with Arch Support 342
Sole with Integrated
Athletic Positioning 344

FIG. 92

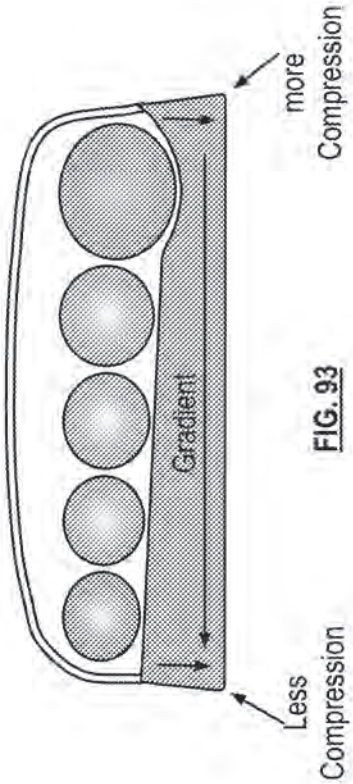
more
Compression
Gradient
Less
Compression

FIG. 93

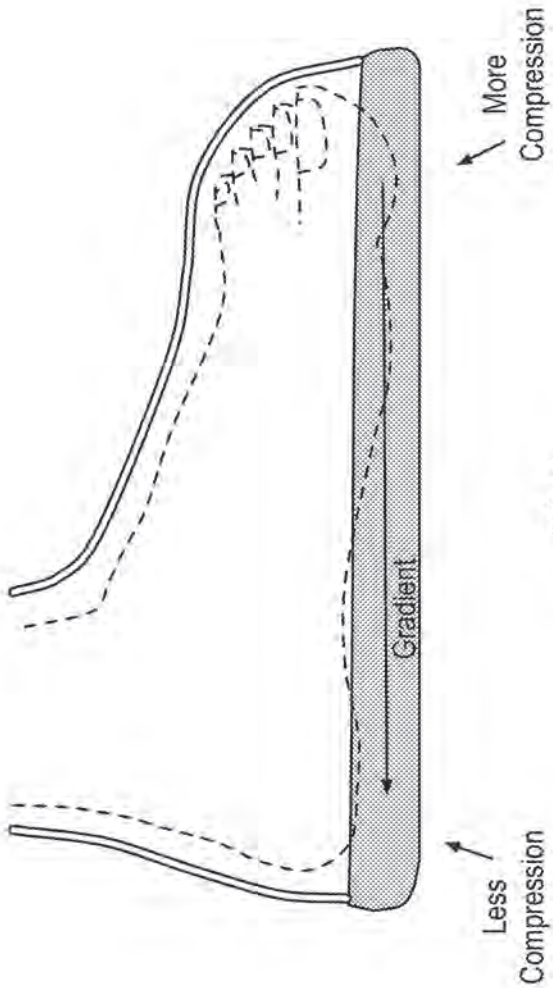
More
Compression
Gradient
Less
Compression

FIG. 94

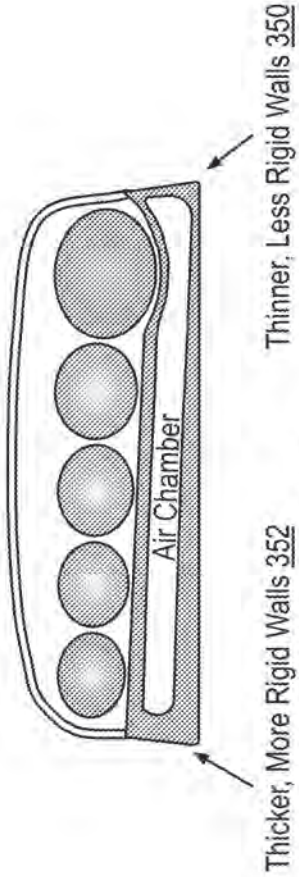
Thicker, More Rigid Walls 352
Air Chamber
Thinner, Less Rigid Walls 350

FIG. 95

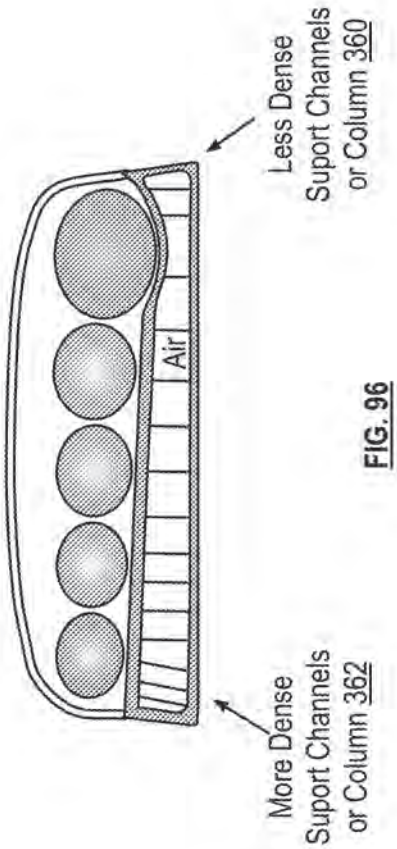
More Dense
Suport Channels
or Column 362
Air
Less Dense
Suport Channels
or Column 360

FIG. 96

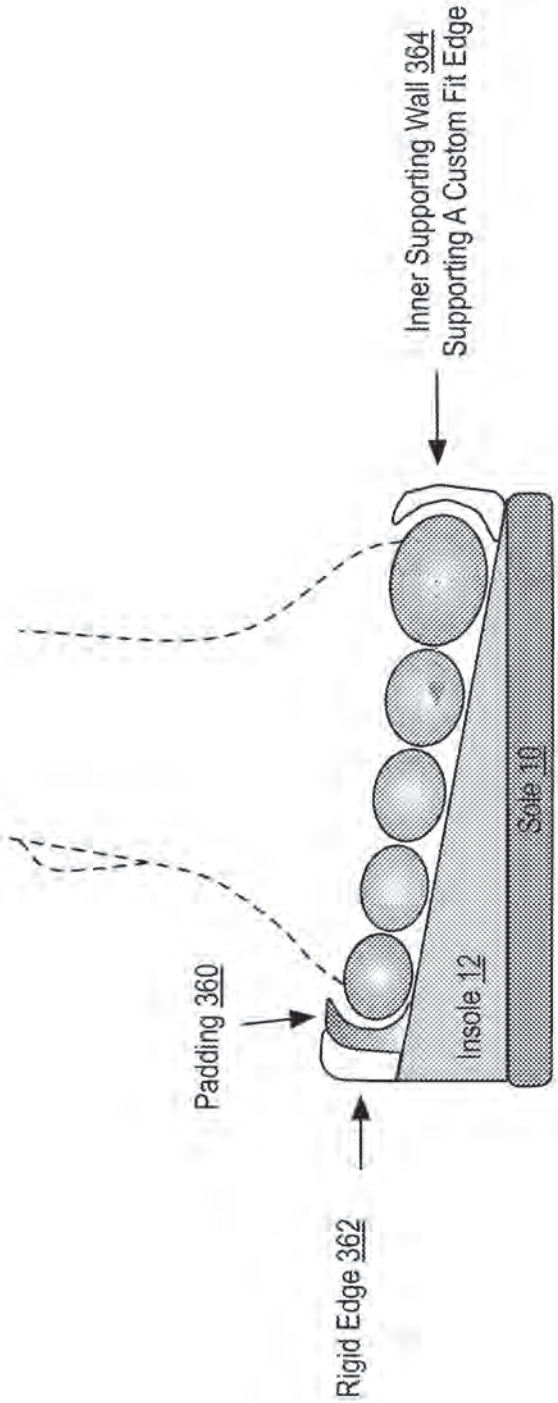
Rigid Edge 362
Padding 360
Insole 12
Sole 10
Inner Supporting Wall 364
Supporting A Custom Fit Edge

FIG. 97

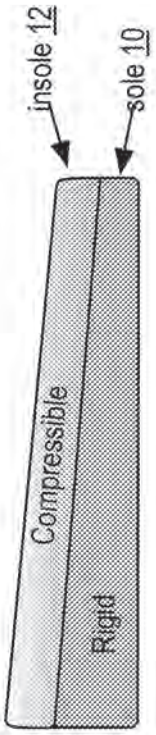
insole 12
sole 10
Compressible
Rigid

FIG. 98

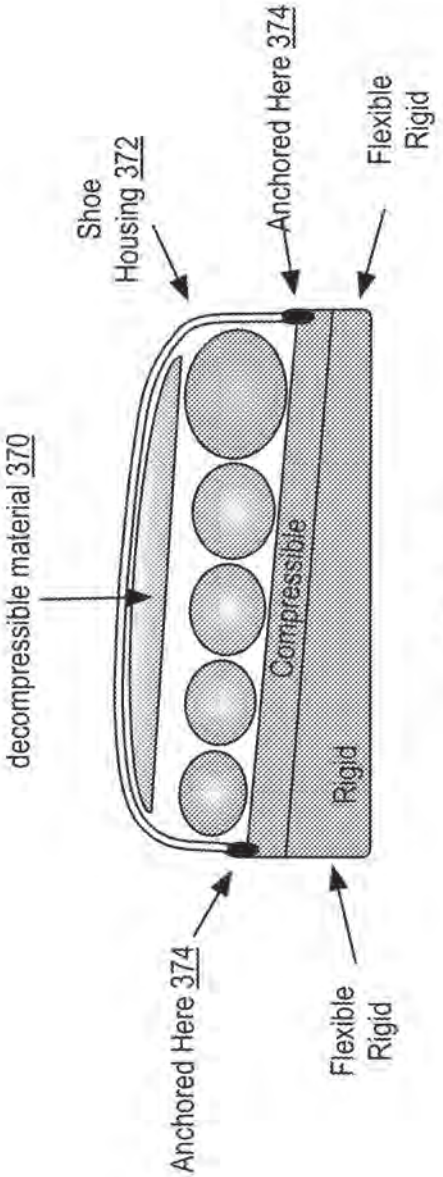
Shoe Housing 372
Anchored Here 374
Flexible Rigid
decompressible material 370
Compressible
Rigid
Anchored Here 374
Flexible Rigid

FIG. 99

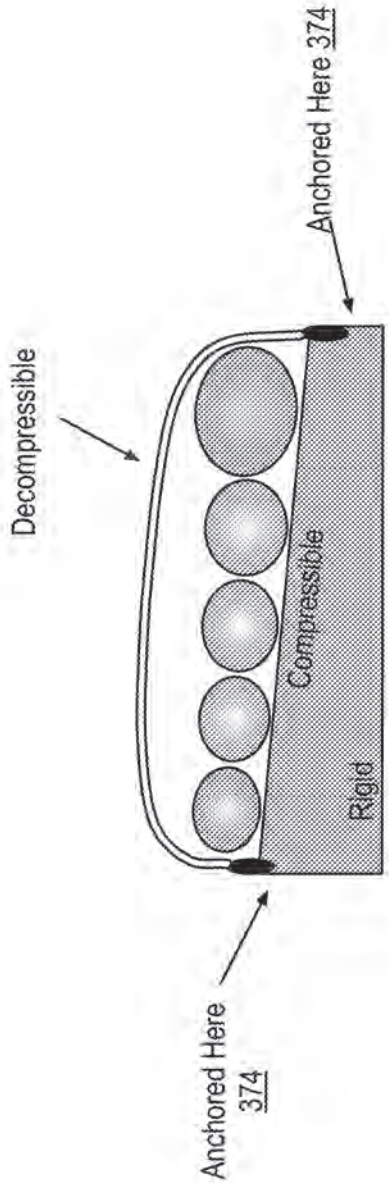

FIG. 100

Sole Front Cross Sectional View

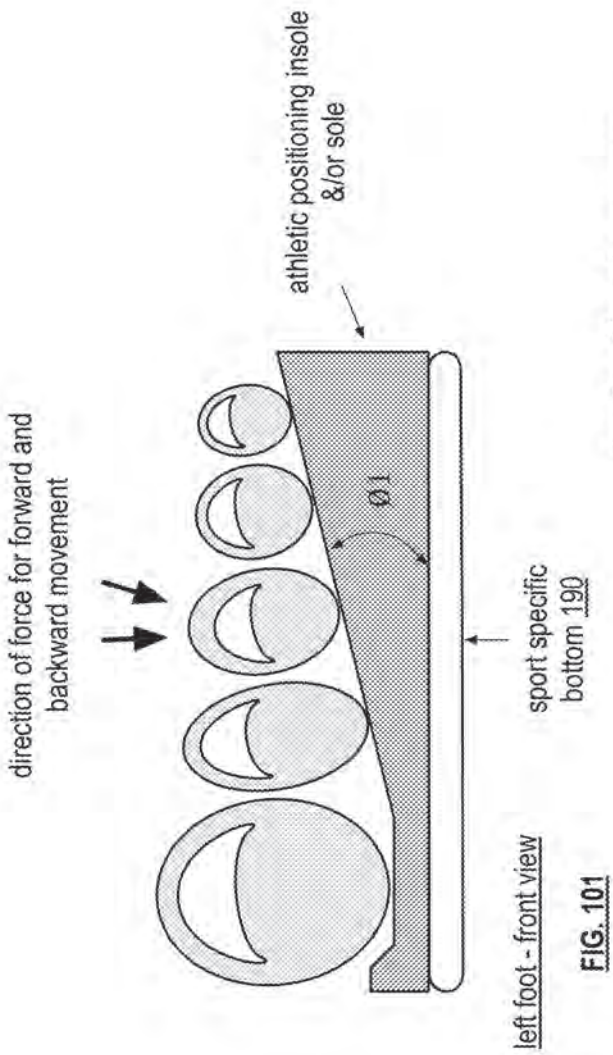

left foot - front view

FIG. 101

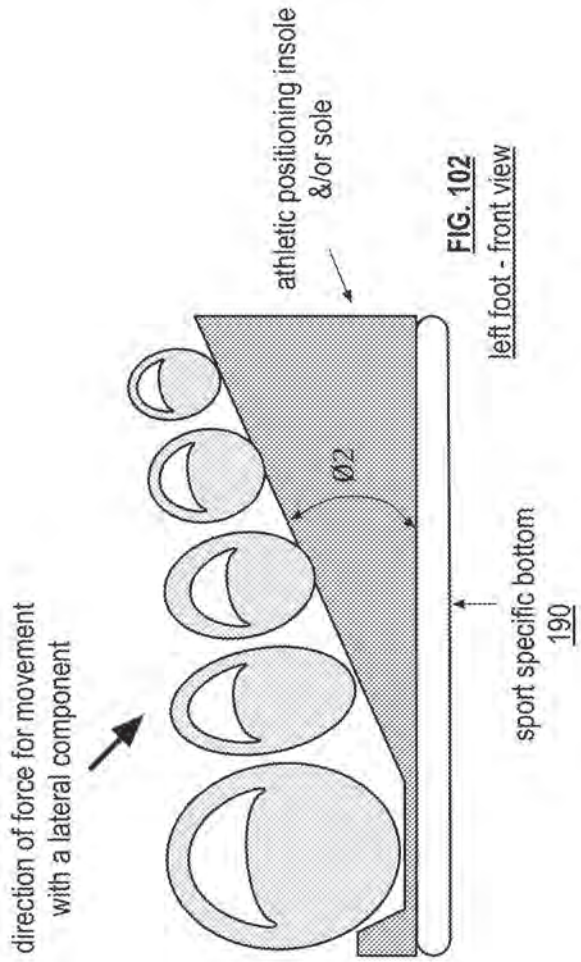

FIG. 102

left foot - front view

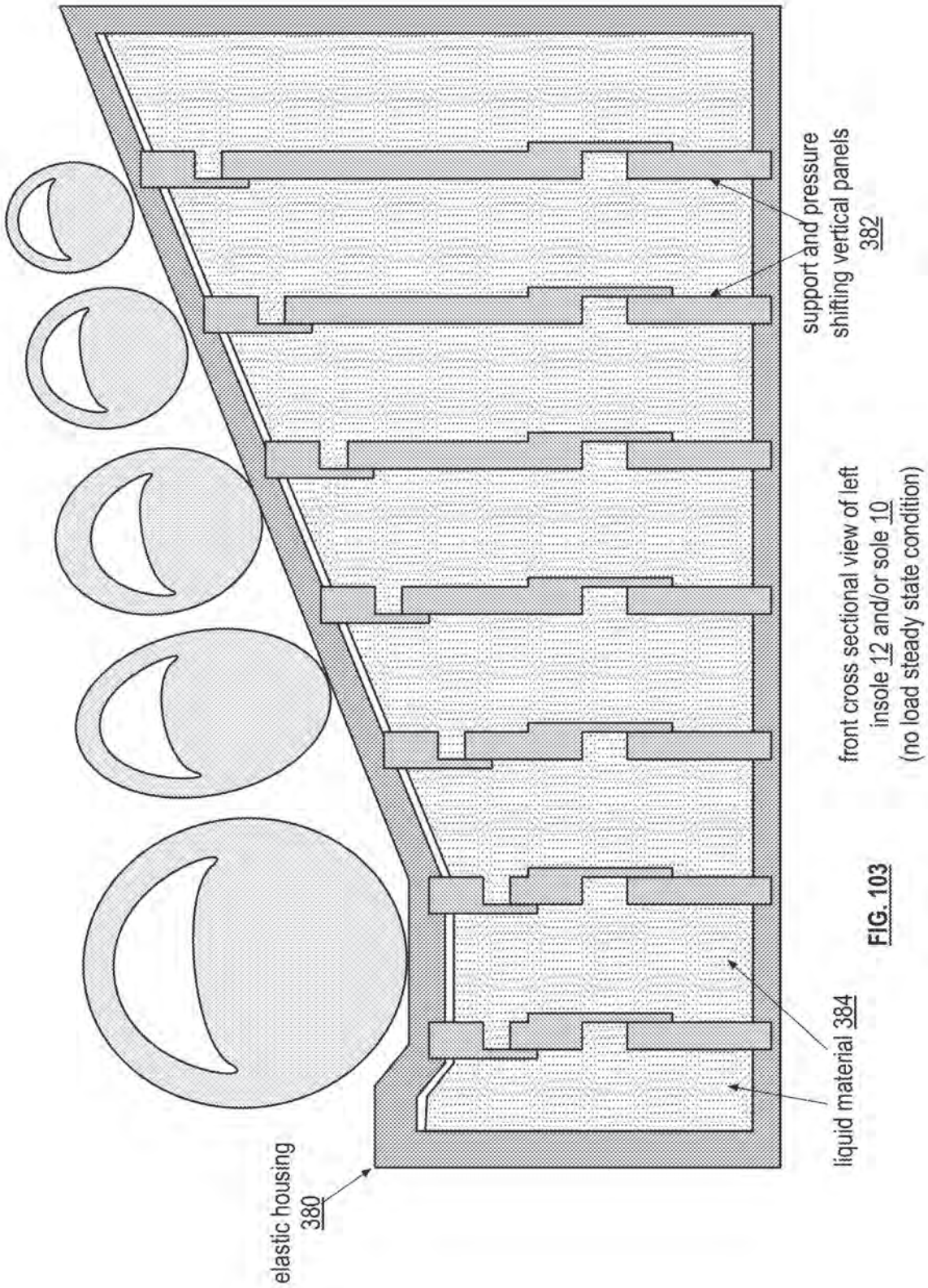
support and pressure shifting vertical panels 382
front cross sectional view of left insole 12 and/or sole 10 (no load steady state condition)
liquid material 384
elastic housing 380

FIG. 103

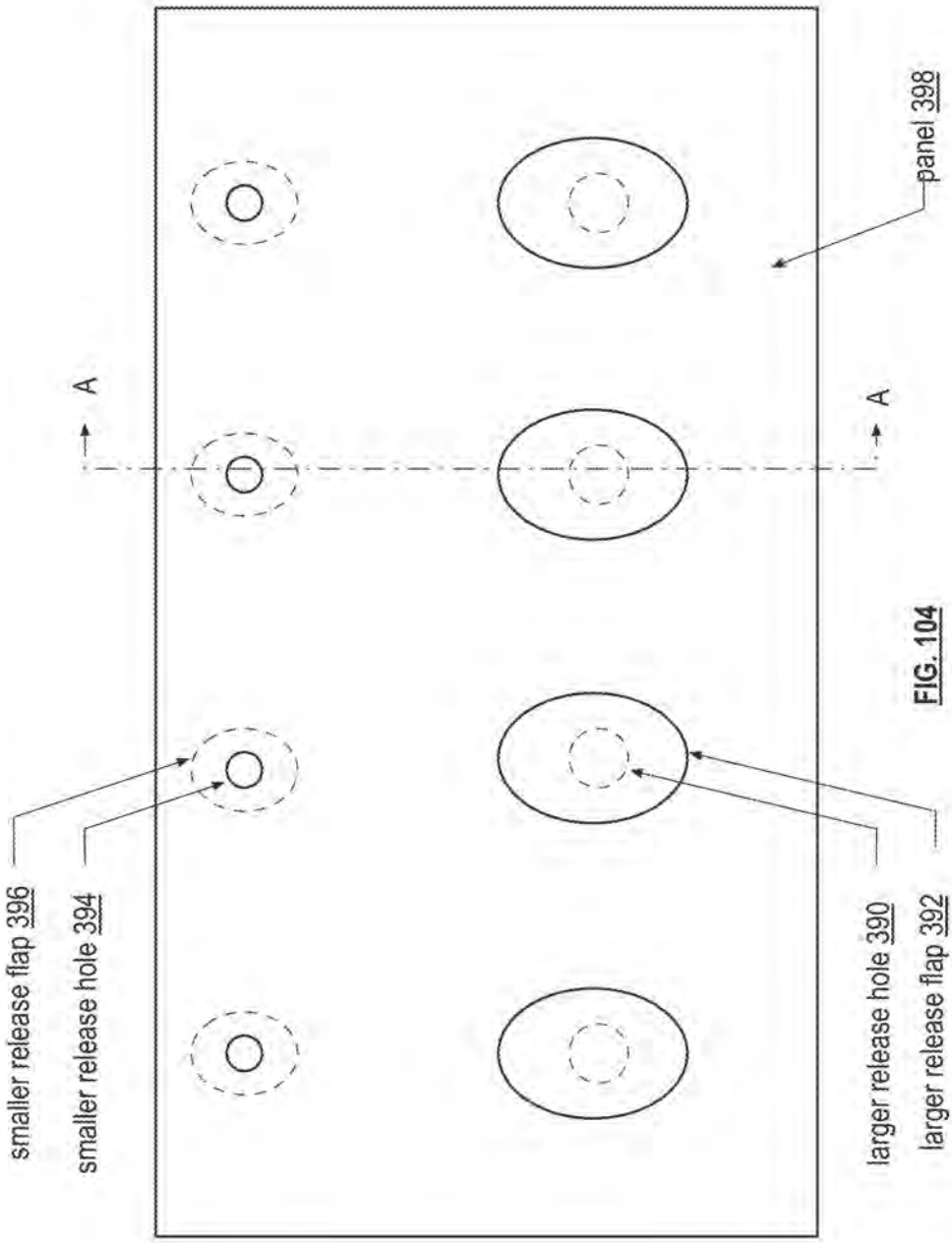

FIG. 104

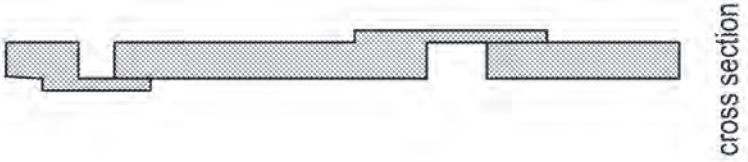

FIG. 105

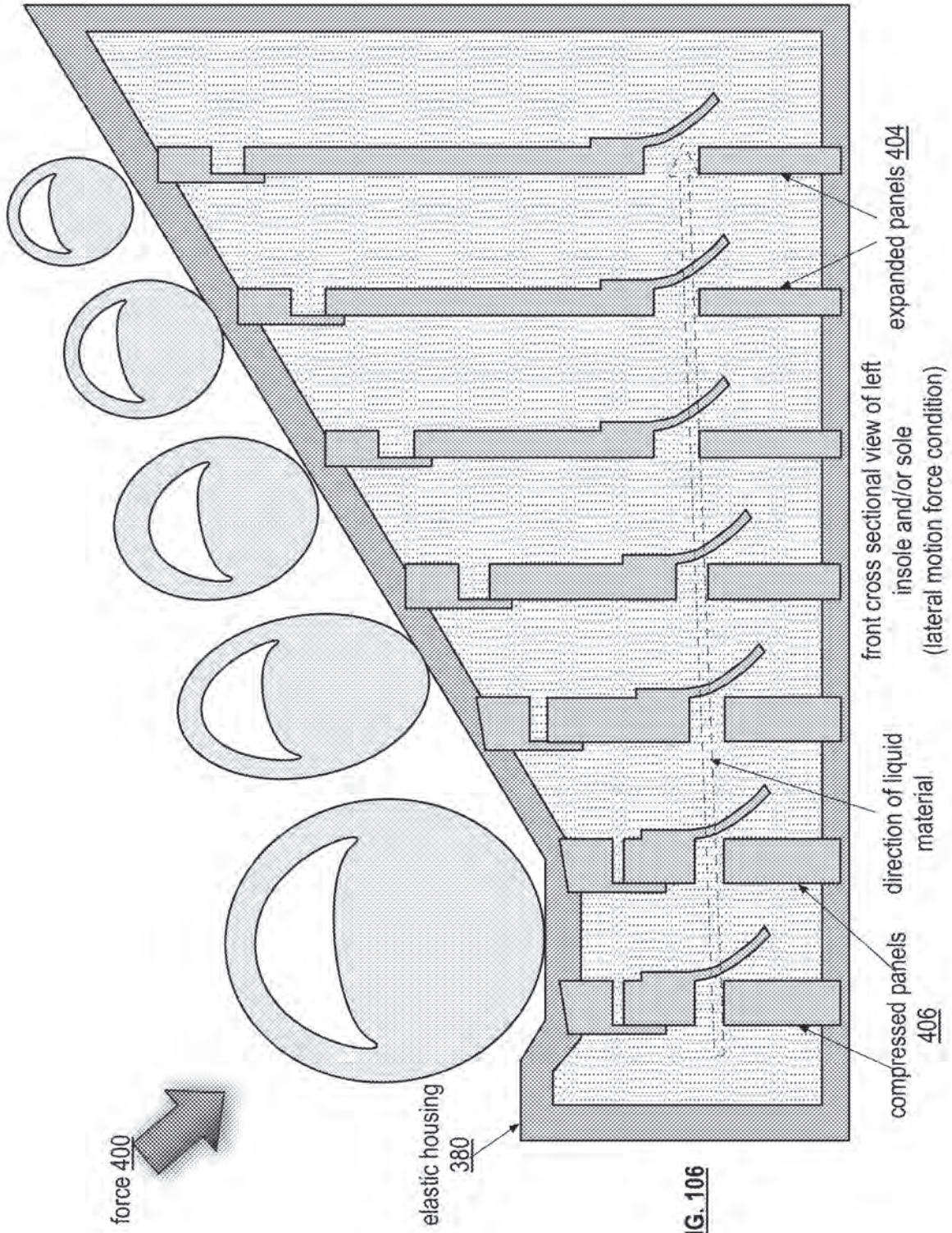
force 400
elastic housing 380
compressed panels 406
direction of liquid material
front cross sectional view of left insole and/or sole (lateral motion force condition)
expanded panels 404

FIG. 106

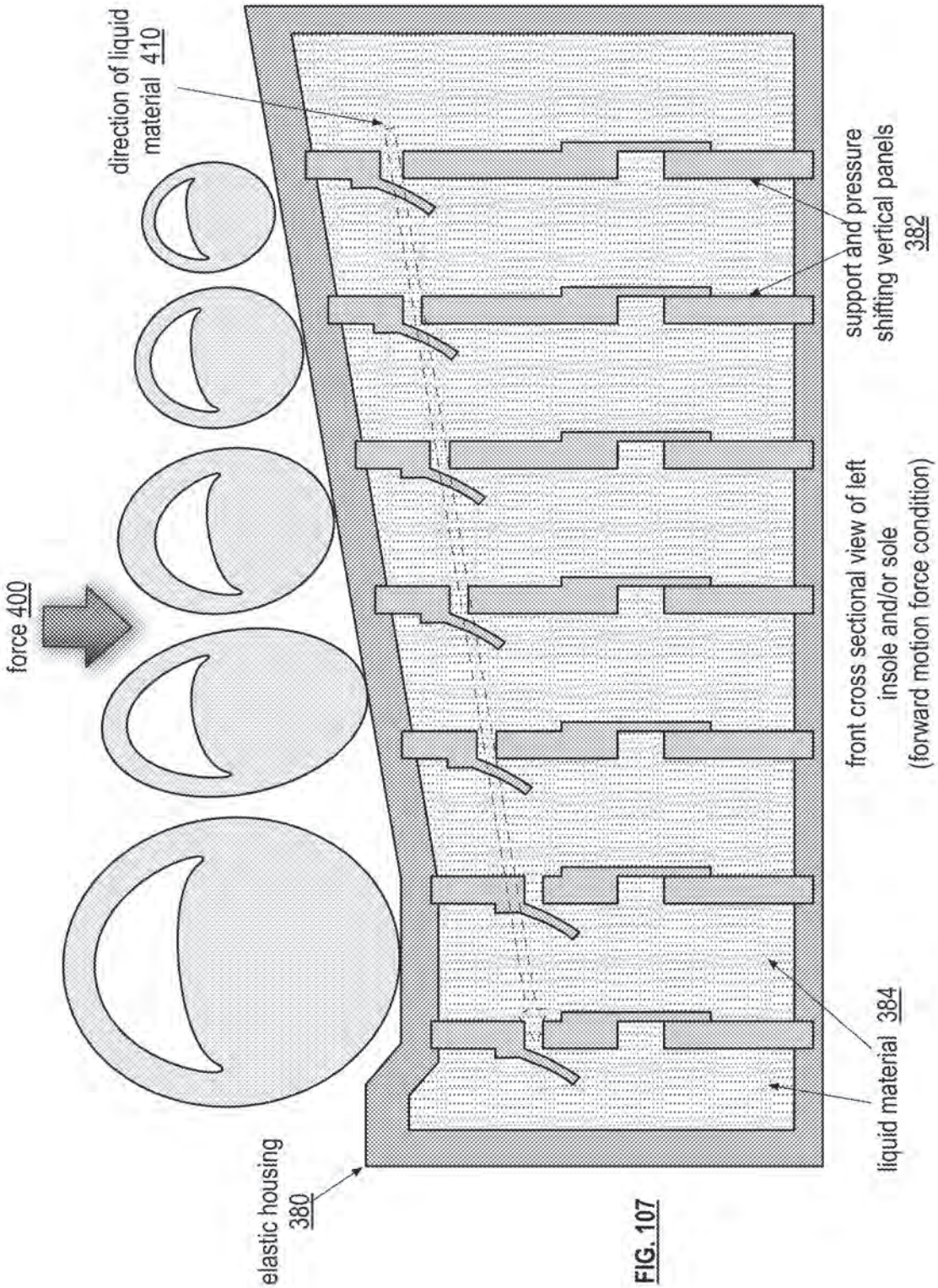
direction of liquid material 410
force 400
elastic housing 380
support and pressure shifting vertical panels 382
front cross sectional view of left insole and/or sole (forward motion force condition)
liquid material 384

FIG. 107

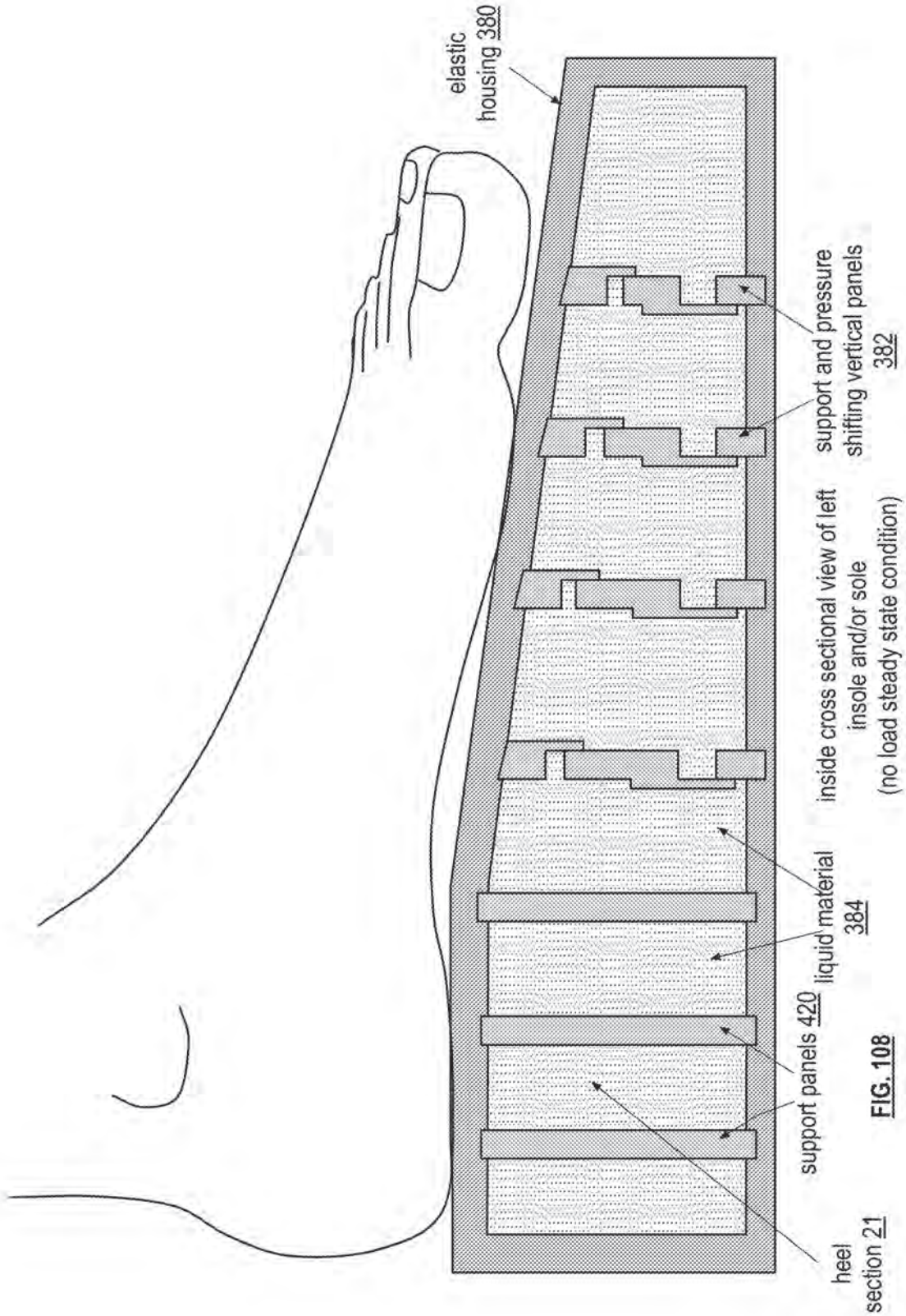
elastic housing 380
support and pressure shifting vertical panels 382
inside cross sectional view of left insole and/or sole (no load steady state condition)
liquid material 384
support panels 420
heel section 21

FIG. 108

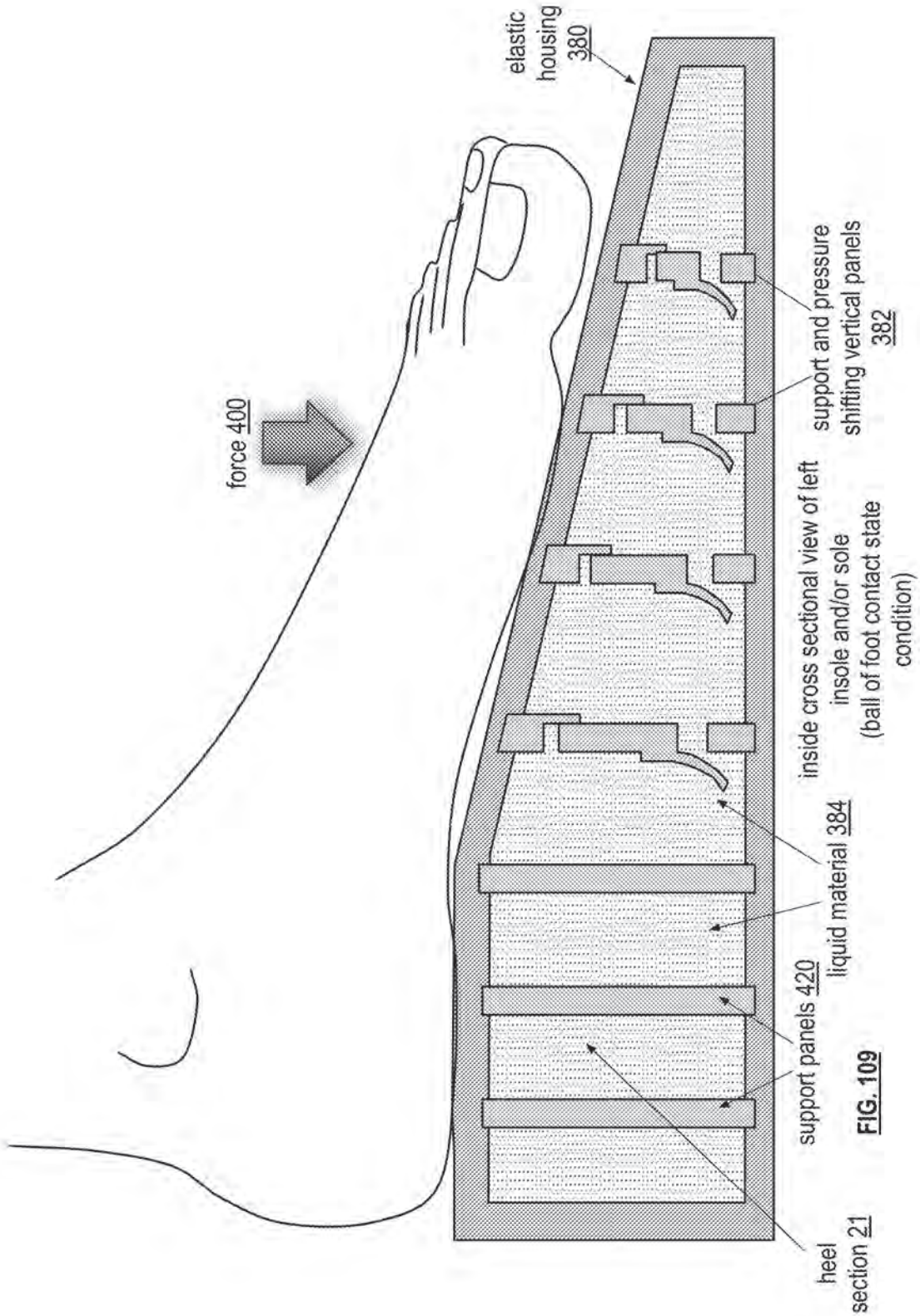
force 400
elastic housing 380
support and pressure shifting vertical panels 382
inside cross sectional view of left insole and/or sole (ball of foot contact state condition)
liquid material 384
support panels 420
heel section 21

FIG. 109

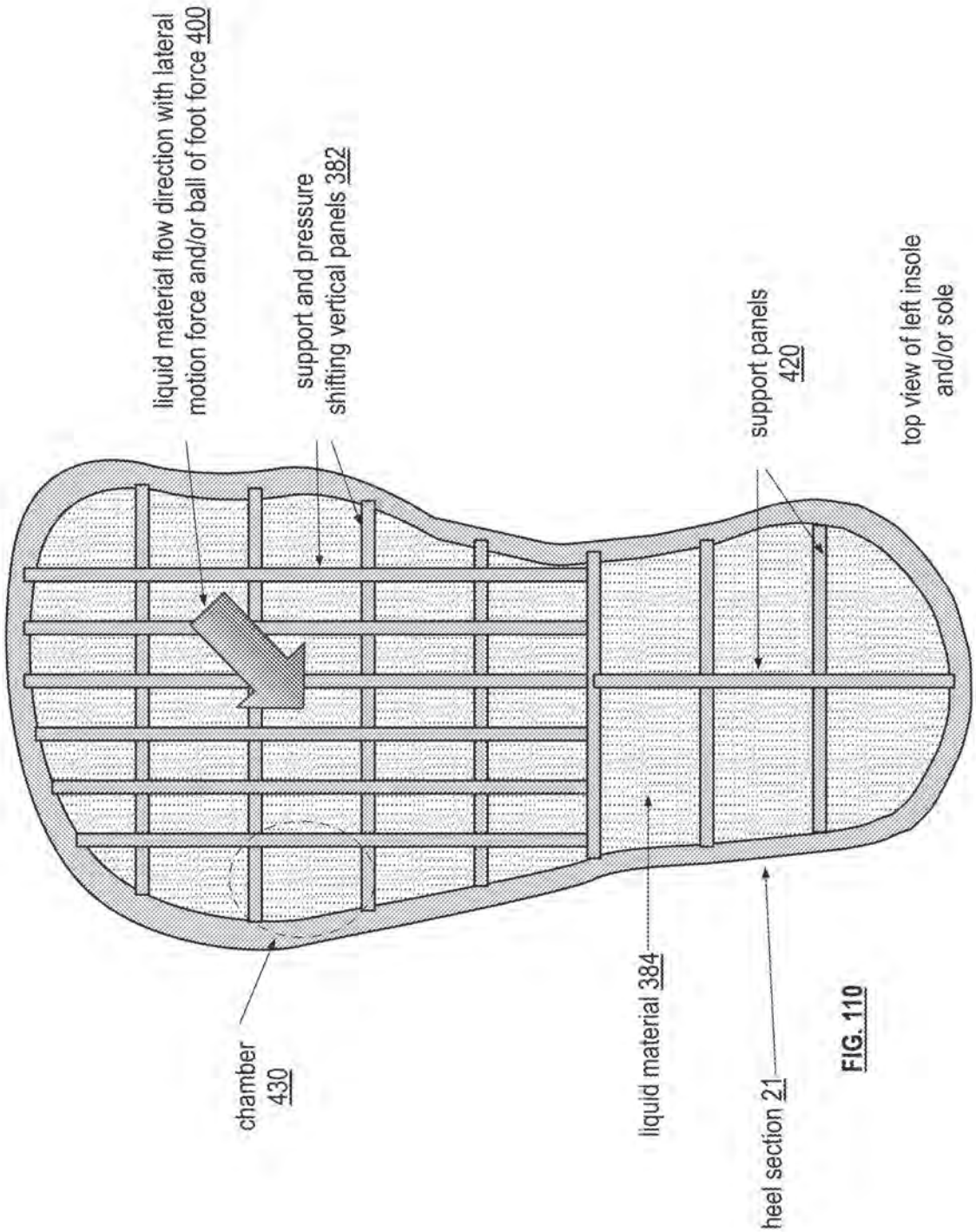
liquid material flow direction with lateral motion force and/or ball of foot force 400
support and pressure shifting vertical panels 382
support panels 420
top view of left insole and/or sole
chamber 430
liquid material 384
heel section 21

FIG. 110

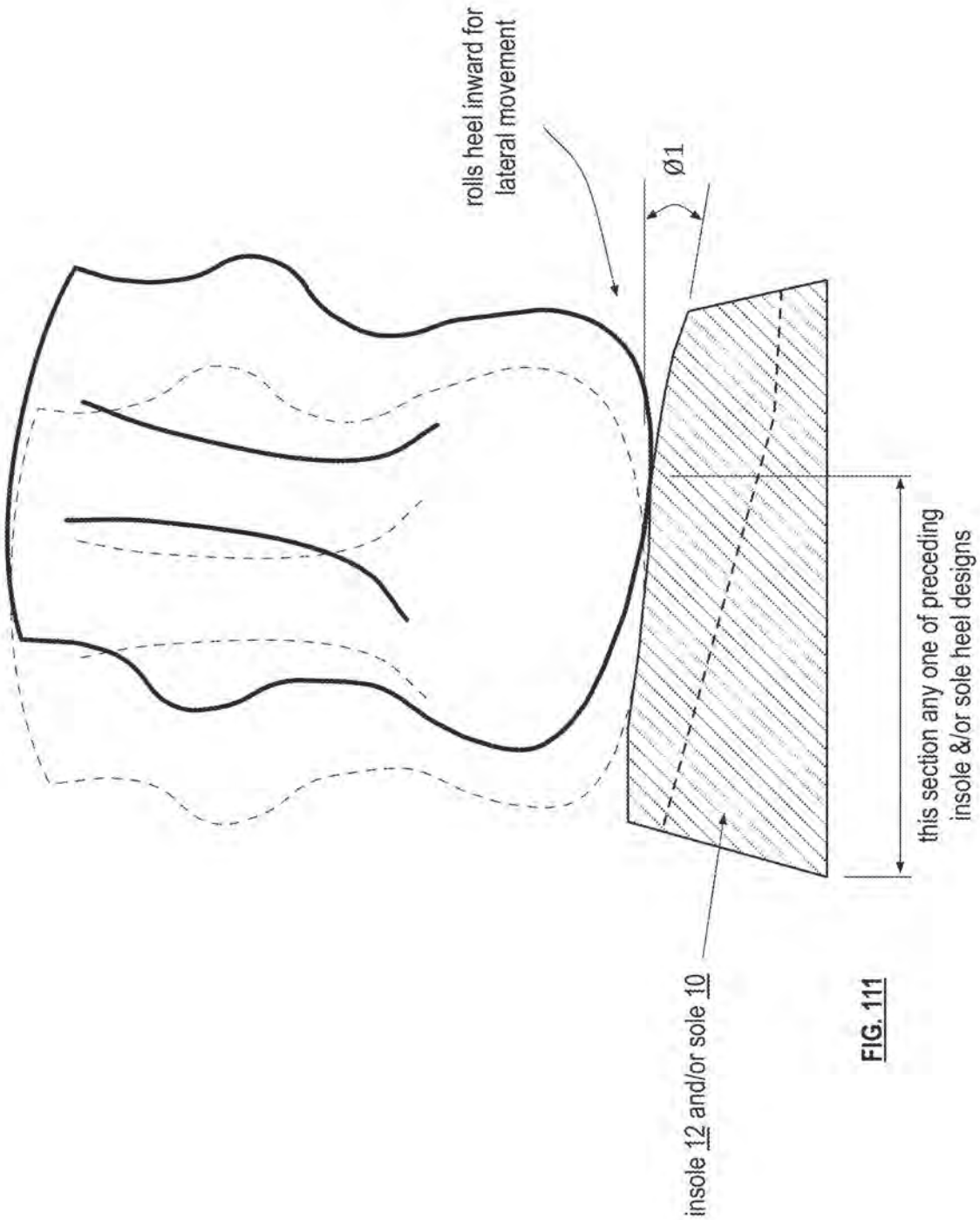
rolls heel inward for lateral movement
Ø1
insole 12 and/or sole 10
this section any one of preceding insole &/or sole heel designs

FIG. 111

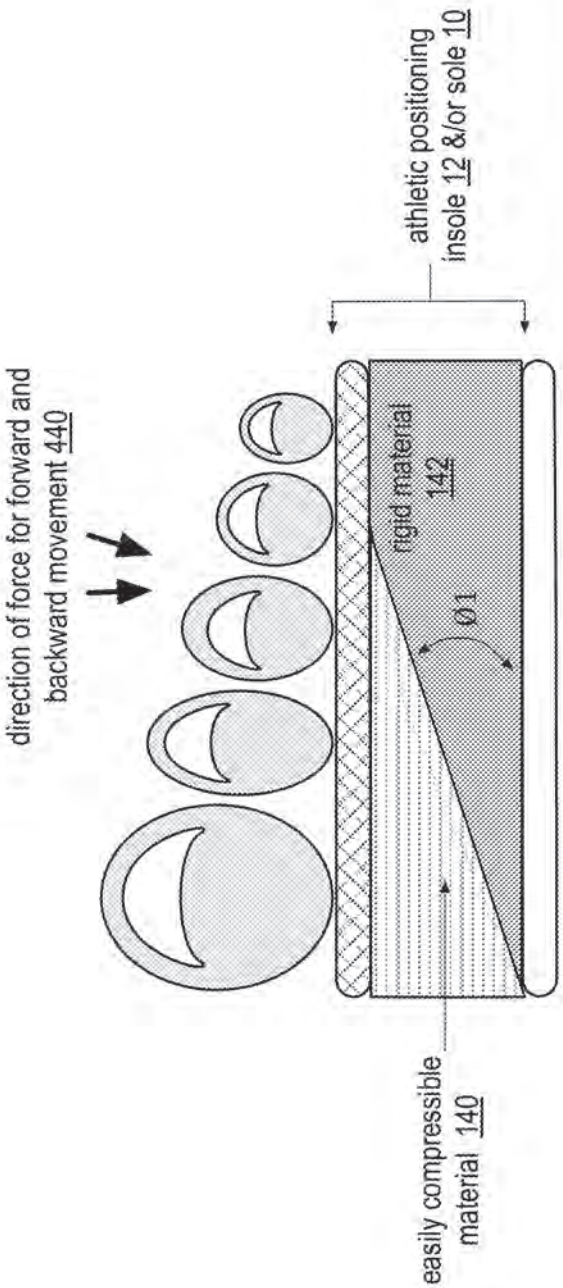

FIG. 112
left foot - front view

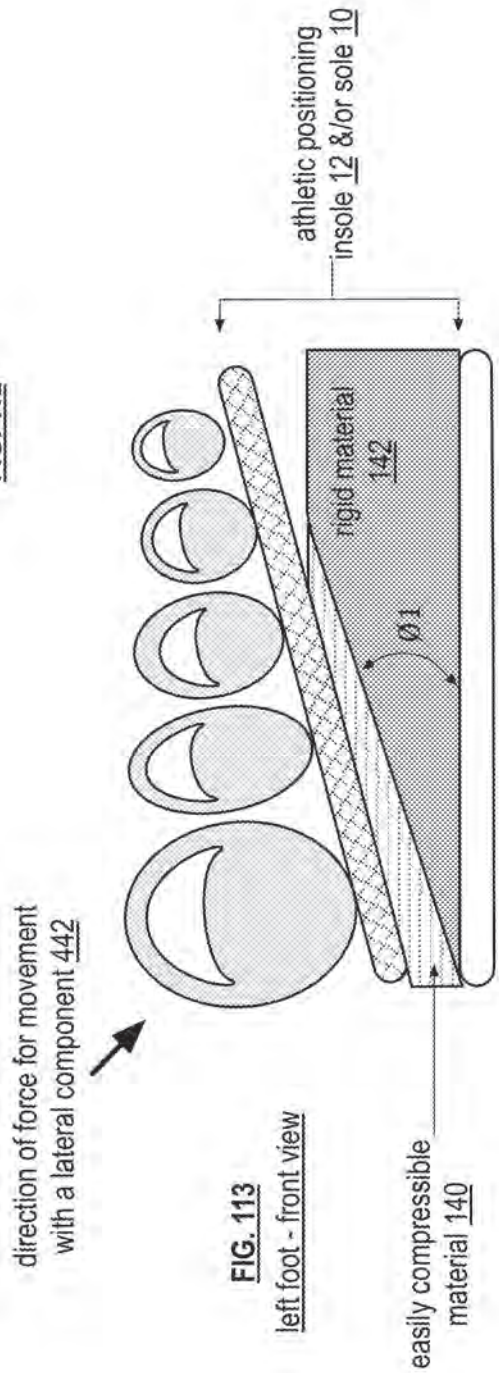

FIG. 113
left foot - front view

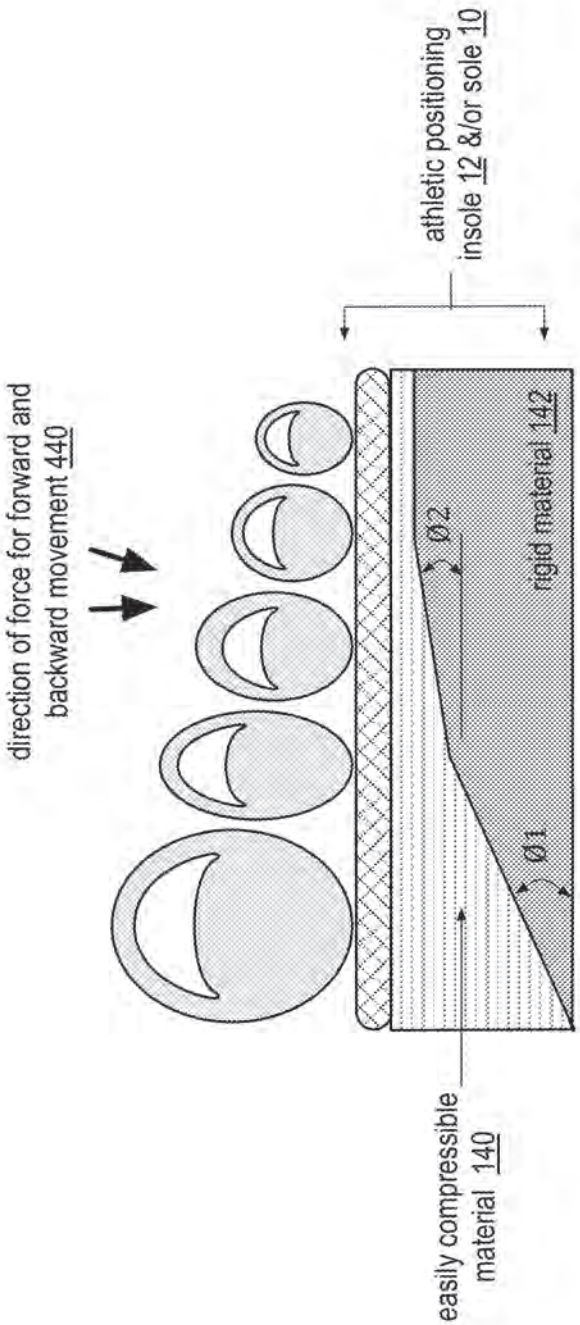

FIG. 114
left foot - front view

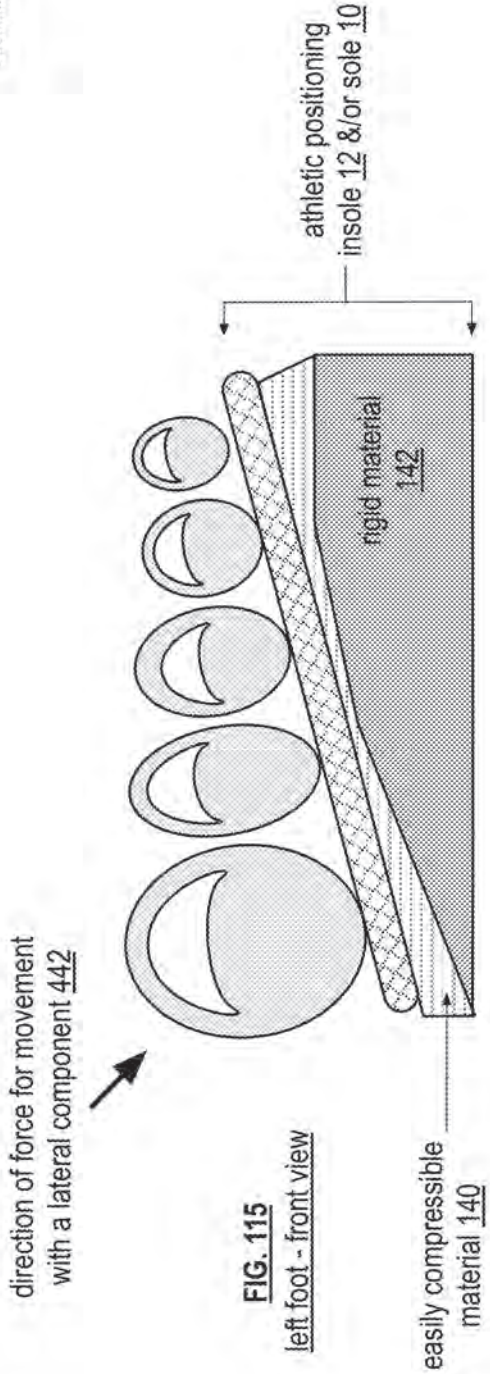

FIG. 115
left foot - front view

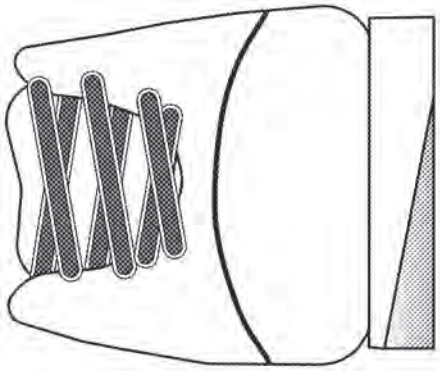

FIG. 117

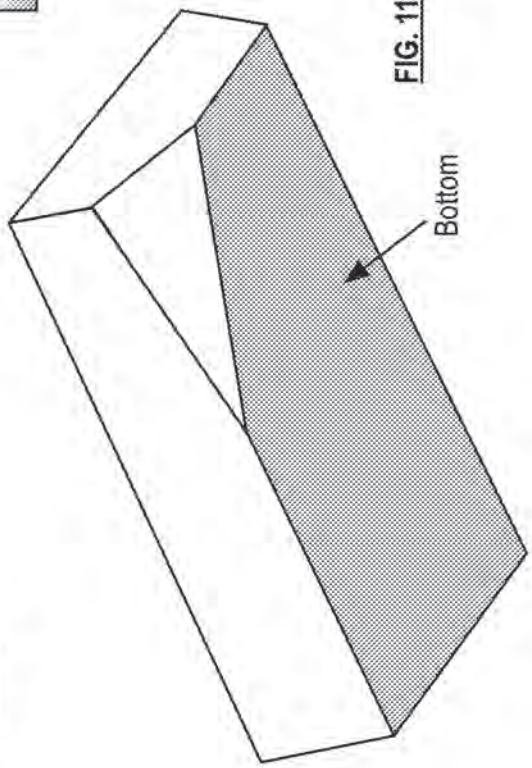

FIG. 118

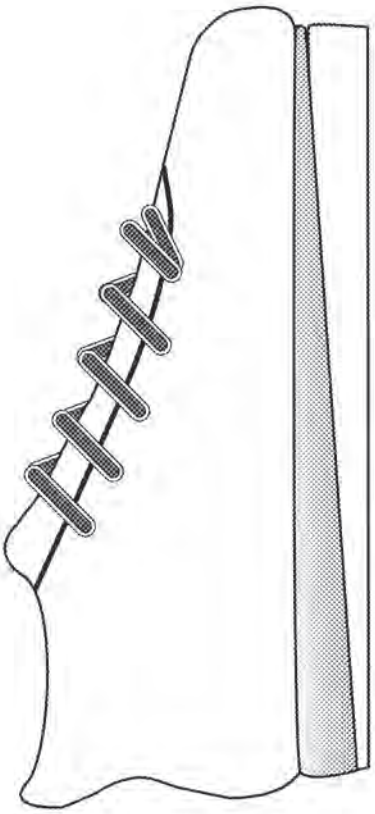

FIG. 116

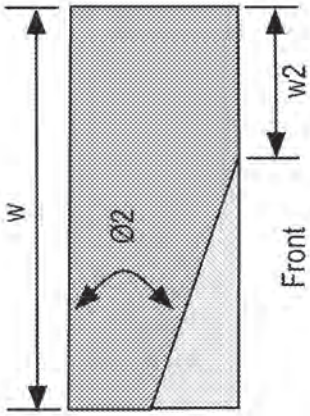

Front
FIG. 120

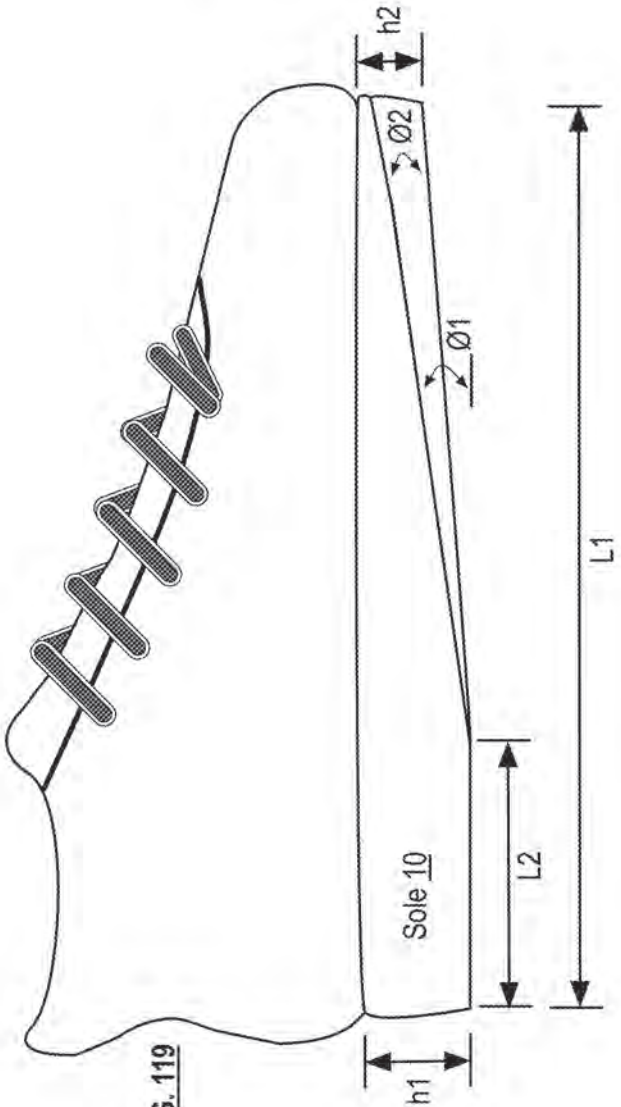

FIG. 119

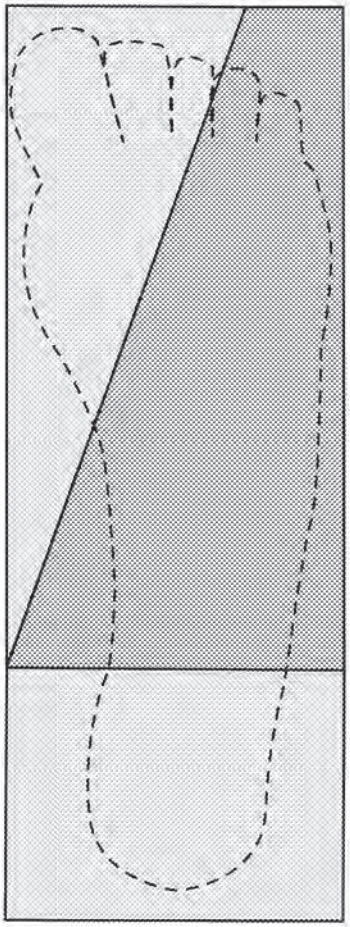

Bottom
FIG. 121

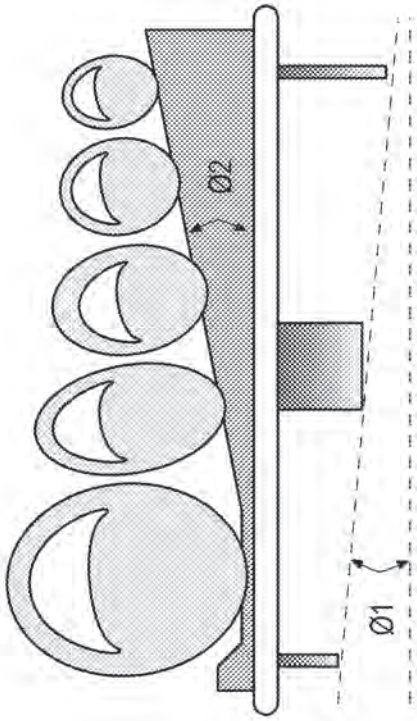

left foot - front view
FIG. 123

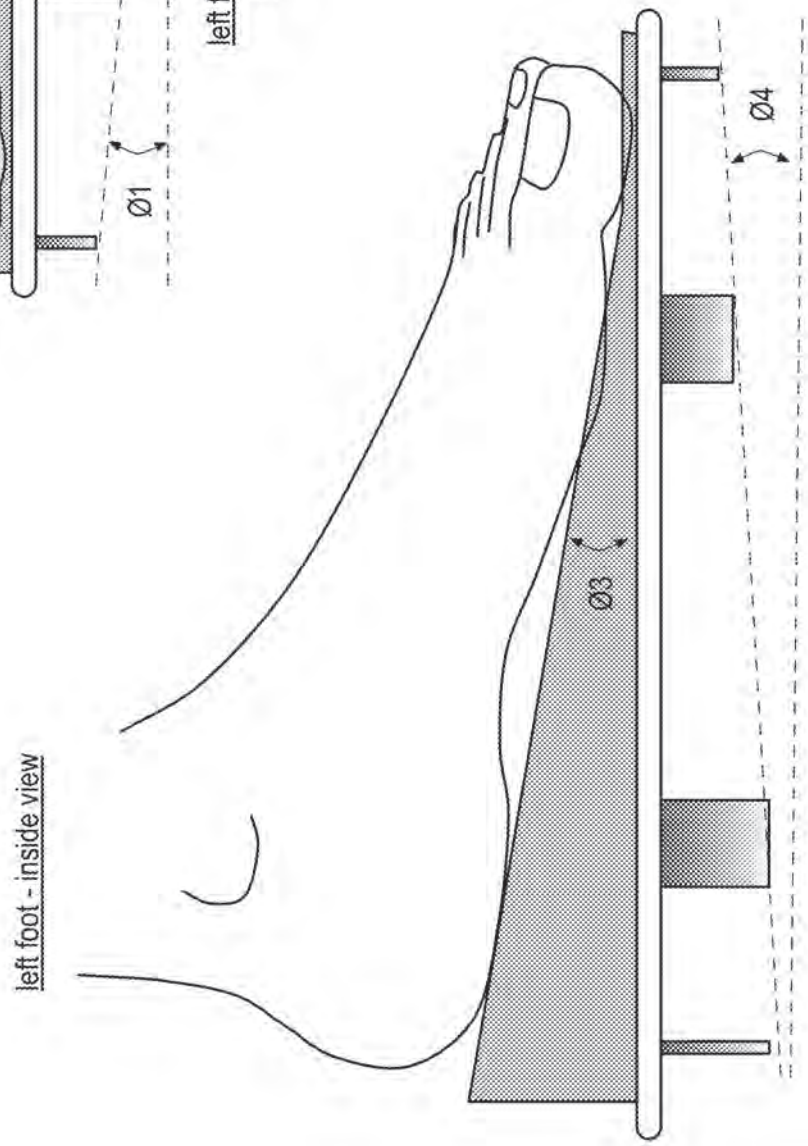

left foot - inside view
FIG. 122

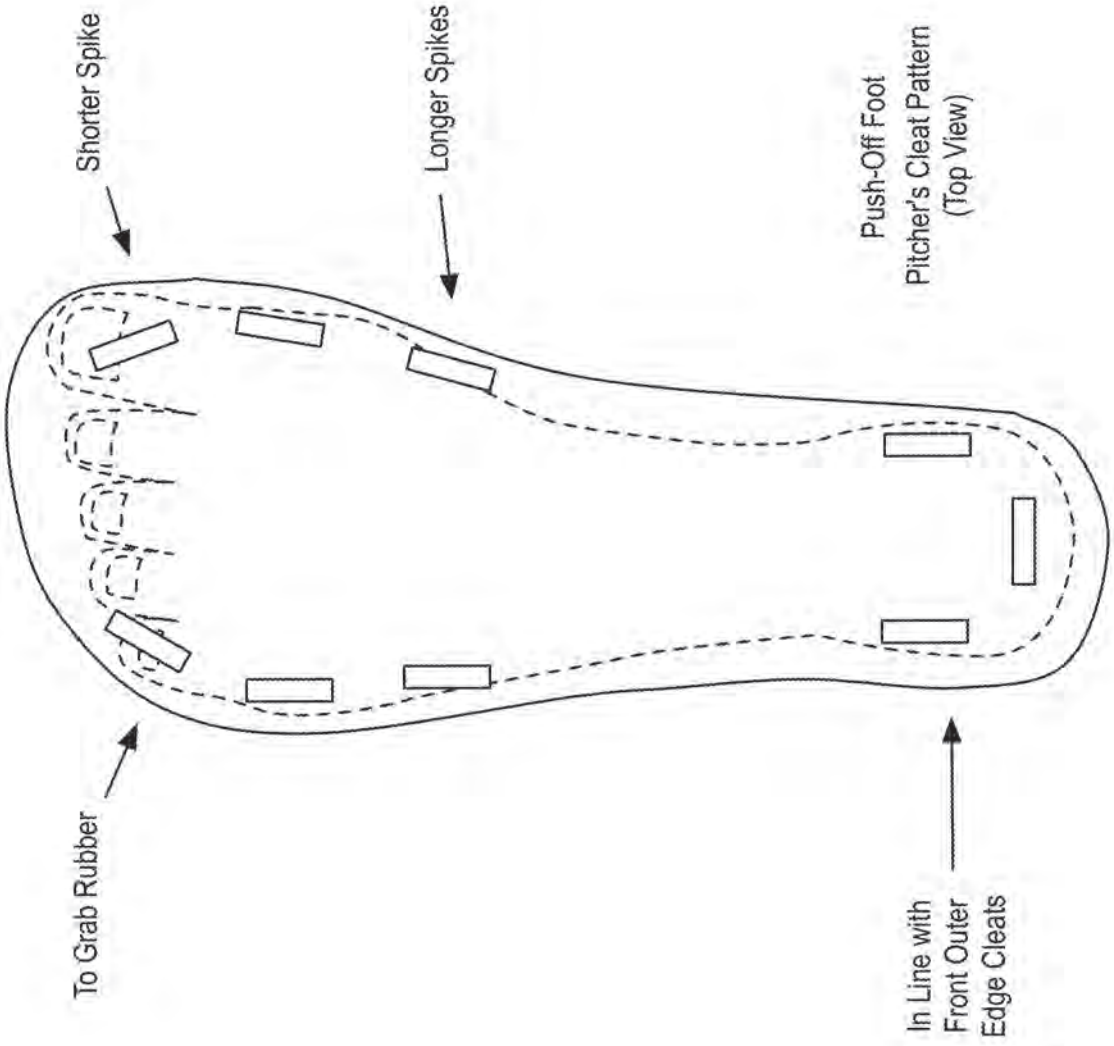
Shorter Spike
Longer Spikes
Push-Off Foot
Pitcher's Cleat Pattern
(Top View)
To Grab Rubber
In Line with
Front Outer
Edge Cleats

FIG. 124

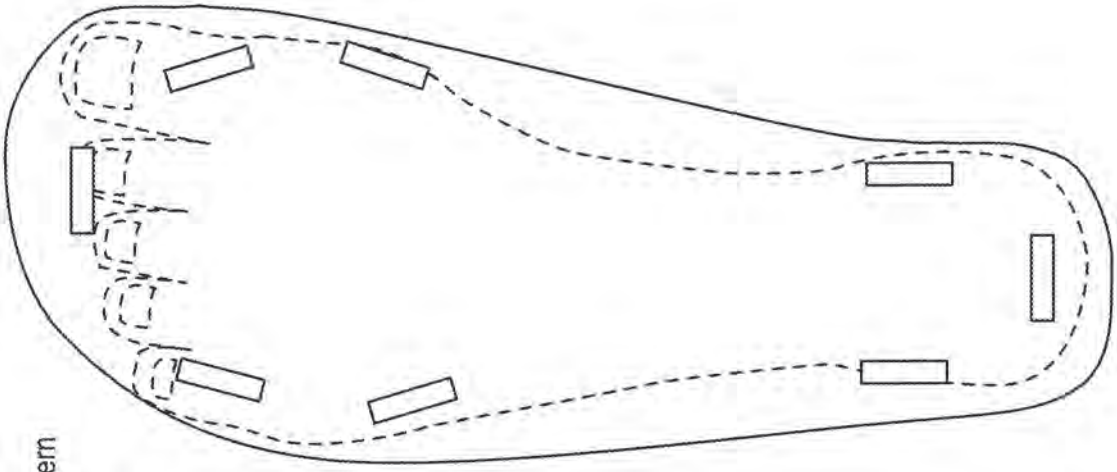

Pitcher's Cleat Pattern
Plant Foot
(top view)

FIG. 125

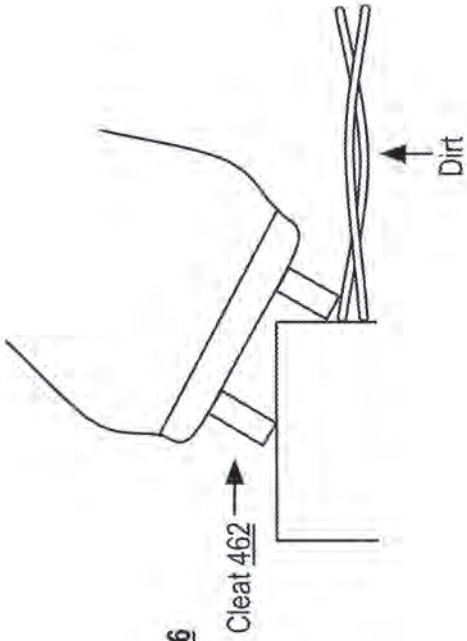

FIG. 126

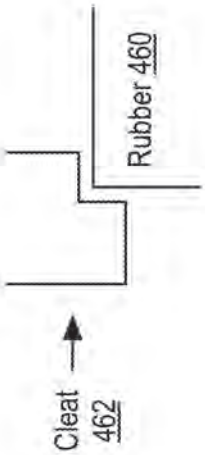

FIG. 128

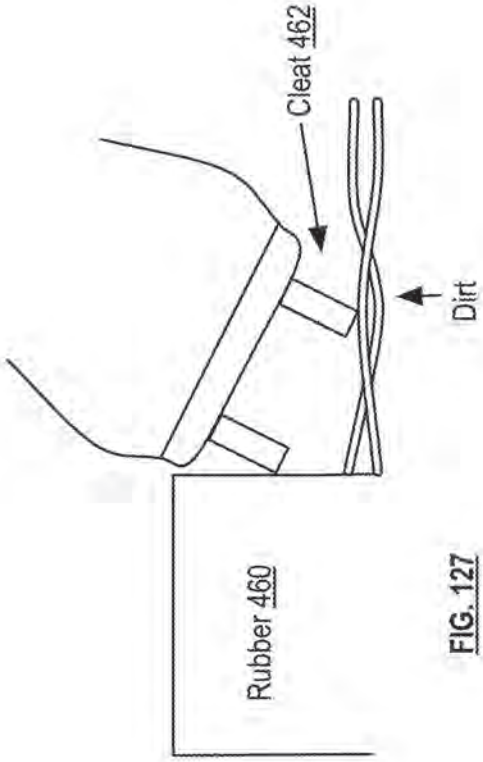

FIG. 127

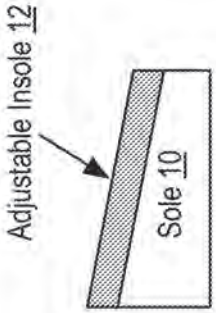

FIG. 129

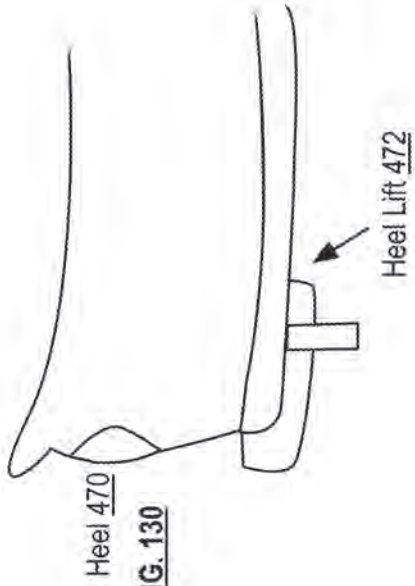

FIG. 130

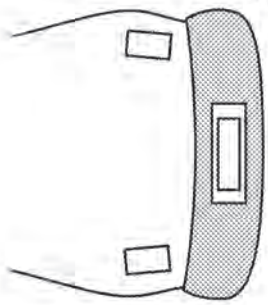

FIG. 131

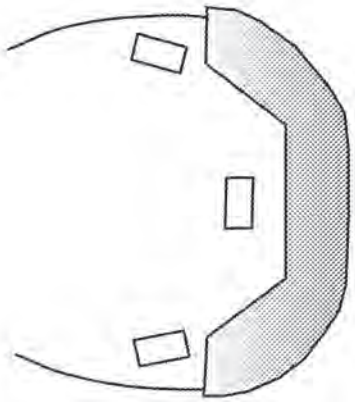

FIG. 132

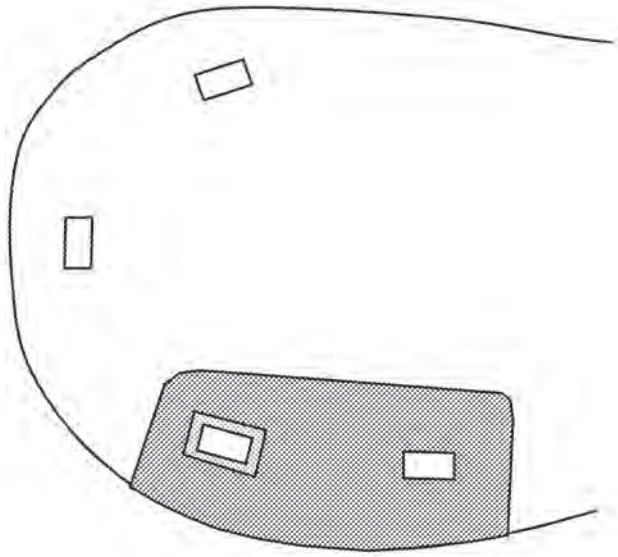

FIG. 133

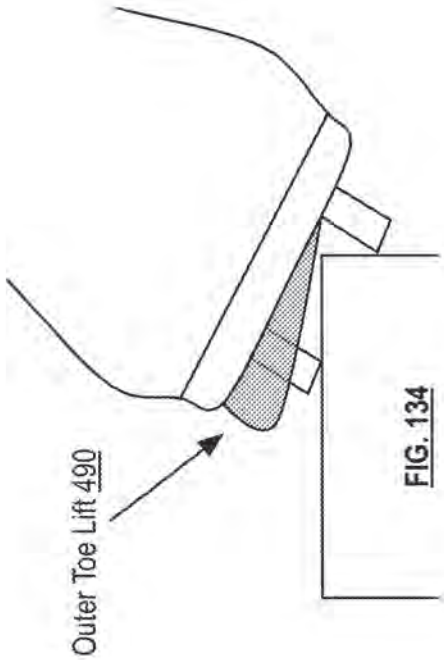

FIG. 134

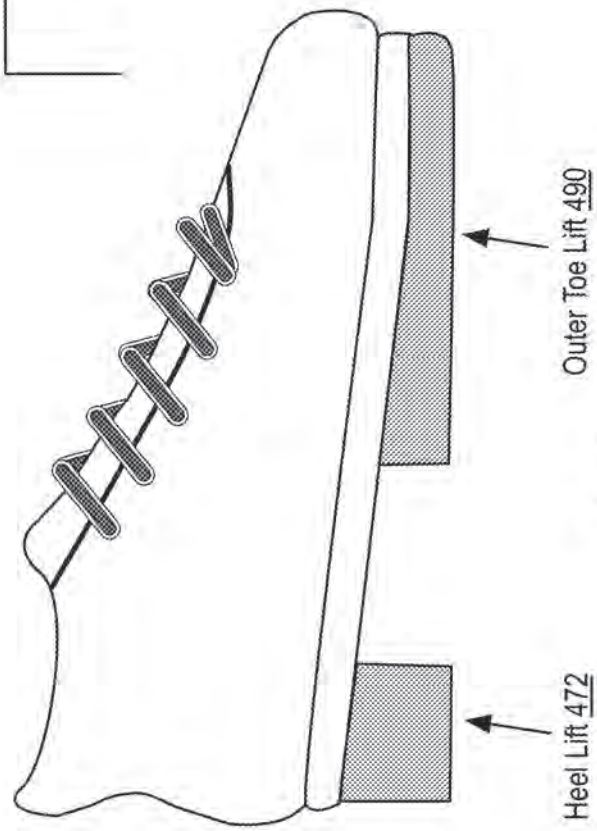

FIG. 135

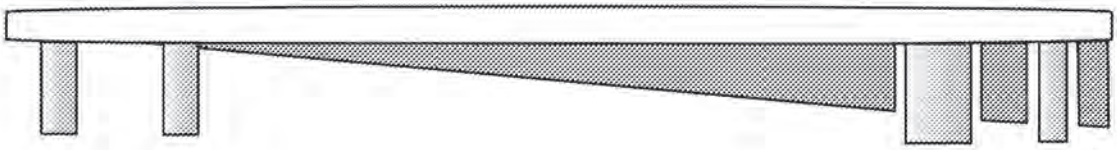

FIG. 138

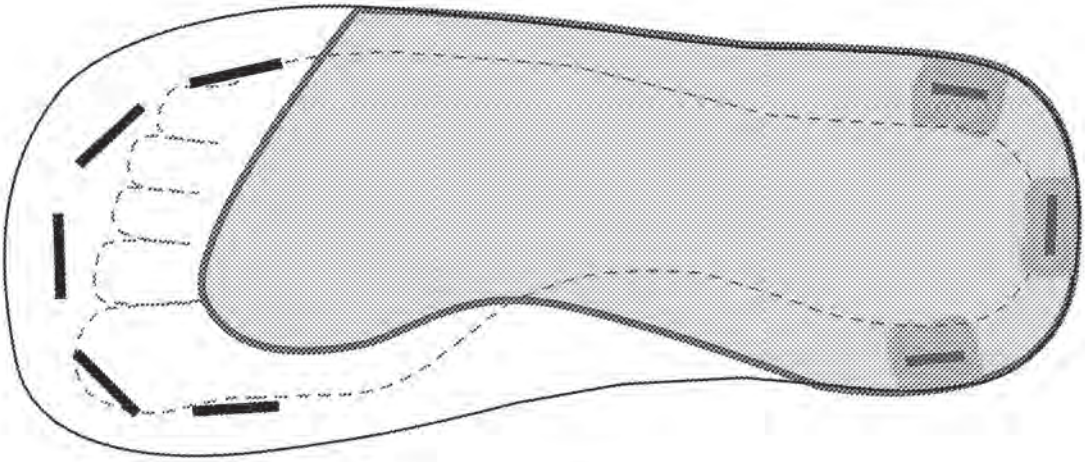

FIG. 136
Bottom of Left Drive Shoe

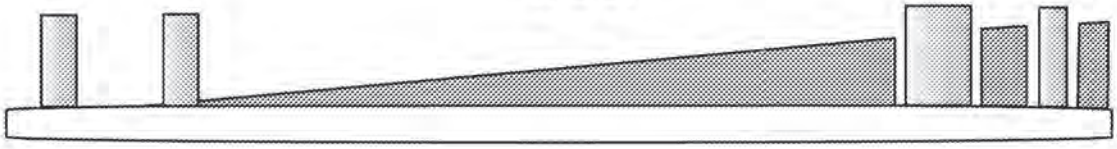

FIG. 137

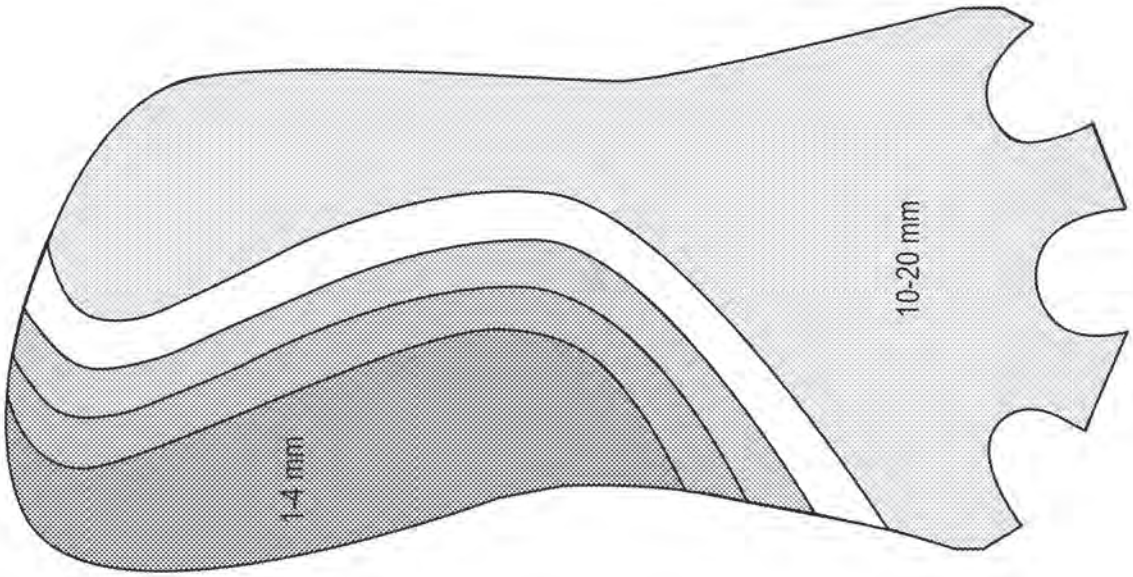

Topography of Sole Attachment

FIG. 139

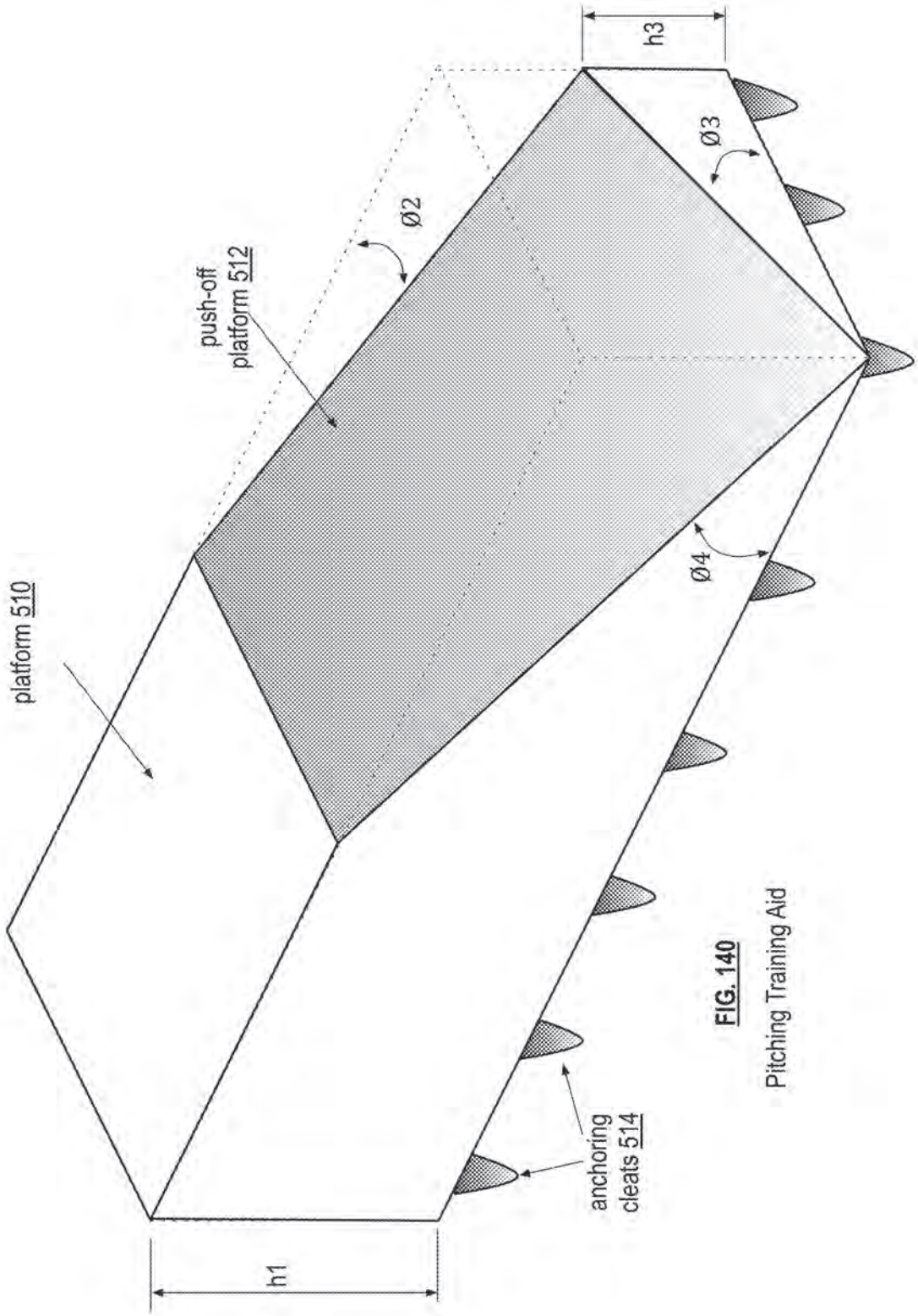

FIG. 140
Pitching Training Aid

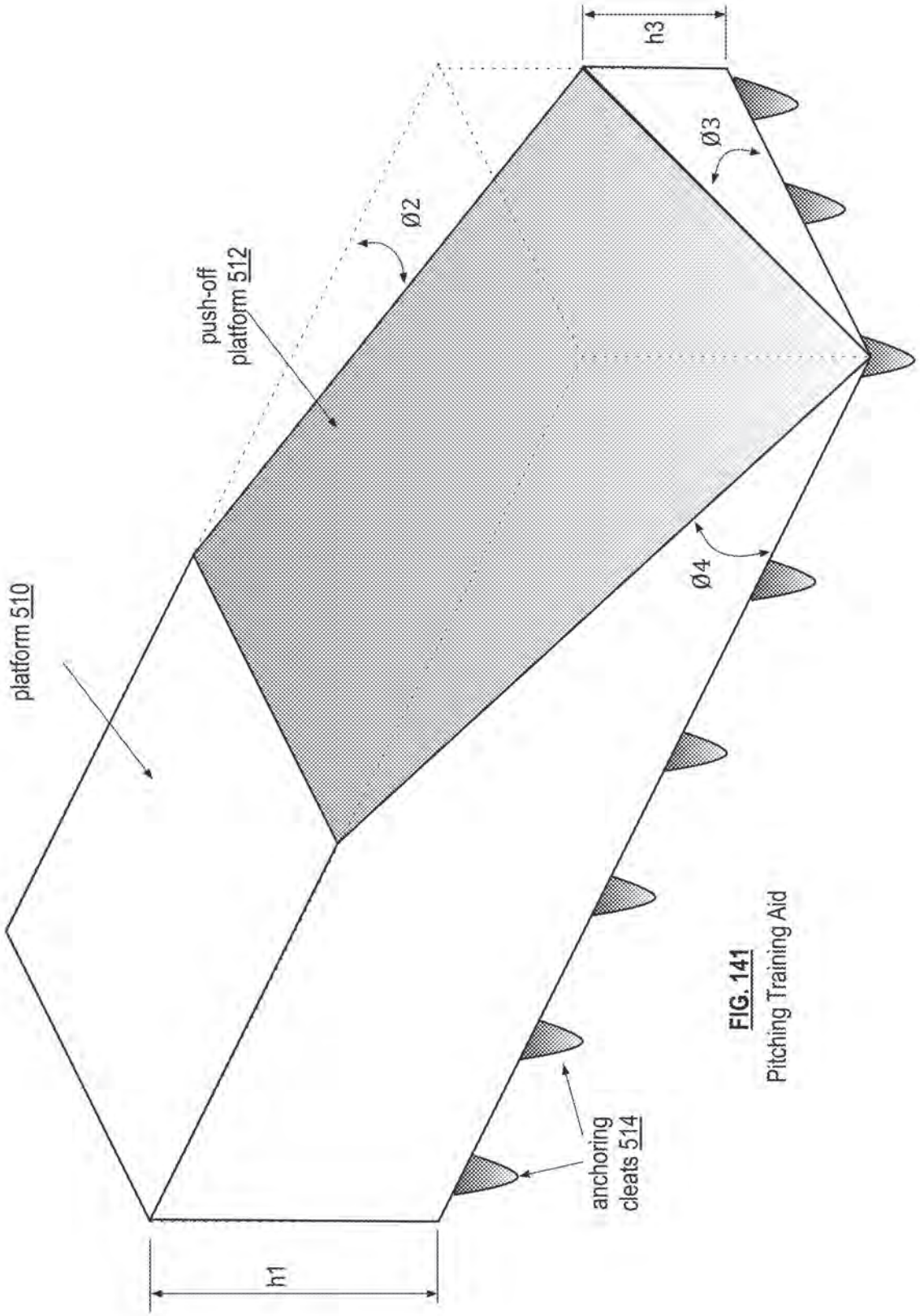

FIG. 141
Pitching Training Aid

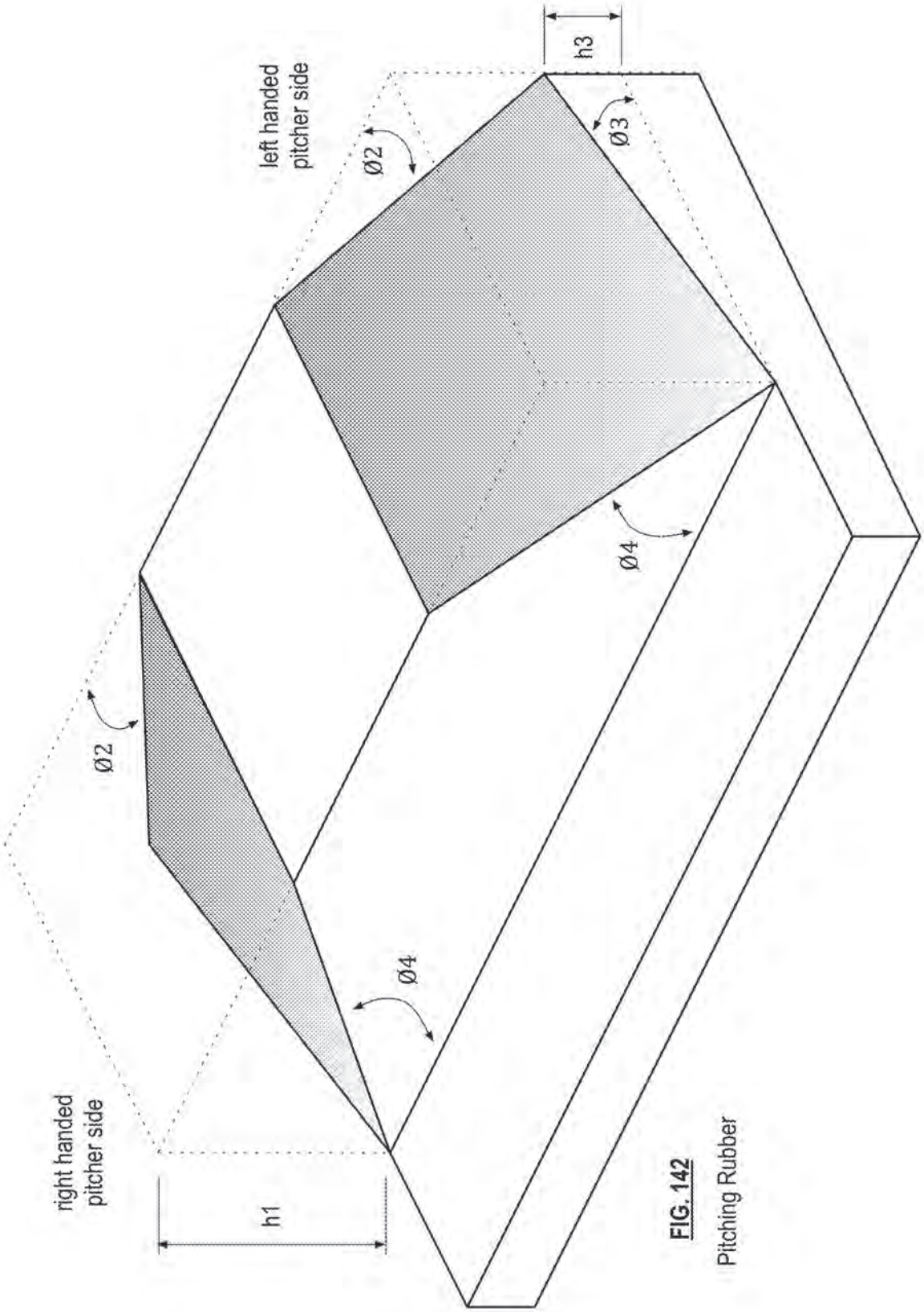

FIG. 142
Pitching Rubber

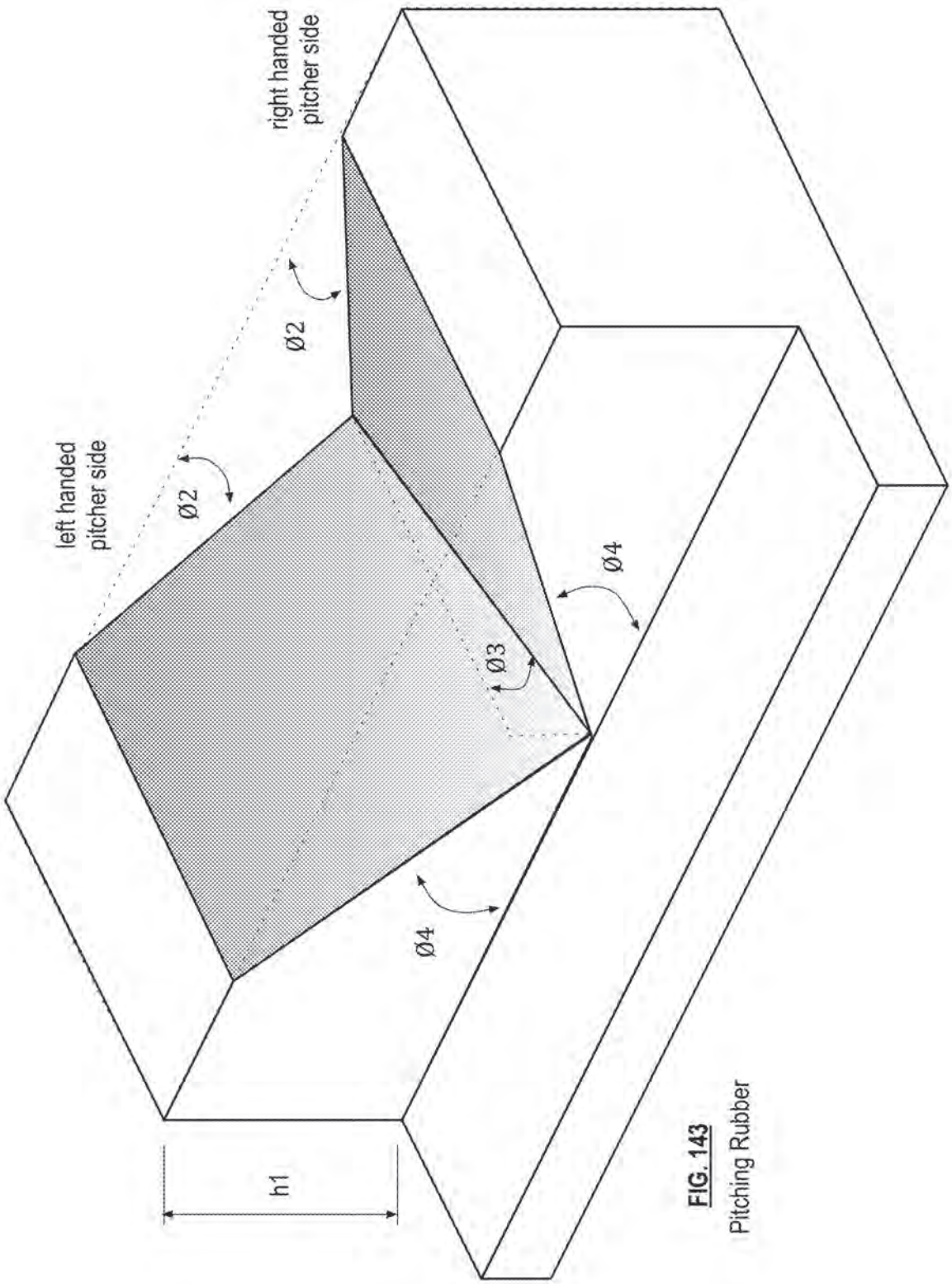

FIG. 143
Pitching Rubber

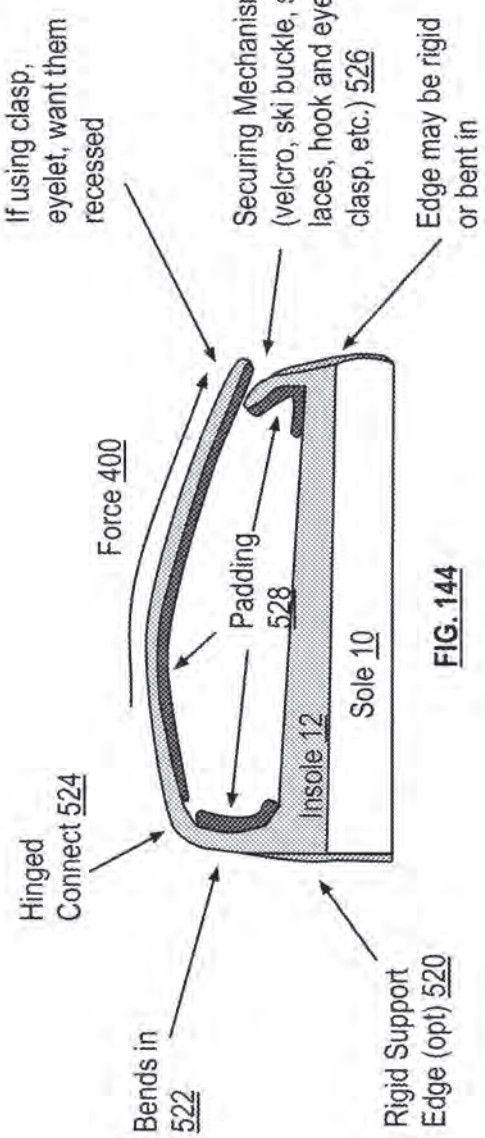

FIG. 144

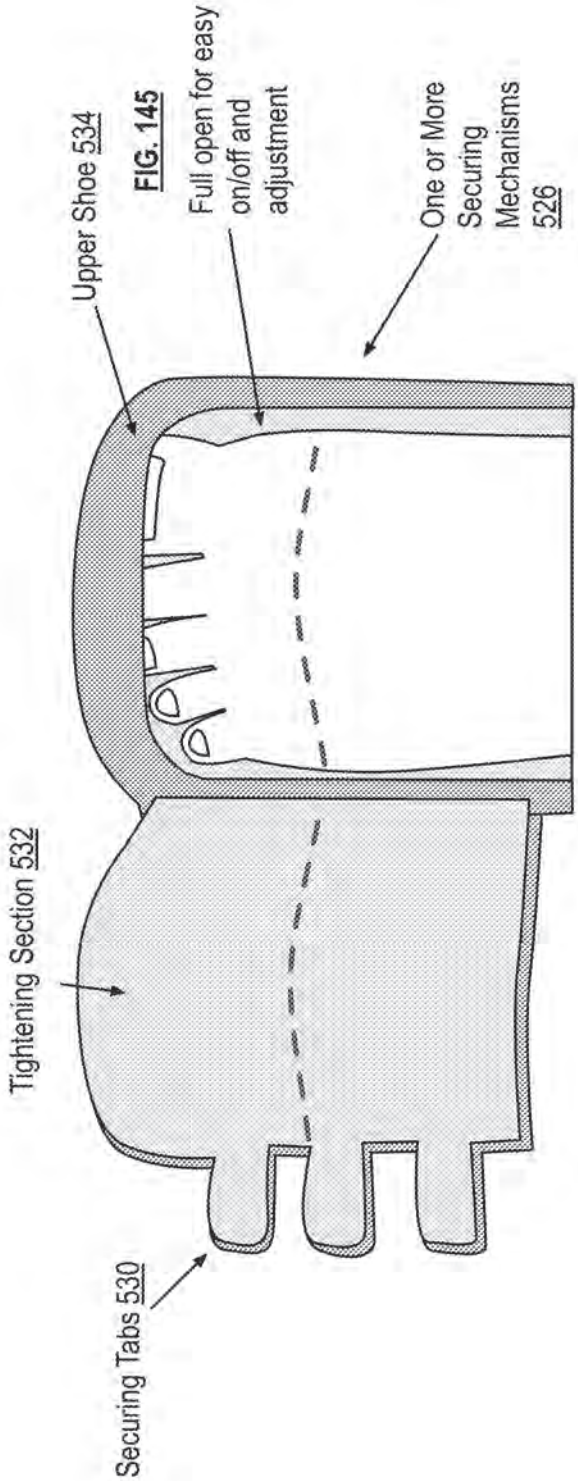

FIG. 145

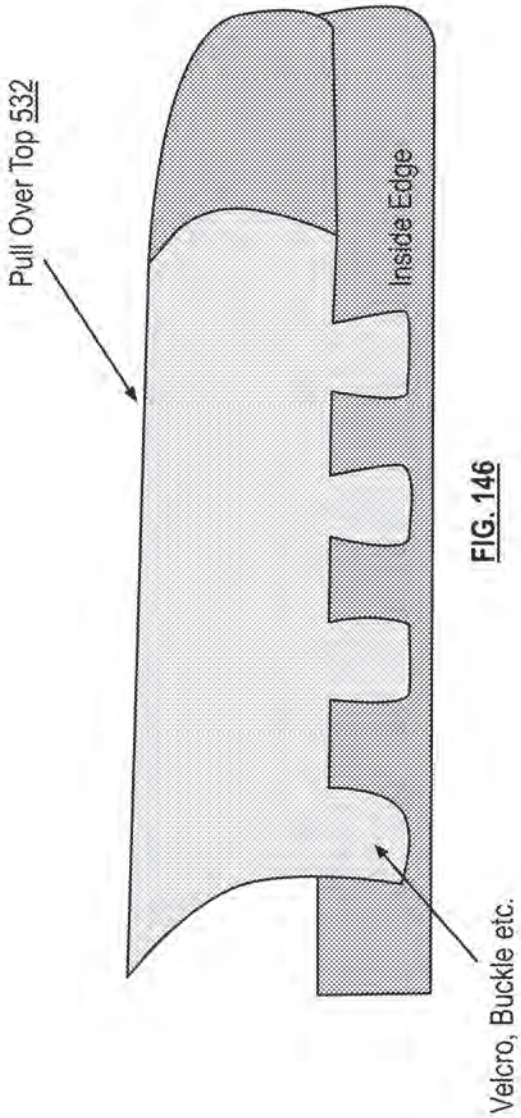

FIG. 146

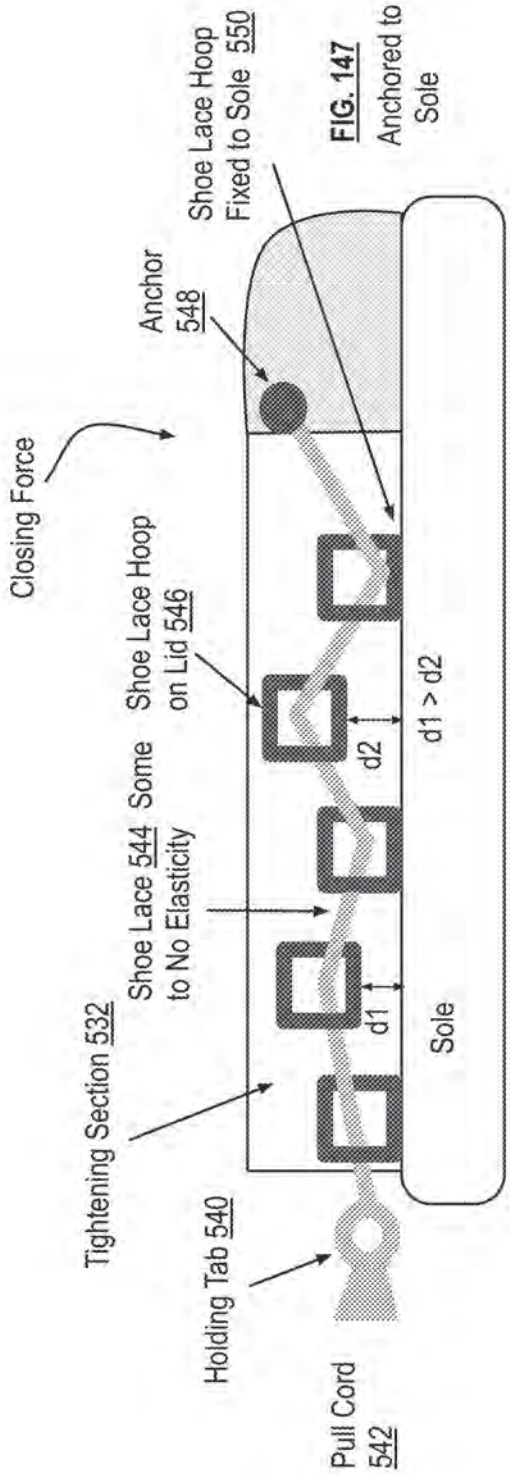

FIG. 147

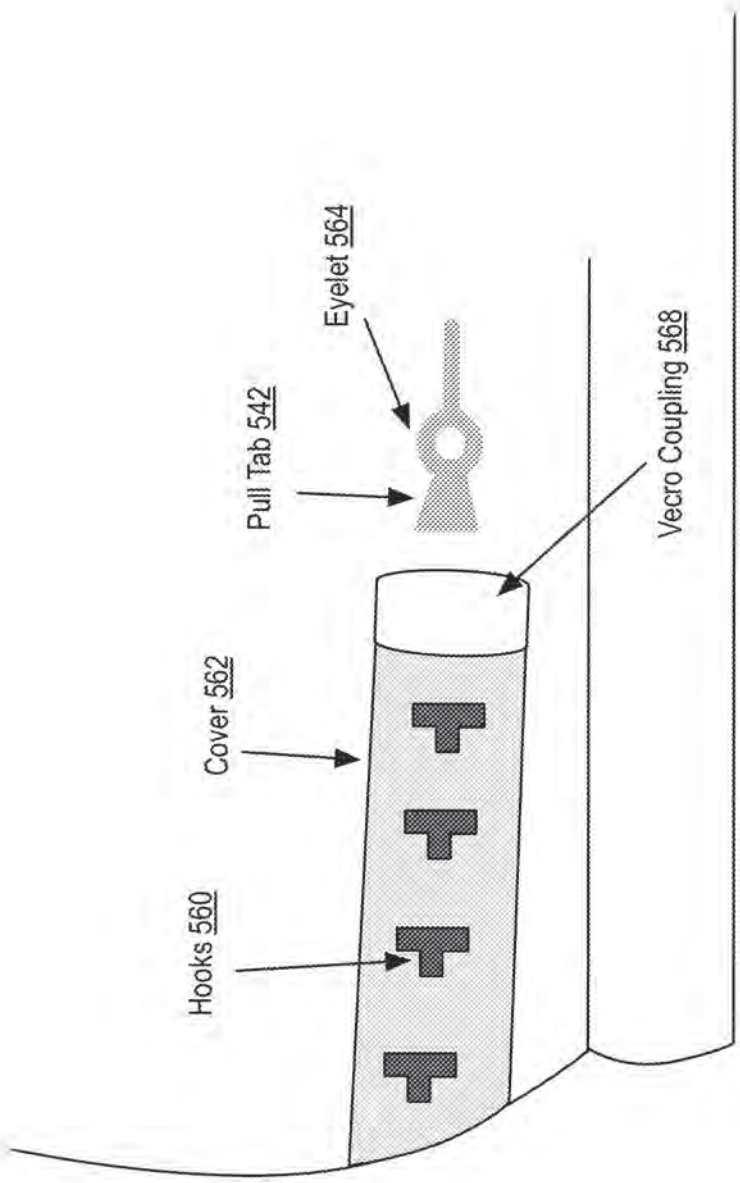
Eyelet 564
Pull Tab 542
Cover 562
Hooks 560
Vecro Coupling 568

FIG. 148

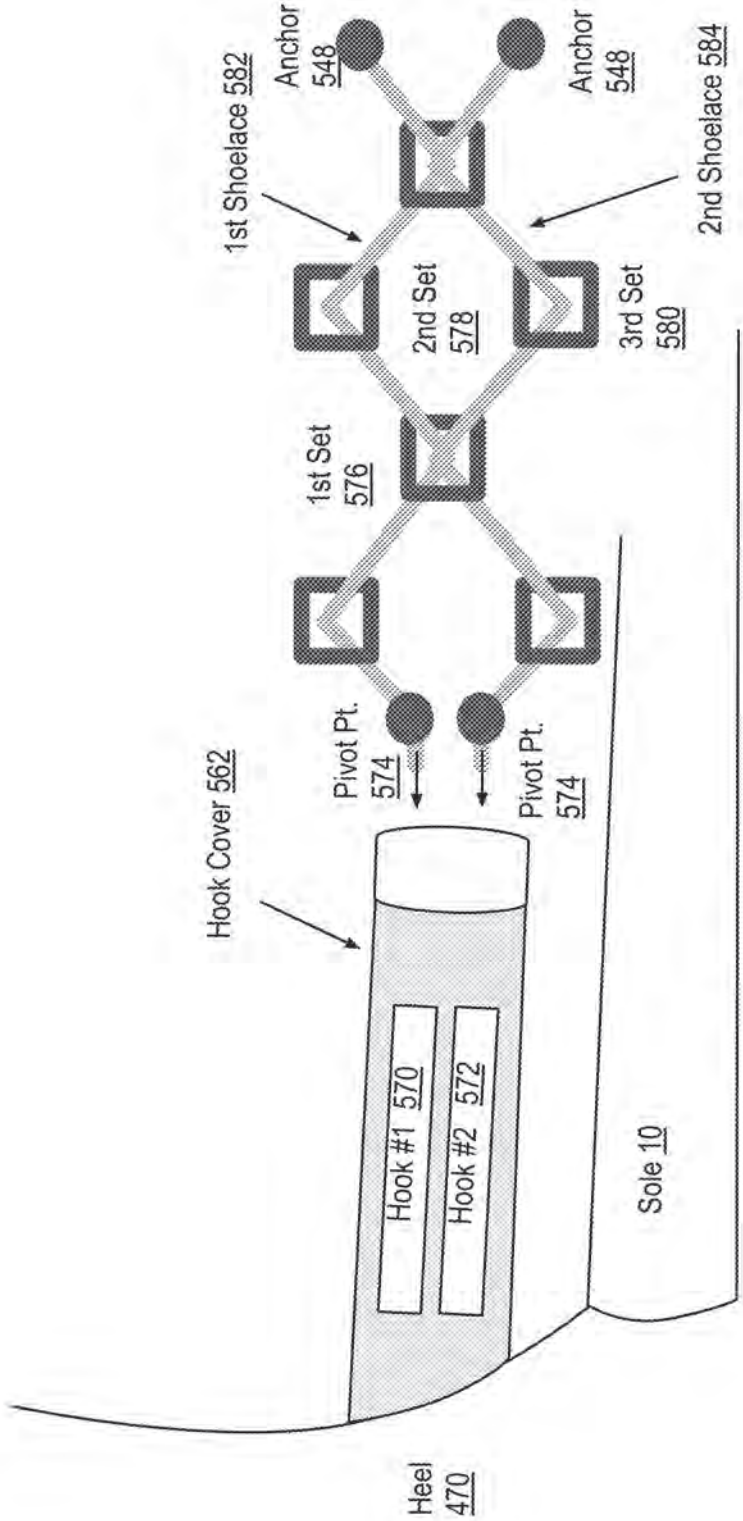
Anchor 548
Anchor 548
1st Shoelace 582
2nd Shoelace 584
2nd Set 578
3rd Set 580
1st Set 576
Pivot Pt. 574
Pivot Pt. 574
Hook Cover 562
Hook #1 570
Hook #2 572
Sole 10
Heel 470

FIG. 149

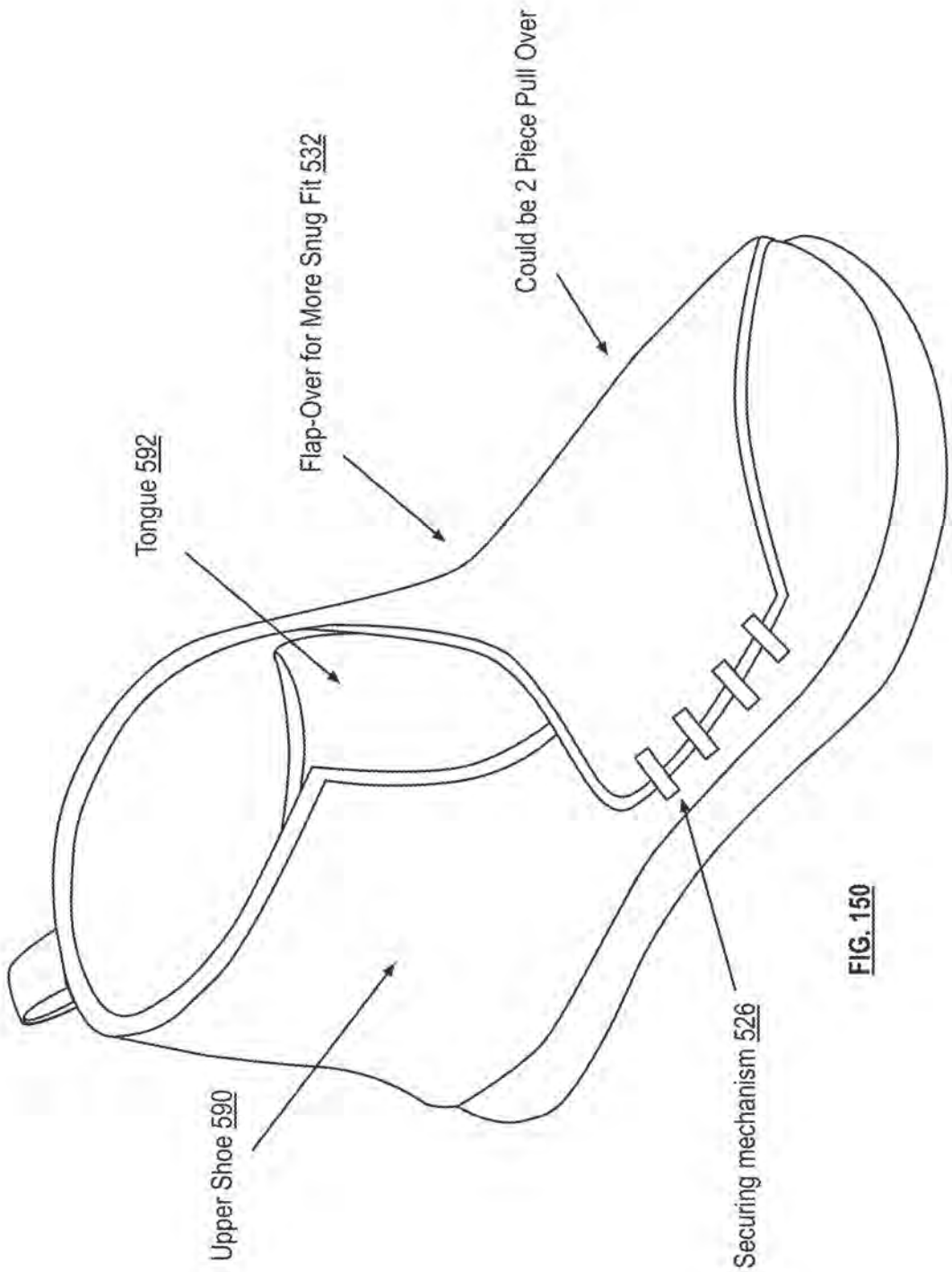
Tongue 592
Flap-Over for More Snug Fit 532
Could be 2 Piece Pull Over
Upper Shoe 590
Securing mechanism 526

FIG. 150

ADJUSTABLE ATHLETIC POSITIONING APPARATUS AND APPLICATIONS THEREOF

CROSS REFERENCE TO RELATED PATENTS

The present U.S. Utility Patent Application claims priority pursuant to 35 U.S.C. § 120 as a continuation of U.S. Utility application Ser. No. 14/159,860 entitled "ADJUSTABLE ATHLETIC POSITIONING APPARATUS AND APPLICATIONS THEREOF," filed Jan. 21, 2014, issuing as U.S. Pat. No. 10,092,061 on Oct. 9, 2018, which is a continuation of Ser. No. 13/867,406 entitled "ADJUSTABLE ATHLETIC POSITIONING APPARATUS AND APPLICATIONS THEREOF", filed Apr. 22, 2013, issued as U.S. Pat. No. 8,631,592 on Jan. 21, 2014, which is a continuation of U.S. Utility application Ser. No. 13/355,778, entitled "ATHLETIC POSITIONING APPARATUS AND APPLICATIONS THEREOF," filed Jan. 23, 2012, issued as U.S. Pat. No. 8,938,893 on Jan. 27, 2015, which claims priority pursuant to 35 U.S.C. § 119(e) to U.S. Provisional Application No. 61/450,485, entitled "ATHLETIC POSITIONING FOOTWEAR," filed Mar. 8, 2011, all of which are hereby incorporated herein by reference in their entirety and made part of the present U.S. Utility Patent Application for all purposes.

STATEMENT REGARDING FEDERALLY SPONSORED RESEARCH OR DEVELOPMENT

Not Applicable

INCORPORATION-BY-REFERENCE OF MATERIAL SUBMITTED ON A COMPACT DISC

Not Applicable

BACKGROUND OF THE INVENTION

Technical Field of the Invention

This invention relates generally to footwear and more particularly to athletic positioning footwear.

Description of Related Art

As is known, a wide variety of shoes are available in today's market. The types, designs, and style of the shoes vary greatly depending on their use. For example, dress shoes have a particular design and style based on a more formal use. As another example, athletic shoes have a particular design and style based on their use while playing sports. For instance, each of tennis shoes, golf shoes, running shoes, cross training shoes, hiking shoes, basketball shoes, etcetera have a particular sole pattern, a sole design, an insole design, and upper shoe portion design. In addition, each type of athletic shoe may further include a lateral stability design, an arch support design, a pronation compensation design, and/or a supination compensation design.

As another specific example, FIGS. **1** and **2** illustrate a cross sectional front view and a cross-sectional side view of a pair of baseball spikes. As is shown, the baseball spikes include a sole, a padded insole, an upper shoe portion, and cleats (or spikes). The positioning of the cleats facilitates better traction in grass and/or dirt while playing baseball. In these figures, the sole and/or the padded insole provide a relatively flat platform for the foot within the baseball

spikes. In some designs of baseball spikes, the heel portion of the shoe may be higher than the toe portion of the shoe from a side perspective.

BRIEF DESCRIPTION OF THE SEVERAL VIEWS OF THE DRAWING(S)

FIG. **1** illustrates a cross-sectional front view diagram of baseball spikes of the prior art;

FIG. **2** illustrates a cross-sectional side view diagram of baseball spikes of the prior art;

FIG. **3** illustrates a cross-sectional side view diagram of an embodiment of a shoe having an athletic positioning insole and/or sole in accordance with the present invention;

FIG. **4** illustrates a cross-sectional front view diagram of an embodiment of a shoe having an athletic positioning insole and/or sole in accordance with the present invention;

FIG. **5** illustrates an isometric diagram of an embodiment of an athletic positioning shape in accordance with the present invention;

FIG. **6** illustrates a cross-sectional side view diagram of an embodiment of an athletic positioning shape in accordance with the present invention;

FIG. **7** illustrates a cross-sectional front view diagram of an embodiment of an athletic positioning shape in accordance with the present invention;

FIG. **8** illustrates an isometric diagram of another embodiment of an athletic positioning shape in accordance with the present invention;

FIG. **9** illustrates a cross-sectional side view diagram of another embodiment of an athletic positioning shape in accordance with the present invention;

FIG. **10** illustrates a cross-sectional front view diagram of another embodiment of an athletic positioning shape in accordance with the present invention;

FIG. **11** illustrates an isometric diagram of another embodiment of an athletic positioning shape in accordance with the present invention;

FIG. **12** illustrates an isometric diagram of another embodiment of an athletic positioning shape in accordance with the present invention;

FIG. **13** illustrates an isometric diagram of another embodiment of an athletic positioning shape in accordance with the present invention;

FIG. **14** illustrates an isometric diagram of another embodiment of an athletic positioning shape in accordance with the present invention;

FIG. **15** illustrates an isometric diagram of another embodiment of an athletic positioning shape in accordance with the present invention;

FIG. **16** illustrates a top view diagram of an embodiment of an athletic positioning insole and/or sole having one or more cups in accordance with the present invention;

FIG. **17** illustrates a cross-sectional front view diagram of an embodiment of an athletic positioning insole and/or sole having a toe cup in accordance with the present invention;

FIG. **18** illustrates a cross-sectional front view diagram of an embodiment of an athletic positioning insole and/or sole having a ball of foot cup in accordance with the present invention;

FIG. **19** illustrates a topographical diagram of another embodiment of an athletic positioning shape in accordance with the present invention;

FIG. **20** illustrates a topographical diagram of another embodiment of an athletic positioning shape in accordance with the present invention;

FIG. **21** illustrates a topographical diagram of another embodiment of an athletic positioning shape in accordance with the present invention;

FIG. **22** illustrates a topographical diagram of another embodiment of an athletic positioning shape in accordance with the present invention;

FIG. **23** illustrates a topographical diagram of another embodiment of an athletic positioning shape in accordance with the present invention;

FIGS. **24-33** illustrate layers of another embodiment of an athletic positioning shape in accordance with the present invention;

FIG. **34** illustrates a cross-sectional side view diagram of another embodiment of an athletic positioning sole and/or insole in accordance with the present invention;

FIG. **35** illustrates a cross-sectional front view diagram of another embodiment of an athletic positioning sole and/or insole in accordance with the present invention;

FIG. **36** illustrates a cross-sectional side view diagram of another embodiment of an athletic positioning sole and/or insole in accordance with the present invention;

FIG. **37** illustrates a cross-sectional front view diagram of another embodiment of an athletic positioning sole and/or insole in accordance with the present invention;

FIG. **38** illustrates a cross-sectional side view diagram of another embodiment of an athletic positioning sole and/or insole in accordance with the present invention;

FIG. **39** illustrates a cross-sectional side view diagram of another embodiment of an athletic positioning sole and/or insole in accordance with the present invention;

FIG. **40** illustrates a cross-sectional side view diagram of another embodiment of an athletic positioning sole and/or insole in accordance with the present invention;

FIG. **41** illustrates a cross-sectional side view diagram of another embodiment of an athletic positioning sole and/or insole in accordance with the present invention;

FIG. **42** illustrates a cross-sectional side view diagram of another embodiment of an athletic positioning sole and/or insole in accordance with the present invention;

FIG. **43** illustrates a cross-sectional side view diagram of another embodiment of an athletic positioning sole and/or insole in accordance with the present invention;

FIG. **44** illustrates an isometric diagram of an embodiment of an athletic positioning sole in accordance with the present invention;

FIG. **45** illustrates an isometric diagram of another embodiment of an athletic positioning sole in accordance with the present invention;

FIG. **46** illustrates an isometric diagram of another embodiment of an athletic positioning sole in accordance with the present invention;

FIG. **47** illustrates an isometric diagram of another embodiment of an athletic positioning sole in accordance with the present invention;

FIG. **48** illustrates a cross-sectional side view diagram of an embodiment of an athletic positioning sole and an athletic positioning insole in accordance with the present invention;

FIG. **49** illustrates a top view diagram of an embodiment of an athletic positioning sole and an athletic positioning insole in accordance with the present invention;

FIG. **50** illustrates a bottom view diagram of an embodiment of an athletic positioning sole and an athletic positioning insole in accordance with the present invention;

FIG. **51** illustrates a cross-sectional front view diagram of an embodiment of an athletic positioning sole and an athletic positioning insole in accordance with the present invention;

FIG. **52** illustrates a cross-sectional side view diagram of another embodiment of an athletic positioning sole and an athletic positioning insole in accordance with the present invention;

FIG. **53** illustrates a cross-sectional side view diagram of another embodiment of an athletic positioning sole and an athletic positioning insole in accordance with the present invention;

FIG. **54** illustrates a cross-sectional side view diagram of another embodiment of an athletic positioning sole and an athletic positioning insole in accordance with the present invention;

FIG. **55** illustrates a cross-sectional outside view diagram of another embodiment of an athletic positioning insole in accordance with the present invention;

FIG. **56** illustrates a top view diagram of another embodiment of an athletic positioning insole in accordance with the present invention;

FIG. **57** illustrates a cross-sectional inside view diagram of another embodiment of an athletic positioning insole in accordance with the present invention;

FIG. **58** illustrates a cross-sectional front view diagram of another embodiment of an athletic positioning insole in accordance with the present invention;

FIG. **59** illustrates a top view diagram of another embodiment of an athletic positioning sole in accordance with the present invention;

FIG. **60** illustrates a cross-sectional outside view diagram of another embodiment of an athletic positioning sole in accordance with the present invention;

FIG. **61** illustrates a cross-sectional inside view diagram of another embodiment of an athletic positioning sole in accordance with the present invention;

FIG. **62** illustrates a cross-sectional front view diagram of another embodiment of an athletic positioning sole in accordance with the present invention;

FIG. **63** illustrates a cross-sectional front view diagram of another embodiment of an athletic positioning sole and/or insole with compensating sport specific bottom in accordance with the present invention;

FIG. **64** illustrates a cross-sectional side view diagram of another embodiment of an athletic positioning sole and/or insole with compensating sport specific bottom in accordance with the present invention;

FIG. **65** illustrates a cross-sectional front view diagram of another embodiment of shoe having an athletic positioning sole and/or insole in accordance with the present invention;

FIG. **66** illustrates a cross-sectional heel view diagram of another embodiment of an athletic positioning sole and/or insole in accordance with the present invention;

FIG. **67** illustrates an isometric diagram of an embodiment of an adjustable athletic positioning sole and/or insole in accordance with the present invention;

FIG. **68** illustrates a cross-sectional side view diagram of another embodiment of an adjustable athletic positioning sole and/or insole in accordance with the present invention;

FIG. **69** illustrates a top view diagram of another embodiment of an adjustable athletic positioning sole and/or insole in accordance with the present invention;

FIG. **70** illustrates a cross-sectional front view diagram of an embodiment of an adjustable toe section of an athletic positioning sole and/or insole in accordance with the present invention;

FIG. **71** illustrates a cross-sectional side view diagram of an embodiment of an adjustable toe section of an athletic positioning sole and/or insole in accordance with the present invention;

FIG. **72** illustrates a top view diagram of another embodiment of an adjustable ball of foot section of an athletic positioning sole and/or insole in accordance with the present invention;

FIG. **73** illustrates a cross-sectional front view diagram of an embodiment of an adjustable ball of foot section of an athletic positioning sole and/or insole in accordance with the present invention;

FIG. **74** illustrates a cross-sectional inside view diagram of an embodiment of an adjustable ball of foot section of an athletic positioning sole and/or insole in accordance with the present invention;

FIG. **75** illustrates a top view diagram of another embodiment of an adjustable heel section of an athletic positioning sole and/or insole in accordance with the present invention;

FIG. **76** illustrates a cross-sectional heel view diagram of an embodiment of an adjustable heel section of an athletic positioning sole and/or insole in accordance with the present invention;

FIG. **77** illustrates a side view diagram of an embodiment of a shoe having an adjustable athletic positioning sole and/or insole in accordance with the present invention;

FIG. **78** illustrates a front view diagram of an embodiment of a shoe having an adjustable athletic positioning sole and/or insole in accordance with the present invention;

FIG. **79** illustrates an expanded view diagram of another embodiment of an adjustable athletic positioning sole and/or insole in accordance with the present invention;

FIG. **80** illustrates a top view diagram of an embodiment of removable plates of an adjustable athletic positioning sole and/or insole in accordance with the present invention;

FIG. **81** illustrates a cross-sectional side view diagram of an embodiment of removable plates of an adjustable athletic positioning sole and/or insole in accordance with the present invention;

FIG. **82** illustrates a cross-sectional side view diagram of an embodiment of a securing mechanism for removable plates of an adjustable athletic positioning sole and/or insole in accordance with the present invention;

FIG. **83** illustrates an expanded cross-sectional side view diagram of another embodiment of an adjustable athletic positioning sole and/or insole in accordance with the present invention;

FIG. **84** illustrates a cross-sectional side view diagram of another embodiment of a securing mechanism for removable plates of an adjustable athletic positioning sole and/or insole in accordance with the present invention;

FIG. **85** illustrates a cross-sectional side view diagram of another embodiment of an adjustable athletic positioning sole and/or insole in accordance with the present invention;

FIG. **86** illustrates a cross-sectional front view diagram of another embodiment of an athletic positioning sole and/or insole in accordance with the present invention;

FIG. **87** illustrates a cross-sectional front view diagram of another embodiment of an athletic positioning sole and/or insole in accordance with the present invention;

FIG. **88** illustrates a cross-sectional front view diagram of another embodiment of an athletic positioning sole and/or insole in accordance with the present invention;

FIG. **89** illustrates a cross-sectional front view diagram of another embodiment of an athletic positioning sole and/or insole in accordance with the present invention;

FIG. **90** illustrates a cross-sectional front view diagram of another embodiment of an athletic positioning sole and/or insole in accordance with the present invention;

FIG. **91** illustrates a cross-sectional front view diagram of another embodiment of an athletic positioning sole and/or insole in accordance with the present invention;

FIG. **92** illustrates a cross-sectional front view diagram of another embodiment of an athletic positioning sole and/or insole in accordance with the present invention;

FIG. **93** illustrates a cross-sectional front view diagram of another embodiment of an athletic positioning sole and/or insole in accordance with the present invention;

FIG. **94** illustrates a cross-sectional side view diagram of another embodiment of an athletic positioning sole and/or insole in accordance with the present invention;

FIG. **95** illustrates a cross-sectional front view diagram of another embodiment of an athletic positioning sole and/or insole in accordance with the present invention;

FIG. **96** illustrates a cross-sectional front view diagram of another embodiment of an athletic positioning sole and/or insole in accordance with the present invention;

FIG. **97** illustrates a cross-sectional front view diagram of another embodiment of an athletic positioning sole and/or insole in accordance with the present invention;

FIG. **98** illustrates a cross-sectional front view diagram of another embodiment of an athletic positioning sole and/or insole in accordance with the present invention;

FIG. **99** illustrates a cross-sectional front view diagram of another embodiment of an athletic positioning sole and/or insole in accordance with the present invention;

FIG. **100** illustrates a cross-sectional front view diagram of another embodiment of an athletic positioning sole and/or insole in accordance with the present invention;

FIG. **101** illustrates a cross-sectional front view diagram of another embodiment of an adjustable athletic positioning sole and/or insole in accordance with the present invention;

FIG. **102** illustrates a cross-sectional front view diagram of another embodiment of an adjustable athletic positioning sole and/or insole in accordance with the present invention;

FIG. **103** illustrates a cross-sectional front view diagram of another embodiment of an adjustable athletic positioning sole and/or insole in accordance with the present invention;

FIG. **104** illustrates a side view diagram of an embodiment of a panel of an adjustable athletic positioning sole and/or insole in accordance with the present invention;

FIG. **105** illustrates a cross-sectional front view diagram of an embodiment of a panel of an adjustable athletic positioning sole and/or insole in accordance with the present invention;

FIG. **106** illustrates a cross-sectional front view diagram of another embodiment of an adjustable athletic positioning sole and/or insole in accordance with the present invention;

FIG. **107** illustrates a cross-sectional front view diagram of another embodiment of an adjustable athletic positioning sole and/or insole in accordance with the present invention;

FIG. **108** illustrates a cross-sectional side view diagram of another embodiment of an adjustable athletic positioning sole and/or insole in accordance with the present invention;

FIG. **109** illustrates a cross-sectional side view diagram of another embodiment of an adjustable athletic positioning sole and/or insole in accordance with the present invention;

FIG. **110** illustrates a cross-sectional top view diagram of another embodiment of an adjustable athletic positioning sole and/or insole in accordance with the present invention;

FIG. **111** illustrates a cross-sectional heel view diagram of another embodiment of a varying positioning athletic positioning sole and/or insole in accordance with the present invention;

FIG. **112** illustrates a cross-sectional front view diagram of another embodiment of a varying positioning athletic positioning sole and/or insole in accordance with the present invention;

FIG. **113** illustrates a cross-sectional front view diagram of another embodiment of a varying positioning athletic positioning sole and/or insole in accordance with the present invention;

FIG. **114** illustrates a cross-sectional front view diagram of another embodiment of a varying positioning athletic positioning sole and/or insole in accordance with the present invention;

FIG. **115** illustrates a cross-sectional front view diagram of another embodiment of a varying positioning athletic positioning sole and/or insole in accordance with the present invention;

FIG. **116** illustrates a side view diagram of an embodiment of a training shoe that includes an athletic positioning sole in accordance with the present invention;

FIG. **117** illustrates a front view diagram of an embodiment of a training shoe that includes an athletic positioning sole in accordance with the present invention;

FIG. **118** illustrates an isometric view diagram of an embodiment of an athletic positioning sole of a training shoe in accordance with the present invention;

FIG. **119** illustrates a side view diagram of another embodiment of a training shoe that includes an athletic positioning sole in accordance with the present invention;

FIG. **120** illustrates a front view diagram of another embodiment of an athletic positioning sole of a training shoe in accordance with the present invention;

FIG. **121** illustrates a bottom view diagram of another embodiment of an athletic positioning sole of a training shoe in accordance with the present invention;

FIG. **122** illustrates a side view diagram of an embodiment of baseball spikes that include an athletic positioning spike pattern in accordance with the present invention;

FIG. **123** illustrates a front view diagram of an embodiment of baseball spikes that include an athletic positioning spike pattern in accordance with the present invention;

FIG. **124** illustrates a top view diagram of another embodiment of baseball spikes that include an athletic positioning spike pattern in accordance with the present invention;

FIG. **125** illustrates a top view diagram of another embodiment of baseball spikes that include an athletic positioning spike pattern in accordance with the present invention;

FIG. **126** illustrates a heel view diagram of another embodiment of baseball spikes that include an athletic positioning spike pattern in accordance with the present invention;

FIG. **127** illustrates a heel view diagram of another embodiment of baseball spikes that include an athletic positioning spike pattern in accordance with the present invention;

FIG. **128** illustrates a diagram of an embodiment of a spike for baseball spikes that include an athletic positioning spike pattern in accordance with the present invention;

FIG. **129** illustrates a cross-section front view diagram of another embodiment of an athletic positioning pattern in accordance with the present invention;

FIG. **130** illustrates a side view diagram of an embodiment of an athletic positioning heel attachment for baseball spikes in accordance with the present invention;

FIG. **131** illustrates a bottom view diagram of an embodiment of an athletic positioning heel attachment for baseball spikes in accordance with the present invention;

FIG. **132** illustrates a bottom view diagram of another embodiment of an athletic positioning heel attachment for baseball spikes in accordance with the present invention;

FIG. **133** illustrates a bottom view diagram of an embodiment of an athletic positioning toe & ball-of-foot attachment for baseball spikes in accordance with the present invention;

FIG. **134** illustrates a heel view diagram of another embodiment of an athletic positioning heel attachment for baseball spikes in accordance with the present invention;

FIG. **135** illustrates a side view diagram of another embodiment of an athletic positioning heel attachment and athletic positioning toe & ball-of-foot attachment for baseball spikes in accordance with the present invention;

FIG. **136** illustrates a bottom view diagram of an embodiment of an athletic positioning attachment for baseball spikes in accordance with the present invention;

FIG. **137** illustrates an inside view diagram of an embodiment of an athletic positioning attachment for baseball spikes in accordance with the present invention;

FIG. **138** illustrates an outside view diagram of an embodiment of an athletic positioning attachment for baseball spikes in accordance with the present invention;

FIG. **139** illustrates a topological view diagram of an embodiment of an athletic positioning attachment for baseball spikes in accordance with the present invention;

FIG. **140** illustrates an isometric view diagram of an embodiment of a pitching training aid that includes an athletic positioning shape in accordance with the present invention;

FIG. **141** illustrates an isometric view diagram of another embodiment of a pitching training aid that includes an athletic positioning shape in accordance with the present invention;

FIG. **142** illustrates an isometric view diagram of an embodiment of a pitching rubber that includes an athletic positioning shape in accordance with the present invention;

FIG. **143** illustrates an isometric view diagram of another embodiment of a pitching rubber that includes an athletic positioning shape in accordance with the present invention;

FIG. **144** illustrates a cross-section front view diagram of an embodiment of a fitting mechanism for a shoe that includes an athletic positioning shape in accordance with the present invention;

FIG. **145** illustrates a top view diagram of an embodiment of a fitting mechanism for a shoe that includes an athletic positioning shape in accordance with the present invention;

FIG. **146** illustrates a side view diagram of an embodiment of a fitting mechanism for a shoe that includes an athletic positioning shape in accordance with the present invention;

FIG. **147** illustrates a side view diagram of another embodiment of a fitting mechanism for a shoe that includes an athletic positioning shape in accordance with the present invention;

FIG. **148** illustrates a side view diagram of another embodiment of a fitting mechanism for a shoe that includes an athletic positioning shape in accordance with the present invention;

FIG. **149** illustrates a side view diagram of another embodiment of a fitting mechanism for a shoe that includes an athletic positioning shape in accordance with the present invention; and

FIG. **150** illustrates an isometric view diagram of another embodiment of a fitting mechanism for a shoe that includes an athletic positioning shape in accordance with the present invention.

DETAILED DESCRIPTION OF THE INVENTION

FIGS. **3** and **4** illustrate a cross-sectional side view and a cross-sectional front view, respectively, of an embodiment of footwear having an apparatus that facilitates athletic positioning via an insole and/or a sole of a shoe. The shoe includes an upper section **18**, and insole section **12**, and a sole section **10**. The apparatus, which may be the insole section **12** and/or the sole section **10**, of a shoe, has an athletic positioning shape as formed by a heel section **21**, a mid-foot section **23**, and/or a toe section **25**. In general, the athletic positioning shape has the heel section **21** higher than the toe section by a particular angle (e.g., Ø**1**, which may range from a fraction of a degree to 10's of degrees) and the outside edge of the shoe higher than the inside edge of the shoe by another angle (e.g., Ø**2**, which may range from a fraction of a degree to 10's of degrees) at the ball of foot and/or toe section of the shoe.

When a person wears such a shoe, the athletic positioning shape of the insole and/or sole, places the person in an athletic position (e.g., knees slightly bent, weight more on the inside of the legs than the outside of the legs, knees position aligned with ankles and hips, and/or other athletic positioning characteristics). For example, when a pitcher wears a pair of baseball spikes that include the athletic positioning shape insole **12** and/or sole **10**, the pitcher's toe and ball of foot are a primary contact point with the ground, which shifts the pitcher's weight to the inside of his/her legs and slightly bends the pitcher's knees. In this position, the pitcher's lower half is in a more optimal position for pitching.

As another example, a batter may wear a pair of baseball spikes that include the athletic positioning shape insole **12** and/or sole **10**. When in the batter's box, the baseball spikes enable the batter to place more weight on his/her big toe and ball of foot than on the outer edge of the foot. In addition, the batter's knees are flexed and his/her weight is shifted to the inside portion of the leg as opposed to the outside portion of the leg, which promotes a better hitting stance.

The athletic positioning insole **12** and/or sole **10** may be used in any type of shoe (e.g., a dress shoe, a casual shoe, a sport specific shoe, a training shoe, and/or a combination thereof) For example, the athletic positioning insole **12** and/or sole **10** may be used in basketball shoes, tennis shoes, golf shoes, ski boots, ice skates, baseball cleats, football cleats, soccer shoes, running shoes, track shoes, cross fitness shoes, etc. For each of these sport specific shoes, the athletic positioning insole **12** and/or sole **10** are coupled to a specific bottom and a corresponding upper shoe section to promote a better athletic position for an athlete. The specific bottom may comprise one or more of a cleat pattern bottom, a baseball spike bottom, a basketball bottom, a tennis bottom, a golf bottom, an ice skate bottom, a ski boot bottom, a cross-trainer bottom, a running shoe bottom, a walking shoe bottom, a dress shoe bottom and a snowboard boot bottom. The upper section of a shoe may also have a sandal structure that includes one or more straps for securing the shoe to a foot.

FIGS. **5-7** illustrate an isometric diagram **20**, a cross-sectional side view diagram **22**, and a cross-sectional front view diagram **24** of an embodiment of an athletic positioning shape, which may be used in an insole **12** and/or sole **10** of a shoe. The athletic positioning shape includes a heel section **21**, a mid-foot section **23**, and a toe section that collectively have an overall geometric shape that corresponds to the shape of a shoe, but is shown in block form for ease of illustration. The heel section **21**, mid-foot section **23**, and toe section **25** may each be separate pieces, a uniform piece, and/or two of the sections may be a uniform piece while the other is a separate piece.

The heel section **21** has a first dimension that is substantially uniform from the outer edge to the inner edge along a back edge of the apparatus and from the back edge of the apparatus to a front portion of the heel section **21**. The toe section **25** has a second dimension at the front outer edge of the apparatus and a third dimension at the front inner edge of the apparatus. The first dimension has a magnitude that is greater than or equal to a magnitude of the second dimension and the magnitude of the second dimension is greater than a magnitude of the third dimension.

As shown, the heel section **21** of the shoe has a particular height (e.g., h**1**, which may be 1 to 10's of mm) that has a first slope (e.g., corresponding to Ø**1**) of the polarity through the mid-foot section **23** to the toe section **25** on the inside edge of the shoe. The inside edge of the shoe at the toe section may have a height of zero to a few millimeters.

As also shown, the athletic positioning shape includes a second height (e.g., h**2**) at the outer edge of the shoe at the toe section **25**, which has a second slope (e.g., corresponding to Ø**2**) of the polarity to the inside edge of the shoe. Accordingly, a third angle exists from the heel to the toe section **25** on the outer edge of the shoe.

The heel section **21** may also include a first structure corresponding to a first portion of the geometric shape, while the mid-foot section **23** may include a second structure corresponding to a second portion of the geometric shape, and the toe section **25** may include a third structure corresponding to a third portion of the geometric shape, wherein the heel section **21** is juxtaposed to the mid-foot section **23**, which is juxtaposed to the toe section **25**. For example, the heal section may be mechanically coupled to the mid-foot section **23** and the mid-foot section **23** may be mechanically coupled to the toe section **25**, wherein spacing between the sections may be near zero to several centimeters. The apparatus may also include a cushioning layer on a first surface covering at least a portion of the heel, mid-foot and/or toe sections.

While the surface on which the foot lies, the angles, and the perimeter lines are shown as straight lines and/or flat surfaces, they may be contoured lines and/or angles, contoured surfaces, contour slopes, concave and/or convex slopes and/or surfaces, and/or a combination thereof to provide a more comfortable and/or custom fit.

FIGS. **8-10** illustrate an isometric diagram **30**, a cross-sectional side view diagram **32**, and a cross-sectional front view diagram **34** of an embodiment of an athletic positioning shape, which may be used in an insole **12** and/or sole **10** of a shoe. The athletic positioning shape includes an overall geometric shape that corresponds to the shape of a shoe, but is shown in block form for ease of illustration. The athletic positioning shape further includes a heel platform **38** and an angled support platform **36**. The heel platform includes a height (h**1**) and width (w).

The angled support platform **36** includes a length (L—heel platform length), the width (w), a first height (h**1**), a second height (h**2**), an inner toe section height (e.g., 0 to a few mm), a first angle (e.g., Ø**1**) from the heel platform **38** to the toe on the inside edge of the shoe, a second angle (e.g.,

Ø2) from the outer edge of the shoe to the inside edge of the shoe, and a third angle (e.g., Ø3) from the heel platform **38** to the toe section **25** on the outer edge of the shoe.

In an example, the toe section **25** and the mid-foot section **23** collectively have a geometric shape having a first dimension along an abutment edge of the heel platform section **38** and the mid-foot section **23**, a second dimension at front outer edge of the apparatus, and a third dimension at front inner edge of the apparatus. The first dimension is substantially uniformly throughout the heel platform section **38** and has a magnitude that is greater than or equal to a magnitude of the second dimension. The magnitude of the second dimension is greater than a magnitude of the third dimension.

FIG. **11** illustrates an isometric diagram of another embodiment of an athletic positioning shape **40**, which may be used in an insole **12** and/or sole **10** of a shoe. The athletic positioning shape includes an overall geometric shape that corresponds to the shape of a shoe, but is shown in block form for ease of illustration. The athletic positioning shape further includes a heel platform **38**, an angled support platform **36**, and a toe area **42**. The heel platform **38** includes a height (h**1**), a width (w), a first length (L**4**) and a second length (L**3**), where L**3** is greater than L**4**.

The angled support platform **36** includes a length (L–L**3** and L–L**4**), a first width (w**1**), a second width corresponding to the toe area **42** (w**1**–w**2**), a first height (h**1**), a second height (h**2**), a first angle (e.g., Ø**1**) from the heel platform to the toe on the outside edge of the shoe, a second angle (e.g., Ø**2**) from the outer edge of the shoe to the edge of the toe area **42**, and a third angle (e.g., Ø**3**) from the heel platform **38** to the toe area **42** on the inner edge of the shoe.

FIG. **12** illustrates an isometric diagram **50** of another embodiment of an athletic positioning shape, which may be used in an insole **12** and/or sole **10** of a shoe. The athletic positioning shape includes an overall geometric shape that corresponds to the shape of a shoe, but is shown in block form for ease of illustration. The athletic positioning shape further includes a heel platform **38**, an angled support platform **36**, an angled edge platform **52**, and a ball-of-foot/toe area **54**. The heel platform **38** includes a height (h**1**), a width (w), and a length.

The angled support platform **36** includes a length (L–heel length), a first width (w**2**–w**1**) at heel platform **38**, a second width (w**2**–w**1**) at toe area, a first height (h**1**), a second height (h**2**), a first angle (e.g., Ø**1**) from the heel platform **38** to the toe on the outside edge of the shoe, and a second angle (e.g., Ø**2**) from the outer edge of the shoe to the edge of the toe area. The angled edge platform **52** includes a length (L–heel length), a first width (w**4**) at heel platform **38**, a second width (w**2**) at toe area, a first height (h**1**), a second height (h**2**), and a first angle (e.g., Ø**1**) from the heel platform **38** to the toe on the outside edge of the shoe.

FIG. **13** illustrates an isometric diagram **60** of another embodiment of an athletic positioning shape, which may be used in an insole **12** and/or sole **10** of a shoe. The athletic positioning shape includes an overall geometric shape that corresponds to the shape of a shoe, but is shown in block form for ease of illustration. The athletic positioning shape further includes an angled heel platform **62** and an angled support platform **36**. The angled heel platform **62** includes a first height (h**1**), a second height (h**2**), a length, a width (w), and an angle (Ø**1**), which may be in the range of −10 to 10 degrees. As shown, the angle (Ø**1**) is shown to be a positive angle such that the heel platform **62** is slightly angled from the outer edge of the shoe to the inner edge, which may be to facilitate the athletic position and/or to adjust for supination. While not shown, if the angle (Ø**1**) is negative, the heel platform **62** is slightly angled from the inner edge of the shoe to the outer edge, which may be to facilitate the athletic position and/or to adjust for pronation.

The angled support platform **36** includes a length (L–heel platform length), the width (w), a first height (h**1**), a second height (h**2**), an inner toe section height (e.g., 0 to a few mm), a first angle (e.g., Ø**4**) from the heel platform to the toe on the inside edge of the shoe, a second angle (e.g., Ø**3**) from the outer edge of the shoe to the inside edge of the shoe, and a third angle (e.g., Ø**2**) from the angled heel platform **62** to the toe section **25** on the outer edge of the shoe.

FIG. **14** illustrates an isometric diagram of another embodiment of an athletic positioning shape **70**, which may be used in an insole **12** and/or sole **10** of a shoe. The athletic positioning shape includes an overall geometric shape that corresponds to the shape of a shoe, but is shown in block form for ease of illustration. The athletic positioning shape further includes a heel platform **38**, an angled arch support platform **72**, an angled toe platform **74**, and a big toe area **76**. Note that the inside portion of the ball of foot may be in the big toe area and the rest of the ball of foot may be in the angle arch support platform.

The heel platform includes a height (h**1**), a width, and a length. The angled arch support platform includes a length (L–heel length and the big toe area length), a width, a first height (h**1**), a second height (h**2**), a first angle (e.g., Ø**2**) from the heel platform to the toe on the outside edge of the toe platform, and a second angle (e.g.. Ø**2**) from the outer edge of the shoe to the edge of the big toe area. The toe platform includes a length (L–heel length and the length of the arch platform), a width, a first height (h**2**), a second height (h**3**), and a first angle (e.g., Ø**1**) from the arch platform **72** to the toe platform **74** and a second angle (e.g., Ø**3**) from the outside edge of the shoe to the big toe area. In this embodiment, Ø**1** is greater than 02 such that the angle of the toes is greater than the angle of the arch platform and allows for more flexing of the toes.

FIG. **15** illustrates an isometric diagram **80** of another embodiment of an athletic positioning shape, which may be used in an insole **12** and/or sole **10** of a shoe. The athletic positioning shape includes an overall geometric shape that corresponds to the shape of a shoe, but is shown in block form for ease of illustration. The athletic positioning shape further includes a heel platform **38**, an angled arch support platform **72**, an angled toe platform **74**, and a big toe area **76**. Note that the inside portion of the ball of foot may be in the big toe area and the rest of the ball of foot may be in the angle arch support platform.

The heel platform includes a height (h**1**), a width, and a length. The angled arch support platform includes a length (L–heel length and the big toe area length), a width, a first height (h**1**), a second height (h**2**), a first angle (e.g., Ø**2**) from the heel platform to the toe on the outside edge of the toe platform, and a second angle (e.g., Ø**2**) from the outer edge of the shoe to the edge of the big toe area. The toe platform includes a length (L–heel length and the length of the arch platform), a width, a first height (h**2**), a second height (h**3**), and a first angle (e.g., Ø**1**) from the arch platform to the toe platform and a second angle (e.g., Ø**3**) from the outside edge of the shoe to the big toe area. In this embodiment, Ø**2** is greater than Ø**1** such that the angle of the toes is less than the angle of the arch platform, which allows for less flexing of the toes.

While the surfaces on which the foot and toes lie, the angles, and the perimeter lines are shown as straight lines and/or flat surfaces in each of the embodiments of FIGS.

5-15, they may be contoured lines and/or angles, contoured surfaces, contour slopes, concave and/or convex slopes and/or surfaces, and/or a combination thereof to provide a more comfortable and/or custom fit. Note that the shoe may further include arch support as a separate layer of the insole or integrated into the insole. Further note that the present athletic positioning shape may be used in a standalone athletic positioning insole product, in a standalone athletic positioning sole attachment, in a training shoe, and/or a sock. Still further note that with the combination of height and angles of the embodiments of FIGS. **5-15**, the wearer of a shoe that incorporates an athletic positioning insole and/or sole having one of the athletic positioning shapes is placed in an athletic position, which may promote better athletic performance and/or which may promote better biomechanical body functioning.

FIG. **16** illustrates a top view diagram of an embodiment of an athletic positioning insole **12** and/or sole **10** having one or more positioning and/or stabilizing cups. The athletic positioning insole **12** and/or sole **10** may include one or more of the athletic positioning shapes of the previous figures and/or of the subsequent figures. In this example embodiment, the athletic positioning insole **12** and/or sole **10** includes a big toe stabilizing and/or positioning cup **90** and an inner-ball of foot stabilizing and/or positioning cup **92**. The cup helps with positioning the foot on the athletic positioning insole and/or sole and may further help with stabilizing the foot in its position on the athletic positioning insole and/or sole during athletic activities. Each of the cups may be a few millimeters in depth, have sloped sides, may be of a different material then the insole and/or sole, and/or a combination thereof.

FIG. **17** illustrates a cross-sectional front view diagram of an embodiment of an athletic positioning insole and/or sole having a toe cup. As shown, the big toe fits within the toe cup **42** to provide positioning and/or stabilization of the foot within the insole **12** and/or sole **10**.

FIG. **18** illustrates a cross-sectional front view diagram of an embodiment of an athletic positioning insole **12** and/or sole **10** having a ball of foot cup. As shown, the inner portion of the ball of the foot fits within the ball of foot cup **92** to provide positioning and/or stabilization of the foot within the insole **12** and/or sole **10**.

FIG. **19** illustrates a topographical diagram **100** of another embodiment of an athletic positioning shape, which may be used in an insole **12** and/or sole **10** of a shoe. The athletic positioning shape further includes a heel platform **38**, an angled support platform **36**, a toe cup **42**, and a ball-of-foot cup **92**. With respect to the toe cup and/or the ball of foot cup, the heel platform may be 10 to 30 mm higher and may have a shape corresponding to the heel of a shoe.

The angle support platform includes a contoured shape that angles from the outer edge of the foot to the inner edge of the foot with a greater slope in the ball of foot area than in the toe area. The gradient at which the angled support platform angles may vary depending on the desired athletic positioning. In alternate implementations of this embodiment, the athletic positioning shape may omit one or both of the cups.

FIG. **20** illustrates a topographical diagram **110** of another embodiment of an athletic positioning shape, which may be used in an insole **12** and/or sole **10** of a shoe. The athletic positioning shape further includes a heel platform **38**, an angled support platform **36**, and a toe area **112**. With respect to the toe area **112**, the heel platform **38** may be 10 to 30 mm higher and may have a shape corresponding to the heel of a shoe.

The angle support platform **36** includes a contoured shape that angles from the outer edge of the foot to the inner edge of the foot with a lesser slope along the outer edge of the shape than along the inner edge of the shape. The gradient at which the angled support platform angles may vary depending on the desired athletic positioning.

FIG. **21** illustrates a topographical diagram of another embodiment of an athletic positioning shape, which may be used in an insole **12** and/or sole **10** of a shoe. The athletic positioning shape further includes a heel platform **38**, an angled support platform **36**, a toe cup **42**, and/or a ball-of-foot cup **92**. With respect to the toe cup and/or the ball-of-foot cup, the heel platform may be 10 to 30 mm higher and may have a shape corresponding to the heel of a shoe.

The angle support platform **36** includes a contoured shape that includes two angled sections. The first angled section is along the outer edge of the shape and slopes from the heel to the toe. The second angled section is from the first angled section to the inner edge of the shape and angles from the heel to the toe and from the outer edge to the inner edge. The gradient at which each of the angled section angles may vary depending on the desired athletic positioning.

FIG. **22** illustrates a topographical diagram **120** of another embodiment of an athletic positioning shape, which may be used in an insole **12** and/or sole **10** of a shoe. The athletic positioning shape further includes a heel platform **38** and an angled support platform **36**. The athletic positioning shape may further include a toe layer **122** and/or a partial ball-of-foot cup layer **124**. With respect to the big toe and/or ball of foot, the heel platform may be 10 to 30 mm higher and may have a shape corresponding to the heel of a shoe.

The angle support platform **36** includes a contoured shape that angles from the outer edge of the foot to the inner edge of the foot with a lesser slope along the outer edge of the shape than along the inner edge of the shape. The gradient at which the angled support platform angles may vary depending on the desired athletic positioning.

FIG. **23** illustrates a topographical diagram of another embodiment of an athletic positioning shape, which may be used in an insole **12** and/or sole **10** of a shoe. The athletic positioning shape further includes a heel platform **38** and an angled support platform **36** where the big toe is the lowest point **130**. Alternatively, the athletic positioning shape may further include a toe layer and omit the layer under the inside ball-of-foot to allow the inside ball-of-foot to be the lowest point. With respect to the big toe and/or ball of foot, the heel platform **38** may be 10 to 30 mm higher and may have a shape corresponding to the heel of a shoe.

The angle support platform **36** includes a contoured shape that angles from the outer edge of the foot to the inner edge of the foot with a lesser slope along the outer edge of the shape than along the inner edge of the shape. The gradient at which the angled support platform angles may vary depending on the desired athletic positioning.

With the combination of heights and angles of the embodiments of FIGS. **19-23**, the wearer of a shoe that incorporates an athletic positioning insole and/or sole having one of the athletic positioning shapes is placed in an athletic position, which may promote better athletic performance and/or which may promote better biomechanical body functioning. Note that a shoe, which incorporates one of the athletic positioning shapes of FIGS. **19-23**, may further include arch support as a separate layer of the insole and/or integrated into the insole. Further note that one or more of the athletic positioning shapes may be used in a standalone

athletic positioning insole product, in a standalone athletic positioning sole attachment, in a training shoe, and/or a sock.

FIGS. **24-33** illustrate layers of another embodiment of an athletic positioning shape for an insole **12** and/or a sole **10**. Each layer may be of the same material (e.g., leather, rubber, foam, etc.), of a different material, or a combination thereof. For example, layers **1-4** may be of a rigid material (e.g., rubber, leather, plastic, carbon fiber, etc.) while layers **5-10** may be of a compressible material (e.g., foam, liquid material such as water, gel, etc.).

FIGS. **34** and **35** illustrate a cross-sectional side view diagram and a cross-sectional front view diagram of another embodiment of an athletic positioning sole **10** and/or insole **12** that includes a compressible material section **140** and a rigid material section **142**. In this embodiment, the compressible material section **140** is on top of the rigid material section **142** (i.e., closer to the foot). The compressible material section **140** includes one or more of the athletic positioning shapes and comprises a compressible material (e.g., foam, a soft rubber, memory foam, compressible housing that holds a liquid material (e.g., water, gel, etc.), and/or any other material that compresses under pressure and substantially returns to its uncompressed shape when the pressure is removed).

The rigid section **142** includes one or more the athletic positioning shapes, which may be the same one as used in the compressible material section **140** or different, and comprises a rigid material. The rigid material has minimal compression under pressure but allows for a desired level of flexion of the foot during use of the shoe. For example, the rigid material may be a rubber, a carbon fiber, leather, plastic, Polyurethane, any material that provides a rigid structure for the shoe, and/or a combination thereof.

FIGS. **36** and **37** illustrate a cross-sectional side view diagram and a cross-sectional front view diagram of another embodiment of an athletic positioning sole **10** and/or insole **12** that includes a compressible material section and a rigid material section. In this embodiment, the compressible material section **140** is under the rigid material section **142** (i.e., farther from the foot). The compressible material section **140** includes one or more of the athletic positioning shapes and comprises a compressible material (examples previously provided). The rigid section **142** includes one or more the athletic positioning shapes, which may be the same one as used in the compressible material section **140** or different, and comprises a rigid material. The rigid material has minimal compression under pressure but allows for a desired level of flexion of the foot during use of the shoe (examples previously provided).

FIG. **38** illustrates a cross-sectional side view diagram of another embodiment of an athletic positioning sole **10** and/or insole **12** that includes a compressible material section **140**, a rigid material section **142**, and a recoil material section **144**. In this embodiment, the compressible material section is layered on top of the recoil material section **144**, which is layered on top of the rigid material section **142**. The compressible material section **140** includes one or more of the athletic positioning shapes and comprises a compressible material (examples previously provided). The rigid section includes one or more the athletic positioning shapes, which may be the same one as used in the compressible material section or different, and comprises a rigid material. The rigid material has minimal compression under pressure but allows for a desired level of flexion of the foot during use of the shoe (examples previously provided).

The recoil section **144** includes one or more the athletic positioning shapes, which may be the same as one of the ones used in the compressible material section **140** and/or on the rigid material section **142**, or a different shape. The recoil section **144** comprises a recoil material that, when placed under a force **146**, converts the force into a potential energy and, when the force is released, converts the potential energy into kinetic energy **148**. In this manner, the force that is generated by pushing off in the shoe is used to propel the foot in a desired direction when the force is released. For example, when a pitcher loads his/her drive leg, a force is applied to the shoe. When the pitcher begins his/her motion and pushes off the rubber, the force is released and the recoil material section **144** applies a force to the foot in a direction toward home plate.

The recoil material **144** may be a series of springs embedded in the recoil material layer, may be a resilient rubber material, some other material that provides a recoil effect, and/or a combination thereof. In addition, the recoil material may be imbalanced such that the direction of the recoil force is between perpendicular and parallel to the foot force. For example, if the recoil material includes a series of springs, the springs along the outer edge of the shoe may have a greater recoil force than those on the inner edge of the shoe. As such, when the foot force is released, the springs on the outer edge of the shoe "push" harder than the springs on the inner edge of the shoe, thus creating a more horizontal force.

FIG. **39** illustrates a cross-sectional side view diagram of another embodiment of an athletic positioning sole and/or insole that includes a compressible material section and a recoil material section. In this embodiment, the compressible material section is layered on top of the recoil material section. The compressible material section includes one or more of the athletic positioning shapes and comprises a compressible material (examples previously provided).

The recoil section includes one or more the athletic positioning shapes, which may be the same as the one used in the compressible material section or a different shape. The recoil section comprises a recoil material that, when placed under a force, converts the force into a potential energy and, when the force is released, converts the potential energy into kinetic energy.

FIG. **40** illustrates a cross-sectional side view diagram of another embodiment of an athletic positioning sole **10** and/or insole **12** that includes a compressible material section **140**, a rigid material section **142**, and a recoil material section **144**. In this embodiment, the compressible material section **140** is layered on top of the rigid material section **142**, which is layered on top of the recoil material section **144**. The compressible material section **140** includes one or more of the athletic positioning shapes and comprises a compressible material (examples previously provided). The rigid section **142** includes one or more the athletic positioning shapes, which may be the same one as used in the compressible material section **140** or different, and comprises a rigid material. The rigid material **142** has minimal compression under pressure but allows for a desired level of flexion of the foot during use of the shoe (examples previously provided).

The recoil section **144** includes one or more the athletic positioning shapes, which may be the same as one of the ones used in the compressible material section **140** and/or on the rigid material section **142**, or a different shape. The recoil section **144** comprises a recoil material that, when placed under a force, converts the force into a potential energy and, when the force is released, converts the potential energy into kinetic energy.

FIG. **41** illustrates a cross-sectional side view diagram of another embodiment of an athletic positioning sole **10** and/or insole **12** that includes a compressible material section **140** and a recoil material section **144**. In this embodiment, the compressible material section **140** is layered below the recoil material section **144**. The compressible material section **140** includes one or more of the athletic positioning shapes and comprises a compressible material (examples previously provided).

The recoil section **144** includes one or more the athletic positioning shapes, which may be the same as the one used in the compressible material section **140** or a different shape. The recoil section **144** comprises a recoil material that, when placed under a force, converts the force into a potential energy and, when the force is released, converts the potential energy into kinetic energy.

FIG. **42** illustrates a cross-sectional side view diagram of another embodiment of an athletic positioning sole **10** and/or insole **12** that includes a first compressible material section **150**, a second compressible material section **152**, and a rigid material section **142**. In this embodiment, the second compressible material section **152** is layered above the first compressible material section **150**, which is layered above the rigid material section **142**. The first compressible material section **150** includes one or more of the athletic positioning shapes and comprises a first compressible material. The second compressible material section **152** includes one or more of the athletic positioning shapes and comprises a second compressible material. For example, the first compressible material may comprise a flexible housing containing a gel and the second compressible material may comprise a memory foam.

The rigid section **142** includes one or more the athletic positioning shapes, which may be the same as one of the ones used in the first or second compressible material sections or different. The rigid section **142** comprises a rigid material, which has minimal compression under pressure but allows for a desired level of flexion of the foot during use of the shoe.

FIG. **43** illustrates a cross-sectional side view diagram of another embodiment of an athletic positioning sole **10** and/or insole **12** that includes a first compressible material section **150**, a second compressible material section **152**, and a recoil material section **144**. In this embodiment, the first compressible material section **150** is layered above the recoil material section **144**, which is layered above the second compressible material section **152**. The first compressible material section **150** includes one or more of the athletic positioning shapes and comprises a first compressible material. The second compressible material section **152** includes one or more of the athletic positioning shapes and comprises a second compressible material. For example, the first compressible material may be more compressible material than that of the second compressible material.

The recoil section **144** includes one or more the athletic positioning shapes, which may be the same as the one of the ones used in the first or second compressible material sections or different. The recoil section **144** comprises a recoil material that, when placed under a force, converts the force into a potential energy and, when the force is released, converts the potential energy into kinetic energy.

FIG. **44** illustrates an isometric diagram of an embodiment of an athletic positioning sole that includes an overall geometric shape that corresponds to the shape of a shoe, but is shown in block form for ease of illustration. As shown, the heel of the sole has a particular height (e.g., h**1**, which may be 1's to 10's of mm) that slopes at an angle (e.g., Ø**1**) to the toe on the inside edge of the sole. The inside edge of the sole at the toe section **25** may have a height of zero to a few millimeters with respect to the insole of the shoe.

As also shown, the athletic positioning sole includes a second height (e.g., h**2**) at the outer edge of the sole at the toe section, which tapers at an angle (e.g., Ø**2**) to the inside edge of the sole. Accordingly, a third angle exists from the heel to the toe section **25** on the outer edge of the sole.

FIG. **45** illustrates an isometric diagram of another embodiment of an athletic positioning sole that includes an overall geometric shape that corresponds to the shape of a shoe, but is shown in block form for ease of illustration. The athletic positioning sole further includes a heel platform and an angled support platform. The heel platform includes a height (h**1**), a length (L**1**), and a width (w).

The angled support platform includes a length (L–heel platform length), the width (w), a first height (h**1**), a second height (h**2**), an inner toe section height (e.g., 0 to a few mm), a first angle (e.g., Ø**1**) from the heel platform to the toe on the inside edge of the shoe, a second angle (e.g., Ø**2**) from the outer edge of the shoe to the inside edge of the shoe, and a third angle from the heel platform **38** to the toe section **25** on the outer edge of the shoe.

FIG. **46** illustrates an isometric diagram of another embodiment of an athletic positioning sole that includes an overall geometric shape that corresponds to the shape of a shoe, but is shown in block form for ease of illustration. The athletic positioning sole further includes a heel platform **38**, an angled support platform **36**, and an angled edge platform **160**. The heel platform includes a height (h**1**), a width (w), and a length.

The angled support platform **36** includes a length (L–heel length), a first width (w–width of the angled edge platform), a first height (h**1**), a second height (h**2**), a first angle (e.g., Ø**1**) from the heel platform **38** to the toe on the outside edge of the shoe, and a second angle (e.g., Ø**2**) from the outer edge of the shoe to the edge of the toe area. The angled edge platform includes a length (L–heel length), a first width (w–width of the angled support platform), a first height (h**1**), a second height (h**2**), and a first angle (e.g., Ø**1**) from the heel platform to the toe on the outside edge of the shoe.

FIG. **47** illustrates an isometric diagram of another embodiment of an athletic positioning sole that includes an overall geometric shape that corresponds to the shape of a shoe, but is shown in block form for ease of illustration. The athletic positioning sole further includes a heel platform **38**, an angled support platform **36**, and a ball-of-foot/toe area **112**. The heel platform **38** includes a height (h**1**), a width (w), and a length (L**1**).

The angled support platform **36** includes a length (L–L**1**), a first width (w), a second width corresponding to the toe area (w–width of toe area), a first height (h**1**), a second height (h**2**), a first angle (e.g., Ø**1**) from the heel platform **38** to the toe on the outside edge of the shoe, a second angle (e.g., Ø**2**) from the outer edge of the shoe to the edge of the toe area, and a third angle (e.g., Ø**3**) from the heel platform **38** to the toe area **112** on the inner edge of the shoe.

For each of the athletic positioning soles of FIGS. **44-47**, the surface on which the specific sole pattern lies, the angles, and the perimeter lines are shown as straight lines and/or flat surfaces; however, they may be contoured lines and/or angles, contoured surfaces, contour slopes, concave and/or convex slopes and/or surfaces, and/or a combination thereof to provide a more comfortable and/or custom fit. In addition, each of the athletic positioning soles of FIGS. **44-47** may be flipped such that the angled surface is coupled to the shoe and the other side is coupled to a specific sole pattern (e.g.,

basketball, tennis, baseball, football, dress shoe, casual shoe, cross-training, etc.). In either implementation of coupling the athletic positioning sole to the remainder of the shoe, the wearer of the shoe is placed in an athletic position that may promote better athletic performance.

FIGS. **48-51** illustrates a cross-sectional side view diagram, a top view diagram, a bottom view diagram, and a cross-sectional front view diagram of an embodiment of an athletic positioning sole **10** and an athletic positioning insole **12**. The athletic positioning insole may have one of the athletic positioning shapes and may be comprised of a compressible material **140**, a recoil material **144**, and/or a rigid material **142**. Similarly, the athletic positioning sole may have one of the athletic positioning shapes and may be comprised of a compressible material, a recoil material, and/or a rigid material.

In this embodiment, the combination of the sole and the insole provide the overall athletic positioning shape for a shoe. For example, the heel height of the combined insole and sole is h**1**, which may be 10-30 mm or more, and the outer edge toe height of the combined insole and sole is h**2**, which may be 5-15 mm. In the present example, the sole and the insole contribute equally to the heights (h**1** and h**2**); however the ratio of may range from 50/50 to 90/10 to 10/90 (insole/sole).

The heel-to-toe angles (e.g., Ø**1** for inner edge and Ø**3** for outer edge) are provided by a combination of the heel to toe angles of each of the insole and the sole. In the present example, the sole **10** and the insole **12** contribute equally to the heel-to-toe angles (Ø**1** and Ø**3**); however the ratio of may range from 50/50 to 90/10 to 10/90 (insole/sole). Similarly, the insole **12** and sole **10** are shown to equally contribute to the outer edge to inner edge angle (e.g., Ø**2**), however the ratio of may range from 50/50 to 90/10 to 10/90 (insole/sole).

FIG. **52** illustrates a cross-sectional side view diagram of another embodiment of an athletic positioning sole and an athletic positioning insole. The athletic positioning insole may have one of the athletic positioning shapes and may be comprised of one or more compressible materials **170** and/or of one or more rigid materials **172**. The athletic positioning sole may have one of the athletic positioning shapes and may be comprised of one or more compressible materials **170** and/or of one or more rigid materials **172**. For example, the rigid material **172** may be a rubber, carbon fiber, and/or plastic that is/are traditionally used for athletic shoe soles and the compressible material **170** may be memory foam, foam, and/or a gel that is/are traditionally used for athletic shoe insoles.

FIG. **53** illustrates a cross-sectional side view diagram of another embodiment of an athletic positioning sole and an athletic positioning insole. The athletic positioning insole may have one of the athletic positioning shapes and may be comprised of one or more compressible materials **170** and/or of one or more rigid materials **172**. The athletic positioning sole may have one of the athletic positioning shapes and may be comprised of one or more rigid materials **172**.

FIG. **54** illustrates a cross-sectional side view diagram of another embodiment of an athletic positioning sole and an athletic positioning insole. The athletic positioning insole may have one of the athletic positioning shapes and may be comprised of one or more compressible materials **170**. The athletic positioning sole may have one of the athletic positioning shapes and may be comprised of one or more rigid materials **172**. For example, the sole may be comprised of a rubber, carbon fiber, and/or plastic that is/are traditionally used for athletic shoe soles and the insole may be comprised of memory foam, foam, and/or a gel that is/are traditionally used for athletic shoe insoles.

For each of the athletic positioning soles of FIGS. **48-54**, the angled surfaces of the sole and/or insole, the angles, and the perimeter lines are shown as straight lines and/or flat surfaces; however, they may be contoured lines and/or angles, contoured surfaces, contour slopes, concave and/or convex slopes and/or surfaces, and/or a combination thereof to provide a more comfortable and/or custom fit. In addition, the athletic positioning soles of FIGS. **48-54** may be flipped such that the angled surface is coupled to the shoe and the other side is coupled to a specific sole pattern (e.g., basketball, tennis, baseball, football, dress shoe, casual shoe, cross-training, etc.). In either implementation of coupling the athletic positioning sole to the remainder of the shoe, the wearer of the shoe is placed in an athletic position that may promote better athletic performance.

FIGS. **55-58** illustrate a cross-sectional outside view diagram, a top view diagram, a cross-sectional inside view diagram, and a cross-sectional front view diagram of a specific embodiment of an athletic positioning insole. The insole includes a heel platform, an angled support platform, and a partial ball-of-foot cup. The insole may have one of the athletic positioning shapes and is comprised of one or more compressible materials. For a given athletic positioning shape, the height of the heel section **21** is ⅜ inch and the length & width of the insole correspond to an 11½ size man's shoe (which can be adjusted for any shoe size). The big toe section is ⅛ inch thick and the little toe section is ¼ inch thick. The angles are based on the dimensions of the lengths, widths, and heights of the insole, where the dimensions may be for a pre-compressed condition or a compressed condition.

FIGS. **59-62** illustrate a top view diagram, a cross-sectional outside view diagram, a cross-sectional inside view diagram, and a cross-sectional front view diagram of a specific embodiment of an athletic positioning sole. The sole includes a heel platform **38**, an angled support platform **36**, and an upper shoe connecting sides **180**. The sole may have one of the athletic positioning shapes and is comprised of one or more rigid materials **172** and/or compressible materials **170**. For a given athletic positioning shape, the height of the heel section **21** is ½ inch and the length & width of the sole correspond to an 11½ size man's shoe (which can be adjusted for any shoe size). The big toe section is ⅛ inch thick and the little toe section is ¼ inch thick. The angles are based on the dimensions of the lengths, widths, and heights of the insole, where the dimensions may be for a pre-compressed condition or a compressed condition. The sizing of the sides may vary depending on the connecting mechanism (e.g., stitch, glue, stable, fuse, etc.) to the upper shoe section.

FIGS. **63-64** illustrate a cross-sectional front view diagram and a cross-sectional inside view diagram of another embodiment of an athletic positioning sole **10** and/or insole **12** with compensating sport specific bottom **190**. The athletic positioning insole may have one of the athletic positioning shapes and may be comprised of a compressible material, a recoil material, and/or a rigid material. Similarly, the athletic positioning sole may have one of the athletic positioning shapes and may be comprised of a compressible material, a recoil material, and/or a rigid material. Note that a shoe implemented in accordance with this embodiment may include the athletic positioning sole and a conventional insole, a conventional sole and an athletic positioning insole, or may include an athletic positioning insole and an athletic positioning sole.

In an athletic position, more pressure is applied on the inside edge of the shoe at the ball-of-foot area than on other parts of the shoe. To compensate for this increased pressure, which could lead to greater wear and tear, the sport specific bottom **190** is thicker in this region than along the outer edge of the shoe. In addition, the sport specific sole may be thicker or equally as thick in the inner ball-of-foot region as in the heel region of the shoe. The sport specific bottom **190** may have an overall shape that reduces shock on the body when running and/or when making explosive movement.

FIG. **65** illustrates a cross-sectional front view diagram of another embodiment of a shoe having an athletic positioning sole and/or insole and a sport specific bottom that includes an upper shoe securing area **200**. The athletic positioning insole may have one of the athletic positioning shapes and may be comprised of a compressible material, a recoil material, and/or a rigid material. Similarly, the athletic positioning sole may have one of the athletic positioning shapes and may be comprised of a compressible material, a recoil material, and/or a rigid material. Note that a shoe implemented in accordance with this embodiment may include the athletic positioning sole and a conventional insole, a conventional sole and an athletic positioning insole, or may include an athletic positioning insole and an athletic positioning sole.

The sport specific bottom **190** includes a sport specific tread pattern (e.g., tennis, basketball, training, running, etc.), a spike and/or cleat pattern (e.g., baseball, football, golf, soccer, etc.), or a sliding coupling pattern (e.g., ice skates, ski boots, snowboard boots, rollerblades, etc.). In addition, the sport specific bottom **190** includes the upper securing area **200** to secure the sole assembly (e.g., sport specific bottom, the athletic positioning insole, and/or the athletic positioning sole) to an upper shoe **202**, which may be a conventional upper shoe for a given sport, activity, or dress, or may an upper shoe as described in subsequent figures. The sole assembly may be secured to the upper shoe **202** by stitching, gluing, stapling, fusing, riveting, etc. The sport specific bottom may also include a sloped bottom as discussed with reference to FIGS. **63** and **64**.

FIG. **66** illustrates a cross-sectional heel view diagram of another embodiment of an athletic positioning sole **10** and/or insole **12** and a sport specific bottom **190**. The athletic positioning insole may have one of the athletic positioning shapes and may be comprised of a compressible material, a recoil material, and/or a rigid material. Similarly, the athletic positioning sole may have one of the athletic positioning shapes and may be comprised of a compressible material, a recoil material, and/or a rigid material. Note that a shoe implemented in accordance with this embodiment may include the athletic positioning sole and a conventional insole, a conventional sole and an athletic positioning insole, or may include an athletic positioning insole and an athletic positioning sole.

The sport specific bottom **190** includes a sport specific tread pattern (e.g., tennis, basketball, training, running, etc.), a spike and/or cleat pattern (e.g., baseball, football, golf, soccer, etc.), or a sliding coupling pattern **212** (e.g., ice skates, ski boots, snowboard boots, rollerblades, etc.). In addition, the sport specific bottom **190** includes a wider base than its upper portion to provide lateral stability. As shown, the outer edge of the sport specific bottom **190** angles in at a first angle (e.g., Ø**1**) and the inner edge of the bottom angles in at a second angle (e.g., Ø**2**). When the shoe includes the athletic positioning insole **12** and/or sole **10**, it may be desirable to have the first angle larger than the second to provide more lateral stability, but both angles may be equal. The sport specific bottom **190** may also include a sloped bottom as discussed with reference to FIGS. **63** and **64**. Note that the heel section may include a heel cup area **214**

FIG. **67** illustrates an isometric diagram of an embodiment of an adjustable athletic positioning sole **10** and/or insole **12**. The insole **12** and/or sole **10** includes a fixed area **220** and an adjustable area **222**, each area may be of one of the athletic positioning shapes. The fixed area **220** provides a positioning of a big toe area **76** at a lower position than a heel area **21** and at a lower position than an outer edge area. In addition, the fixed area **220** may include one or more compressible materials, one or more rigid materials, and/or one or more recoil materials.

The adjustable area **222** may be implemented in a variety of ways, which will be discussed in subsequent drawings. In general, the adjustable area **222** allows for the heights, widths, lengths, and/or angles of the athletic positioning insole and/or athletic positioning sole to be adjusted from a minimum setting (e.g., the fixed area dimensions) to a maximum setting (e.g., the fixed area dimensions plus the adjustable area dimensions). The present figures illustrate a left shoe implementation, but the concepts are equally applicable to a right shoe.

FIG. **68** illustrates a cross-sectional side view diagram of another embodiment of an adjustable athletic positioning sole **10** and/or insole **12** having an alternating fixed area **222** and adjustable area **220**. The first adjustable area (e.g., the lowest one) allows the height of the heel platform **38** to be adjusted. The second adjustable area (e.g., the next one up) allows for the angled support platform **36** to be adjusted with minimal adjustment to the toe area **25**. The third adjustable area (e.g., the top one) allows for the overall athletic position shape to be adjusted.

In an example, the fixed section **222** includes a plurality of fixed subsections and the adjustable section **220** includes a plurality of adjustable subsections, which are layered to vary the lower positioning of the big toe area **76** with respect to the heel area **21** and/or the big toe area **76** with respect to the outer edge area.

FIG. **69** illustrates a top view diagram of another embodiment of an adjustable athletic positioning sole **10** and/or insole **12** that includes an adjustable heel section **230**, an adjustable ball of foot and arch area **232**, and an adjustable toe area **234**. Each adjustable area **220** may be implemented using an air bladder structure that can be expanded from a minimal size (e.g., height, width, length, and/or angles) to a maximum size. Accordingly, each section would need an air intake nozzle to allow a needle to be inserted to add or remove air from the air bladder. In this instance, the air bladder would maintain the minimal shape even when all of the air is removed and expands to the maximum shape when sufficient air is added.

Alternatively, each adjustable area may include a fixed section **222** and an adjustable section **220**. In an example, the fixed section **222** includes a fixed toe area, a fixed mid-foot area and a fixed heel area and the adjustable section **220** includes an adjustable toe area that is positioned proximal to the fixed toe area, an adjustable mid-foot area that is positioned proximal to the fixed mid-foot area, and an adjustable heel area that is positioned proximal to the fixed heel area. The fixed section **222** has a shape as shown and is comprised of one or more compressible materials, one or more rigid materials, and/or one or more recoil materials. The adjustable section **220** may be an air bladder, stackable plates, and/or another adjusting mechanism.

FIGS. **70** and **71** illustrate a cross-sectional front view diagram and a cross-sectional side view diagram of an embodiment of an adjustable toe section **234** of an athletic positioning sole **10** and/or insole **12**. The adjustable toe section **234** may be adjusted from a minimal size (e.g., height, width, length, and/or angles) to a maximum size. For example, the toe section **234** includes an air bladder that has a minimal shape corresponding to the toe section **234** of one of the athletic positioning shapes, which can be expanded to a maximum shape. As another example, the toe section **234** includes a fixed section **222** that has a minimal shape corresponding to the toe section **234** of one of the athletic positioning shapes and an adjustable section **220** (e.g., air bladder, stackable plates, etc.) that allows the toe section **234** to expand to its maximum shape.

FIGS. **72-74** illustrate a top view diagram, a cross-sectional front view diagram, and a cross-sectional inside view diagram of another embodiment of an adjustable ball of foot section of an athletic positioning sole **10** and/or insole **12**. The adjustable ball of foot section **232** may be adjusted from a minimal size (e.g., height, width, length, and/or angles) to a maximum size. For example, the ball of foot section **232** includes an air bladder that has a minimal shape corresponding to the ball of foot and/or arch section **232** of one of the athletic positioning shapes, which can be expanded to a maximum shape. As another example, the ball of foot section includes a fixed section that has a minimal shape corresponding to the ball of foot and/or arch section of one of the athletic positioning shapes and an adjustable section (e.g., air bladder, stackable plates, etc.) that allows the ball of foot section to expand to its maximum shape.

FIGS. **75** and **76** illustrate a top view diagram and a cross-sectional heel view diagram of another embodiment of an adjustable heel section of an athletic positioning sole **10** and/or insole **12**. The adjustable heel section **230** may be adjusted from a minimal size (e.g., height, width, length, and/or angles) to a maximum size. For example, the heel section includes an air bladder that has a minimal shape corresponding to the heel section of one of the athletic positioning shapes, which can be expanded to a maximum shape. As another example, the heel section **230** includes a fixed section that has a minimal shape corresponding to the heel section of one of the athletic positioning shapes and an adjustable section (e.g., air bladder, stackable plates, etc.) that allows the heel section to expand to its maximum shape.

FIG. **77** illustrates a side view diagram of an embodiment of a shoe having an adjustable athletic positioning sole. The shoe includes a sport specific lower plate **240** of the sole (which includes the sport specific sole pattern), one or more removable plates of the sole **242**, a fixed upper plate of the sole **244**, and a shoe top **246**. The shoe may further include an athletic positioning insole (not shown), which may be fixed or adjustable.

The fixed upper plate **244** is secured to the shoe top **246** using conventional means (e.g., glue, stitching, fusing, stapling, riveting, etc.). The fixed upper plate **244** includes a securing mechanism that allows a removable plate or the sport specific bottom (if no removable plates are used) to be mechanically coupled thereto. In addition, the fixed upper plate **244** includes a shape that corresponds to one of the athletic positioning shapes (or a relatively flat shape) and is comprised of one or more rigid materials and/or one or more recoil materials.

The sport specific plate includes a sport specific pattern **240** and a securing mechanism that allows it to be mechanically coupled to a removable plate **242** or to the sport specific bottom **240** (if no removable plates are used). The sport specific lower plate **240** includes a shape that corresponds to one of the athletic positioning shapes (or a relatively flat shape) and is comprised of one or more rigid materials and/or one or more recoil materials.

Each of the removable plates **242** includes a securing mechanism that allows it to be mechanically coupled to another removable plate, to the fixed upper plate **244**, or to the sport specific bottom **240**. Each of the removable plates includes a shape that corresponds to one of the athletic positioning shapes (which, from plate to plate, may be different and/or of the same shape but of different dimensions) and is comprised of one or more rigid materials and/or one or more recoil materials (which, from plate to plate, may be different or the same).

FIG. **78** illustrates a front view diagram of an embodiment of a shoe having an adjustable athletic positioning sole. The shoe, as discussed with reference to FIG. **77**, includes a sport specific lower plate of the sole **240** (which includes the sport specific sole pattern), one or more removable plates of the sole **242**, a fixed upper plate of the sole **244**, and a shoe top **246**. The shoe may further include an athletic positioning insole (not shown), which may be fixed or adjustable.

FIG. **79** illustrates an expanded view diagram of another embodiment of an adjustable athletic positioning sole, which includes the fixed upper plate **244**, one or more removable plates **242**, and a sport specific lower plate **240**. Each of the plates includes a securing mechanism, a shape that corresponds to one of the athletic positioning shapes (or a relatively flat shape) and is comprised of one or more rigid materials and/or one or more recoil materials.

An adjustable athletic positioning insole includes a fixed upper insole plate **244**, one or more removable insole plates **242**, and a lower insole plate **240**. Each of the plates includes a securing mechanism, a shape that corresponds to one of the athletic positioning shapes (or a relatively flat shape) and is comprised of one or more rigid materials, one or more compressible materials, and/or one or more recoil materials.

FIG. **80** illustrates a top view diagram of an embodiment of the fixed upper plate, one or more of the removable plates, and a lower plate of an adjustable athletic positioning sole and/or of an adjustable athletic positioning insole. The securing mechanisms **250** are positioned throughout the plate to provide secure and reliable mechanical fastening of one plate to another. Note that more or less locations of the securing mechanisms **250** may be included on each plate. Further note that each plate includes substantially the same pattern of securing mechanisms.

FIG. **81** illustrates a cross-sectional side view diagram of an embodiment of plates of an adjustable athletic positioning sole **10** and/or insole **12** mechanically coupled together at one of the securing mechanisms **268** of the pattern of securing mechanisms. The fixed upper plate **262** (of the sole or insole) includes a base securing mechanism **260** (e.g., a custom nut having an encircling flange to maintain its position in the fixed upper plate) at one or more securing mechanism positions of the securing mechanism pattern. Each of the other plates **264** (e.g., the lower plate **270** and the removable plates) includes a securing mechanism **268** (e.g., a custom bolt with a threaded receptacle head) at one or more securing mechanism positions of the securing mechanism pattern. Each of the plates **264** includes a notched receptacle **272**, which may be tapered, for holding the respective securing mechanism **268** in place. In addition, each plate includes a securing ledge, which allows the securing mechanisms to be screwed together to produce a secure butt joint between the plates.

The lower plate securing mechanism **268** may include a threaded plug **274**, which may include a cap, to substantially cover the open area of the securing mechanism holding area. Each of the securing mechanisms **268** includes a standard drive head pattern (e.g., Phillips, straight blade, star, Allen wrench, etc.) or a custom drive head pattern, which requires a proprietary tool for securing and unsecuring plates.

FIG. **82** illustrates a cross-sectional side view diagram of an embodiment of a securing mechanism **268** for removable plates of an adjustable athletic positioning sole and/or insole. The securing mechanism **268** includes a threaded bolt section **280**, a fastening ledge **282**, a pressure fit ring **284**, and a threaded receptacle **286**. The thread count may be any number so long as at least one full turn is required to secure the plates together. The fastening ledge presses against the inside edge of the plate as it is screwed into the threaded receptacle of the securing mechanism of the other plate, which presses against the notched receptacle **272**.

FIG. **83** illustrates an expanded cross-sectional side view diagram of another embodiment of an adjustable athletic positioning sole **10** and/or insole **12** at one of the securing mechanisms **268** of the pattern of securing mechanisms. The adjustable insole and/or sole includes a fixed upper plate **244**, one or more removable plates **242**, and a lower plate **240**. The fixed upper plate **244** includes a keyhole receptacle **290**, which is illustrated in FIG. **84**, at one or more securing mechanism positions of the securing mechanism pattern. Each of the removable plates includes a keyhole receptacle and a mating peg **292** at one or more securing mechanism positions of the securing mechanism pattern. The lower plate **240** includes a mating peg **292** at one or more securing mechanism positions of the securing mechanism pattern.

FIG. **85** illustrates a cross-sectional side view diagram of another embodiment of an adjustable athletic positioning sole **10** and/or insole **12** at one of the securing mechanisms **268** of the pattern of securing mechanisms. In this example, the mating pegs **292** are inserted and moved into position to provide mechanical coupling of the plates together. In an example, the keyhole **290** and peg assembly **292** may be used at the big toe—ball of foot area where the material is thinner and the securing mechanism of FIGS. **81** and **82** would be used at other securing mechanism positions.

FIG. **86** illustrates a cross-sectional front view diagram of another embodiment of an athletic positioning sole **10** and/or insole **12** that includes a recoil component. The recoil component may be achieved by including a series of springs, stiffened memory foam, and/or resilient rubber material. The recoil component may have one of the athletic positioning shapes or it may be a layer in an athletic positioning sole and/or insole.

The recoil component functions to provide a recoil force **300** after a foot force **302** is removed. The force may be in the opposite direction of the foot force or at some angle thereof.

FIG. **87** illustrates a cross-sectional front view diagram of another embodiment of an athletic positioning sole **10** and/or insole **12** that includes a recoil component within a housing. The recoil component may have one of the athletic positioning shapes or it may be a layer in an athletic positioning sole and/or insole. The recoil component **310** includes a series of springs, stiffened memory foam, and/or resilient rubber material that have more recoil force on the outer edge of the shoe **312** versus the inner edge of the shoe **314**. In this manner, the direction of the recoil force is not opposite that of the foot force, but more horizontal and in the direction from the outside of the shoe to the inside of the shoe.

FIG. **88** illustrates a cross-sectional front view diagram of another embodiment of an athletic positioning sole **10** and/or insole **12** that includes a recoil layer **320**, a base layer **322**, and a foot layer **324**. The base layer **322** includes one of the athletic positioning shapes and may be comprises of one or more rigid materials and/or one or more compressible materials. The foot layer may include arch support and may include a relatively flat shape or it may include one of the athletic positioning shapes. In addition, the foot layer **324** may be comprised of one or more compressible materials. The recoil layer **320** includes one or more recoil materials and may include a relatively flat shape or it may include one of the athletic positioning shapes.

FIG. **89** illustrates a cross-sectional front view diagram of another embodiment of a shoe that includes an athletic positioning sole **10**, an athletic positioning insole **12**, and an upper shoe **330**. From the font perspective, the upper shoe **330** forms a toe box around and over the toe area. From a side perspective, the upper shoe **330** forms the remainder of the shoe for containing the foot. The upper shoe **330** may include one or more materials (e.g., leather, a synthetic material, plastic, cotton, a wicking material, etc.) to form the sides, heel, tongue, and/or toe areas of the shoe. The upper shoe **330** may further include a toe cover area of material similar to that of the sole **10**, which provides at least a portion of the toe box.

In this embodiment, the insole comprises a compressible material, which, under a load of the wearer, compresses by a few millimeters to 10 or more millimeters. The upper shoe **330** is mechanically coupled (e.g., stitched, glued, fused, stapled, etc.) to the insole and/or sole such that, as the insole **12** compresses and decompresses, the upper shoe moves accordingly to maintain the toe box at a desired size and/or shape. For example, the upper shoe **330** is mechanically coupled to the upper portion of the insole **12**, which is within a vertically extended outersole portion of the sole **10**, such that the upper shoe **330** moves with the compression and decompression of the insole **12**.

As another example, the upper shoe includes a compressible coupling section for mechanically coupling to the sole **10** and/or insole **12**. As the insole **12** compresses and decompresses, the compressible coupling section, which includes a compressible material, compresses and decompresses similarly. In this manner, the size and/or shape of the toe box is substantially maintained.

FIG. **90** illustrates a cross-sectional front view diagram of another embodiment of a shoe that includes a sole **10**, an insole **12**, and an upper shoe **330**. The insole **12** and/or sole **10** are/is adjustable and at least one of the sole and insole has a shape corresponding to one of the athletic positioning shapes. The upper shoe **330** may include one or more materials (e.g., leather, a synthetic material, plastic, cotton, a wicking material, etc.) to form the sides, heel, tongue, and/or toe areas of the shoe. The upper shoe **330** may further include a toe cover area of material similar to that of the sole **10**, which provides at least a portion of the toe box.

The upper shoe **330** is mechanically coupled to the sole/insole assembly such that, as the sole/insole assembly is adjusted, the upper shoe maintains a desired size and shape of the toe box. For example, the upper shoe **330** is mechanically coupled to the upper portion of the sole/insole assembly, which is within a vertically extended outersole portion of the sole, such that the upper shoe tracks the adjustment of the sole/insole assembly.

FIG. **91** illustrates a cross-sectional front view diagram of another embodiment of a sole/insole assembly that includes a sole **10**, an athletic positioning insole **340**, and an arch

support **342**. The sole may include a conventional sole design for a specific sport (or other use) or it may include one of the athletic positioning shapes discussed herein. In addition, the sole **10** may be comprised of a conventional sole material and/or one or more rigid materials. Note that the conventional sole material and the rigid materials are not mutually exclusive.

The athletic positioning insole **340** has a shape corresponding to one of the athletic positioning shapes, may be adjustable, and is comprised of one or more rigid materials, one or more recoil materials, and/or one or more compressible materials. The athletic positioning insole may be mechanically coupled to the sole or it may just rest on the sole (i.e., not glued, stitched, fused, etc.).

The arch support may be integrated into the athletic positioning insole **340** or it may be a separate piece that is mechanically coupled to the sole and/or insole or rests on the sole and/or insole. The arch support may be shaped to compensate for one or more of flat feet, plantar fasciitis, high arches, low arches, pronation, supination, etc. The arch support **342** may be of a custom design, a conventional design, etc. and/or may be comprised of one or more of a graphite material, leather, a rigid material, a compressible material, etc.

FIG. **92** illustrates a cross-sectional front view diagram of another embodiment of a sole/insole assembly that includes an athletic positioning sole **10** and an insole **12** with an integrated arch support **342**. The sole **10** includes one of the athletic positioning shapes **344** discussed herein and may be adjustable. In addition, the sole **10** may be comprised of a conventional sole material and/or one or more rigid materials. Note that the conventional sole material and the rigid materials are not mutually exclusive.

The insole **12** has a conventional insole shape or a shape corresponding to one of the athletic positioning shapes and has an arch support integrated therein. The arch support may be shaped to compensate for one or more of flat feet, plantar fasciitis, high arches, pronation, supination, etc. The insole with the integrated arch support **342** may be of a custom design, a conventional design, etc. and may be comprised of one or more of a graphite material, leather, a rigid material, a compressible material, etc.

FIGS. **93** and **94** illustrate a cross-sectional front view diagram and a cross-sectional side view diagram of another embodiment of an integrated athletic positioning sole and insole. The integrated sole **10** and insole **12** is comprised of one or more materials that provides a more compressible area towards the big toe/ball of foot area and increasingly less compressible away from the big toe/ball of foot area to facilitate an athletic position. The integrated sole and insole may be adjustable to adjust the athletic position (e.g., include removable plates, air bladders, etc.).

For example, the integrated sole and insole may include a rigid material as an outersole (e.g., a sport specific bottom) to provide a base. On top of the base, the integrated sole and insole includes one or more varying compressible materials. For example, the next layer is a single resilient material (e.g., rubber, gel, foam, synthetic material, etc.) of varying density to provide a compressible gradient. As another example, the next layer includes a plurality of materials, each having a shape to collectively provide the athletic positioning shape. In addition, at least some of the materials have a different level of compressibility to facilitate the compressible gradient.

The integrated sole and insole may further include an insole cover layer and/or an arch support cover layer. The insole cover layer may be of a compressible material to provide a more comfortable fit. The arch support may be shaped to compensate for one or more of flat feet, plantar fasciitis, high arches, pronation, supination, etc. The arch support may be of a custom design, a conventional design, etc. and may be comprised of one or more of a graphite material, leather, a rigid material, a compressible material, etc.

FIG. **95** illustrates a cross-sectional front view diagram of another embodiment of an integrated athletic positioning sole and insole. The integrated sole and insole is comprised of a flexible and resilient material that creates a chamber (which may be filled with gel, air, another liquid material, oil, water, etc), which provides a more compressible area towards the big toe/ball of foot area and increasingly less compressible away from the big toe/ball of foot area to facilitate an athletic position. The material may be one or more of rubber, a synthetic material, plastic, fiberglass, carbon fiber, etc. In addition, the integrated sole and insole may be adjustable to adjust the athletic position (e.g., include removable plates, air bladders, etc.). Further, the integrated sole and insole may include an outsole of a rigid material (e.g., a sport specific bottom).

As shown, the walls of the integrated sole and insole are thicker on the outer edge **352** of the shoe than on the inner edge of the shoe **350**. As such, the outer edge of the sole/insole is less compressible than the inner edge. Similarly, the walls of the sole/insole at big toe & ball of foot area are thinner than the walls towards the heel of the shoe. Accordingly, when a shoe that includes the present insole/sole assembly is worn, the more compressible areas on the insole/sole assembly compress more than the less compressible areas, putting the wearer in an athletic position (e.g., one or more of heel higher than toes, knees bent, more weight on big toe &/or ball-foot, more weight on inside of leg versus outside of leg, etc.).

FIG. **96** illustrates a cross-sectional front view diagram of another embodiment of an integrated athletic positioning sole and insole. The integrated sole and insole is comprised of a flexible and resilient material and includes a plurality of supporting columns and/or panels. The columns and/or panels create a plurality of chambers (which may be filled with gel, air, oil, another liquid material, water, etc). The number and/or thickness of the columns and/or panels is greater at the outer edge **362** of the shoe than on the inner edge of the shoe **360**, which provides a more compressible area towards the big toe/ball of foot area and increasingly less compressible away from the big toe/ball of foot area. The material may be one or more of rubber, a synthetic material, plastic, fiberglass, carbon fiber, etc. In addition, the integrated sole **10** and insole **12** may be adjustable to adjust the athletic position (e.g., include removable plates, air bladders, etc.). Further, the integrated sole and insole may include an outsole of a rigid material (e.g., a sport specific bottom).

As shown, the number of columns is greater at the outer edge of the shoe than at the inner edge of the shoe. As such, the outer edge **362** of the sole/insole is less compressible than the inner edge **360**. Similarly, the number of columns and/or the thickness of the columns is less at the sole/insole at big toe & ball of foot area than the number and/or thickness of columns towards the heel of the shoe. Accordingly, when a shoe that includes the present insole/sole assembly is worn, the more compressible areas on the insole/sole assembly compress more than the less compressible areas, putting the wearer in an athletic position.

FIG. **97** illustrates a cross-sectional front view diagram of another embodiment of an athletic positioning sole/insole

assembly that includes a sole **10**, an insole **12**, a rigid outer edge **362**, and padding **360**. The insole **12** has a conventional insole shape or a shape corresponding to one of the athletic positioning shapes. The insole **12** may have an arch support integrated therein, where the arch support is shaped to compensate for one or more of flat feet, plantar fasciitis, high arches, pronation, supination, etc. In addition, the insole may be comprised of one or more of a graphite material, leather, a rigid material, a compressible material, etc.

The sole **10** includes a conventional shape or a shape corresponding to one of the athletic positioning shapes. In addition, the sole may be adjustable and may be comprised of a conventional sole material and/or one or more rigid materials. Note that the conventional sole material and the rigid materials are not mutually exclusive.

The sole **10** may further include an outersole (e.g., sport specific bottom) that includes an inner supporting wall **364** and may further include the rigid outer edge **362**. The outersole may be comprised of a conventional sole material and/or of one or more rigid materials. Regardless of the material, the inner supporting wall is, at least on the inside edge by the toe, substantially perpendicular to the slope of the insole/sole assembly to minimize pinching of the big toe and/or the ball-of-foot. Similarly, the rigid outer edge **362** (or wall) is, at least on the inside edge by the little toe, substantially perpendicular to the slope of the insole/sole assembly to provide a rigid surface to push against when a lateral force is applied (i.e., the horizontal or near horizontal force component of the foot force during an athletic move) and/or to minimize a "give" of the shoe (e.g., foot sliding in the shoe, which may detract from the athletic move). Note that there may be padding on the inside of the rigid outer wall and/or on the inside of the inside supporting wall.

Alternatively, the rigid outer edge **362** may be coupled to, or integrated into, the insole **12**. In this alternative, the outersole would further include an outer supporting wall, which is outside of the rigid outer edge **362**. In this instance, both the rigid outer edge **362** and the outer supporting wall provide a rigid surface to push against for the lateral force.

FIG. **98** illustrates a cross-sectional front view diagram of another embodiment of a sole/insole assembly that includes an athletic positioning sole **10** and an insole **12**. The insole **12** has a conventional insole shape and may be comprised of a compressible material. In addition, the insole may include an arch support integrated therein, where the arch support is shaped to compensate for one or more of flat feet, plantar fasciitis, high arches, pronation, supination, etc.

The sole **10** includes a shape corresponding to one of the athletic positioning shapes. In addition, the sole may be adjustable and may be comprised of a conventional sole material and/or one or more rigid materials. Note that the conventional sole material and the rigid materials are not mutually exclusive.

FIG. **99** illustrates a cross-sectional front view diagram of another embodiment of a shoe that includes an athletic positioning sole **10**, an insole **12**, and a shoe housing **372**. The sole **10** and insole **12** are similar to the sole **10** and insole **12** of FIG. **98**. The shoe housing **372** (e.g., the shoe upper) includes a decompressible material **370** (e.g., similar material to a compressible material, but its normal state is compressed as opposed to decompressed) on the inside of the shoe housing **372**.

When the shoe is place on a foot and with minimal foot force, the compressible material insole is not substantially compressed and the decompressible material is substantially compressed. When a foot force is applied (e.g., wearer of the shoe is standing, running, etc.), the compressible insole compresses and, when the foot force is removed (e.g., foot off ground), the compressible insole decompresses. As the foot force varies from minimal force (e.g., foot off ground) to maximal force (e.g., leg on ground while running), the compression of the compressible insole varies proportionally.

The compression and/or decompression of the decompressible material during the variations of the foot force depend on how the shoe housing is anchored **374** (e.g., mechanically coupled) to the sole/insole assembly. In this figure, the shoe housing **372** is anchored **374** to the top of the compressible material; as such the shoe housing moves with the compression and decompression of the compressible insole. The decompressible material, however, stays in the substantially compressed state.

FIG. **100** illustrates the shoe housing anchored to the rigid sole **374**. In this example, the shoe housing does not move with the compression and decompression of the compressible insole. Accordingly, the decompressible material decompresses as the compressible insole compresses and the decompressible material compresses as the compressible insole decompresses. In either of the examples of FIGS. **99** and **100**, the decompressible material facilitates a snug fit of the shoe, which may reduce energy loss during an athletic move that results from a loose fitting shoe.

FIGS. **101** and **102** illustrate a cross-sectional front view diagram of another embodiment of a sole/insole assembly that includes a dynamic athletic positioning sole-insole and a sport specific bottom (e.g., an outersole). The athletic positioning sole-insole has a shape corresponding to one of the athletic positioning shapes, which is adaptable based on the force applied.

As shown in FIG. **101**, when a downward force (e.g., approximately perpendicular to the sport specific bottom **190** or slightly off perpendicular from the outer edge to the inner edge) is applied to the insole/sole assembly during a forward or backward movement (e.g., running, walking, jumping, etc. in a forward or backward direction), the angle from the outside edge of the shoe to the inside edge of shoe is of a first value (e.g., Ø1). The first value of the angle may be in the range of near zero degrees to less than 10 degrees to simulate a more conventional insole/sole assembly for forward/backward movements. In addition, the angle between the big toe/inner ball of foot area and the heel may be in the range of near zero degrees to less than 10 degrees to simulate a more conventional insole/sole assembly for forward/backward movements.

As shown in FIG. **102**, when a force (e.g., off perpendicular from the inner edge to the outer edge) is applied to the insole/sole assembly during a lateral movement (e.g., pitching, hitting, making a cut while running, etc.), the angle from the outside edge of the shoe to the inside edge of shoe is of a second value (e.g., 02). The second value of the angle may be in the range of a fraction of a degree to 10-20 degrees (or more) to provide an athletic position for lateral movements. In addition, the angle between the big toe/inner ball of foot area and the heel may be in the range of a fraction of a degree to 10-20 degrees (or more) to provide an athletic position for lateral movements.

FIG. **103** illustrates a cross-sectional front view diagram of an embodiment of the varying athletic positioning sole/insole assembly of FIGS. **101** and **102**. The sole/insole assembly includes an elastic housing **380**, a plurality of support and pressure shifting panels **382**, and a liquid material **384**. The elastic housing **380** is comprised of an elastic material such as one or more of rubber, a synthetic material, plastic, etc. In addition, the elastic housing **380**

may be more elastic at the outer edge of the sole/insole assembly (and towards the heel) and less elastic at the inner edge of the sole/insole assembly towards the big toe/inner ball of foot area.

In a no load, steady-state condition, the flaps of the panels are closed and the liquid material is approximately equally distributed in the chambers between the panels. Note that equal distribution of the liquid material (e.g., gel, water, an oil, etc.) may be volume based and/or based on substantially equal pressure applied on the panels. In this state, the sole/insole assembly has a shape corresponding to one of the athletic positioning shapes.

FIGS. **104** and **105** illustrate a side view diagram and a cross-sectional view diagram of an embodiment of a panel of the sole/insole assembly of FIG. **103**. The panel includes a plurality of larger release holes **390**, a plurality of larger release flaps **392**, a plurality of smaller release holes **394**, and a plurality of smaller flaps **396**. The panel **398** may be comprised of a semi rigid, elastic, and resilient material such as one or more of rubber, a synthetic material, plastic, etc.

The larger **392** and smaller flaps **396** are comprised of the substantially the same semi rigid, elastic, and resilient material as the panel and function to block flow of the liquid material through the corresponding release hole in one direction and enable flow of the liquid material through the corresponding release hole in the opposite direction. The size of the holes and/or the ratio between the sizes of the holes is dependent on the desired levels of flow of the liquid material in the given directions.

FIG. **106** illustrates a cross-sectional front view diagram of another embodiment of the sole/insole assembly of FIG. **103** under a force (e.g., due to a lateral movement) as shown. In this example, more force **400** is being applied at the big toe and inner ball of foot area than at the outer edge. This puts greater force on the chambers below the big toe and inner ball of foot area than in the chambers under the outer edge of the foot. Once the pressure between an inner chamber and an adjacent outer chamber exceeds a rigidity factor of the larger flaps (e.g., a measure of how much force is needed for the flap to open), the flaps open and the liquid material **384** flows through the corresponding larger holes from the inner chamber to the adjacent outer chamber.

In this load condition, the panels under the big toe and ball of foot area are compressed. Conversely, the panels under the outer edge of the sole/insole assembly are expanded. In addition, since the elastic housing **380** is more elastic at the outer edge of the sole/insole assembly than at the inner edge, the liquid material **394** expands the outer chambers **404** more readily than the inner chambers **406**. Accordingly, the angle form the outer edge to the inner edge increases with respect to the angle during the no load steady-state condition. To insure that the holes do not close during such forces, the holes may include grommets to hold their shape.

If too much pressure builds up in the outer chambers versus an adjacent inner chamber, one or more of the smaller flaps may open to allow the liquid material to flow to the adjacent inner chamber. Note that ratio between the larger holes and the smaller holes favors flow **410** of the liquid material from the inner chambers to the outer chambers. Further note that when the force is removed (e.g., return to a no load steady state), the larger flaps close and some of the smaller flaps open until the no load steady state condition is substantially achieved.

FIG. **107** illustrates a cross-sectional front view diagram of another embodiment of the sole/insole assembly of FIG. **103** under a force **400** (e.g., due to a forward or backward movement or on the outer edge of the shoe) as shown. In this example, less force **400** is being applied at the big toe and inner ball of foot area than at the outer edge. This puts less force on the chambers below the big toe and inner ball of foot area than in the chambers under the outer edge of the foot. Once the pressure between an outer chamber and an adjacent inner chamber exceeds a rigidity factor of the larger flaps (e.g., a measure of how much force is needed for the flap to open), the flaps open and the liquid material flows **410** through the corresponding smaller holes from the outer chamber to the adjacent inner chamber.

In this load condition, the panels under the big toe and ball of foot area are substantially uncompressed. Conversely, the panels under the outer edge of the sole/insole assembly are compressed. In addition, since the elastic housing **380** is more elastic at the outer edge of the sole/insole assembly than at the inner edge, the liquid material contracts the outer chambers less readily than the inner chambers. Accordingly, the angle form the outer edge to the inner edge decreases (or at least stays approximately the same) with respect to the angle during the no load steady-state condition.

If too much pressure builds up in the inner chambers versus an adjacent outer chamber, one or more of the larger flaps may open to allow the liquid material to flow to the adjacent outer chamber. Note that when the force is removed (e.g., return to a no load steady state), the smaller flaps close and some of the larger flaps open until the no load steady state condition is substantially achieved.

FIG. **108** illustrates a cross-sectional side view diagram of another embodiment of the sole/insole assembly of FIG. **103** in the no load steady state condition. From a side perspective, the sole/insole assembly includes the elastic housing **380**, a plurality of support panels **420**, the plurality of support and pressure shifting panels **382**, and the liquid material **384**. The plurality of support panels **420** is located under the heel platform and provides substantially equal support for the heel. In the heel section **21**, the panels do not include release holes or flaps, so the liquid material **384** does not flow between the chambers of the heel section.

Under the support platform for the remainder of the foot, and in the no load, steady-state condition, the flaps of the panels are closed and the liquid material **384** is approximately equally distributed in the chambers between the panels. Note that equal distribution of the liquid material **384** (e.g., gel, water, an oil, etc.) may be volume based and/or based on substantially equal pressure applied on the panels. In this state, the sole/insole assembly has a shape corresponding to one of the athletic positioning shapes.

FIG. **109** illustrates a cross-sectional side view diagram of another embodiment of the sole **10**/insole **12** assembly of FIG. **103** under a force **400** (e.g., due to a lateral movement or forward/backward movement) as shown. In this example, more force **400** is being applied at the big toe and ball of foot area than near the heel. This puts greater force on the chambers below the big toe and ball of foot area than in the chambers under the heel. Once the pressure between a forward chamber and an adjacent rearward chamber exceeds a rigidity factor of the larger flaps (e.g., a measure of how much force is needed for the flap to open), the flaps open and the liquid material **384** flows through the corresponding larger holes from the forward chamber to the adjacent rearward chamber.

In this load condition, the panels **382** under the big toe and ball of foot area are compressed. Conversely, the panels under the near heel section are expanded. In addition, since the elastic housing is more elastic at the near heel section of the sole/insole assembly than at the toe section **25**, the liquid material **384** expands the rearward chambers more readily

than the forward chambers. Accordingly, the angle form the near heel section to the toe section **25** increases with respect to the angle during the no load steady-state condition.

If too much pressure builds up in the rearward chambers versus an adjacent forward chamber, one or more of the smaller flaps may open to allow the liquid material **384** to flow to the adjacent forward chamber. Note that when the force **400** is removed (e.g., return to a no load steady state), the larger flaps close and some of the smaller flaps open until the no load steady state condition is substantially achieved.

FIG. **110** illustrates a cross-sectional top view diagram of another embodiment of the sole/insole assembly of FIG. **103**. The heel section **21** includes fixed chambers **430** that do not allow the liquid material **384** to flow between the heel section chambers. The remaining sections of the sole/insole assembly include chambers that have panels **382** that allow the liquid metal to flow between the chambers. To promote an athletic position, the panels are orientated such that the flow of the liquid material favors the direction of the arrow during a lateral movement.

FIG. **111** illustrates a cross-sectional heel view diagram of another embodiment of a varying positioning athletic positioning sole/insole assembly, which includes a sole **10**, an insole **12**, and a sport specific bottom **190**. The sole **10** may include a conventional sole design for a specific sport (or other use) or it may include one of the athletic positioning shapes. In addition, the sole may be comprised of a conventional sole material and/or one or more rigid materials. Note that the conventional sole material and the rigid materials are not mutually exclusive.

The insole **12** may have a conventional insole shape or a shape corresponding to one of the athletic positioning shapes. The insole may be adjustable and is comprised of one or more rigid materials, one or more recoil materials, and/or one or more compressible materials. The insole may be mechanically coupled to the sole or it may just rest on the sole (i.e., not glued, stitched, fused, etc.) and may further include an integrated arch support.

From the heel perspective, the sole/insole assembly further includes an inward slope from a near middle point to the inner edge, which has an angle (e.g., Ø**1**). The angle may be in the range of a fraction of a degree to about 10 degrees. When a forward or backward movement force is applied to the sole/insole assembly, the non-angled section primarily supports the heel, which remains substantially parallel to the bottom of the sole/insole assemble. When a lateral movement force is applied, the angled section at least partially supports the heel such that a greater inward angling of the foot is achieved during athletic positioning.

FIG. **112** illustrates a cross-sectional front view diagram of another embodiment of a varying positioning athletic positioning sole/insole assembly that includes an outersole, a sole-insole section, and an inner sole. The outersole may be a sport specific bottom, a casual shoe bottom, or a dress shoe bottom. The inner sole includes a rigid-flexible platform that may include a padding layer and/or an arch support layer.

The sole/insole section includes a rigid material section **142** and an easily compressible section **140**. The rigid material section is comprised of one or more rigid materials and has a shape corresponding to one of the athletic positioning shapes. The easily compressible section is comprised of one or more easily compressible materials (e.g., foam, memory foam, soft rubber, a housing filled with a liquid material, etc.) and has a mating shape to that of the rigid material section **142** such that, under a no load condition, the combination of the rigid material section and the easily compressible material section provide a conventional sole shape or a slight athletic positioning shape (e.g., angles less than a few degrees).

Under a forward or backward movement force **440**, the easily compressible material compresses slightly, such that the sole/insole assembly substantially maintains its no load shape. This condition is achieved by having more of the force **400** supported by the flat section of the rigid material section than the angled section.

FIG. **113** illustrates a cross-sectional front view diagram of another embodiment of a varying positioning athletic positioning sole/insole assembly of FIG. **112** under a lateral movement force **442**. In this diagram, the angled section of the rigid material **142** is supporting more of the force than that being supported by the flat section such that the easily compressible material **140** compresses and the inner sole tilts. The tilting of the inner sole facilitates an athletic positioning. Note that the inner sole may be somewhat flexible to allow it to conform to the athletic positioning shape.

FIG. **114** illustrates a cross-sectional front view diagram of another embodiment of a varying positioning athletic positioning sole/insole assembly that includes an outersole, a sole-insole section, and an inner sole. The outersole may be a sport specific bottom, a casual shoe bottom, or a dress shoe bottom. The inner sole includes a rigid-flexible platform that may include a padding layer and/or an arch support layer.

The sole-insole section includes a rigid material section **142** and an easily compressible section **140**. The rigid material section **142** is comprised of one or more rigid materials and has a basic shape corresponding to one of the athletic positioning shapes, but has two angles for the angled support platform. The easily compressible section **140** is comprised of one or more easily compressible materials (e.g., foam, memory foam, soft rubber, a housing filled with a liquid material, etc.) and has a mating shape to that of the rigid material section such that, under a no load condition, the combination of the rigid material section and the easily compressible material section provide a conventional sole shape or a slight athletic positioning shape (e.g., angles less than a few degrees).

Under a forward or backward movement force **440**, the easily compressible material **140** compresses slightly, such that the sole/insole assembly substantially maintains its no load shape. This condition is achieved by having more of the force supported by the flat section of the rigid material section **142** than the angled section.

FIG. **115** illustrates a cross-sectional front view diagram of another embodiment of a varying positioning athletic positioning sole/insole assembly of FIG. **114** under a lateral movement force **442**. In this diagram, the angled sections of the rigid material are supporting more of the force than the flat section such that the easily compressible material **140** compresses and the inner sole tilts. The more lateral movement force the greater the tilt of the inner sole. The tilting of the inner sole facilitates an athletic positioning.

FIGS. **116-118** illustrate a side view diagram, a front view diagram, and an isometric view diagram of an embodiment of a training shoe that includes an athletic positioning sole. The sole **10** includes an angled notch portion to facilitate achieving the desired athletic position. The angles of the angled notch portion may be greater than the angles of an insole/sole assembly to accentuate training the body to achieve a desired athletic positioning.

FIGS. **119-121** illustrate a side view diagram, a front view diagram, and a bottom view diagram of another embodiment

of a training shoe that includes an athletic positioning sole. The sole **10** includes an athletic positioning shape to facilitate achieving the desired athletic position. The angles of the athletic positioning shape may be greater than the angles of an insole/sole assembly to accentuate training the body to achieve a desired athletic positioning.

FIGS. **122** and **123** illustrate a side view diagram and a front view diagram of an embodiment of baseball spikes that include an athletic positioning spike pattern. The baseball spikes include an insole/sole assembly, an outersole, and an upper shoe (not shown). The insole/sole assembly includes a sole **10** and an insole **12**. The sole **10** may include a conventional sole design or it may include one of the athletic positioning shapes. In addition, the sole **10** may be comprised of a conventional sole material and/or one or more rigid materials. Note that the conventional sole material and the rigid materials are not mutually exclusive.

The insole **12** may have a conventional insole shape or a shape corresponding to one of the athletic positioning shapes. The insole may be adjustable and is comprised of one or more rigid materials, one or more recoil materials, and/or one or more compressible materials. The insole may be mechanically coupled to the sole or it may just rest on the sole (i.e., not glued, stitched, fused, etc.) and may further include an integrated arch support.

The spikes may have differing heights to form one of the athletic positioning shapes. Accordingly, the spikes underneath the heel are the longest and the spike or spikes underneath the big toe and/or inner ball of foot are the shortest. The other spikes are of a length between the longest and shorted depending on their position. Note that the spikes may be metal spikes, plastic cleats, changeable plastic cleats, and/or a combination thereof. Further note that the same concept applies to football cleats, soccer cleats, golf shoes, track shoes, and any other sport shoes that include cleats and/or spikes.

FIG. **124** illustrates a bottom view diagram of another embodiment of baseball spikes that include spike pattern for the drive leg of a pitcher. The spike pattern may also include the athletic positioning pattern of FIGS. **122** and **123**. The baseball spikes may also include the sole/insole assembly of FIGS. **122** and **123**.

The pitcher drive leg spike pattern includes two or three spikes aligned with the big toe and the inner ball of the foot. This row of spikes may be used to engage the pitching rubber such that multiple spikes are engaging the rubber. The pitcher drive leg spike pattern further includes two or three spikes along the outer edge of the toe and ball of foot area. These spikes may be linearly aligned, may be positioned along a line that outlines the outer edge of the toes and ball of foot, or may be positioned in another manner. A set of heel spikes may be positioned in a conventional manner. Note that the pitcher's drive leg spike pattern does not include a spike at the top of the shoe under the middle toe(s). Further note that the spikes may be metal spikes and/or plastic cleats.

FIG. **125** illustrates a bottom view diagram of another embodiment of baseball spikes that includes a spike pattern for the plant leg of a pitcher. The spike pattern may also include the athletic positioning pattern of FIGS. **122** and **123**. The baseball spikes may also include the sole/insole assembly of FIGS. **122** and **123**.

The spike pattern for the plant leg of pitcher includes a conventional heel spike configuration and a ball of foot & toe pattern to firmly plant the spikes into the pitching mound. The ball of foot & toe spike pattern may be as shown.

Note that a pair of baseball spikes may include outer-soles that allow for the spike pattern to be changed depending on whether the wearer is left-handed or right-handed. For example, a left-handed pitcher would configure the spike pattern of FIG. **124** for his/her left foot and the spike pattern of FIG. **125** for his/her right foot. Conversely, a right-handed pitcher would configure the spike pattern of FIG. **125** for his/her right foot and the spike pattern of FIG. **125** for his/her left foot.

FIGS. **126** and **127** illustrate heel view diagrams of another embodiment of baseball spikes of FIGS. **122-125** engaging a pitching rubber **460**. As shown in FIG. **126**, the row of spikes **462** under the big toe and inner ball of foot area is engaging the rubber. As shown in FIG. **127**, the outer row of spikes **462** is engaging the rubber **460**. Note that the angles of the spike pattern of FIGS. **122** and **123** may be adjusted depending on whether the inner or outer row of spikes **462** is used to engage the rubber. For instance, if the inner row of spikes are used to engage the rubber **460**, the angles of the spike pattern may be less than when the outer row of spikes **462** are used since the rubber adds to achieving the desired athletic positioning when the inner row of spikes **462** are engaging the rubber **460**.

FIG. **128** illustrates a diagram of an embodiment of a spike for baseball spikes. The baseball spikes may include a spike pattern of one or more of FIGS. **122-127** and may further include the sole/insole assembly of FIGS. **122** and **123**. In this embodiment, one or more of the spikes **462** that engage the rubber **460** includes a notch to facilitate a secure engagement with the rubber **460**. The notch may be along a major edge of the spike **462** (e.g., a rear view of the spike is shown in the present figure). Alternatively, the spike may include one or more sides (forming an L or a C shape from a top perspective) where one or more of the sides include the notch.

In another embodiment, the spike pattern of FIG. **124** further includes one or more spikes **462** that are perpendicular to the spikes at the big toe and/or ball of foot. The perpendicular spike(s) include a notch that is aligned with the inner row of spikes **462** to further improve engagement with the rubber **460**.

FIG. **129** illustrates a cross-section front view diagram of another embodiment of an insertable sole/insole assembly that may be inserted into a pair of sport specific shoes (e.g., baseball spikes). The insertable sole/insole assembly includes a sole **10**, an insole **12**, and may further include an arch support. The sole **10** may include a conventional sole design for a specific sport (or other use) or it may include one of the athletic positioning shapes discussed herein. In addition, the sole **10** may be comprised of a conventional sole material and/or one or more rigid materials. Note that the conventional sole material and the rigid materials are not mutually exclusive.

The insole **12** includes a conventional insole shape or it has a shape corresponding to one of the athletic positioning shapes. The insole **12** may be adjustable and is comprised of one or more rigid materials, one or more recoil materials, and/or one or more compressible materials. The insole **12** may be mechanically coupled to the sole **10** or it may just rest on the sole **10** (i.e., not glued, stitched, fused, etc.). The arch support may be integrated into the athletic positioning insole or it may be a separate piece that is mechanically coupled to the insole or rests on the insole. The insertable sole/insole assembly may be used in combination with one or more of the heel attachments of FIGS. **130-139** to modify a conventional pair of baseball spikes into athletic positioning baseball spikes.

FIGS. **130-132** illustrate a side view diagram and a bottom view diagram of an embodiment of an athletic positioning heel attachment for baseball spikes. The heel attachment **472** includes a height, width, and depth to raise the heel of the baseball spikes with respect to the toe of the spikes by 5-20 mm. In addition, the heel attachment **472** may include one or more notches or holes to clear one or more of the spikes on the heel section **470** of the baseball spikes. Further, the heel attachment **472** may be comprised of one or more of the rigid materials and may be mechanically coupled (e.g., glued, stitched, riveted, fused, etc.) to the heel of the baseband spikes.

FIG. **133** illustrates a bottom view diagram of another embodiment of an athletic positioning attachment for baseball spikes that attaches to the outer edge of the ball of foot and toe section of the baseball spikes. The athletic positioning attachment **480** has a shape corresponding to the non-heel section of one of the athletic positioning shapes. In addition, the athletic positioning attachment may include one or more notches or holes to clear one or more spikes of the baseball spikes. Further, the athletic positioning attachment may be comprised of one or more of the rigid materials and may be mechanically coupled (e.g., glued, stitched, riveted, fused, etc.) to the heel of the baseband spikes.

FIG. **134** illustrates a heel view diagram of another embodiment of an athletic positioning attachment for baseball spikes. In this diagram, the athletic positioning attachment **490** is attached to a pitcher's drive leg baseball spike to provide a desired athletic positioning of the drive leg.

FIG. **135** illustrates a side view diagram of another embodiment of a heel attachment **472** and an athletic positioning attachment **490** attached to one of a pair of baseball spikes. The heel **472** and athletic positioning attachments **490** may be separate attachments as previously discussed with reference to FIGS. **130-134**. Alternatively, the attachments may be a single attachment as discussed below.

FIGS. **136-138** illustrate a bottom view diagram, an inside view diagram, and an outside view diagram of an embodiment of an athletic positioning attachment for baseball spikes. The attachment **500** may have a shape corresponding to one of the athletic positioning shapes and may be comprised of one or more rigid materials. In addition, the attachment **500** may be mechanically coupled (e.g., glued, stitched, riveted, fused, etc.) to the outer-sole of the baseband spikes and may include one or more notches to provide clearance for one or more spikes.

FIG. **139** illustrates a topological view diagram of an embodiment of an athletic positioning attachment of FIGS. **136-138**. The attachment has a topology that ranges from a thickness of 1-4 mm under the ball of foot to 10-20 mm under the heel.

FIG. **140** illustrates an isometric view diagram of an embodiment of a pitching training aid that includes a platform **510**, a push-off platform that has one of the athletic positioning shapes, and a plurality of anchoring cleats **514**. In an example, the training aid has dimensions that include a height (h**1**) of 20-50 mm, a second height (h**3**) of 5-20 mm, a width of 75-125 mm, a length of 250-350 mm, and corresponding angles (Ø**2**, Ø**3**, & Ø**4**).

In use, the pitching training aid is placed in front of the rubber and secured into the pitching mound via the anchoring cleats. The pitcher places his/her drive leg shoe on the training aid **512** (e.g., on the push-off platform) such that his/her big toe and/or ball of foot is positioned at the lowest point the training aid and the heel is positioned at a higher point. This will help place the pitcher's drive leg to be in an athletic position.

FIG. **141** illustrates an isometric view diagram of another embodiment of a pitching training aid that includes one of the athletic positioning shapes, a notch for engaging the rubber (no notch shown), and a plurality of anchoring cleats **514**. In an example, the training aid has dimensions that include a height (h**1**) of 20-50 mm, a second height (h**3**) of 5-20 mm, a width of 75-125 mm, a length of 250-350 mm, and corresponding angles (Ø**2**, Ø**3**, & Ø**4**).

In use, the pitching training aid is placed such that the notch engages the front edge of the rubber. The training aid is secured the pitching mound via the anchoring cleats **514**. The pitcher places his/her drive leg shoe on the training aid **512** such that his/her big toe and/or ball of foot is positioned at the lowest point the training aid and the heel is positioned at a higher point.

FIG. **142** illustrates an isometric view diagram of an embodiment of a pitching rubber that includes a left-handed side and a right-handed side. Each side includes one of the athletic positioning shapes to facilitate achieving an athletic position for pitching. The pitching rubber may further include a ledge to ensure a proper height for engaging the athletic positioning ends of the rubber.

FIG. **143** illustrates an isometric view diagram of another embodiment of a pitching rubber that includes a left-handed middle section and a right-handed middle section. Each middle section includes one of the athletic positioning shapes to facilitate achieving an athletic position for pitching. The pitching rubber may further include a ledge to ensure a proper height for engaging the athletic positioning ends of the rubber.

FIGS. **144** and **145** illustrate a top view diagram and a cross-section front view diagram of an embodiment of a shoe that includes an athletic positioning insole/sole assembly, an upper shoe **534**, one or more tightening sections, and one or more securing mechanisms **526**. The upper shoe **534** includes a toe cover section, sides, and an Achilles heel section. The one or more tightening sections include one or more flaps (one shown), where each flap includes one or more securing tabs attached thereto. A flap **532** may be comprised of a similar material as a tongue on a conventional shoe and/or of a similar material as at least a portion of the upper shoe **534**.

The upper shoe **534** is attached to the one or more tightening sections via a hinged coupling mechanism **524** (e.g., a flexible and durable material mechanically coupling (e.g., stitched, glued, fused, stapled, riveted, etc.) the upper shoe **534** to the tightening section, a fabric hinge, a plastic and/or rubber hinge, etc.). The one or more securing mechanisms **526** (e.g., Velcro, buckles, shoe laces, hook & eyelets, clasps, etc.) include one mating element mechanically coupled to the vertical component of the outer-sole and/or to the sole/insole assembly on the inside edge of the shoe and another mating element mechanically coupled to the securing tabs **530** of the tightening section.

In use, the tightening section **532** is open to allow the wearer to easily insert his/her foot. Once the foot is placed within the shoe, the wearer pulls the tightening section **532** over the top of his/her foot. Due to the sole/insole assembly, the outer edge of the foot is higher than the inside edge (especially towards the toes and ball of foot areas) and the heel is higher than the toes and ball of foot areas. With this orientation of the foot, applying a force **400** from the outside edge to the inside edge while closing and fastening the tightening section **532** to the securing mechanism **526** provides a desired snug fit and may further promote the athletic positioning. Padding within the shoe provides added comfort.

FIG. **146** illustrates a side view diagram of an embodiment of the shoe of FIGS. **144** and **145** with the one or more tightening sections **532** (e.g., pull over top) securely fastened to the one or more securing mechanisms **326**, which are securely mounted on the vertical outer-sole section on the inside edge of the shoe. With the tightening section **532** securely fastened, it is applying a force from the outer edge of the shoe to the inner edge of the shoe, which provides the desired snug fit and promotes the athletic positioning.

FIGS. **147** and **148** illustrate side view diagrams of another embodiment of a shoe that includes an athletic positioning insole/sole assembly, an upper shoe, one or more tightening sections **532**, and one or more securing mechanisms **526**. The securing mechanism **526**(*s*) includes an anchoring mechanism **548**, a first set of hoops **560**, a second set of hoops **546**, a shoelace **544** (which are shown in FIG. **147**), and a hook section (which is shown in FIG. **148**).

The first set of hoops **550** (which may be eyelets, holes with grommets, etc.) is secured to the tightening section **532** and the second set of hoops **546** is secured to the sole or outersole and is horizontal offset from the first set of hoops. The shoelace **544** is woven through the sets of hooks and is anchored at one by the anchoring mechanism **548** (e.g., stitching, riveting, gluing, etc.) to the sole, outersole, or the toe box cover. The shoelace **544**, which may have some to no elasticity, includes a holding tab **540** and a hook **560** (or eyelet **564**) at its other end. The hook section **560** (FIG. **148**) includes a plurality of hooks **560** arranged in a pattern (e.g., linearly aligned, aligned in an upward angle, aligned in a downward angle, equally spaced, unequally spaced, etc.) and includes a cover with a Velcro **568** (or other) securing tab.

In use, the wearer provides slack to the shoelace **544** such that the tightening section **532** can be opened enough to enable the wearer to insert his/her foot into the shoe. In this position, the first set of hoops **546** is vertically offset from the second set of hoops **550**. Once the foot is in the shoe, the wearer pulls the shoelace **544** via the holding tab **542**, which causes the first set of hoops **546** to be pulled downward towards the second set of hoops **550**. This motion causes the tightening section **532** to tighten around the foot. Once the wearer has achieved the desired snug fit, he/she couples the eyelet **564** of the shoelace **544** on one of the hooks **560** (FIG. **148**) to maintain the present fit of the shoe. The wearer then secures the hook cover **562** over the hooks **560**. To remove the shoe, the wearer performs the process in reverse.

FIG. **149** illustrates a side view diagram of another embodiment of shoe that includes an athletic positioning insole/sole assembly, an upper shoe, one or more tightening sections **532**, and one or more securing mechanisms **526**. The securing mechanism(s) **526** includes anchoring mechanisms **548**, a first set of hoops **576**, a second set of hoops **578**, a third set of hoops **580**, a first shoelace **582**, a second shoelace **584**, a first hook section **570**, and a second hook section **572**.

The first set of hoops **576** (which may be eyelets, holes with grommets, etc.) is secured to the tightening section **532**; the second set of hoops **578** is free floating; and the third set of hoops **580** is secured to the sole or outersole. The first shoelace **582** is woven through the first **570** and second sets of hooks **572** and is anchored at one by the first anchoring mechanism **548** to the sole, outersole, or the toe box cover. The second shoelace **584** is woven through the second **578** and third sets of hooks **580** and is anchored at one by the second anchoring mechanism **548** to the sole, outersole, or the toe box cover.

Each of the shoelaces, which may have some to no elasticity, includes a holding tab and a hook **564** (or eyelet) at its other end. Each of the hook sections **560** includes a plurality of hooks arranged in a pattern (e.g., linearly aligned, aligned in an upward angle, aligned in a downward angle, equally spaced, unequally spaced, etc.). A shoe may further include a cover that covers the hook sections.

In use, the wearer provides slack to the shoelaces such that the tightening section **532** can be opened enough to enable the wearer to insert his/her foot into the shoe. In this position, the first set of hoops **576** is vertically offset from the second set of hoops, **578** which are vertically offset from the third set of hoops **580**. Once the foot is in the shoe, the wearer pulls the second shoelace **584** via the holding tab, which causes the second set of hoops **578** to be pulled downward towards the third set of hoops **580**. The wearer then pulls (or pulls contemporaneously) the first shoe via its holding tab, which causes the first set of hoops **576** to be pulled downward toward the second **578** and third set of hoops **580**. These motions cause the tightening section to tighten around the foot. Once the wearer has achieved the desired snug fit, he/she couples the eyelets of the shoelaces on hooks **570** of the respective hook sections to maintain the present fit of the shoe. The wearer then secures the hook cover **562** over the hook sections. To remove the shoe, the wearer performs the process in reverse.

FIG. **150** illustrates an isometric view diagram of another embodiment of shoe that includes an athletic positioning insole/sole assembly, an upper shoe **590**, one or more tightening sections **532**, and one or more securing mechanisms **526**. The securing mechanism **526** may be any one or a combination of the securing mechanisms previously discussed. The tightening section **532** is shown as being an integral part of the upper shoe **590** to include one or more flaps **532** that pull over the top of the shoe towards the instep. The upper shoe **590** is further shown to include a tongue **592**.

In use, the wearer unsecures the pull over flap (s) **532** from the securing mechanisms **526** or loosens the pull over flaps **532** from the securing mechanisms **526** depending on the type of the securing mechanism. In this condition, the wearer inserts his/her foot into the shoe and positions the tongue **592**, if needed. Once the foot is inserted into the shoe, the wearer pulls the pull over flap(s) **532** and secures it/them using the securing mechanisms **526**.

A shoe (sport, dress, casual, etc.) may be implemented using one or more of the concepts presented with reference to the preceding figures. For instance, a shoe may include a combination of concepts discussed with reference to different figures even if the discussion of one figure did not specifically mentioned that the concept(s) it is presenting can be combined with one or more concepts discussed with reference to another figure. In addition, one or more of the concepts presented with reference to one or more of the figures may be used in a standalone athletic positioning insole, a standalone athletic positioning attachment, a standalone training aid, and/or in a combination thereof. Further, the concepts presented in the preceding figures may be diagramed for left footwear (e.g., sole, insole, bottom, sock, shoe, etc.) or right footwear. Regardless of which footed footwear is illustrated, the concepts apply equally to left footed footwear and to right footed footwear. Still further, a sole/insole assembly (i.e., a sole and an insole that individually or collectively have an athletic positioning shape) may be incorporated into any type of shoe along with other shoe parts (e.g., an outersole (e.g., a sport specific bottom), a upper shoe, a toe cover, etc.).

As may be used herein, the terms "substantially" and "approximately" provides an industry-accepted tolerance for its corresponding term and/or relativity between items. Such an industry-accepted tolerance ranges from less than one percent to fifty percent and corresponds to, but is not limited to, component values, integrated circuit process variations, temperature variations, rise and fall times, and/or thermal noise. Such relativity between items ranges from a difference of a few percent to magnitude differences. As may also be used herein, the term(s) "operably coupled to", "coupled to", and/or "coupling" includes direct coupling between items and/or indirect coupling between items via an intervening item (e.g., an item includes, but is not limited to, a component, an element, a circuit, and/or a module) where, for indirect coupling, the intervening item does not modify the information of a signal but may adjust its current level, voltage level, and/or power level. As may further be used herein, inferred coupling (i.e., where one element is coupled to another element by inference) includes direct and indirect coupling between two items in the same manner as "coupled to". As may even further be used herein, the term "operable to" or "operably coupled to" indicates that an item includes one or more of power connections, input(s), output(s), etc., to perform, when activated, one or more its corresponding functions and may further include inferred coupling to one or more other items. As may still further be used herein, the term "associated with", includes direct and/or indirect coupling of separate items and/or one item being embedded within another item. As may be used herein, the term "compares favorably", indicates that a comparison between two or more items, signals, etc., provides a desired relationship. For example, when the desired relationship is that signal 1 has a greater magnitude than signal 2, a favorable comparison may be achieved when the magnitude of signal 1 is greater than that of signal 2 or when the magnitude of signal 2 is less than that of signal 1.

As may also be used herein, the terms "processing module", "processing circuit", and/or "processing unit" may be a single processing device or a plurality of processing devices. Such a processing device may be a microprocessor, micro-controller, digital signal processor, microcomputer, central processing unit, field programmable gate array, programmable logic device, state machine, logic circuitry, analog circuitry, digital circuitry, and/or any device that manipulates signals (analog and/or digital) based on hard coding of the circuitry and/or operational instructions. The processing module, module, processing circuit, and/or processing unit may be, or further include, memory and/or an integrated memory element, which may be a single memory device, a plurality of memory devices, and/or embedded circuitry of another processing module, module, processing circuit, and/or processing unit. Such a memory device may be a read-only memory, random access memory, volatile memory, non-volatile memory, static memory, dynamic memory, flash memory, cache memory, and/or any device that stores digital information. Note that if the processing module, module, processing circuit, and/or processing unit includes more than one processing device, the processing devices may be centrally located (e.g., directly coupled together via a wired and/or wireless bus structure) or may be distributedly located (e.g., cloud computing via indirect coupling via a local area network and/or a wide area network). Further note that if the processing module, module, processing circuit, and/or processing unit implements one or more of its functions via a state machine, analog circuitry, digital circuitry, and/or logic circuitry, the memory and/or memory element storing the corresponding operational instructions may be embedded within, or external to, the circuitry comprising the state machine, analog circuitry, digital circuitry, and/or logic circuitry. Still further note that, the memory element may store, and the processing module, module, processing circuit, and/or processing unit executes, hard coded and/or operational instructions corresponding to at least some of the steps and/or functions illustrated in one or more of the Figures. Such a memory device or memory element can be included in an article of manufacture.

The present invention has been described above with the aid of method steps illustrating the performance of specified functions and relationships thereof. The boundaries and sequence of these functional building blocks and method steps have been arbitrarily defined herein for convenience of description. Alternate boundaries and sequences can be defined so long as the specified functions and relationships are appropriately performed. Any such alternate boundaries or sequences are thus within the scope and spirit of the claimed invention. Further, the boundaries of these functional building blocks have been arbitrarily defined for convenience of description. Alternate boundaries could be defined as long as the certain significant functions are appropriately performed. Similarly, flow diagram blocks may also have been arbitrarily defined herein to illustrate certain significant functionality. To the extent used, the flow diagram block boundaries and sequence could have been defined otherwise and still perform the certain significant functionality. Such alternate definitions of both functional building blocks and flow diagram blocks and sequences are thus within the scope and spirit of the claimed invention. One of average skill in the art will also recognize that the functional building blocks, and other illustrative blocks, modules and components herein, can be implemented as illustrated or by discrete components, application specific integrated circuits, processors executing appropriate software and the like or any combination thereof.

The present invention may have also been described, at least in part, in terms of one or more embodiments. An embodiment of the present invention is used herein to illustrate the present invention, an aspect thereof, a feature thereof, a concept thereof, and/or an example thereof. A physical embodiment of an apparatus, an article of manufacture, a machine, and/or of a process that embodies the present invention may include one or more of the aspects, features, concepts, examples, etc. described with reference to one or more of the embodiments discussed herein. Further, from figure to figure, the embodiments may incorporate the same or similarly named functions, steps, modules, etc. that may use the same or different reference numbers and, as such, the functions, steps, modules, etc. may be the same or similar functions, steps, modules, etc. or different ones.

Unless specifically stated to the contra, signals to, from, and/or between elements in a figure of any of the figures presented herein may be analog or digital, continuous time or discrete time, and single-ended or differential. For instance, if a signal path is shown as a single-ended path, it also represents a differential signal path. Similarly, if a signal path is shown as a differential path, it also represents a single-ended signal path. While one or more particular architectures are described herein, other architectures can likewise be implemented that use one or more data buses not expressly shown, direct connectivity between elements, and/or indirect coupling between other elements as recognized by one of average skill in the art.

The term "module" is used in the description of the various embodiments of the present invention. A module includes a processing module, a functional block, hardware,

and/or software stored on memory for performing one or more functions as may be described herein. Note that, if the module is implemented via hardware, the hardware may operate independently and/or in conjunction software and/or firmware. As used herein, a module may contain one or more sub-modules, each of which may be one or more modules.

While particular combinations of various functions and features of the present invention have been expressly described herein, other combinations of these features and functions are likewise possible. The present invention is not limited by the particular examples disclosed herein and expressly incorporates these other combinations.

What is claimed is:

1. A pair of shoes comprises:

a left foot shoe including:

a left upper shoe portion; and

a left sole coupled to the left upper shoe portion, wherein a foot platform of the left sole provides an athletic positioning of a left big toe area of the left shoe at a lower position than a left heel area of the left shoe and at a lower position than an outer small toe area of the left shoe, wherein, from an inner edge to an outer edge of the left shoe, the left heel area has substantially no slope, and wherein, from the inner edge to the outer edge of the left shoe at a cross section at a ball of ball, a bottom of the left sole is substantially linear; and

a right foot shoe including:

a right upper shoe portion; and

a right sole coupled to the right upper shoe portion, wherein a foot platform of the right sole provides an athletic positioning of a right big toe area of the right shoe at a lower position than a right heel area of the right shoe and at a lower position than an outer small toe area of the right shoe and wherein, from an inner edge to an outer edge of the right shoe, the right heel area has substantially no slope, and wherein, from the inner edge to the outer edge of the right shoe at a cross section at a ball of ball, a bottom of the right sole is substantially linear.

2. The pair of shoes of claim **1**, wherein the foot platform of the left sole comprises:

a heel section that, from the inner edge to the outer edge of the left shoe, has substantially no slope;

a toe section that provides the left big toe area of the left shoe at the lower position than the left heel area of the left shoe and at the lower position than the outer small toe area of the left shoe; and

a mid-foot section having a shape to transition from the heel section to the toe section.

3. The pair of shoes of claim **2**, wherein the heel section of the foot platform of the left sole comprises:

a heel platform that includes a surface having substantially no slope from the inner edge to the outer edge of the left shoe and for a length of the surface, wherein, when the left shoe is worn, the heel platform supports a left heel of a wearer.

4. The pair of shoes of claim **2**, wherein the toe section of the foot platform of the left sole comprises:

a stabilizing cup in the left big toe area, wherein, when the left shoe is worn, the stabilizing cup functions to, at least one of, stabilize and position a left big toe of a wearer in a particular location in the left big toe area.

5. The pair of shoes of claim **2**, wherein the toe section of the foot platform of the left sole comprises:

a stabilizing cup in the left big toe area, wherein, when the left shoe is worn, the stabilizing cup functions to, at least one of, stabilize and position a left ball-of-foot of a wearer in a particular location in the left big toe area.

6. The pair of shoes of claim **1**, wherein the foot platform of the left sole comprises:

a specific bottom that includes one of:

a sport specific tread pattern;

a spike pattern;

a sliding coupling pattern; and

a cleat pattern.

7. The pair of shoes of claim **1**, wherein the foot platform of the right sole comprises:

a heel section that, from the inner edge to the outer edge of the right shoe, has substantially no slope;

a toe section that provides the right big toe area of the right shoe at the lower position than the left heel area of the right shoe and at the lower position than the outer small toe edge area of the right shoe; and

a mid-foot section having a shape to transition from the heel section to the toe section.

8. The pair of shoes of claim **7**, wherein the heel section of the foot platform of the right sole comprises:

a heel platform that includes a surface having substantially no slope from the inner edge to the outer edge of the right shoe and for a length of the surface, wherein, when the right shoe is worn, the heel platform supports a right heel of a wearer.

9. The pair of shoes of claim **7**, wherein the toe section of the foot platform of the right sole comprises:

a stabilizing cup in the right big toe area, wherein, when the right shoe is worn, the stabilizing cup functions to, at least one of, stabilize and position a right big toe of a wearer in a particular location in the right big toe area.

10. The pair of shoes of claim **7**, wherein the toe section of the foot platform of the right sole comprises:

a stabilizing cup in the right big toe area, wherein, when the right shoe is worn, the stabilizing cup functions to, at least one of, stabilize and position a right ball-of-foot of a wearer in a particular location in the right big toe area.

11. The pair of shoes of claim **1**, wherein the foot platform of the right sole comprises:

a specific bottom that includes one of:

a sport specific tread pattern;

a spike pattern;

a sliding coupling pattern; and

a cleat pattern.

* * * * *