ATHALONZ

Patent Owner's Presentation

IPR2024-00636, IPR2024-00637, IPR2024-00638

U.S. Patent Nos. 10,674,786; 11,013,291; 11,064,760

Under Armour, Inc. v. Athalonz LLC

June 17, 2025

"Slope Patents" – IPR Proceedings

- **IPR2024-00636**: U.S. Patent No. 10,674,786 (786)
- **IPR2024-00637**: U.S. Patent No. 11,013,291 (291)
- **IPR2024-00638**: U.S. Patent No. 11,064,760 (760)

Slope Patents – Primary Prior Art References

- **Kim (EX1005)**: U.S. Patent Pub. No. 2004/0040181
- **Dufour (EX1006)**: U.S. Patent No. 4,754,561
- **Rubin (EX1007)**: U.S. Patent No. 3,789,523

OVERVIEW OF THE PATENTS

’786 Patent

(12) **United States Patent**
Adair et al.

(10) **Patent No.: US 10,674,786 B2**
(45) **Date of Patent: Jun. 9, 2020**

(54) **ATHLETIC POSITIONING APPARATUS INCLUDING A HEEL PLATFORM AND APPLICATIONS THEREOF**

(75) Inventors: **Michael R. Adair**, Woodruff, SC (US); **Timothy W. Markison**, Mesa, AZ (US)

(73) Assignee: **ATHALONZ, LLC**, Mesa, AZ (US)

(*) Notice: Subject to any disclaimer, the term of this patent is extended or adjusted under 35 U.S.C. 154(b) by 257 days.

(21) Appl. No.: **13/355,801**

(22) Filed: **Jan. 23, 2012**

(65) **Prior Publication Data**

US 2012/0227284 A1 Sep. 13, 2012

Related U.S. Application Data

(60) Provisional application No. 61/450,485, filed on Mar. 8, 2011.

(51) **Int. Cl.**
A43B 7/14 (2006.01)
A43B 7/24 (2006.01)
A43B 13/14 (2006.01)

(52) **U.S. Cl.**
CPC ***A43B 7/14*** (2013.01); ***A43B 7/141*** (2013.01); ***A43B 7/142*** (2013.01); ***A43B 7/143*** (2013.01); ***A43B 7/144*** (2013.01); ***A43B 7/1445*** (2013.01); ***A43B 7/24*** (2013.01); ***A43B 13/14*** (2013.01); ***A43B 13/143*** (2013.01); ***A43B 13/148*** (2013.01)

(58) **Field of Classification Search**
CPC A43B 7/142; A43B 7/144; A43B 13/38; A43B 13/145; A43B 5/00; A43B 13/12; A43B 7/00; A43B 7/14; A43B 3/00; A61F 5/0195; A61F 5/14
USPC .... 36/44, 43, 25 R, 110, 103, 132, 142, 144
See application file for complete search history.

(56) **References Cited**

U.S. PATENT DOCUMENTS

4,620,376	A	11/1986	Talarico, II	
4,685,227	A *	8/1987	Simmons	36/127
6,976,322	B1	12/2005	Walker	
7,464,428	B2 *	12/2008	Norton	12/146 B
7,487,604	B2	2/2009	Perron, Jr.	
7,581,336	B2 *	9/2009	Segalin	36/43
7,793,437	B2 *	9/2010	Chapman	A43B 7/141 36/142
2002/0005000	A1 *	1/2002	Choi	36/144
2002/0139011	A1 *	10/2002	Kerrigan	36/144
2004/0025376	A1 *	2/2004	Grisoni et al.	36/44
2006/0000114	A1 *	1/2006	Love	36/43
2006/0053664	A1 *	3/2006	Tager	36/144

(Continued)

OTHER PUBLICATIONS

Pribut: [downloaded from Internet Feb. 26, 2011; http://www.drpribut.com/sports/shoes.html]; 7 pgs.

(Continued)

Primary Examiner — Megan E Lynch
(74) *Attorney, Agent, or Firm* — Garlick & Markison; Timothy W. Markison

(57) **ABSTRACT**

An apparatus includes a heel platform section, a mid-foot section juxtaposed to the heel platform section, and a toe section juxtaposed to the mid-foot section. The mid-foot section and toe section collectively have a geometric shape having a first slope of a polarity along an inner edge of the apparatus from the toe section to the mid-foot section and a second slope of the polarity along the inner edge of the apparatus to the outer edge of the apparatus at the toe section.

9 Claims, 92 Drawing Sheets

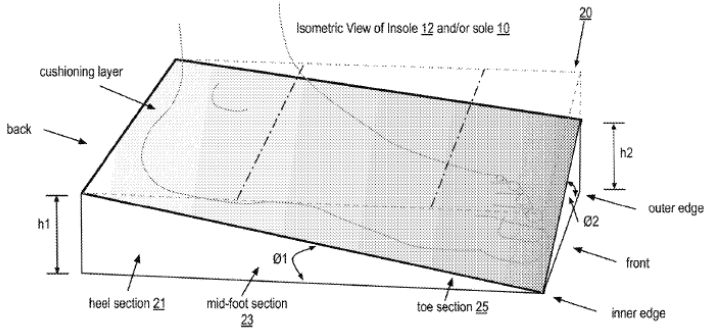

IPR2024-00636

Title: Athletic Positioning Apparatus Including a Heel Platform and Applications Thereof

Assignee: Athalonz, LLC

Priority Date: March 8, 2011

Petitioned Claims: 1-8

IPR2024-00636: EX1001

’786 Patent: Claim 1

An apparatus comprises:

a heel platform section that has a uniform height from an outer edge to an inner edge of the apparatus at the rear edge of the apparatus, wherein the uniform height establishes a reference slope from the outer edge to the inner edge, the reference slope substantially parallel to a bottom surface of the apparatus;

a mid-foot section juxtaposed to the heel platform section; and

a toe section juxtaposed to the mid-foot section, wherein the mid-foot section and the toe section form an angled support platform that has a first slope along the inner edge of the apparatus from a front edge of the apparatus to the heel platform section, a second slope along the front edge of the apparatus from the inner edge to the outer edge of the apparatus, and a third slope along the outer edge of the apparatus from the front edge of the apparatus to the heel platform section, the first slope, second slope, and the third slope each greater than the reference slope, wherein the toe section is lower than the heel platform section as a result of the first, second, and third slopes.

’786 Patent: Claim 1

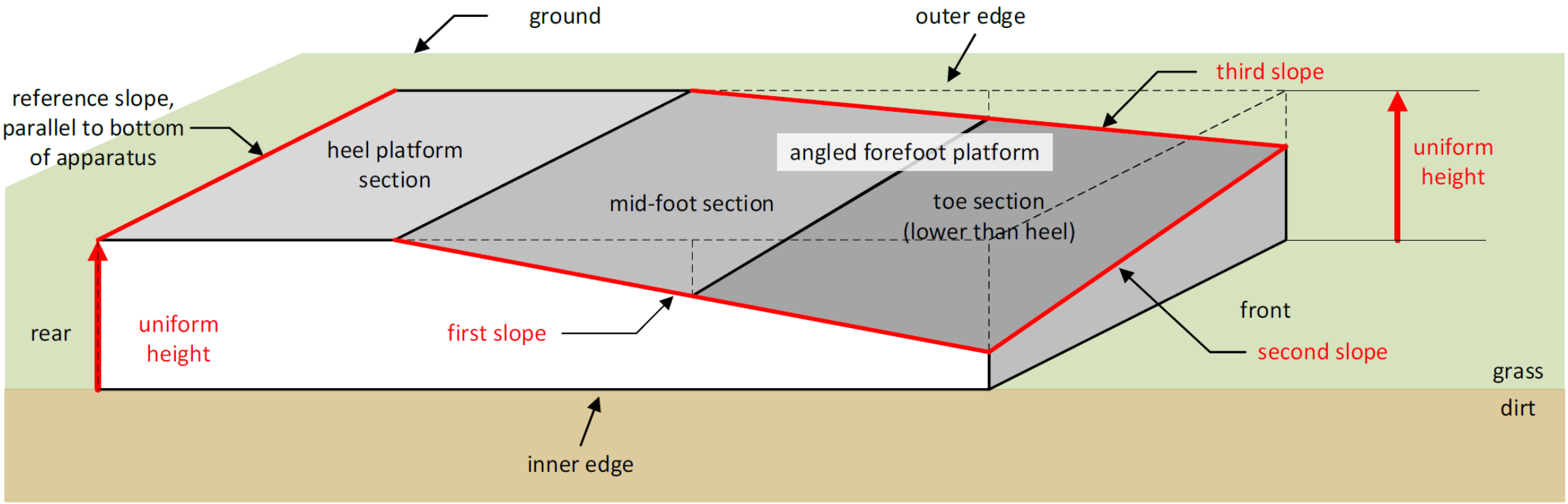

IPR2024-00636: Paper 12 at 7; EX2008 ¶72

’786 Patent: Claim 5

A shoe comprises:

an upper shoe section; and

a sole coupled to the upper shoe section, wherein the sole includes:

a specific bottom; and

an athletic positioning sole section having:

a heel platform section that has a uniform height from an outer edge to an inner edge of the athletic positioning sole section at a rear edge of the athletic positioning sole section, wherein the uniform height establishes a reference slope from the outer edge to the inner edge, the reference slope substantially parallel to a bottom surface of the sole;

a mid-foot section; and

a toe section, wherein the mid-foot section and the toe section form an angled support platform that has a first slope along the inner edge of the athletic positioning sole section from a front edge of the athletic positioning sole section to the heel platform section, a second slope along the front edge of the athletic positioning sole section from the inner edge to the outer edge of the athletic positioning sole section, and a third slope along the outer edge of the athletic positioning sole section from the front edge of the athletic positioning sole section to the heel platform section, the first slope, second slope, and the third slope each greater than the reference slope.

’786 Patent: Claim 5

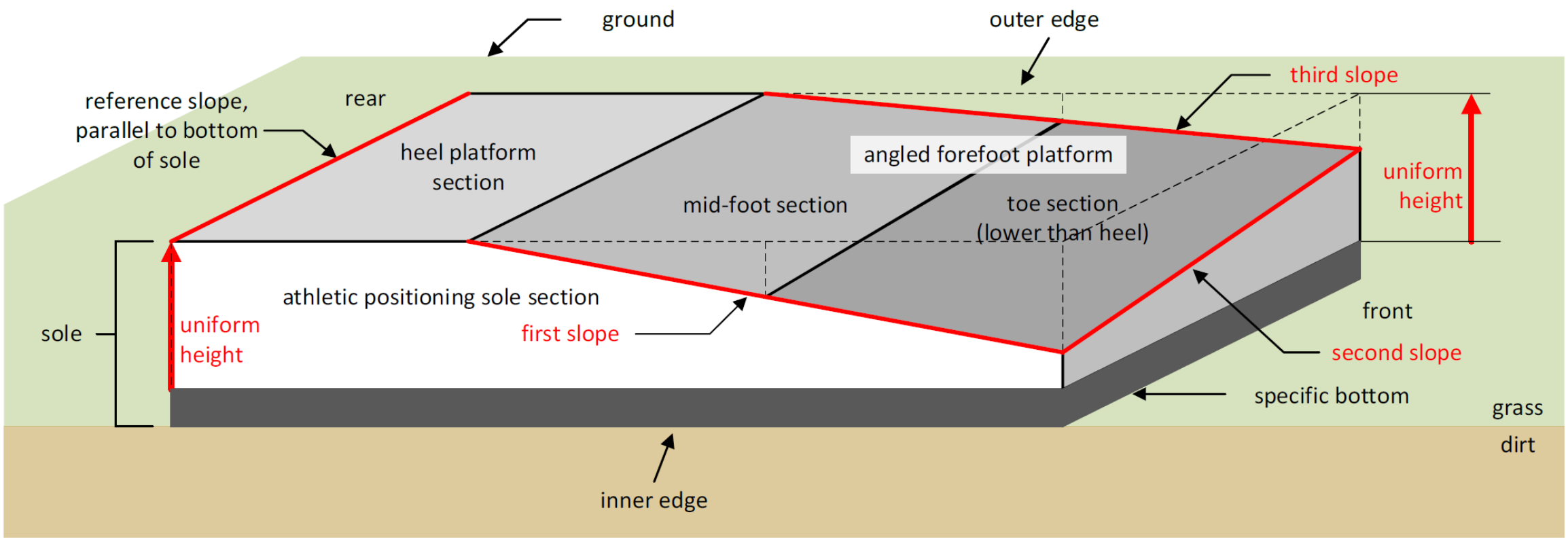

IPR2024-00636: Paper 12 at 7; EX2008 ¶72

’291 Patent

(12) **United States Patent**
Adair et al.

(10) **Patent No.: US 11,013,291 B2**
(45) **Date of Patent: *May 25, 2021**

(54) **ATHLETIC POSITIONING APPARATUS AND APPLICATIONS THEREOF**

(71) Applicant: **Athalonz, LLC**, Mesa, AZ (US)

(72) Inventors: **Michael R. Adair**, Woodruff, SC (US); **Timothy W. Markison**, Mesa, AZ (US)

(73) Assignee: **Athalonz, LLC**, Mesa, AZ (US)

(*) Notice: Subject to any disclaimer, the term of this patent is extended or adjusted under 35 U.S.C. 154(b) by 0 days.

This patent is subject to a terminal disclaimer.

(21) Appl. No.: **16/397,605**

(22) Filed: **Apr. 29, 2019**

(65) **Prior Publication Data**

US 2019/0246735 A1 Aug. 15, 2019

Related U.S. Application Data

(63) Continuation of application No. 14/563,135, filed on Dec. 8, 2014, now Pat. No. 10,271,611, which is a continuation of application No. 13/355,778, filed on Jan. 23, 2012, now Pat. No. 8,938,893.

(60) Provisional application No. 61/450,485, filed on Mar. 8, 2011.

(51) **Int. Cl.**
A43B 7/14 (2006.01)
A43B 13/14 (2006.01)
A43B 7/24 (2006.01)

(52) **U.S. Cl.**
CPC ***A43B 7/14*** (2013.01); ***A43B 7/141*** (2013.01); ***A43B 7/142*** (2013.01); ***A43B 7/143*** (2013.01); ***A43B 7/144*** (2013.01); ***A43B 7/1445*** (2013.01); ***A43B 7/24*** (2013.01); ***A43B 13/14*** (2013.01); ***A43B 13/143*** (2013.01); ***A43B 13/148*** (2013.01)

(58) **Field of Classification Search**
CPC A43B 7/14; A43B 7/141; A43B 7/142; A43B 7/143; A43B 7/144; A43B 7/1445; A43B 7/1465; A43B 7/24; A43B 11/00; A43B 13/148; A43B 13/189; A43B 13/26; A43B 5/00; A43B 13/143; A43B 13/14
USPC ..... 36/142–144, 114, 25 R
See application file for complete search history.

(56) **References Cited**

U.S. PATENT DOCUMENTS

1,477,825	A	*	12/1923	Heitler	A43B 7/142 36/162
2,616,190	A	*	11/1952	Darby	A43B 7/142 36/144
2,909,854	A	*	10/1959	Edelstein	A43B 7/1425 36/140
4,620,376	A	*	11/1986	Talarico, II	A43B 7/14 36/103
4,685,227	A	*	8/1987	Simmons	A43B 17/02 36/127
4,862,605	A	*	9/1989	Gardner	A43B 13/38 36/43

(Continued)

Primary Examiner — Marie D Bays
(74) *Attorney, Agent, or Firm* — Garlick & Markison; Timothy W. Markison

(57) **ABSTRACT**

An apparatus includes a heel section, a mid-foot section, and a toe section. The heel section, the mid-foot section, and the toe section collectively have a geometric shape having a first slope of a polarity along an inner edge of the apparatus from the toe section to the heel section and a second slope of the polarity along the inner edge of the apparatus to an outer edge of the apparatus at the toe section.

8 Claims, 92 Drawing Sheets

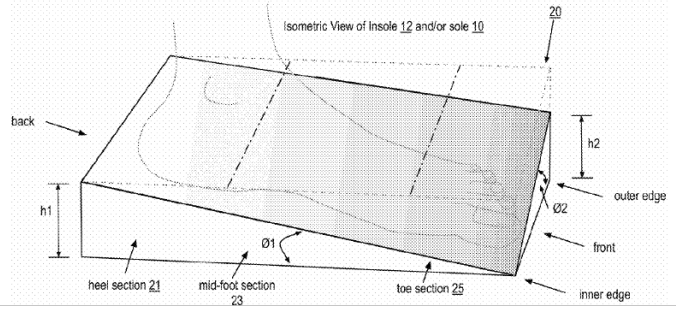

IPR2024-00637

Title: Athletic Positioning Apparatus and Applications Thereof

Assignee: Athalonz, LLC

Priority Date: March 8, 2011

Petitioned Claims: 1-5

IPR2024-00637: EX1001

’291 Patent: Claim 1

A shoe comprises:

an upper section;

a midsole coupled to the upper section;

an insole positioned proximal to the midsole and within the upper section; and

a bottom outsole coupled to the midsole, wherein a combination of the midsole, the insole, and the bottom outsole form an athletic positioning shape, wherein the athletic positioning shape has: a first height at an inside edge and at an outside edge of the shoe along a heel section of the shoe,

a second height on the outside edge of the shoe at a toe section of the shoe,

a third height on the inside edge of the shoe at the toe section of the shoe, and

the first height being greater than the second height and the second height being greater than the third height, wherein a first slope is formed by the first height and the second height, wherein a second sloped is formed by the first height and the third height, and

wherein a third slope is formed by the second height and the third height.

’291 Patent: Claim 1

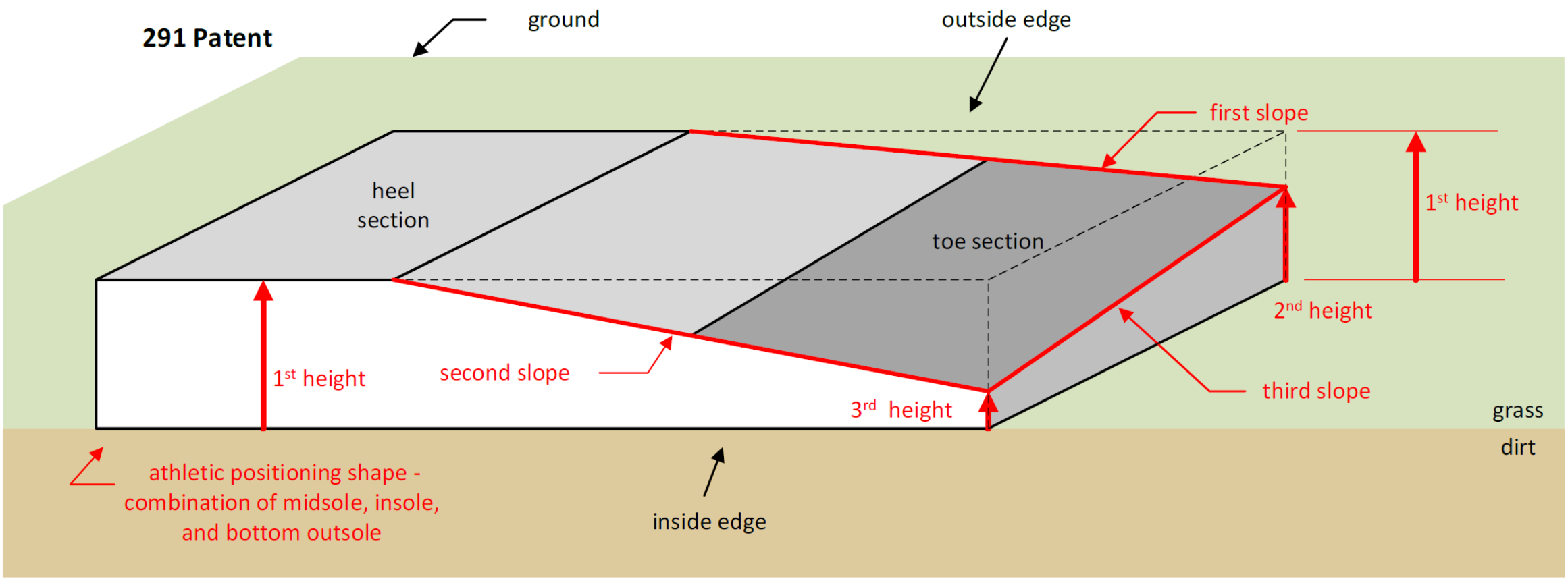

IPR2024-00637: Paper 12 at 6; EX2008 ¶72

’760 Patent

(12) **United States Patent**
Adair et al.

(10) **Patent No.: US 11,064,760 B2**
(45) **Date of Patent: *Jul. 20, 2021**

(54) **ADJUSTABLE ATHLETIC POSITIONING APPARATUS AND APPLICATIONS THEREOF**

(71) Applicant: **Athalonz, LLC**, Mesa, AZ (US)

(72) Inventors: **Michael R. Adair**, Woodruff, SC (US); **Timothy W. Markison**, Mesa, AZ (US)

(73) Assignee: **Athalonz, LLC**, Mesa, AZ (US)

(*) Notice: Subject to any disclaimer, the term of this patent is extended or adjusted under 35 U.S.C. 154(b) by 0 days.

This patent is subject to a terminal disclaimer.

(21) Appl. No.: **16/152,538**

(22) Filed: **Oct. 5, 2018**

(65) **Prior Publication Data**

US 2019/0029360 A1 Jan. 31, 2019

Related U.S. Application Data

(63) Continuation of application No. 14/159,860, filed on Jan. 21, 2014, now Pat. No. 10,092,061, which is a continuation of application No. 13/867,406, filed on Apr. 22, 2013, now Pat. No. 8,631,592, which is a continuation of application No. 13/355,778, filed on Jan. 23, 2012, now Pat. No. 8,938,893.

(60) Provisional application No. 61/450,485, filed on Mar. 8, 2011.

(51) **Int. Cl.**
A43B 7/24 (2006.01)
A43B 7/14 (2006.01)
A43B 13/14 (2006.01)

(52) **U.S. Cl.**
CPC ***A43B 7/14*** (2013.01); ***A43B 7/141*** (2013.01); ***A43B 7/142*** (2013.01); ***A43B 7/143*** (2013.01); ***A43B 7/144*** (2013.01); ***A43B 7/1445*** (2013.01); ***A43B 7/24*** (2013.01); ***A43B 13/14*** (2013.01); ***A43B 13/143*** (2013.01); ***A43B 13/148*** (2013.01)

(58) **Field of Classification Search**
CPC ... A43B 13/143; A43B 13/145; A43B 13/146; A43B 7/24
USPC 36/142–144
See application file for complete search history.

(56) **References Cited**

U.S. PATENT DOCUMENTS

4,620,376	A	11/1986	Talarico, II
4,642,911	A	2/1987	Talarico, II
4,979,318	A	12/1990	Cohen
5,345,701	A	9/1994	Smith
6,604,301	B1	8/2003	Manoli, II et al.
6,725,578	B2	4/2004	Kerrigan
7,581,336	B2	9/2009	Segalin
7,712,231	B2	5/2010	Umezawa et al.
8,127,467	B2	3/2012	Koyama
8,387,278	B2	3/2013	Rees
8,631,592	B2	1/2014	Adair et al.

(Continued)

Primary Examiner — Marie D Bays
(74) *Attorney, Agent, or Firm* — Garlick & Markison; Timothy W. Markison

(57) **ABSTRACT**

A pair of shoes that includes a left foot shoe and a right foot shoe. Each of the shoes include an upper shoe portion and a sole coupled to the upper shoe portion. The sole provides an athletic positioning of a left big toe area of the left shoe at a lower position than a left heel area of the left shoe and at a lower position than an outer small toe area of the left shoe and wherein, from an inner edge to an outer edge of the left shoe, the left heel area has substantially no slope.

11 Claims, 92 Drawing Sheets

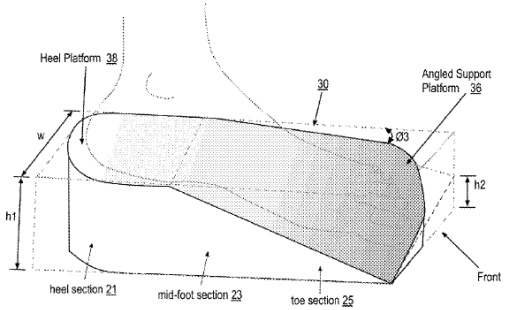

IPR2024-00638

Title: Adjustable Athletic Positioning Apparatus and Applications Thereof

Assignee: Athalonz, LLC

Priority Date: March 8, 2011

Petitioned Claims: 1-11

IPR2024-00638: EX1001

’760 Patent: Claim 1

A pair of shoes comprises:

a left foot shoe including:

a left upper shoe portion; and

a left sole coupled to the left upper shoe portion, wherein a foot platform of the left sole provides an athletic positioning of a left big toe area of the left shoe at a lower position than a left heel area of the left shoe and at a lower position than an outer small toe area of the left shoe, wherein, from an inner edge to an outer edge of the left shoe, the left heel area has substantially no slope, and wherein, from the inner edge to the outer edge of the left shoe at a cross section at a ball of ball, a bottom of the left sole is substantially linear; and

a right foot shoe including:

a right upper shoe portion; and

a right sole coupled to the right upper shoe portion, wherein a foot platform of the right sole provides an athletic positioning of a right big toe area of the right shoe at a lower position than a right heel area of the right shoe and at a lower position than an outer small toe area of the right shoe and wherein, from an inner edge to an outer edge of the right shoe, the right heel area has substantially no slope, and wherein, from the inner edge to the outer edge of the right shoe at a cross section at a ball of ball, a bottom of the right sole is substantially linear.

’760 Patent: Claim 1

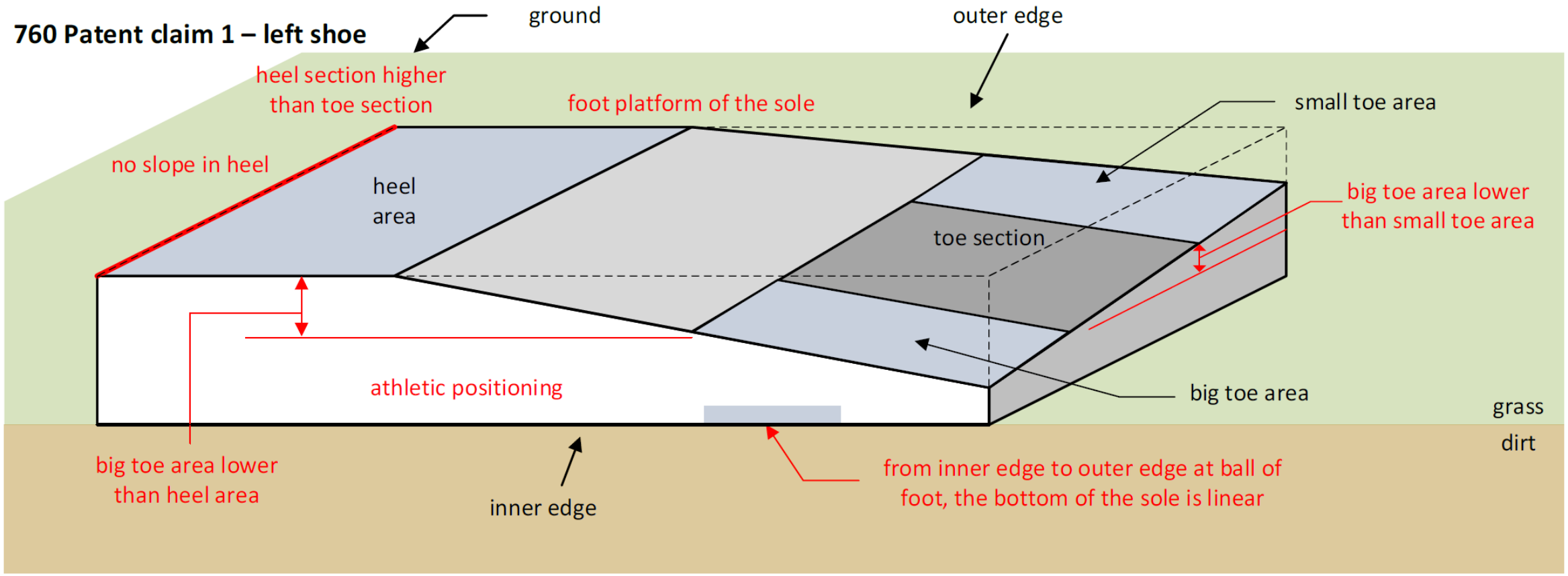

IPR2024-00638: Paper 12 at 6; EX2008 ¶72

’760 Patent: Claim 1

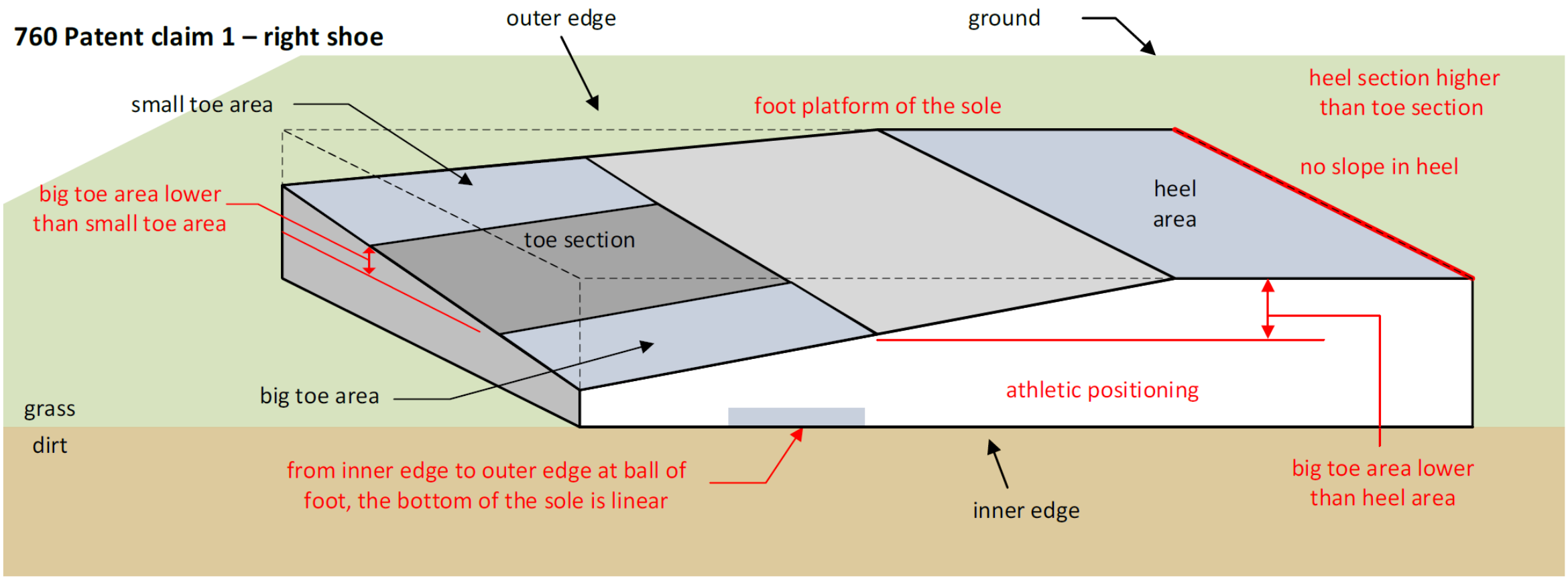

IPR2024-00638: Paper 12 at 6; EX2008 ¶72

OVERVIEW OF KIM

Kim: Overview

(19) **United States**
(12) **Patent Application Publication**
Kim

(10) **Pub. No.: US 2004/0040181 A1**
(43) **Pub. Date: Mar. 4, 2004**

(54) **GOLF SHOE**

(76) Inventor: **Jinho Kim**, Keyang-ku (KR)

Correspondence Address:
BACON & THOMAS, PLLC
625 SLATERS LANE
FOURTH FLOOR
ALEXANDRIA, VA 22314

(21) Appl. No.: **10/629,560**

(22) Filed: **Jul. 30, 2003**

(30) **Foreign Application Priority Data**

Sep. 4, 2002	(KR)	2002-26474
Nov. 6, 2002	(KR)	2002-68348
Apr. 17, 2003	(KR)	2003-11866

Publication Classification

(51) **Int. Cl.**[7] **A43B 5/00**
(52) **U.S. Cl.** **36/127**; 36/144

(57) **ABSTRACT**

Disclosed is a pair of golf shoes, each comprising an outsole provided with a plurality of spikes protruded from a lower surface of the outsole, in which the lower surface of the outsole is inclined from an outer edge of the outsole to an inner edge of the outsole so that the spikes at the inner edge of the outsole have a height larger than that of the spikes at the outer edge of the outsole, and the spikes respectively have heights so that an upper surface of the outsole is substantially parallel with a ground. The golf shoes allow golfer's feet to be stably mounted on the surface of a green, thereby assisting a golfer in taking a stable position during address and swing motions.

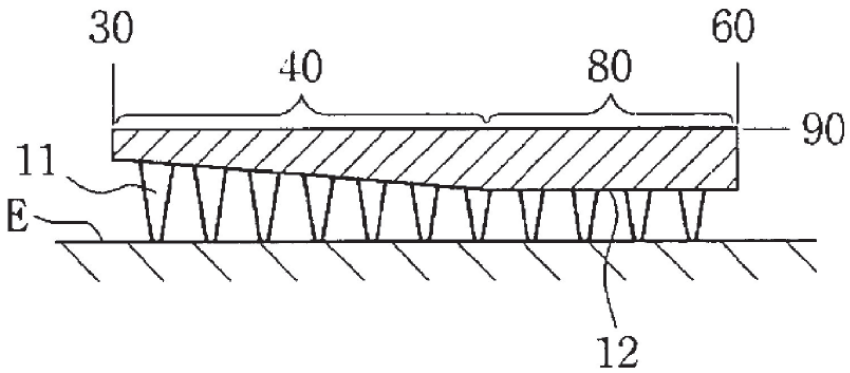

IPR2024-00636: EX1005
IPR2024-00637: EX1005
IPR2024-00638: EX1005

Kim: Overview

(57) **ABSTRACT**

Disclosed is a pair of golf shoes, each comprising an outsole provided with a plurality of spikes protruded from a lower surface of the outsole, in which the lower surface of the outsole is inclined from an outer edge of the outsole to an inner edge of the outsole so that the spikes at the inner edge of the outsole have a height larger than that of the spikes at the outer edge of the outsole, and the spikes respectively have heights so that an upper surface of the outsole is substantially parallel with a ground. The golf shoes allow golfer's feet to be stably mounted on the surface of a green, thereby assisting a golfer in taking a stable position during address and swing motions.

IPR2024-00636: EX1005, Abstract; Paper 12, 9-10
IPR2024-00637: EX1005, Abstract; Paper 12, 9-10
IPR2024-00638: EX1005, Abstract; Paper 12, 9-10

Kim: Overview

FIG. 1

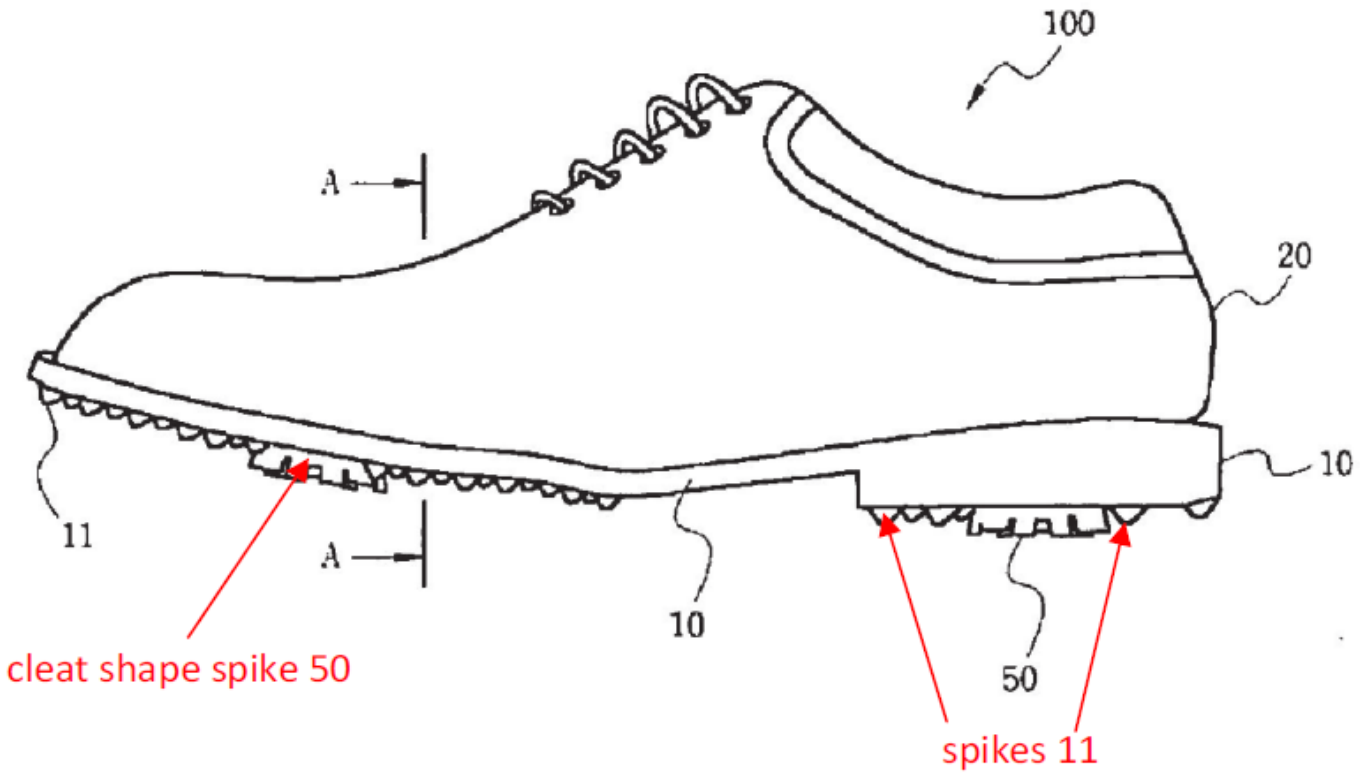

IPR2024-00636: EX1005, Fig. 1; Paper 12, 9-10
IPR2024-00637: EX1005, Fig. 1; Paper 12, 8-9
IPR2024-00638: EX1005, Fig. 1; Paper 12, 9-10

Kim: Overview

[0030] A plurality of spikes **11** are protruded from the lower surface **12** of the outsole **10** so that the golf shoe **100** is firmly gripped on the ground. The spikes **11** are integrally formed with the outsole **10**. As shown in **FIGS. 1 and 2**, a plurality of cleat-shaped spikes **50** are also protruded from the lower surface **12** of the outsole **10**. The cleat-shaped spikes **50** may be integrally formed with the outsole **10**, or detachably attached to the outsole **10** using bolts, etc.

[0031] Hereinafter, the term "spikes" disclosed in the description and the accompanying claims include the spikes **11** integrally formed with the outsole **10**, and the cleat-shaped spikes **50** integrally formed with the outsole **10** or detachably attached to the outsole **10**.

IPR2024-00636: EX1005 [0030]-[0031]; Paper 12, 9-10
IPR2024-00637: EX1005 [0030]-[0031]; Paper 12, 9-10
IPR2024-00638: EX1005 [0030]-[0031]; Paper 12, 9-10

Kim: Overview

FIG. 3b

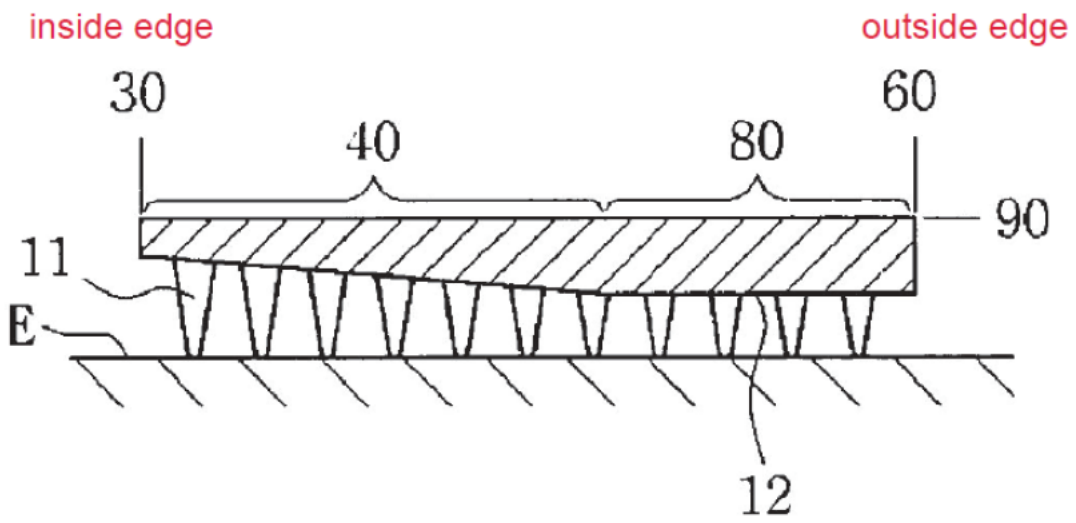

IPR2024-00636: EX1005, Fig. 3b; Paper 12, 10-11; EX2008 ¶99
IPR2024-00637: EX1005, Fig. 3b; Paper 12, 10-11; EX2008 ¶99
IPR2024-00638: EX1005, Fig. 3b; Paper 12, 10-11; EX2008 ¶99

Kim: Overview

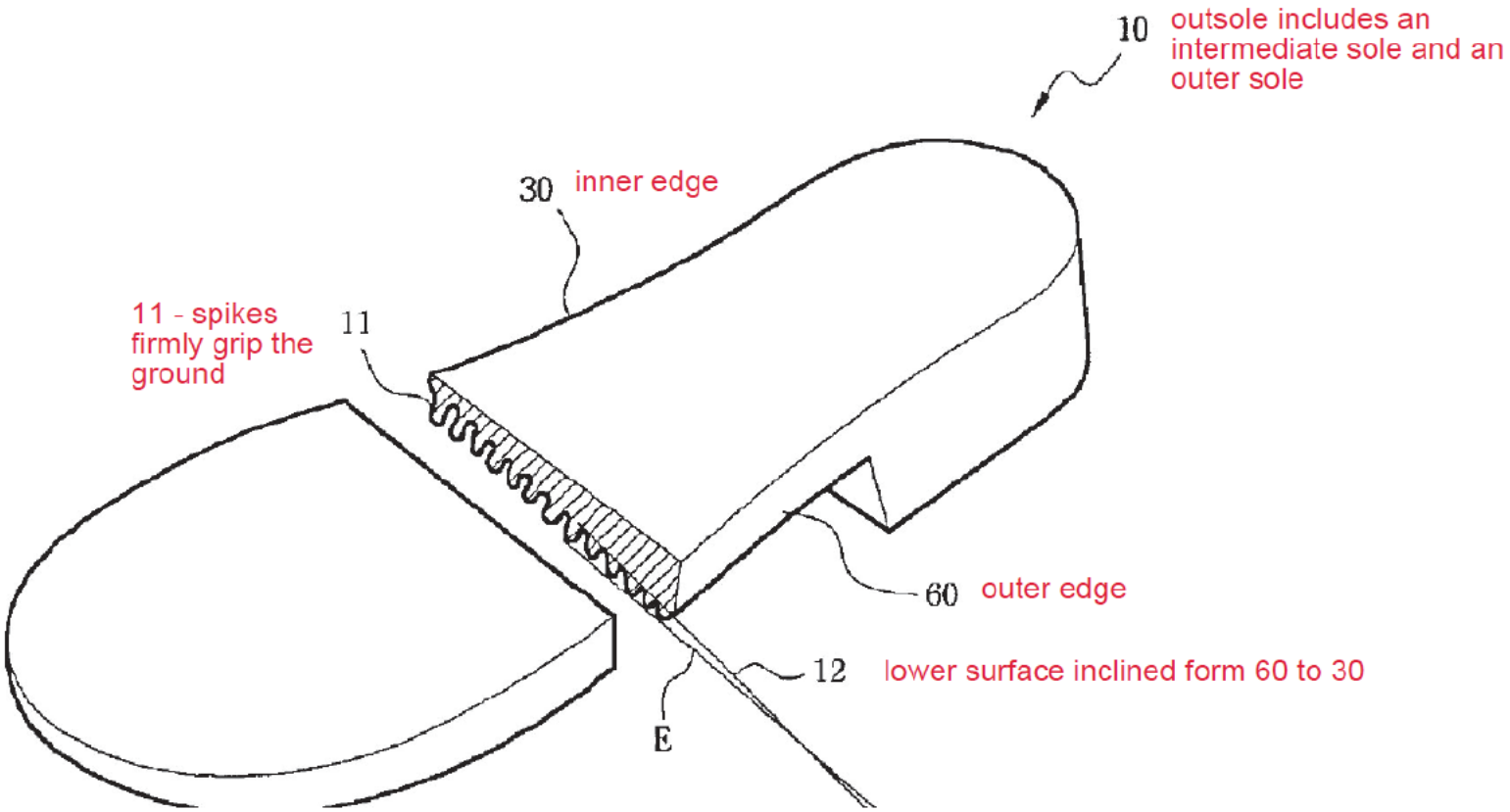

IPR2024-00636: EX1005, Fig. 2; Paper 12, 10-11; EX2008 ¶99
IPR2024-00637: EX1005, Fig. 2; Paper 12, 10-11; EX2008 ¶99
IPR2024-00638: EX1005, Fig. 2; Paper 12, 10-11; EX2008 ¶99

Kim: Hard Surface

FIG. 5a

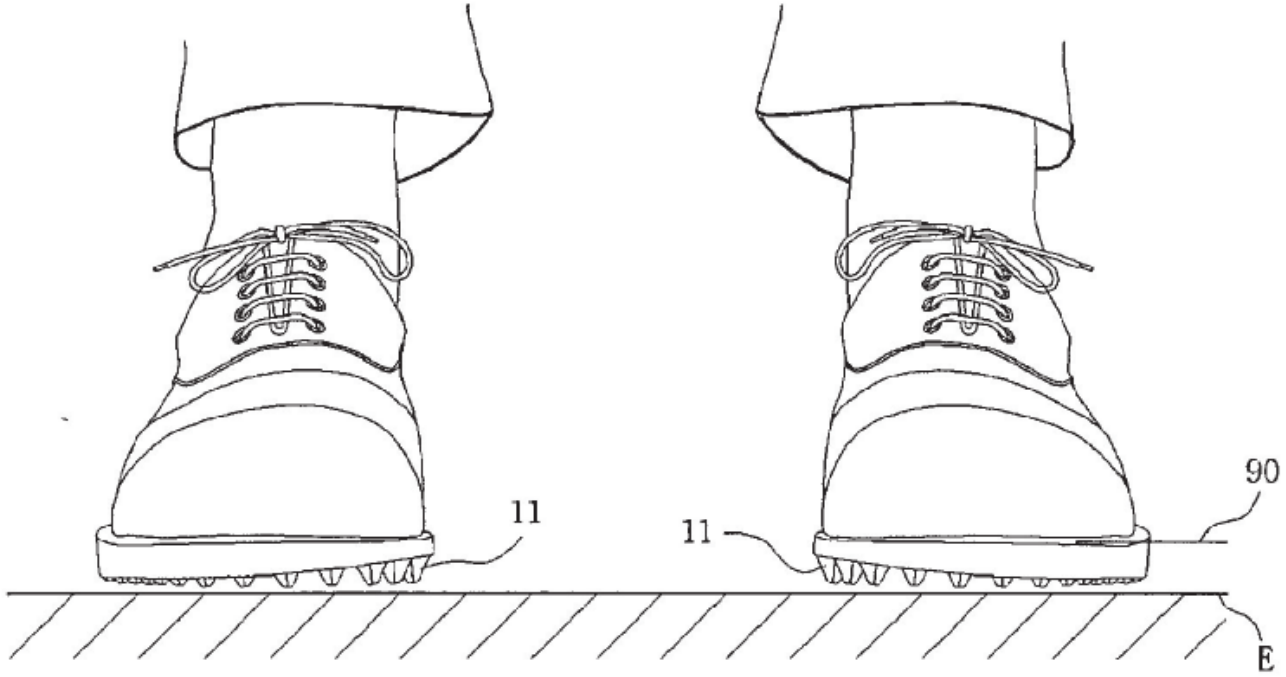

IPR2024-00636: EX1005, Fig. 5a; Paper 12, 13; EX2008 ¶¶99-111
IPR2024-00637: EX1005, Fig. 5a; Paper 12, 13; EX2008 ¶¶99-111
IPR2024-00638: EX1005, Fig. 5a; Paper 12, 13; EX2008 ¶¶99-111

Kim: Hard Surface

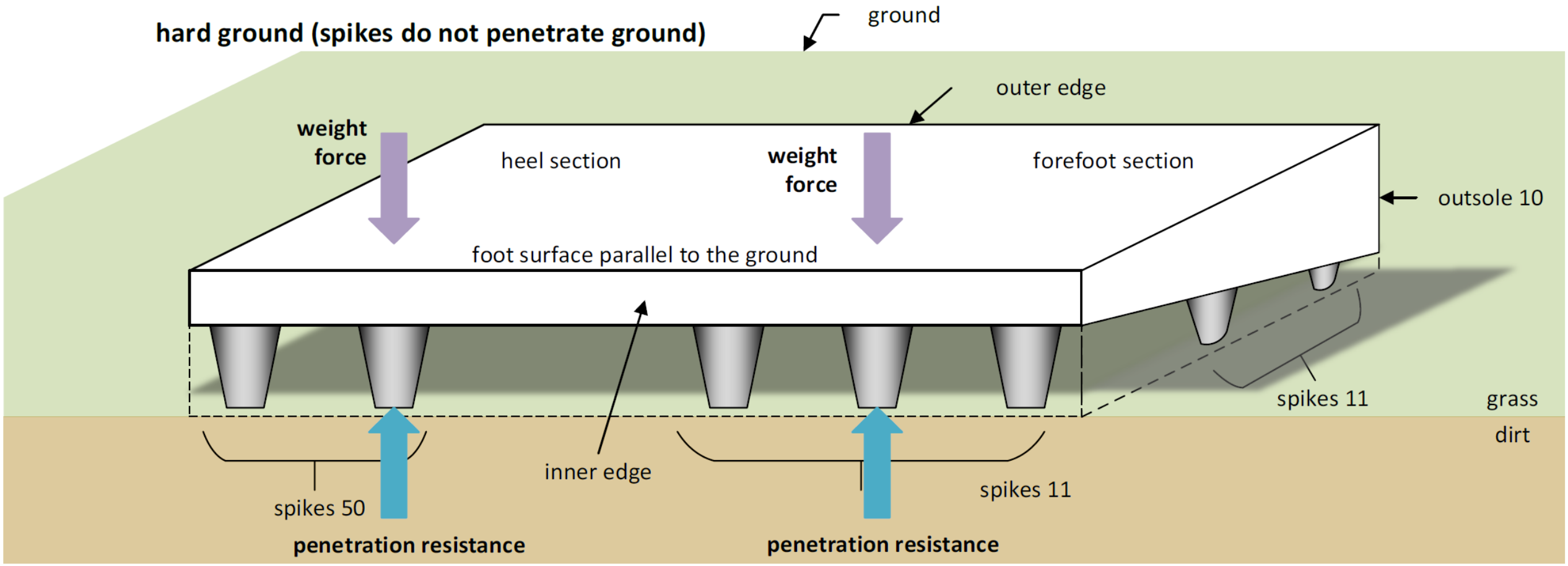

IPR2024-00636: EX1005, Fig. 5a; Paper 12, 12-13; EX2008 ¶110
IPR2024-00637: EX1005, Fig. 5a; Paper 12, 12-13; EX2008 ¶110
IPR2024-00638: EX1005, Fig. 5a; Paper 12, 12-13; EX2008 ¶110

Kim: Foot Parallel to the Ground

- Abstract: “the spikes respectively have heights so that an upper surface of the outsole is substantially parallel with a ground”
- [0014]: “a plurality of spikes protrude[] from a lower surface of the outsole, wherein: bottoms of the spikes (an upper surface of the outsole) are substantially parallel with the ground”
- [0015]: “the bottoms of the spikes are substantially parallel with the ground, thereby allowing a golfer in the golf shoes to concentrating his/her weight during the address and swing phases on the inner edges of soles of feet and assisting the golfer in performing a stable swing motion”
- [0033]: “the bottoms of the spikes . . . are substantially parallel with the ground E”
- [0045]: “the bottoms of spikes protruding from the outsoles of the golf shoes are parallel with the ground”

IPR2024-00636: EX1005, Abstract, [0014]; [0015]; [0033]; [0045]; Paper 12, 36

Kim: Soft Surface

FIG. 5b

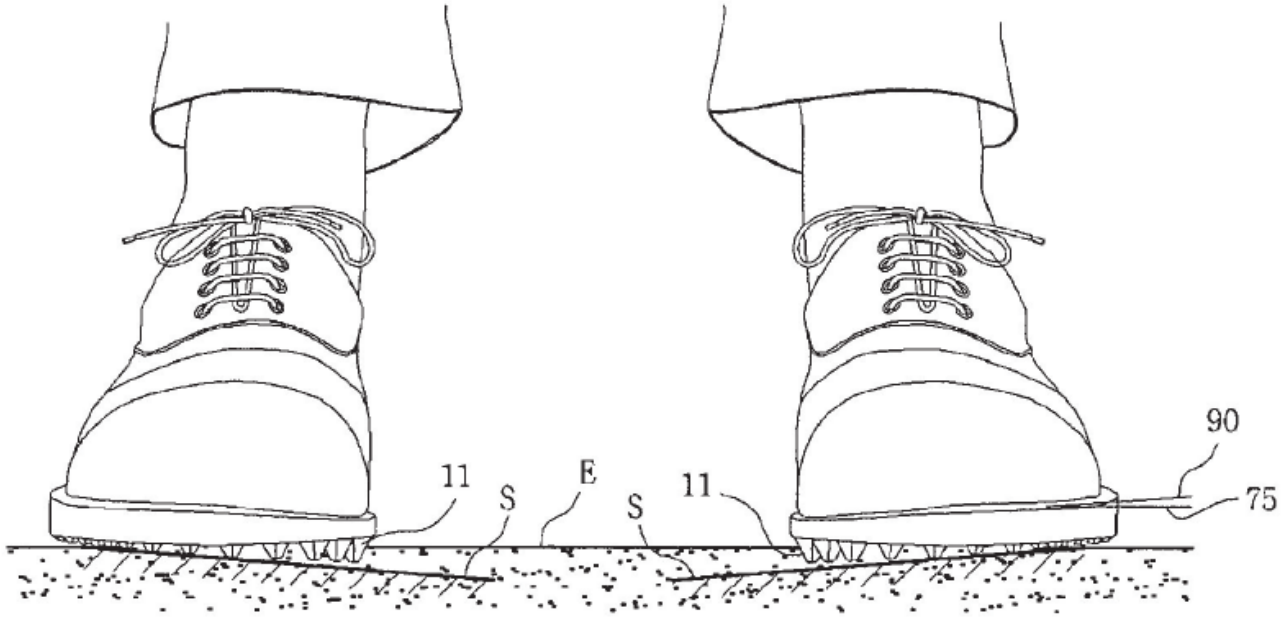

IPR2024-00636: EX1005, Fig. 5b; Paper 12, 14-16; EX2008 ¶¶112-116
IPR2024-00637: EX1005, Fig. 5b; Paper 12, 14-16; EX2008 ¶¶112-116
IPR2024-00638: EX1005, Fig. 5b; Paper 12, 14-16; EX2008 ¶¶112-116

Kim: Soft Surface

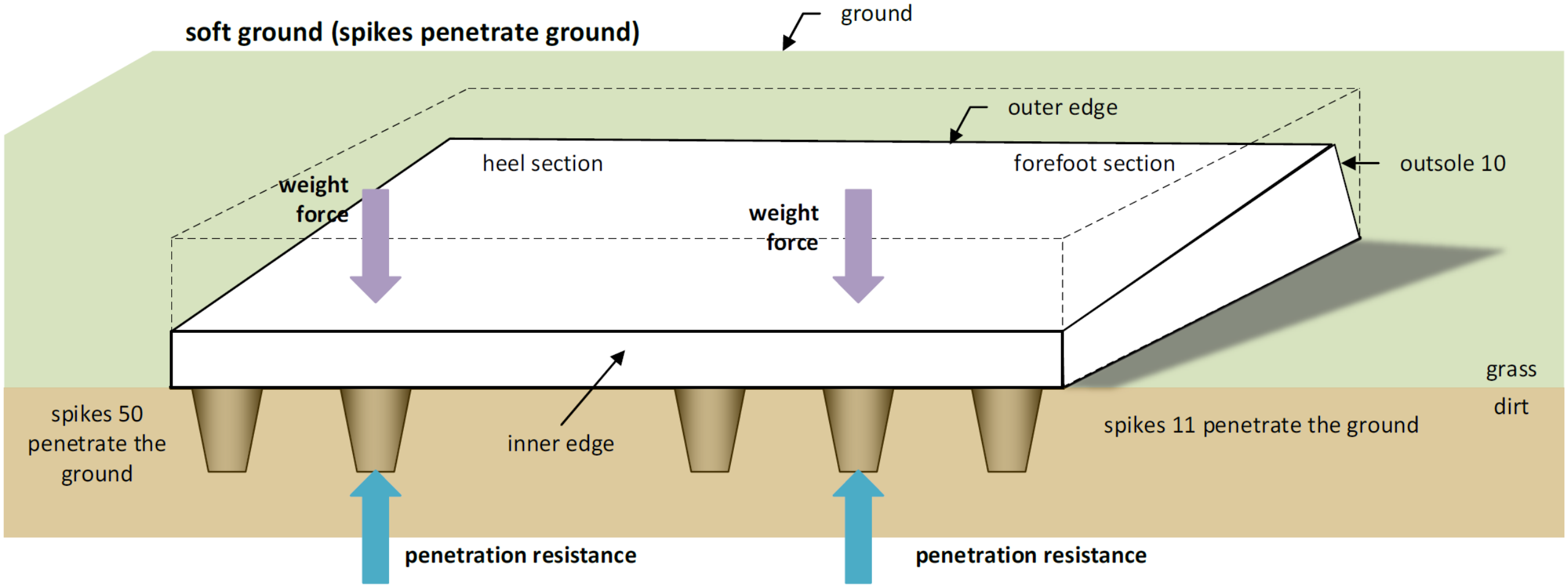

IPR2024-00636: EX1005, Fig. 5b; Paper 12, 15-16; EX2008 ¶112
IPR2024-00637: EX1005, Fig. 5b; Paper 12, 14-15; EX2008 ¶112
IPR2024-00638: EX1005, Fig. 5b; Paper 12, 14-15; EX2008 ¶112

Kim: Entire Foot Tilts

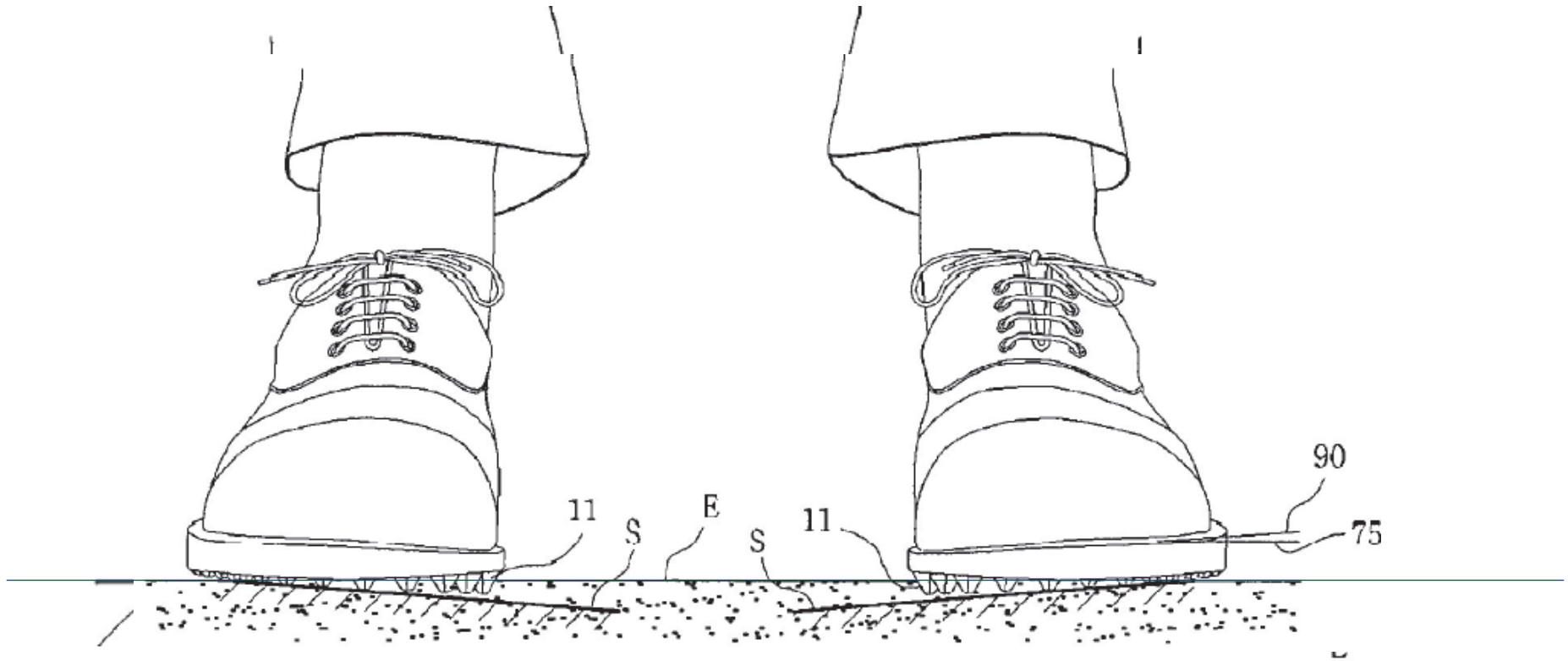

IPR2024-00636: EX1005, Fig. 5b; Paper 12, 16; EX2008 ¶¶113-115
IPR2024-00637: EX1005, Fig. 5b; Paper 12, 15; EX2008 ¶¶113-115
IPR2024-00638: EX1005, Fig. 5b; Paper 12, 15; EX2008 ¶¶113-115

Kim: Entire Foot Tilts

FIG. 5a
FIG. 5b

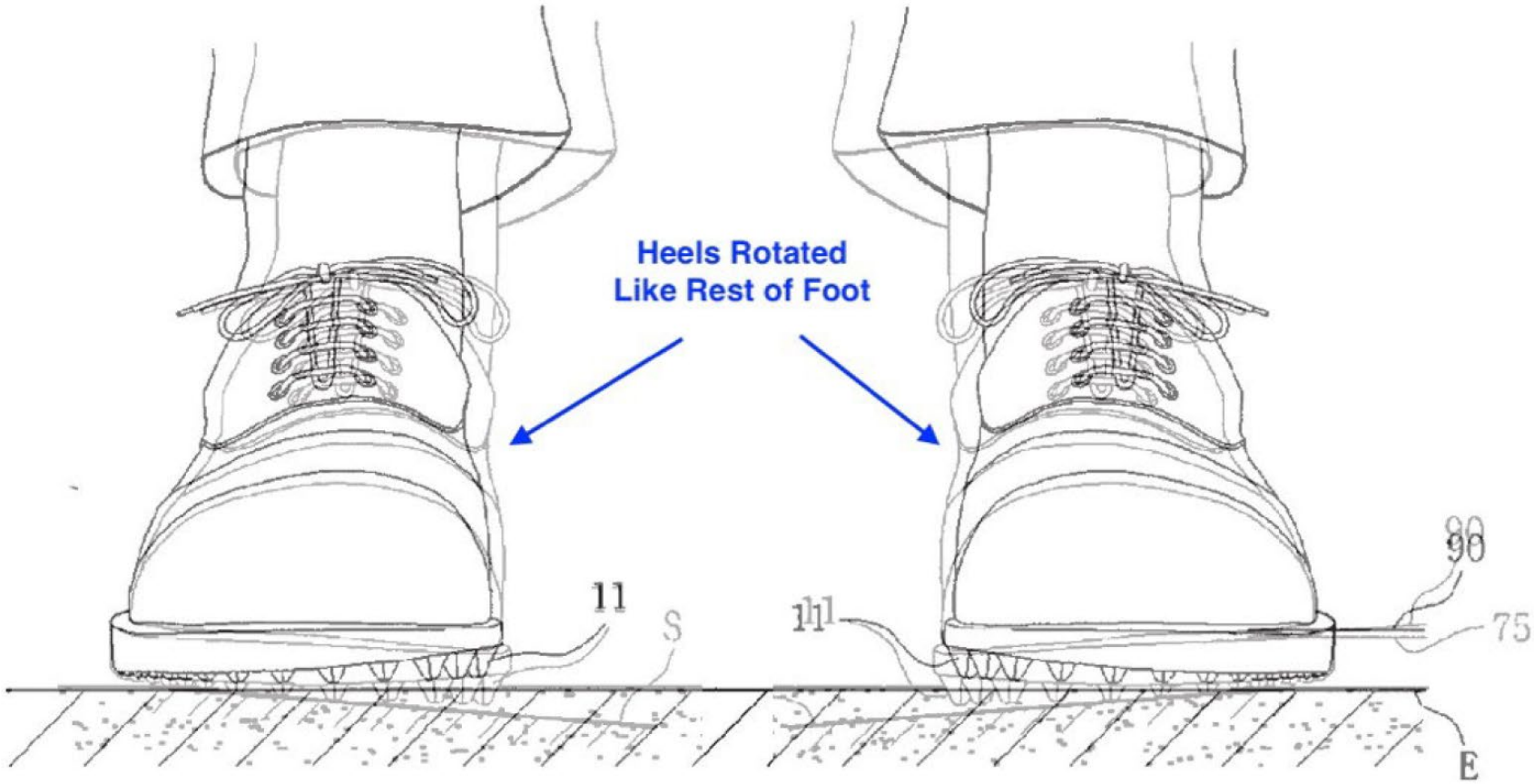

IPR2024-00636: EX1005, Fig. 5b; Paper 12, 16; EX2008 ¶¶113-115
IPR2024-00637: EX1005, Fig. 5b; Paper 12, 15; EX2008 ¶¶113-115
IPR2024-00638: EX1005, Fig. 5b; Paper 12, 15; EX2008 ¶¶113-115

Kim: "What If" Embodiment

[0046] Although the preferred embodiments of the present invention have been disclosed for illustrative purposes, those skilled in the art will appreciate that various modifications, additions and substitutions are possible, without departing from the scope and spirit of the invention as disclosed in the accompanying claims. For example, the inclined plane may be formed only at the front portion of the outsole, or only at parts of the front and/or rear portions of the outsole.

IPR2024-00636: EX1005 [0046]; EX2008 ¶¶116-120
IPR2024-00637: EX1005 [0046]; EX2008 ¶¶116-120
IPR2024-00638: EX1005 [0046]; EX2008 ¶¶116-120

Kim: "What If" Embodiment

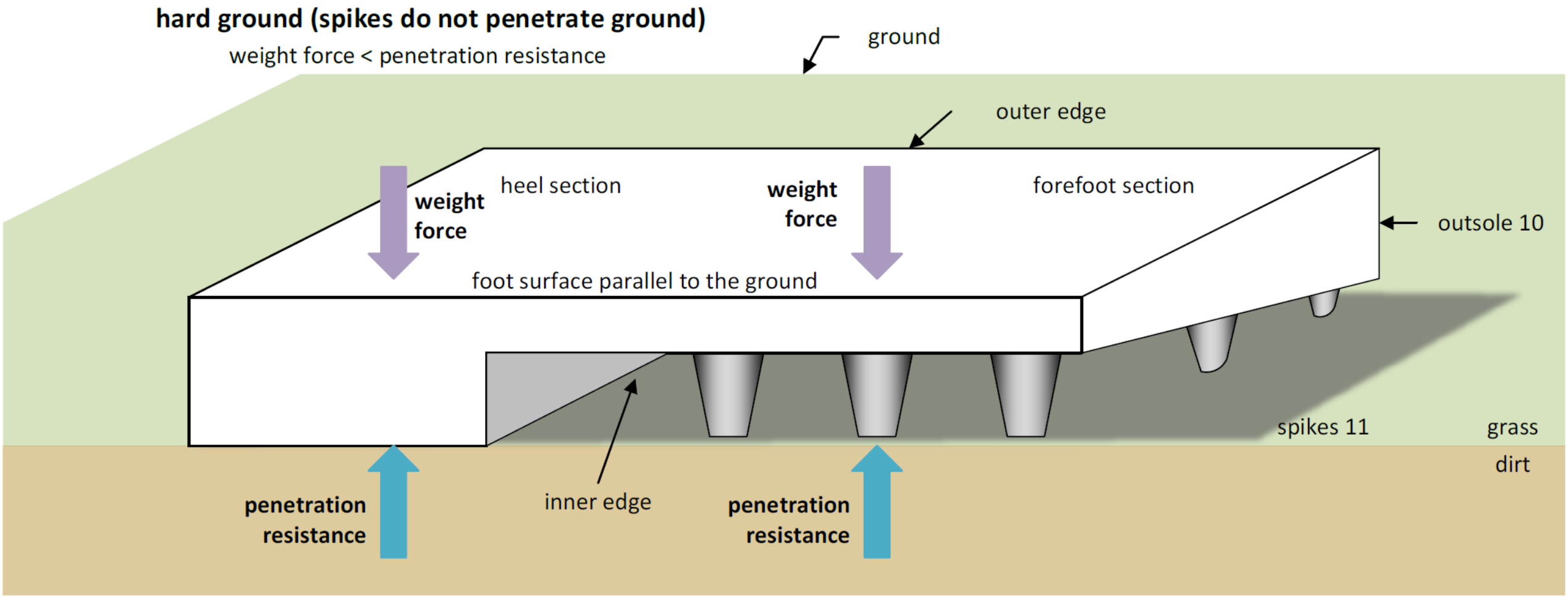

IPR2024-00636: EX2008 ¶117
IPR2024-00637: EX2008 ¶117
IPR2024-00638: EX2008 ¶117

Kim: "What If" Embodiment

soft ground (majority of weight as shown, spikes penetrate ground but limited by heel and outer edge of forefoot)

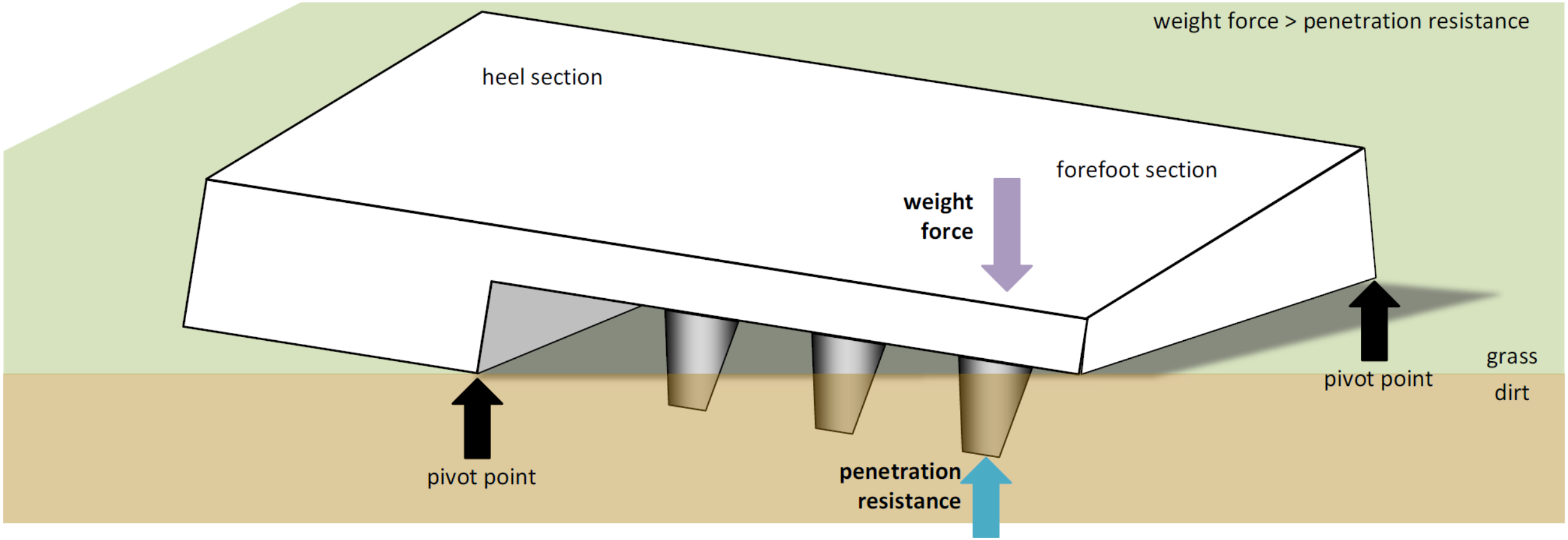

IPR2024-00636: EX2008 ¶120
IPR2024-00637: EX2008 ¶120
IPR2024-00638: EX2008 ¶120

Dufour: Overview

United States Patent [19]
Dufour

[11] **Patent Number: 4,754,561**
[45] **Date of Patent: Jul. 5, 1988**

[54] **GOLF SHOE**

[75] Inventor: **Pierre Dufour**, Annecy, France

[73] Assignee: **Salomon S.A.**, Annecy Cedex, France

[21] Appl. No.: **48,206**

[22] Filed: **May 11, 1987**

[30] **Foreign Application Priority Data**

May 9, 1986 [FR] France 86 07102

[51] **Int. Cl.**[4] **A43B 5/00**; A43C 15/02
[52] **U.S. Cl.** ..... **36/127**; 36/31; 36/59 C
[58] **Field of Search** ..... 36/28, 30 R, 30 A, 31, 36/59 R, 59 B, 59 C, 103, 113, 114, 124, 127, 134

[56] **References Cited**

U.S. PATENT DOCUMENTS

2,616,190	11/1952	Darby	36/25 R X
2,847,769	8/1958	Schlesinger	36/127
2,855,704	10/1958	Schlesinger	36/25 R X
3,593,436	7/1971	Vietas	36/59 C X
4,506,462	3/1985	Cavagnagh	36/31 X
4,547,979	10/1985	Harada et al.	36/31 X
4,642,911	2/1987	Talarico	36/30 R
4,685,227	8/1987	Simmons	36/127

Primary Examiner—Donald Watkins
Attorney, Agent, or Firm—Pollock, Vande Sande & Priddy

[57] **ABSTRACT**

Golf shoe (1), the sole (2) of which has two separate areas (3) and (4), one of which (4) is provided with a shock absorbing element (5) and a deformable structure (6) to allow the golfer's foot to roll on the outer edge of the sole.

21 Claims, 4 Drawing Sheets

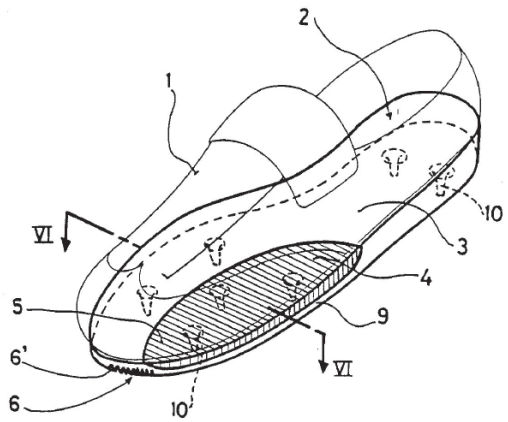

IPR2024-00636: EX1006
IPR2024-00637: EX1006
IPR2024-00638: EX1006

Dufour: Fig. 8-10 Embodiment

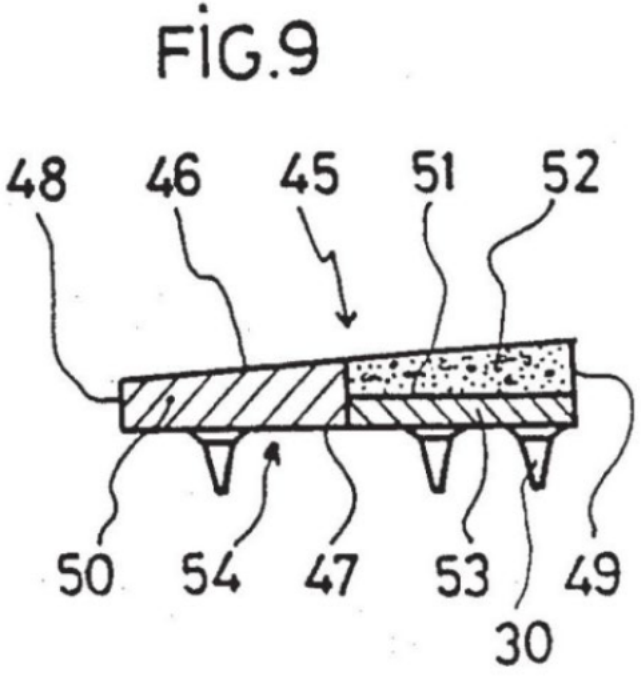

30 – spikes
45 – sole
46 – inside support surface
47 – walking surface
48 – inner edge
49 – outer edge
50 – passive zone
51 – active zone
52 – shock absorbing element
53 – walking sole portion
54 – walking surface

IPR2024-00636: EX1006, Fig. 9; Paper 12, 17-18; EX2008 ¶127
IPR2024-00637: EX1006, Fig. 9; Paper 12, 16-18; EX2008 ¶127
IPR2024-00638: EX1006, Fig. 9; Paper 12, 16-18; EX2008 ¶127

Dufour: Fig. 8-10 Embodiment

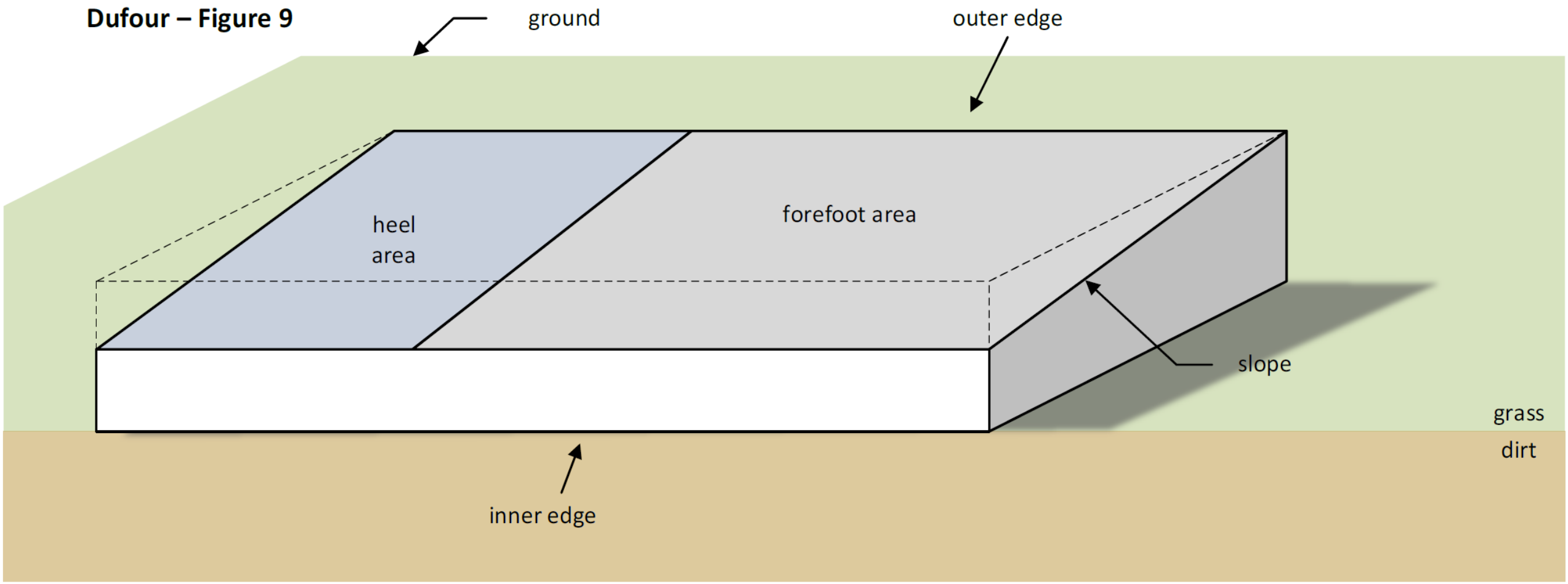

IPR2024-00636: EX1006, Fig. 9; Paper 12, 17-18; EX2008 ¶128
IPR2024-00637: EX1006, Fig. 9; Paper 12, 16-18; EX2008 ¶128
IPR2024-00638: EX1006, Fig. 9; Paper 12, 16-18; EX2008 ¶128

Dufour: Fig. 11-12 Embodiment

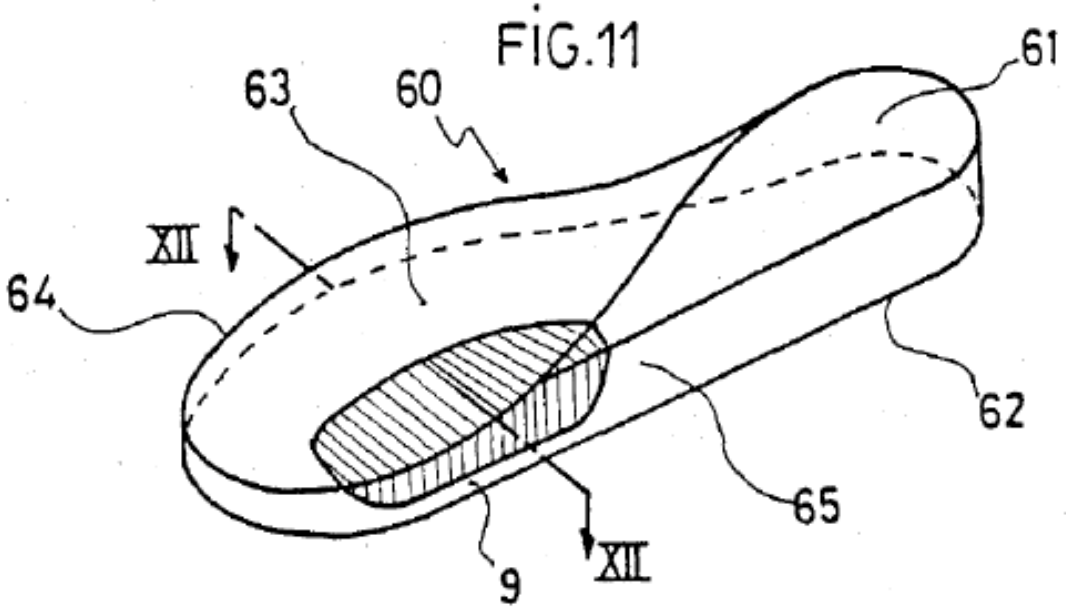

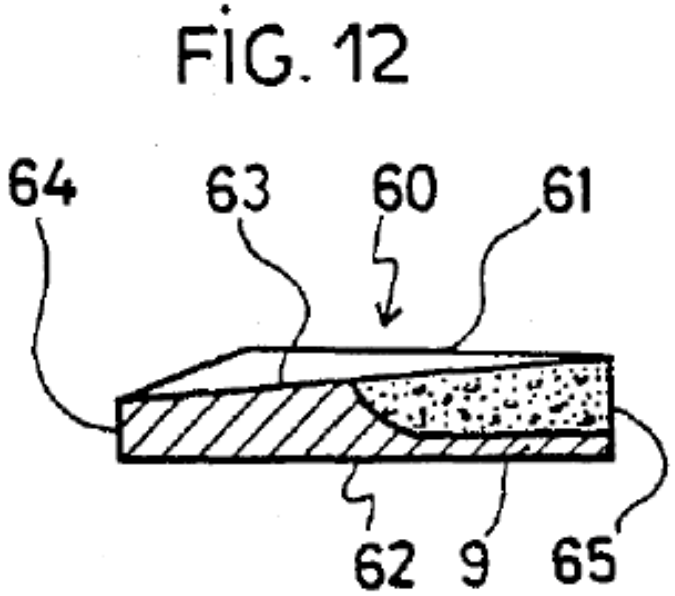

IPR2024-00636: EX1006, Fig. 11-12; Paper 12, 18-19; EX2008 ¶129
IPR2024-00637: EX1006, Fig. 11-12; Paper 12, 17-18; EX2008 ¶129
IPR2024-00638: EX1006, Fig. 11-12; Paper 12, 17-18; EX2008 ¶129

Dufour: Fig. 11-12 Embodiment

Dufour – Figures 11 and 12

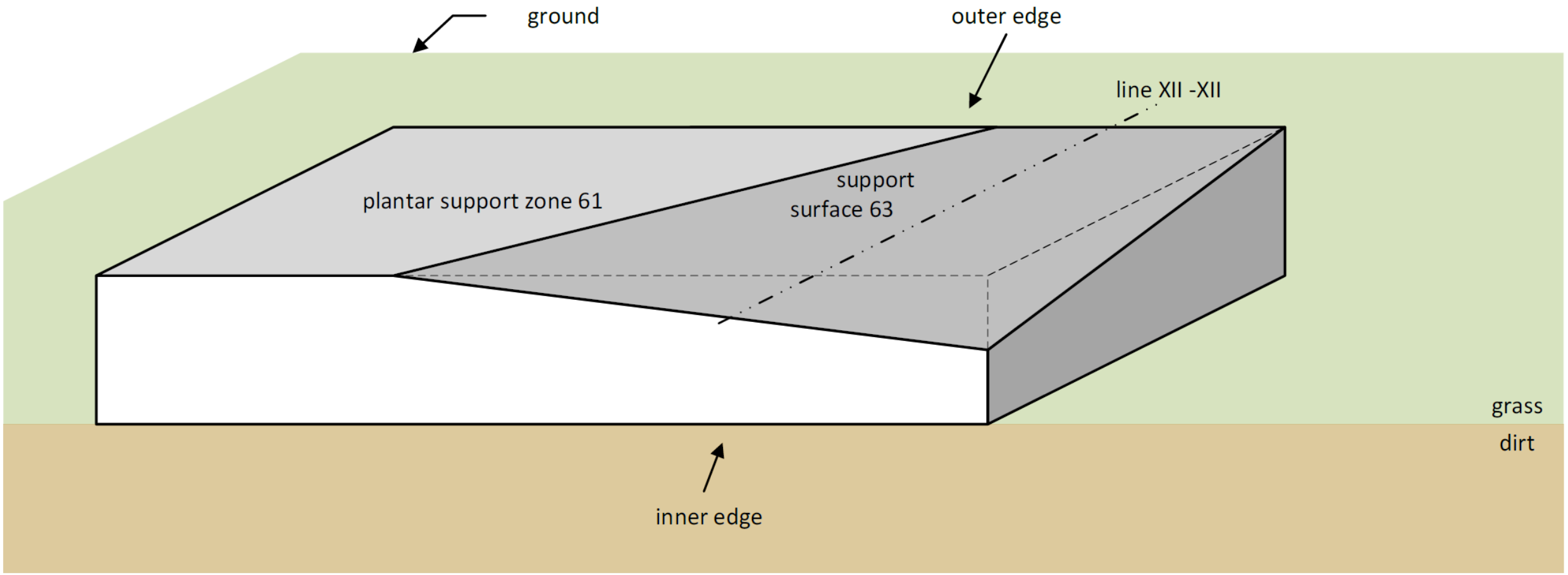

IPR2024-00636: EX1006, Fig. 11-12; Paper 12, 18-19; EX2008 ¶134
IPR2024-00637: EX1006, Fig. 11-12; Paper 12, 17-18; EX2008 ¶134
IPR2024-00638: EX1006, Fig. 11-12; Paper 12, 17-18; EX2008 ¶134

Dufour: Figures 11 and 12 Have Same Height at Heel and Outer Toe

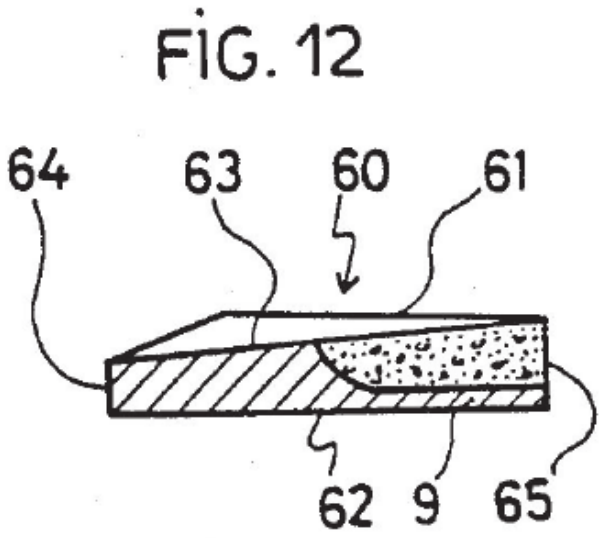

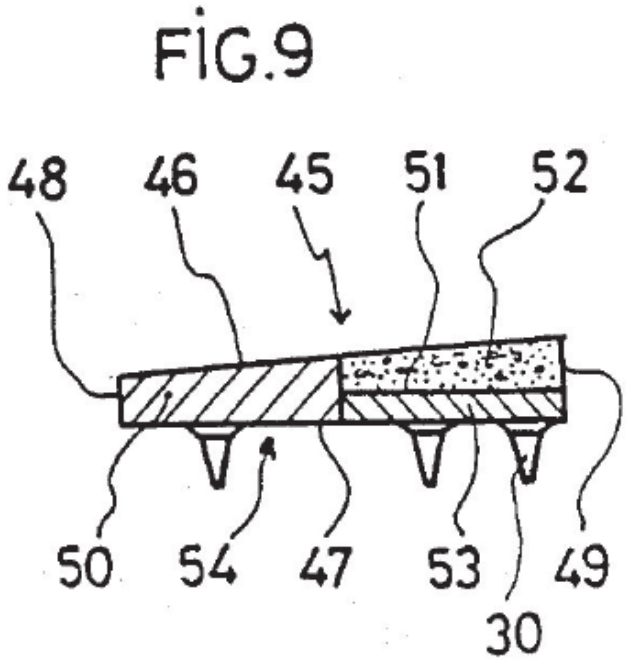

IPR2024-00636: EX1006, Figs. 9, 12; Paper 12, 18-19; Paper 23, 16-19
IPR2024-00637: EX1006, Figs. 9, 12; Paper 12, 17-18; Paper 23, 16-20
IPR2024-00638: EX1006, Figs. 9, 12; Paper 12, 17-18; Paper 23, 16-21

Dufour: Figures 11 and 12 Have Same Height at Heel and Outer Toe

EX1002 (-636)

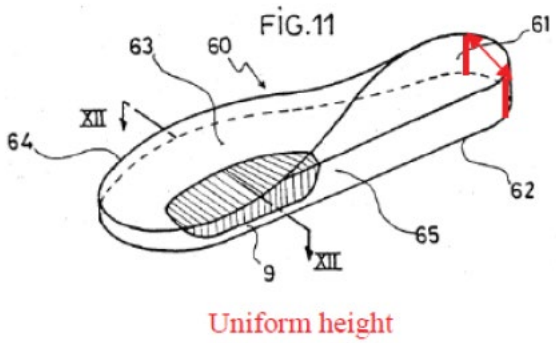

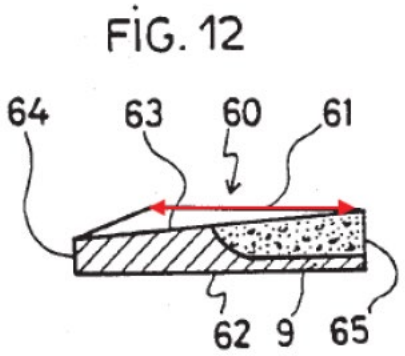

EX1002 (-637)

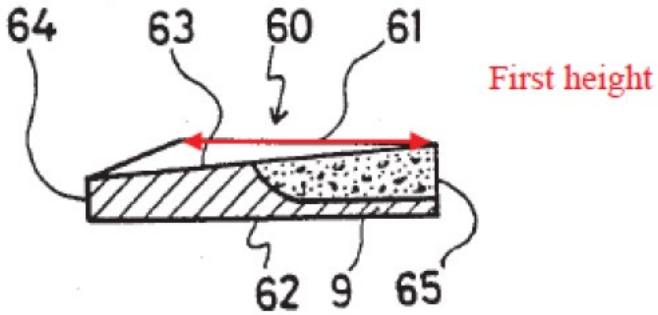

17 Q. Figure 11 and 12 are the same embodiment.
18 Correct?
19 A. They're the same embodiment. Yes.
20 Q. And you drew the first height in Figure 12
21 along the back edge of the figure. Right?
22 A. That's what I've drawn in my declaration.

EX1002 (-638)

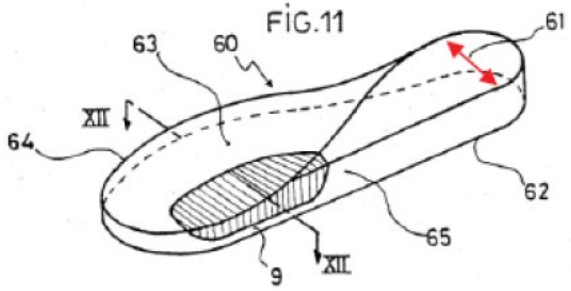

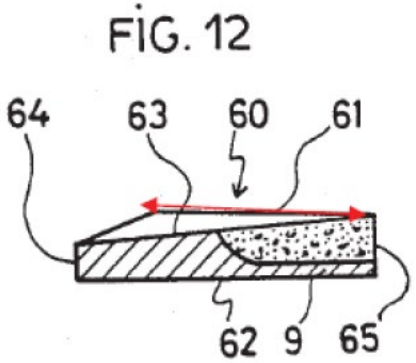

IPR2024-00636: Paper 23, 16-19; EX1002, 50; EX2010, 105:17-22
IPR2024-00637: Paper 23, 16-20; EX1002, 54; EX2010, 105:17-22
IPR2024-00638: Paper 23, 16-21; EX1002, 61; EX2010, 105:17-22

Rubin: Overview

United States Patent [19]
Rubin

[11] **3,789,523**
[45] **Feb. 5, 1974**

[54] **GOLF SHOE**

[76] Inventor: **Robert M. Rubin,** 6545 Rustic Dr., Mesa, Ariz. 85205

[22] Filed: **Oct. 16, 1972**

[21] Appl. No.: **297,926**

[52] **U.S. Cl.** ..... **36/2.5 AH,** 36/73
[51] **Int. Cl.** **A43b 13/22**
[58] **Field of Search**. 36/2.5 R, 2.5 AH, 59 R, 67 R, 36/67 D, 73

[56] **References Cited**

UNITED STATES PATENTS

2,083,310	6/1937	Barber	36/73
2,485,706	10/1949	Cruise	36/73
2,959,873	11/1960	Schlesinger	36/2.5 AH

FOREIGN PATENTS OR APPLICATIONS

1,141,593	9/1957	France	36/2.5 AH

Primary Examiner—Patrick D. Lawson
Attorney, Agent, or Firm—Allen D. Brufsky

[57] **ABSTRACT**

A golf shoe designed to aid a golfer in assuming a proper stance on a golf playing surface so that when addressing the ball the golfer pivots about a more or less stationary vertical line rather than swaying during his swing. The shoe includes a sole attached to an upper. The sole has opposed inner and outer sides, the outer side of said sole extending from the upper to a lower elevation than the inner side to create a toe-in effect when the golfer assumes his stance on a golf playing surface. A metal plate is fixed to the sole along the outer side thereof to preclude undue bending and wear of the sole edge during the pivotal portion of the golfer's swing. A plurality of cleats are attached to the sole and extend along the sole adjacent the outer and inner sides thereof. The cleats adjacent the outer side of the sole are smaller than the cleats adjacent the inner side of the sole by an amount approximately equal to the difference in elevation between the outer and inner sides of the sole so that when the golfer walks on a planar surface, his foot will be substantially level.

6 Claims, 4 Drawing Figures

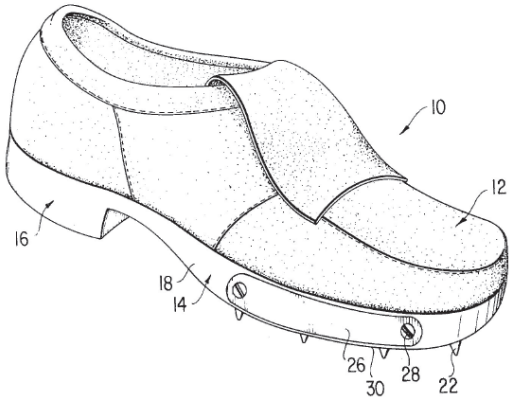

IPR2024-00636: EX1007
IPR2024-00637: EX1007
IPR2024-00638: EX1007

Rubin: Overview

[57] **ABSTRACT**

A golf shoe designed to aid a golfer in assuming a proper stance on a golf playing surface so that when addressing the ball the golfer pivots about a more or less stationary vertical line rather than swaying during his swing. The shoe includes a sole attached to an upper. The sole has opposed inner and outer sides, the outer side of said sole extending from the upper to a lower elevation than the inner side to create a toe-in effect when the golfer assumes his stance on a golf playing surface. A metal plate is fixed to the sole along the outer side thereof to preclude undue bending and wear of the sole edge during the pivotal portion of the golfer's swing. A plurality of cleats are attached to the sole and extend along the sole adjacent the outer and inner sides thereof. The cleats adjacent the outer side of the sole are smaller than the cleats adjacent the inner side of the sole by an amount approximately equal to the difference in elevation between the outer and inner sides of the sole so that when the golfer walks on a planar surface, his foot will be substantially level.

IPR2024-00636: EX1007, Abstract
IPR2024-00637: EX1007, Abstract
IPR2024-00638: EX1007, Abstract

Rubin: Entire Foot Stays Parallel to the Ground

- "The cleats adjacent the outer side of the sole are smaller than the cleats adjacent the inner side of the sole by an amount approximately equal to the difference in elevation between the outer and inner sides of the sole so that when the golfer walks on a planar surface, his foot will be substantially level." EX1007, Abstract.

- "However, the cleats adjacent the outer side of the sole are smaller than the cleats adjacent the inner side of the sole by an amount approximately equal to the difference in elevation between the outer and inner sides of the sole so that when the golfer walks his foot will be substantially level." EX1007, 2:16-25.

- "In between shots, and when walking on other planar surfaces, shoe 10 on the foot of the golfer will remain substantially level as illustrated in FIG. 2. This is due to the difference in sizes of the cleats 22 and will preclude undue strain on the golfer's foot." EX1007, 4:4-8.

IPR2024-00636: EX1007, Abstract, 2:16-25, 4:4-8; Paper 12, 58-59

Rubin: Hard Surface

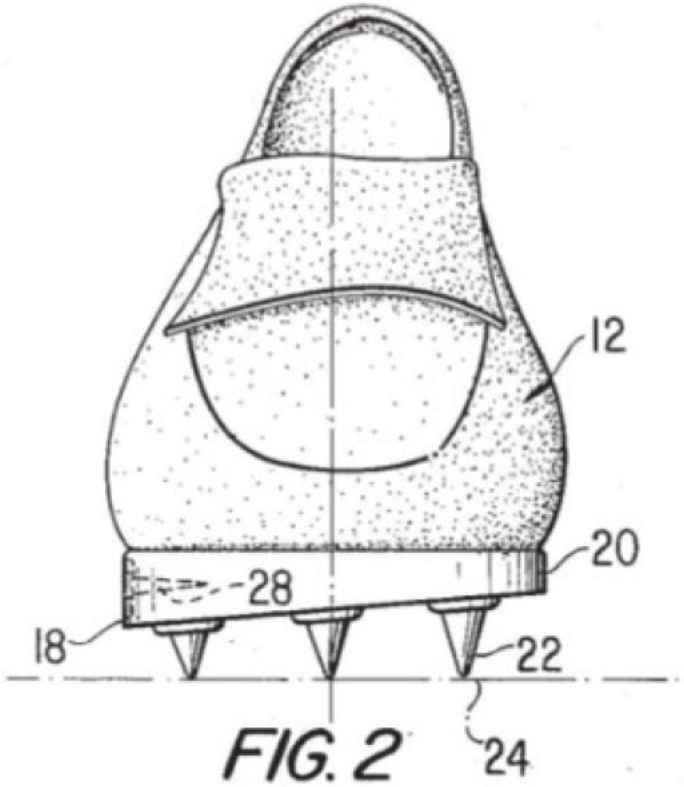

FIG. 2

IPR2024-00636: EX1007, Fig. 2; Paper 12, 19-21; EX2008 ¶¶138-155
IPR2024-00637: EX1007, Fig. 2; Paper 12, 18-21; EX2008 ¶¶138-155
IPR2024-00638: EX1007, Fig. 2; Paper 12, 18-20; EX2008 ¶¶138-155

Rubin: Hard Surface

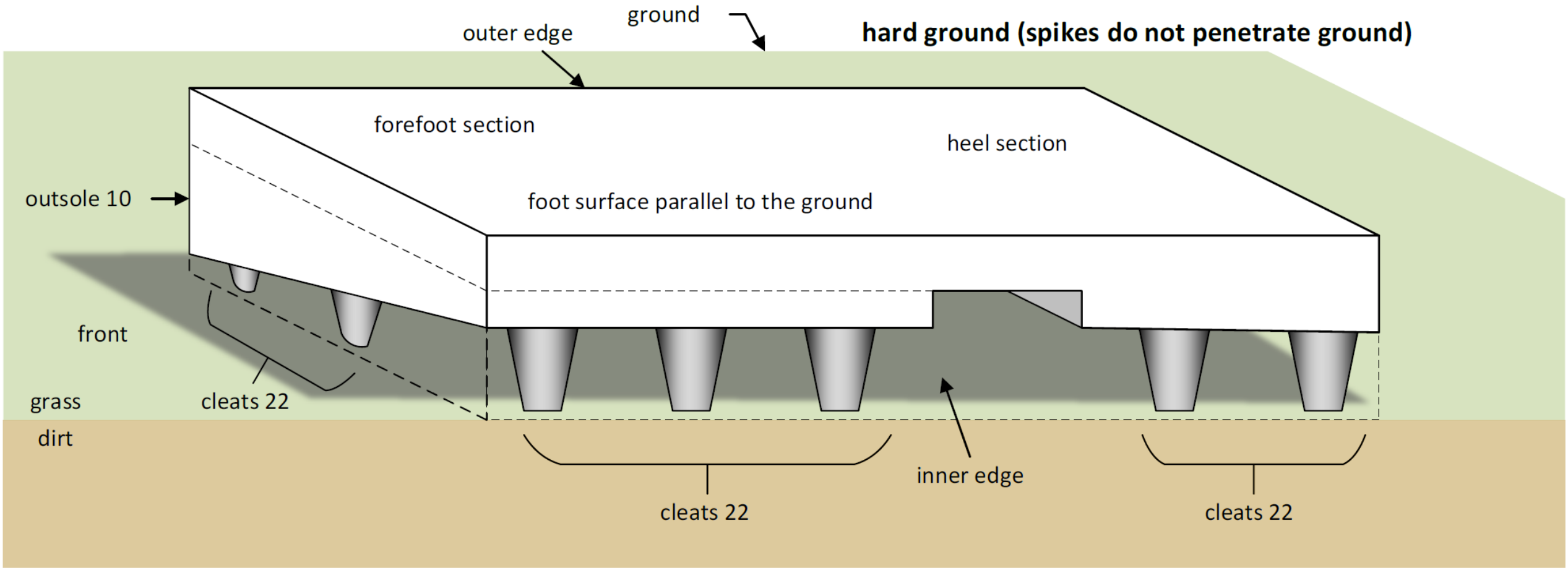

IPR2024-00636: Paper 12, 22; EX2008 ¶148
IPR2024-00637: Paper 12, 22; EX2008 ¶148
IPR2024-00638: Paper 12, 21; EX2008 ¶148

Rubin: Soft Surface

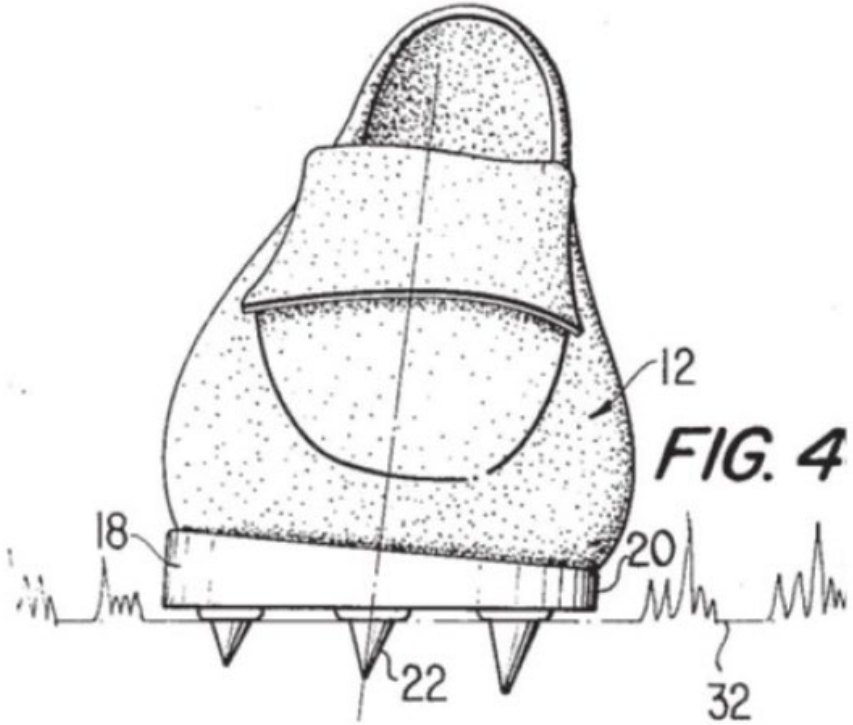

IPR2024-00636: EX1007, Fig. 4; Paper 12, 21-22; EX2008 ¶¶138-155
IPR2024-00637: EX1007, Fig. 4; Paper 12, 21; EX2008 ¶¶138-155
IPR2024-00638: EX1007, Fig. 4; Paper 12, 20-21; EX2008 ¶¶138-155

Rubin: Soft Surface

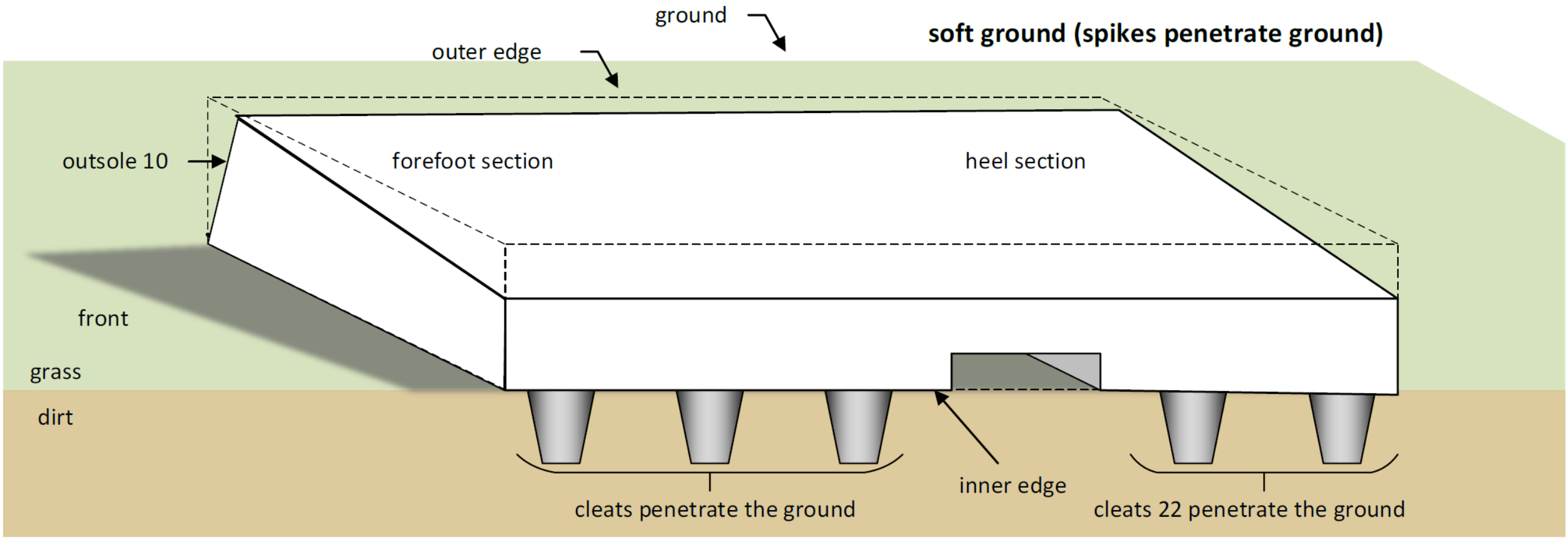

IPR2024-00636: Paper 12, 23; EX2008 ¶149
IPR2024-00637: Paper 12, 22; EX2008 ¶149
IPR2024-00638: Paper 12, 22; EX2008 ¶149

Rubin: Entire Foot Tilts

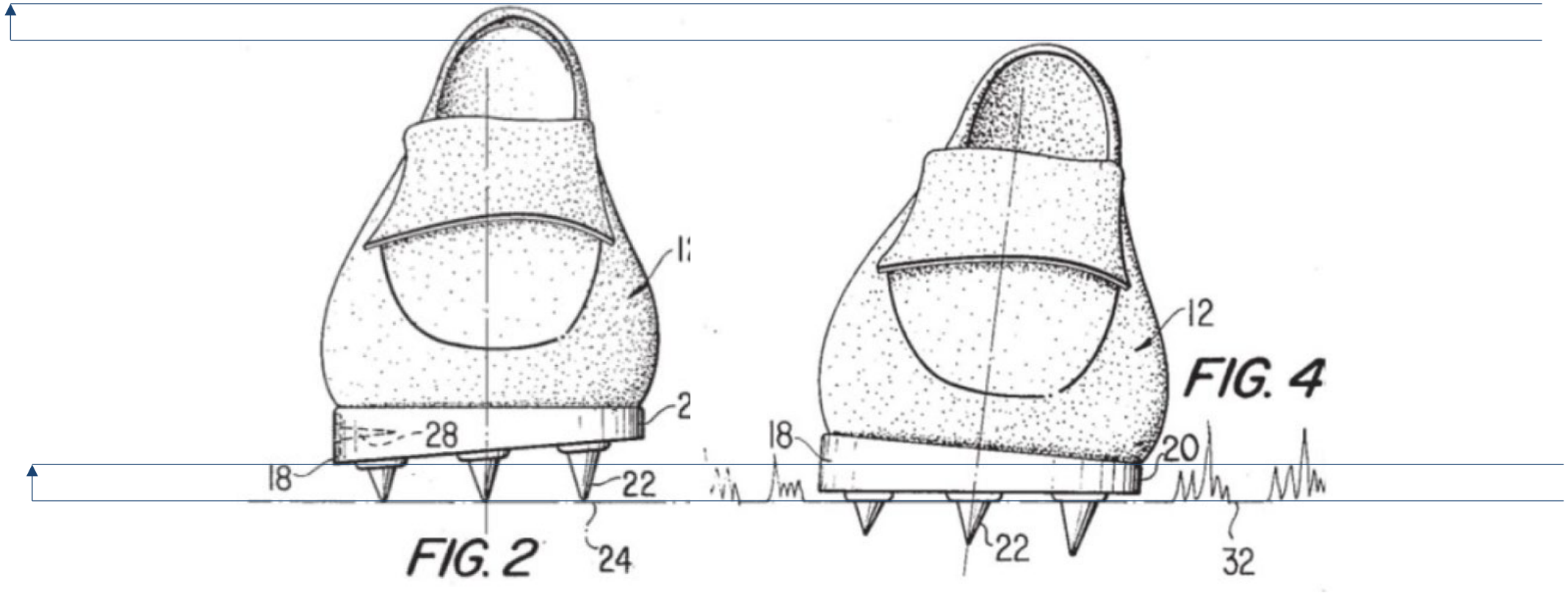

IPR2024-00636: EX1006, Fig. 2, 4; Paper 12, 19-23; EX2008 ¶¶148-149
IPR2024-00637: EX1006, Fig. 2, 4; Paper 12, 18-22; EX2008 ¶¶148-149
IPR2024-00638: EX1006, Fig. 2, 4; Paper 12, 18-22; EX2008 ¶¶148-149

Rubin: Entire Foot Tilts

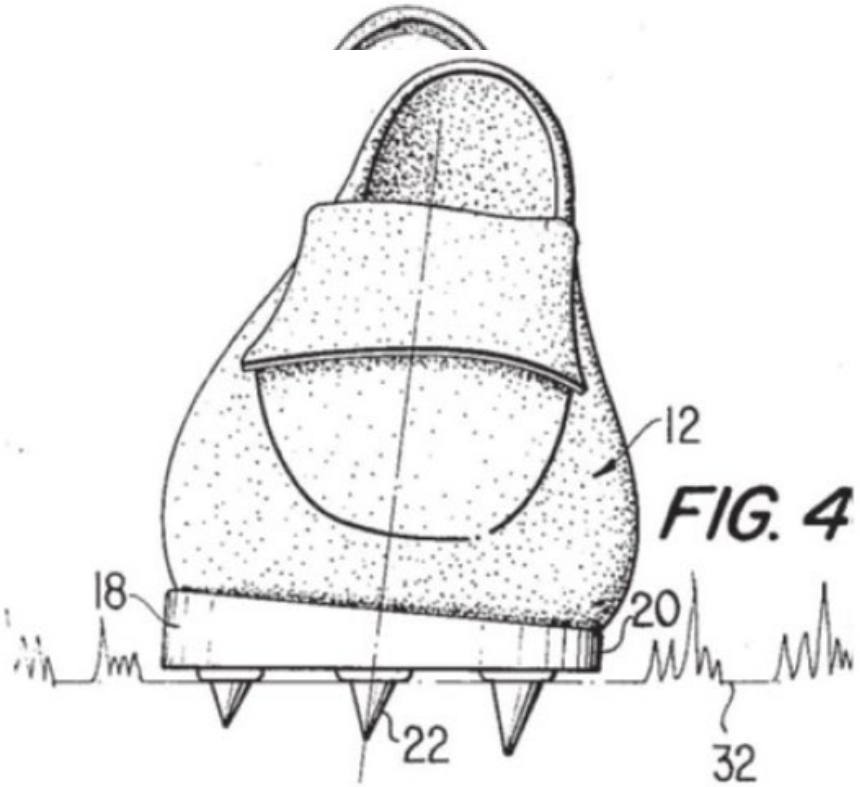

IPR2024-00636: EX1006, Fig. 2, 4; Paper 12, 19-23; EX2008 ¶¶148-149
IPR2024-00637: EX1006, Fig. 2, 4; Paper 12, 18-22; EX2008 ¶¶148-149
IPR2024-00638: EX1006, Fig. 2, 4; Paper 12, 18-22; EX2008 ¶¶148-149

Rubin: Entire Foot Tilts

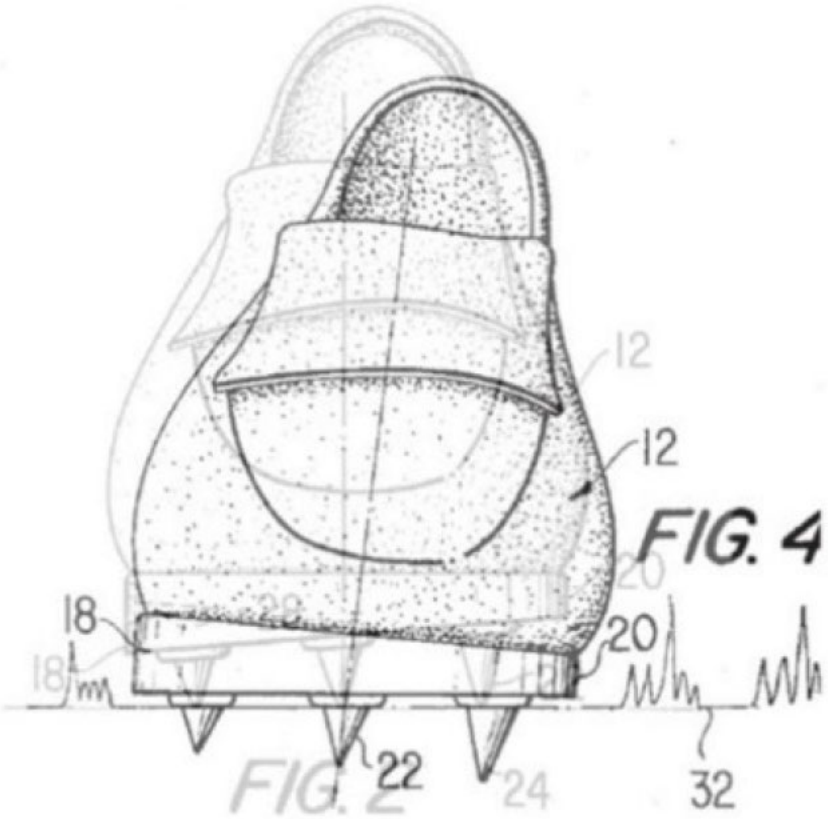

IPR2024-00636: EX1006, Fig. 2, 4; Paper 12, 19-23; EX2008 ¶¶148-149
IPR2024-00637: EX1006, Fig. 2, 4; Paper 12, 18-22; EX2008 ¶¶148-149
IPR2024-00638: EX1006, Fig. 2, 4; Paper 12, 18-22; EX2008 ¶¶148-149

Rubin: "What If" Embodiment

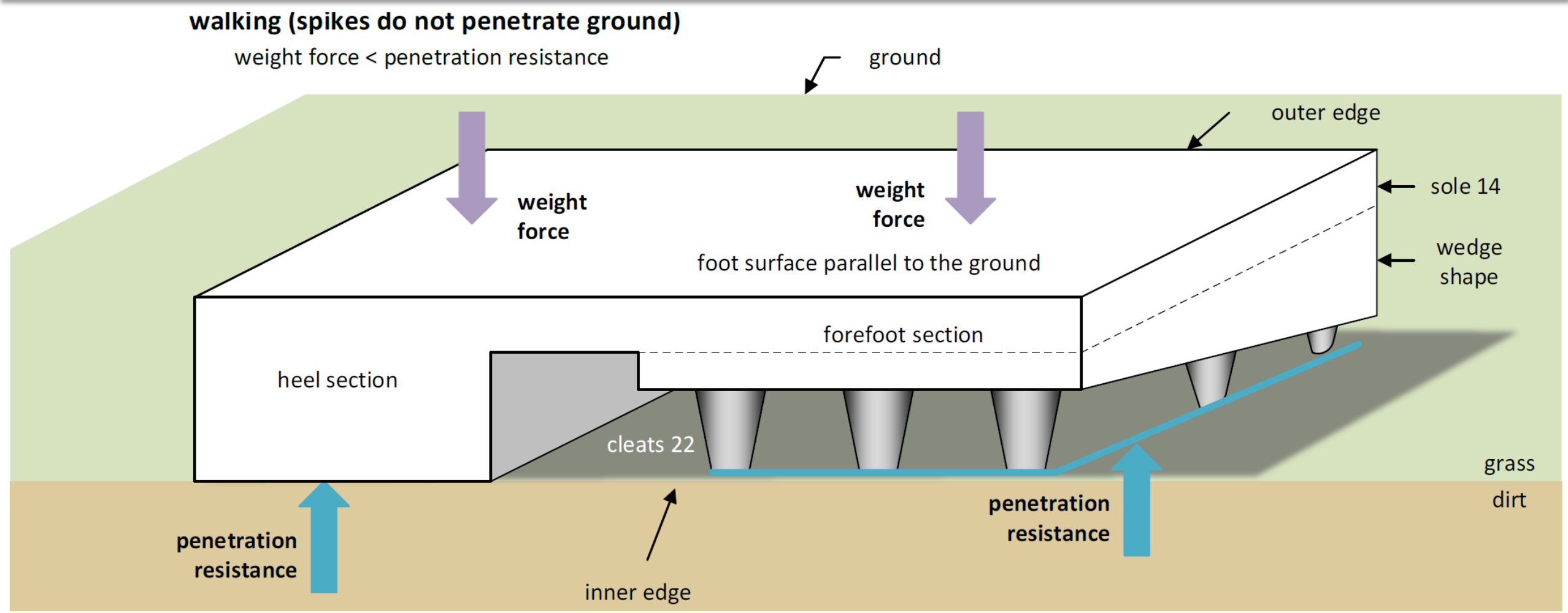

IPR2024-00636: EX2008 ¶152
IPR2024-00637: EX2008 ¶152
IPR2024-00638: EX2008 ¶152

Rubin: "What If" Embodiment

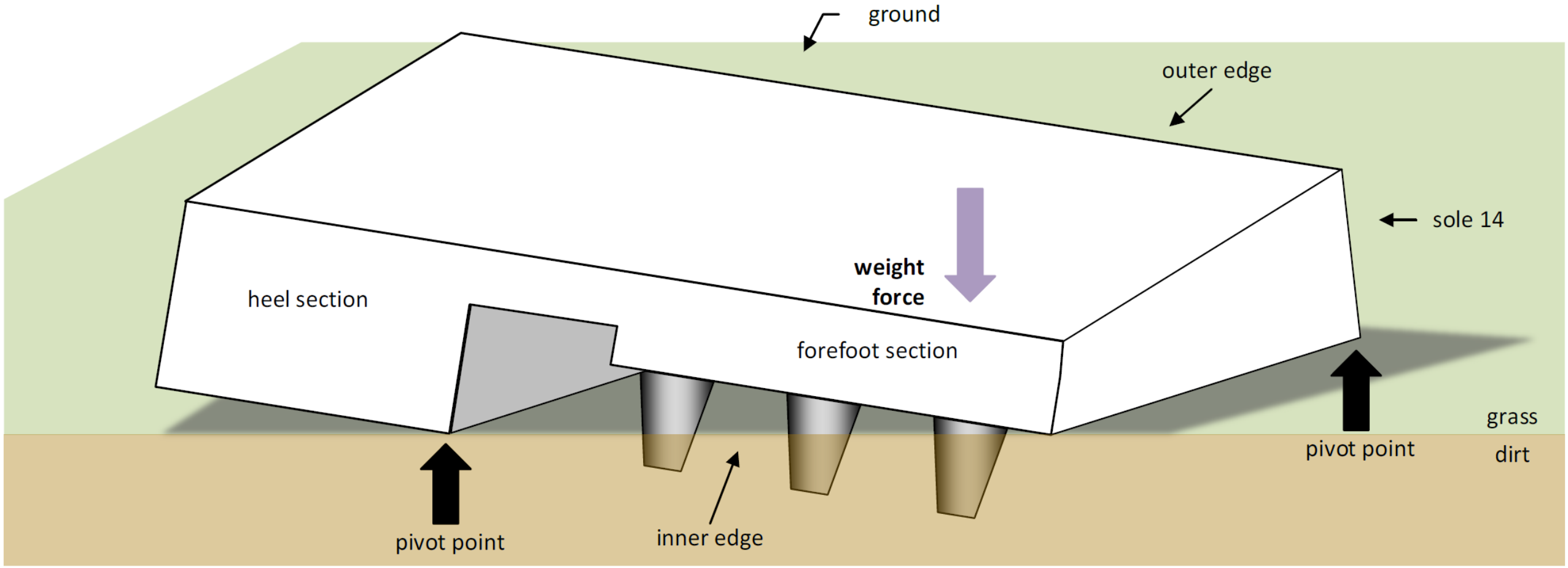

IPR2024-00636: EX2008 ¶154
IPR2024-00637: EX2008 ¶154
IPR2024-00638: EX2008 ¶154

CLAIM CONSTRUCTION

"Athletic Positioning"

Petitioner's Position	Patent Owner's Position
no construction	a heel section higher than the toe section and the outside edge of the toe section higher than the inside edge of the toe section

IPR2024-00636: Paper 12, 27-31; Paper 15, 1, 27; Paper 23, 24
IPR2024-00637: Paper 12, 25-29; Paper 15, 1; Paper 23, 24-25
IPR2024-00638: Paper 12, 26-30; Paper 15, 1; Paper 23, 7-8

Patent Owner's Construction of "Athletic Positioning" Is Consistent with the Claims, Specification, and Figures

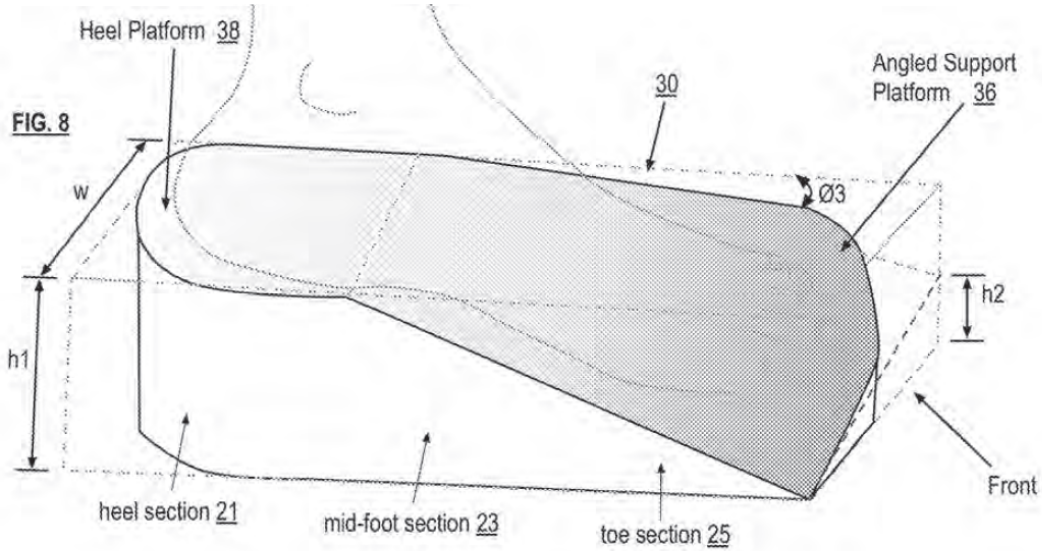

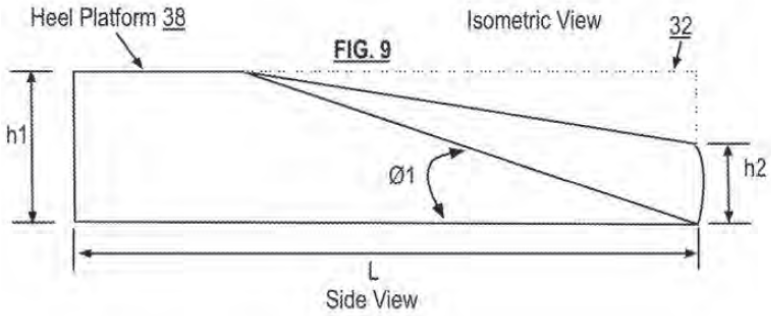

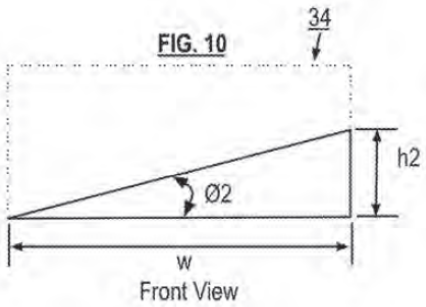

IPR2024-00636: Paper 12, 27-31; EX2008 ¶¶144-146
IPR2024-00637: Paper 12, 25-29; EX2008 ¶¶144-146
IPR2024-00638: Paper 12, 26-30; EX2008 ¶¶144-146

Petitioner's Non-Construction Reads Out Limitations

1 Q. Athletic positioning is in the claims of
2 the '291 patent. Right?
3 A. It is one of the claims. Yes.
4 Q. Okay. And so does the term limit the
5 claims in your view?
6 MR. BUGG: Objection, vague, calls for
7 speculation. You can answer.
8 A. Does the term limit the claims? Is that
9 the question?
10 Q. Yes.
11 A. I would say that the term is something
12 that is different than the slope claims because it
13 is a separate claim.
14 So it would have to mean something -- you
15 wouldn't be able to have a claim that states
16 "having a slope" and then also a claim that states
17 "having athletic positioning."

IPR2024-00636: EX2010, 53:1-17; Paper 23, 24
IPR2024-00637: EX2010, 53:1-17; Paper 23, 24-25
IPR2024-00638: EX2010, 53:1-17; Paper 23, 7-8

Measuring Claimed Heights and Slopes

Petitioner's Position	Patent Owner's Position
The slopes and heights in the challenged claims should all be measured relative to the ground (or in some instances, the bottom of the sole), not the bottom of the shoes, and should exclude cleats from the measurements.	The slopes and heights in the challenged claims should all be measured relative to the bottom of the shoe, not the ground.

IPR2024-00636: Paper 12, 31-35; Paper 15, 5-10; Paper 23, 7-12
IPR2024-00637: Paper 12, 30-34; Paper 15, 6-10; Paper 23, 8-13
IPR2024-00638: Paper 12, 31-36; Paper 15, 11-16; Paper 23, 12-16

The Claimed Slopes Should be Measured Relative to the Bottom of the Shoe IPR2024-00636 ('786 Patent)

A shoe comprises: …

wherein the uniform height establishes a ***reference slope*** from the outer edge to the inner edge, the ***reference slope substantially parallel to a bottom surface of the apparatus***;

…

the first slope, second slope, and the third slope ***each greater than the reference slope …***

IPR2024-00636: EX1001, claim 5

The Claimed Slopes Should be Measured Relative to the Bottom of the Shoe IPR2024-00636 ('786 Patent)

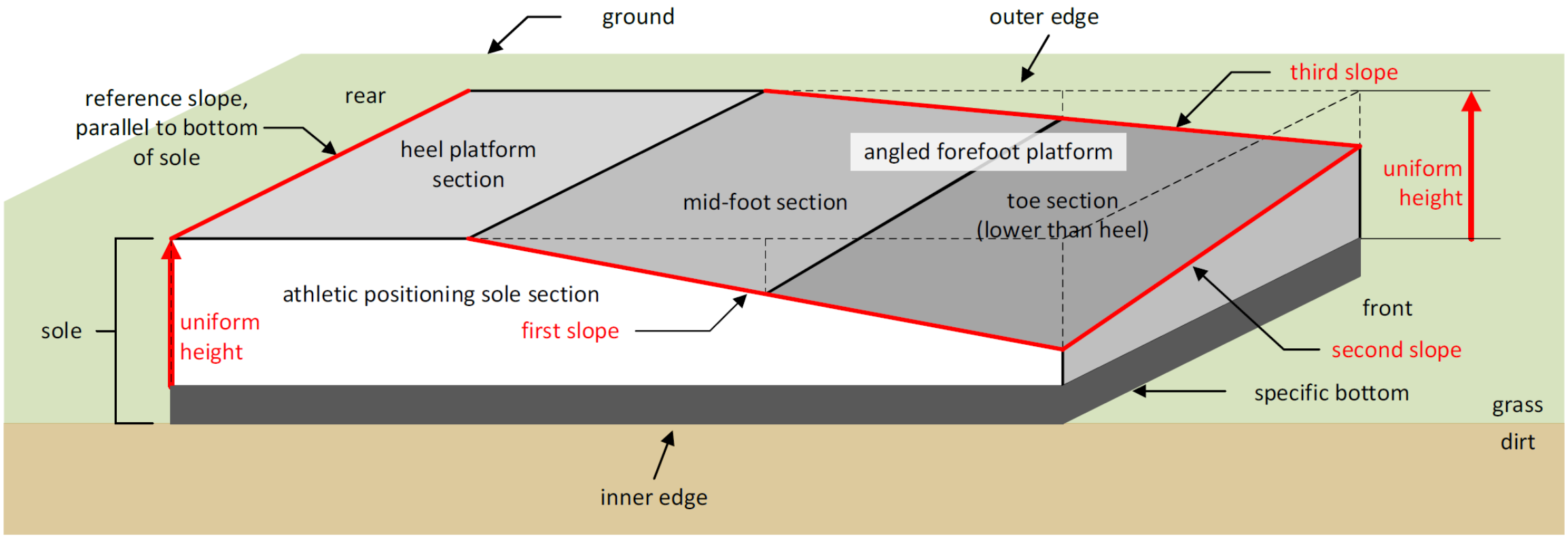

IPR2024-00636: Paper 12, 31-35; Paper 15, 5-10; Paper 23, 7-12

The Claimed Heights Should be Measured Relative to the Bottom of the Shoe IPR2024-00637 ('291 Patent)

A shoe comprises:

…

wherein a combination of the midsole, the insole, and the bottom outsole form an athletic positioning shape, wherein the athletic positioning shape has: ***a first height*** at an inside edge and at an outside edge of the shoe along a heel section of the shoe,

a second height on the outside edge of the shoe at a toe section of the shoe,

a third height on the inside edge of the shoe at the toe section of the shoe, and

the first height being greater than the second height and the second height being greater than the third height …

IPR2024-00637: EX1001, claim 1

The Claimed Heights Should be Measured Relative to the Bottom of the Shoe IPR2024-00637 ('291 Patent)

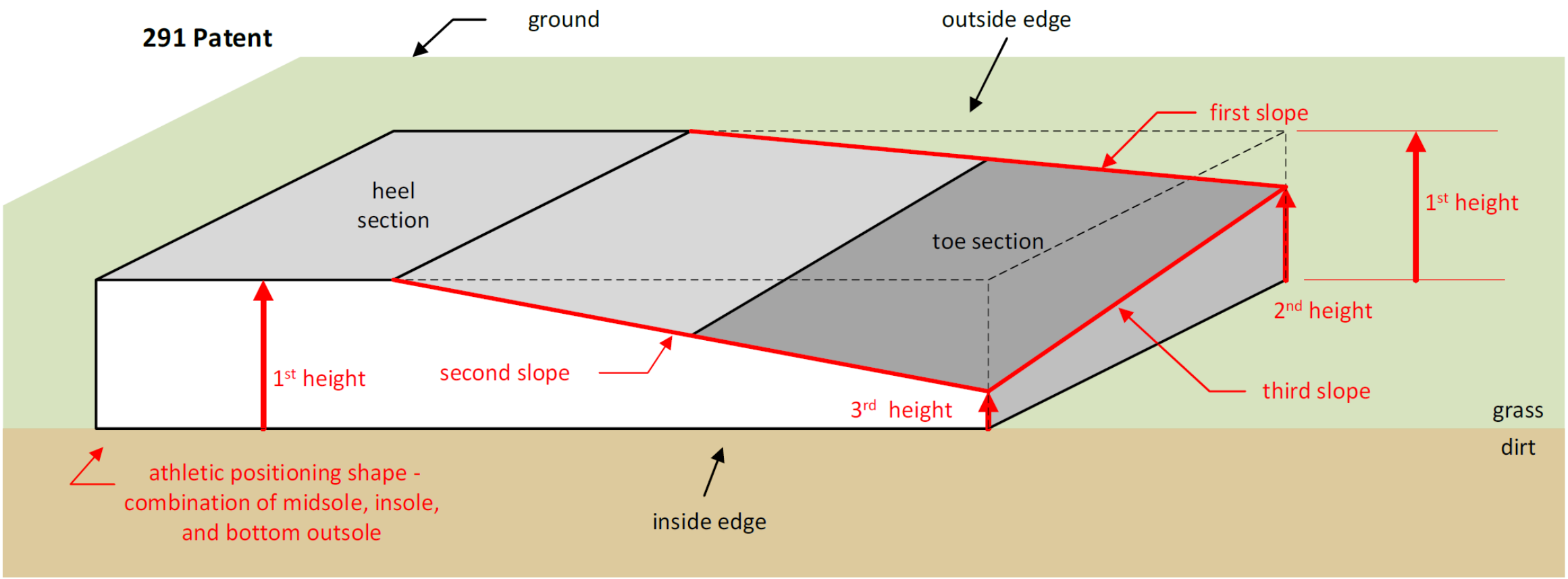

IPR2024-00637: Paper 12, 30-34; Paper 15, 6-10; Paper 23, 8-13

The Claimed Positions Should be Measured Relative to the Bottom of the Shoe IPR2024-00638 ('760 Patent)

… ***a left foot shoe*** including: …

a left sole coupled to the left upper shoe portion, wherein a ***foot platform of the left sole provides an athletic positioning of a left big toe area of the left shoe at a lower position than a left heel area of the left shoe and at a lower position than an outer small toe area of the left shoe***, wherein, from an inner edge to an outer edge of the left shoe, the left heel area has substantially no slope…

IPR2024-00638: EX1001, claim 1

The Claimed Positions Should be Measured Relative to the Bottom of the Shoe IPR2024-00638 ('760 Patent)

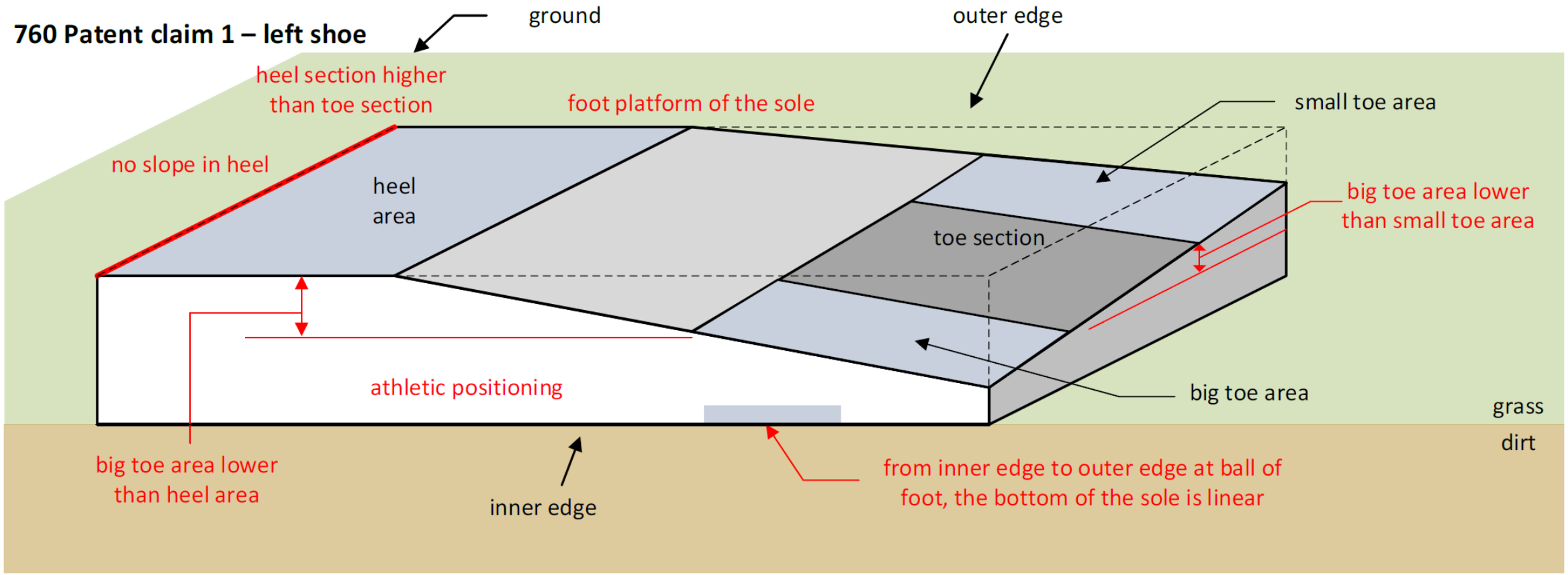

IPR2024-00638: Paper 12, 31-36; Paper 15, 11-16; Paper 23, 12-16

Petitioner's Construction Ignores Critical Heights and Creates Non-Existent Slopes

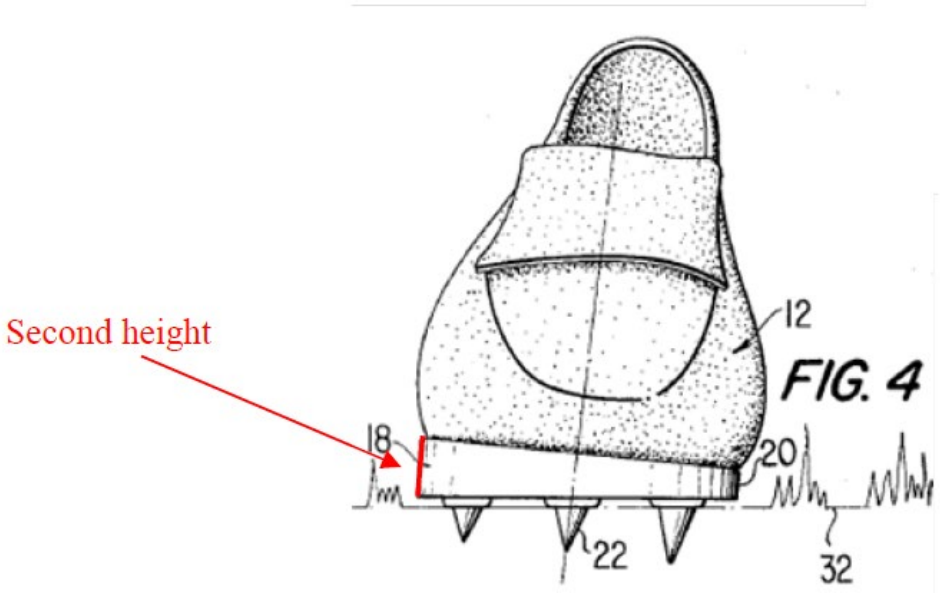

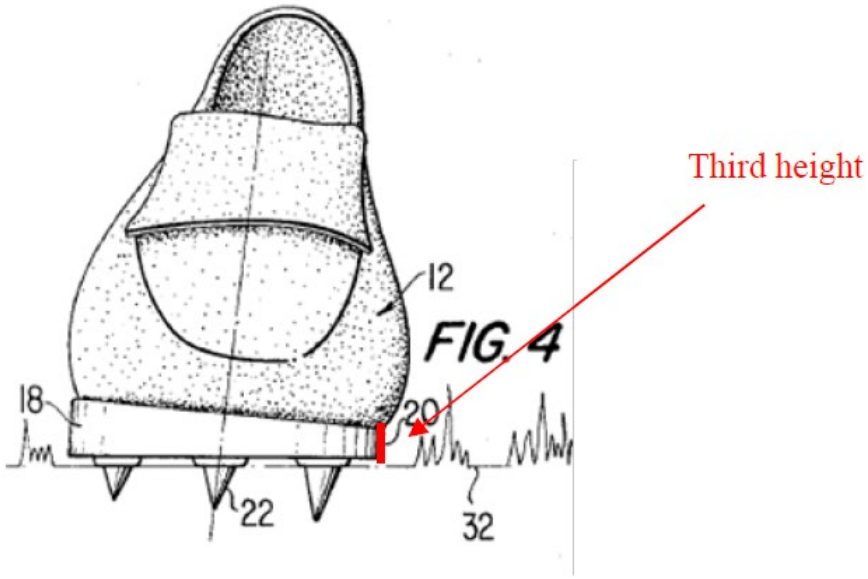

1 Q. You're excluding the height of the cleats
2 in these measurements too. Correct?
3 A. I am. Yes.

IPR2024-00636: EX2010, 112:1-3; Paper 1, 46
IPR2024-00637: EX2010, 112:1-3; Paper 1, 46
IPR2024-00638: EX2010, 112:1-3; Paper 1, 42

“CONVENTIONAL SHOES”

Petitioner's "Conventional Shoe" Arguments Change Nothing

19 Can you tell what the interior dimensions
20 of the shoe are from this picture of the shoe on
21 the outside?

1 A. You can't specify, see specifically what
2 the dimensions are from this view.

IPR2024-00636: EX2010, 38:19-39:21; Paper 23, 6-7
IPR2024-00637: EX2010, 38:19-39:21; Paper 23, 6-7
IPR2024-00638: EX2010, 38:19-39:21; Paper 23, 6-7

Mr. Delgatty's New Reply Cutaways are Improper

Petition Declaration (EX1002)

Reply Declaration (EX1022)

IPR2024-00636: Paper 23, 6-7
IPR2024-00637: Paper 23, 6-7
IPR2024-00638: Paper 23, 6-7

KIM GROUNDS

KIM GROUND

IPR2024-00636 (’786 Patent)

IPR2024-00636 ('786 Patent): No First, Second, or Third Slope – Primary Embodiment

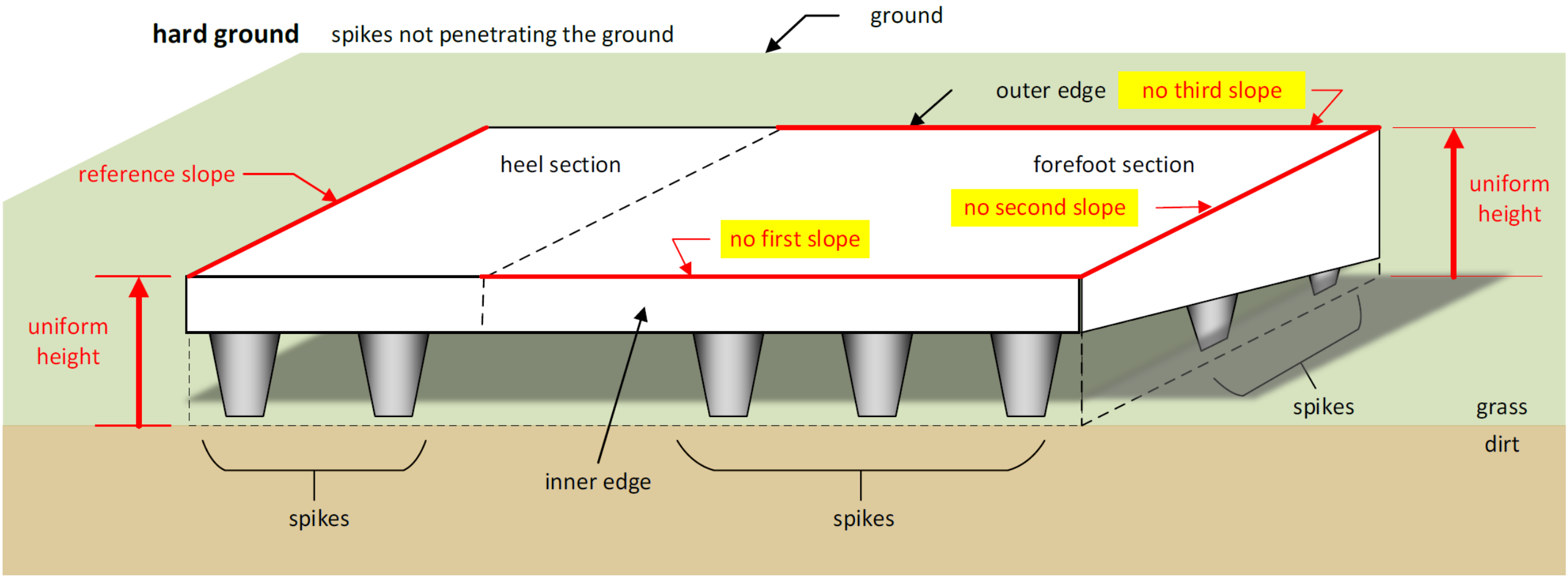

IPR2024-00636: Paper 12, 35-37; EX2008, ¶182

IPR2024-00636 ('786 Patent): No First, Second, or Third Slope – Primary Embodiment

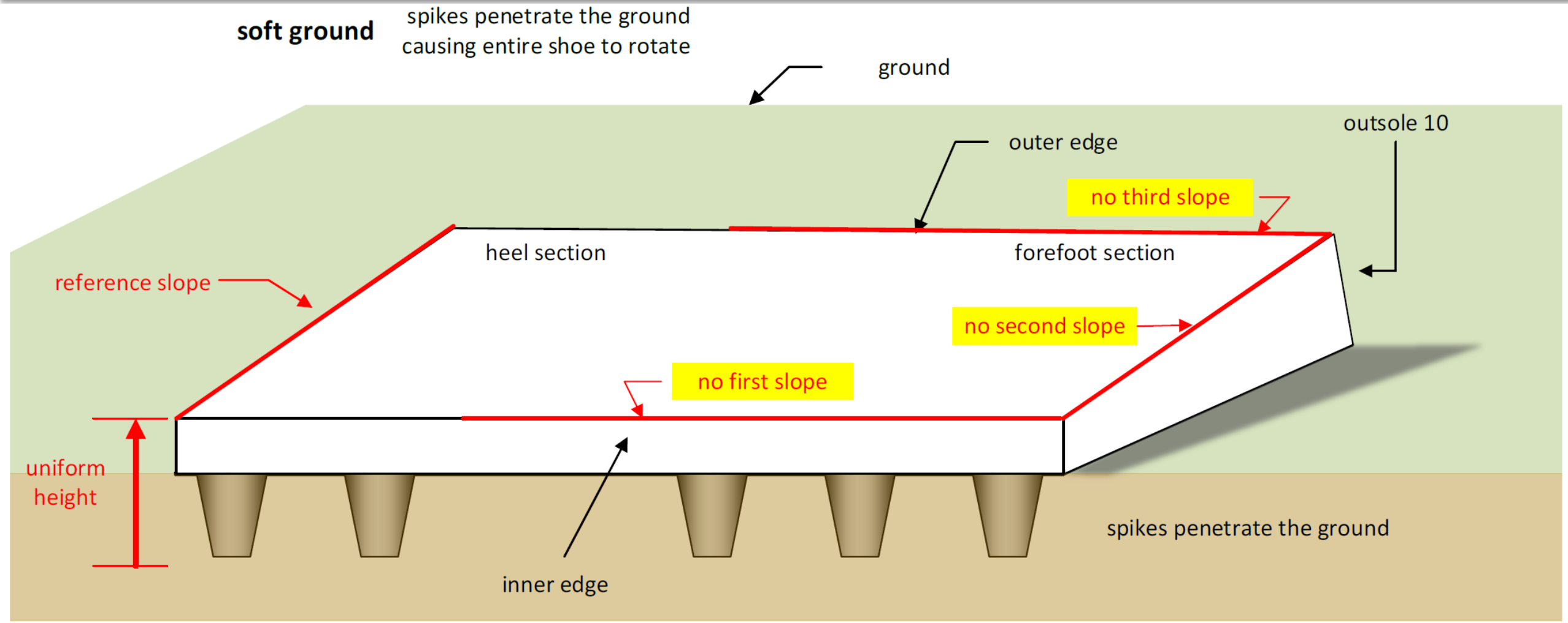

IPR2024-00636: Paper 12, 38; EX2008, ¶189

IPR2024-00636 ('786 Patent): No First, Second, or Third Slope – "What If" Embodiments

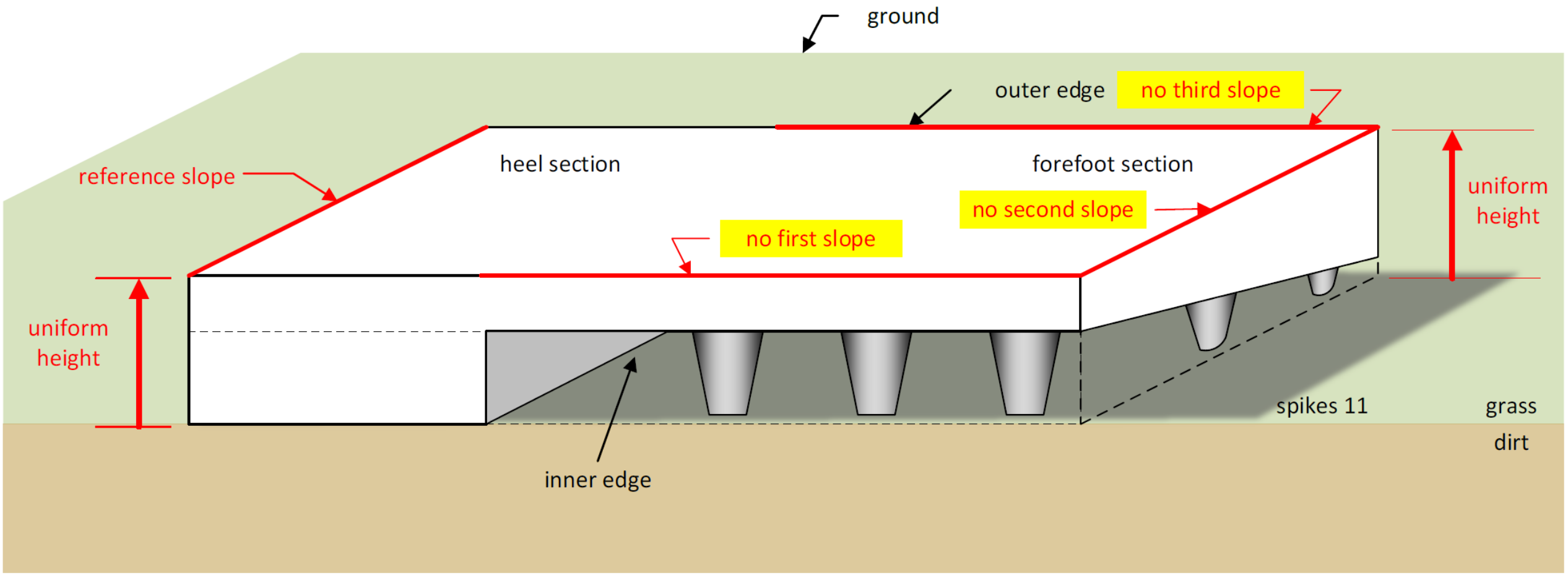

IPR2024-00636: Paper 12, 41-42; EX2008 ¶196

IPR2024-00636 ('786 Patent): No First, Second, or Third Slope – "What If" Embodiments

Kim's "what if" embodiment without spikes as a midsole

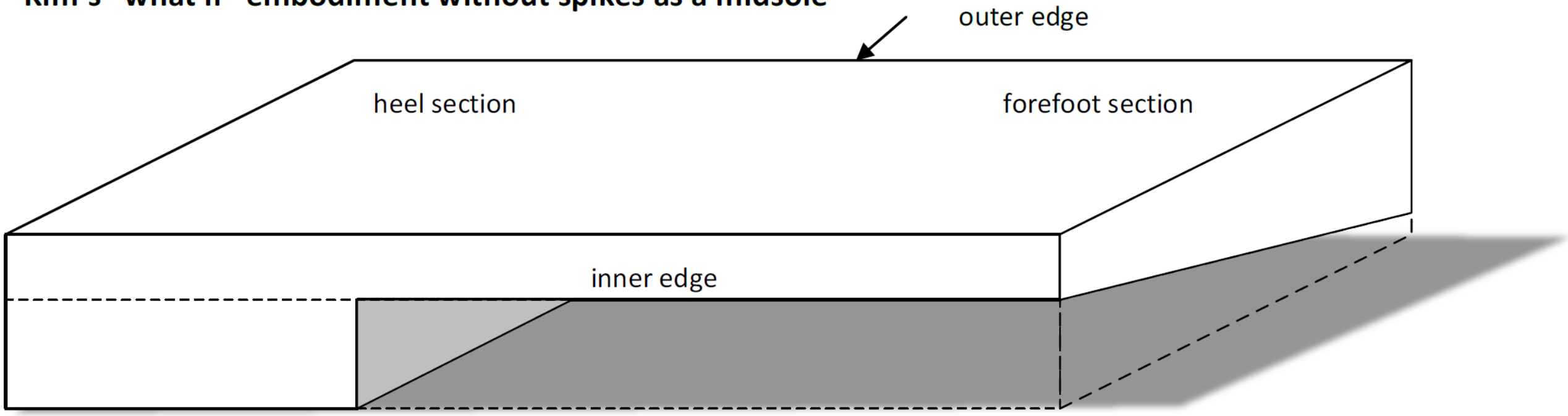

IPR2024-00636: Paper 12, 43; EX2008 ¶212

KIM GROUND

IPR2024-00637 (’291 Patent)

IPR2024-00637 ('291 Patent): No 1st Height > 2nd Height > 3rd Height or Slopes – Primary Embodiment

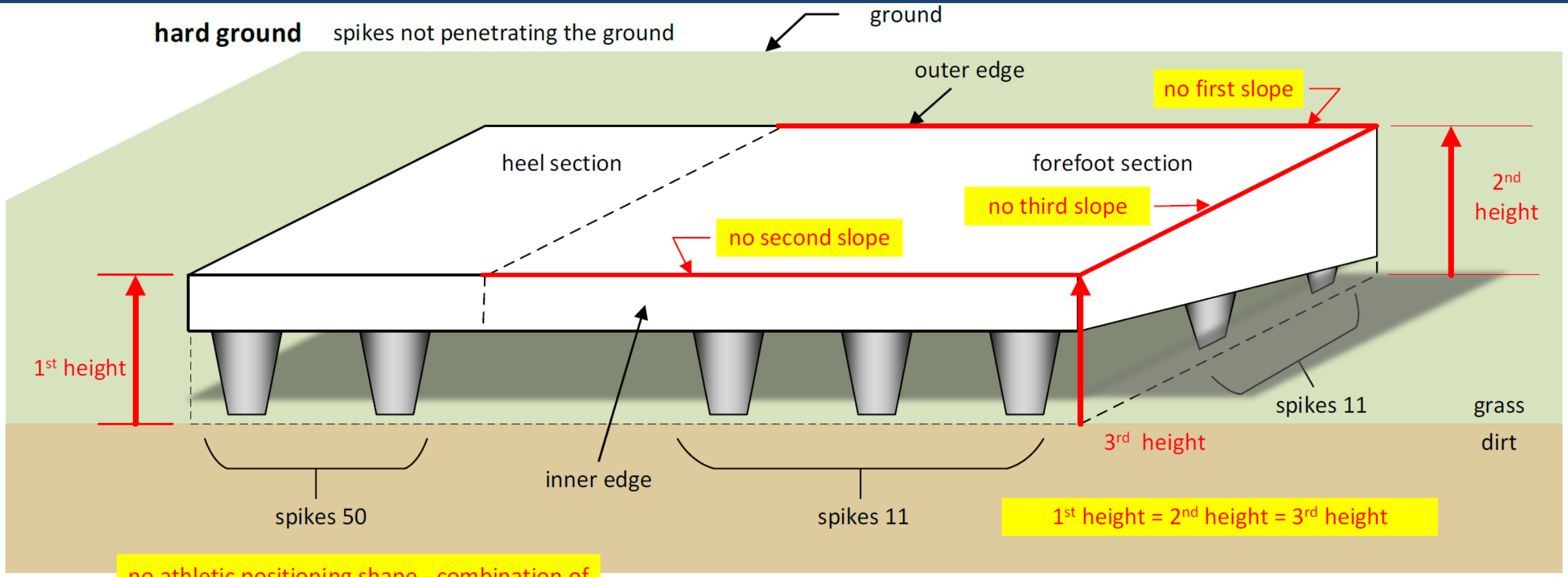

no athletic positioning shape - combination of midsole, insole, and bottom outsole

IPR2024-00637: Paper 12, 34-36; EX2008 ¶189

IPR2024-00637 ('291 Patent): No 1st Height > 2nd Height > 3rd Height or Slopes – Primary Embodiment

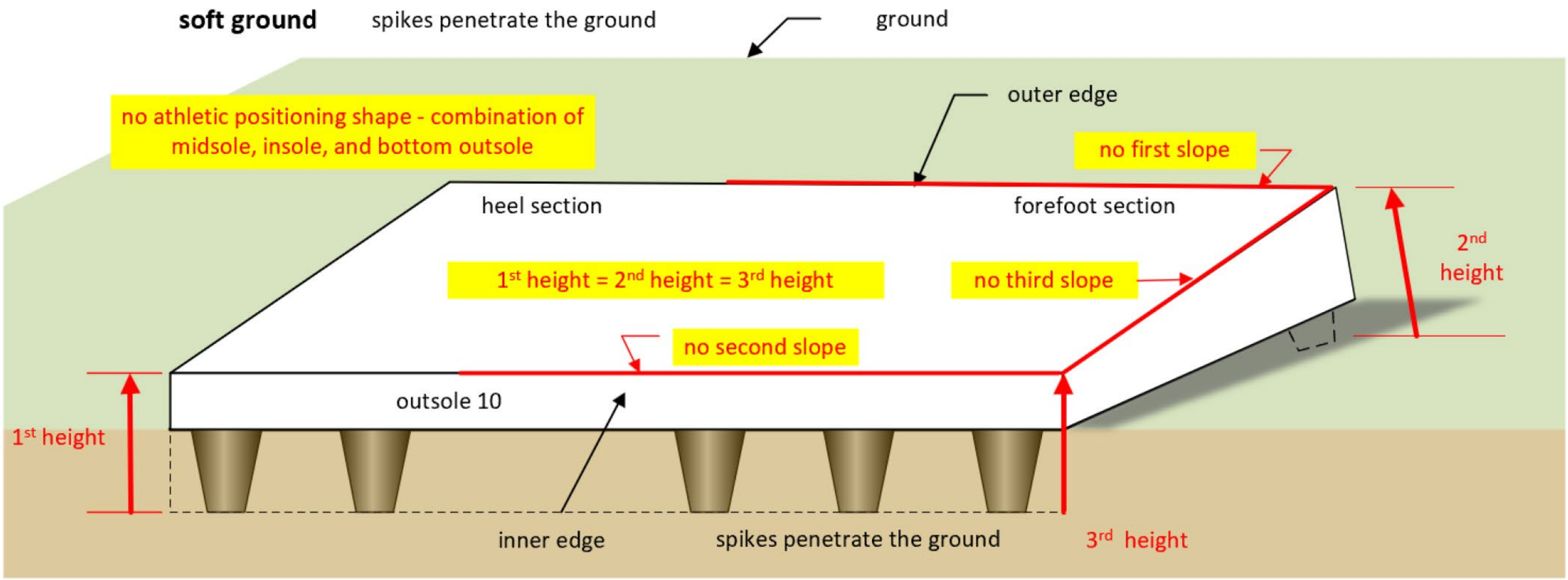

IPR2024-00637: Paper 12, 34-36; EX2008 ¶190

IPR2024-00637 ('291 Patent): No 1st Height > 2nd Height > 3rd Height or Slopes – "What If" Embodiments

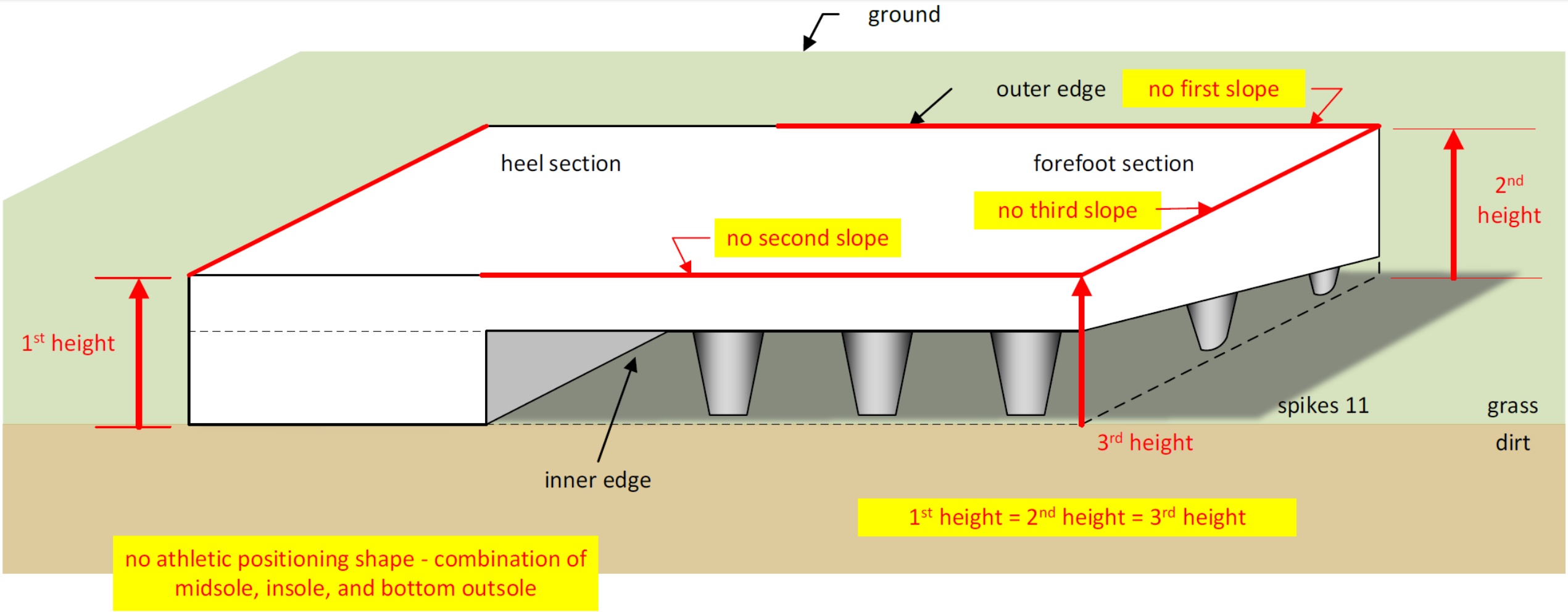

IPR2024-00637: Paper 12, 37-47; EX2008 ¶212

IPR2024-00637 ('291 Patent): No 1st Height > 2nd Height > 3rd Height or Slopes – "What If" Embodiments

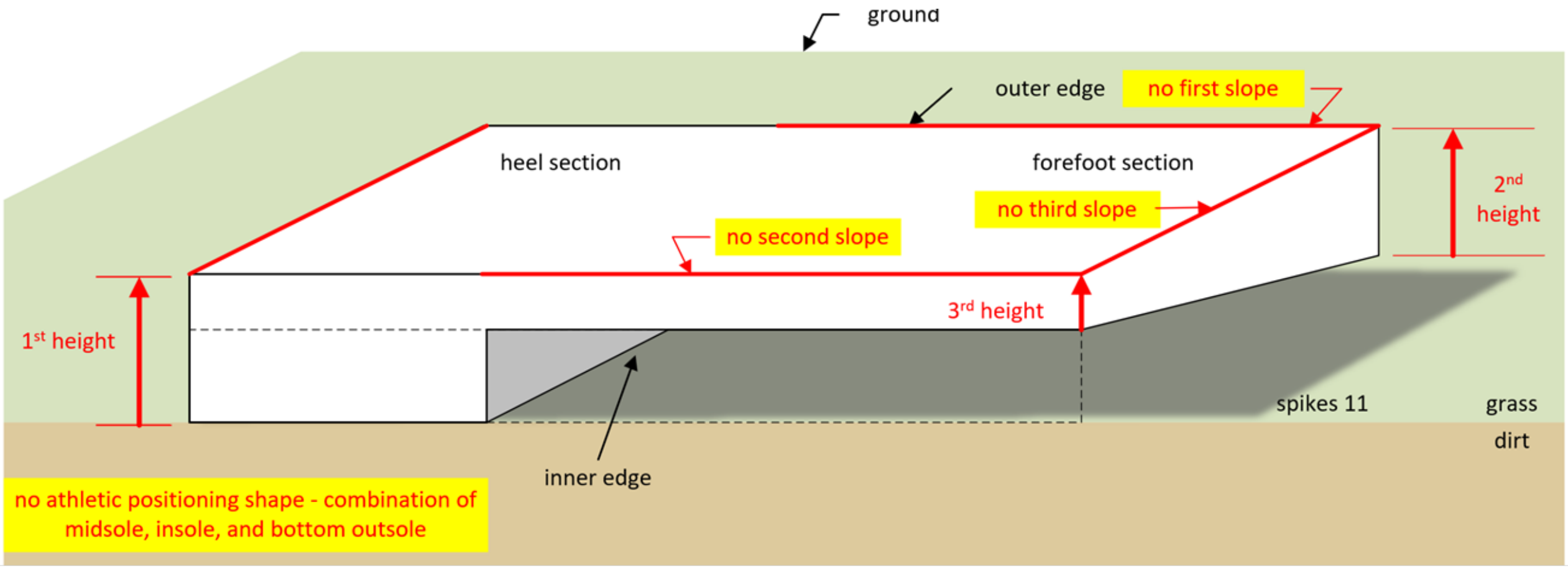

IPR2024-00637: Paper 12, 37-47; EX2008 ¶212

IPR2024-00637 ('291 Patent): No 1st Height > 2nd Height > 3rd Height or Slopes – "What If" Embodiments

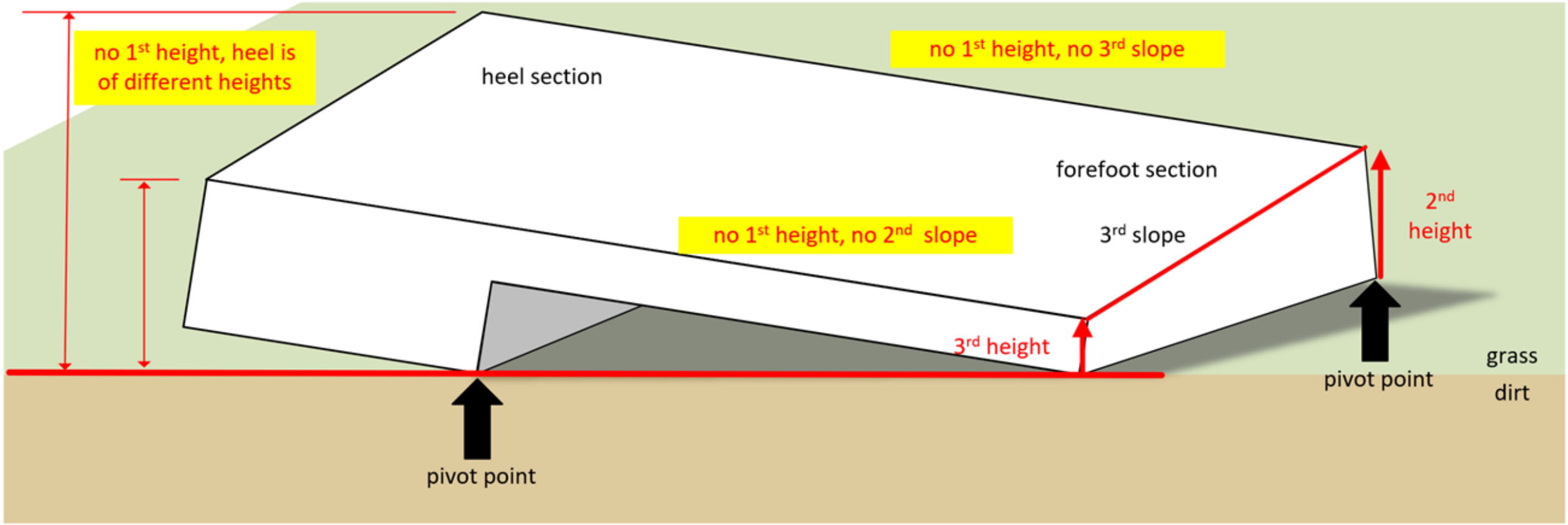

IPR2024-00637: Paper 12, 37-47; EX2008 ¶213

KIM GROUND

IPR2024-00638 (’760 Patent)

IPR2024-00638 ('760 Patent): No Big Toe Area Lower than Heel Area – Primary Embodiment

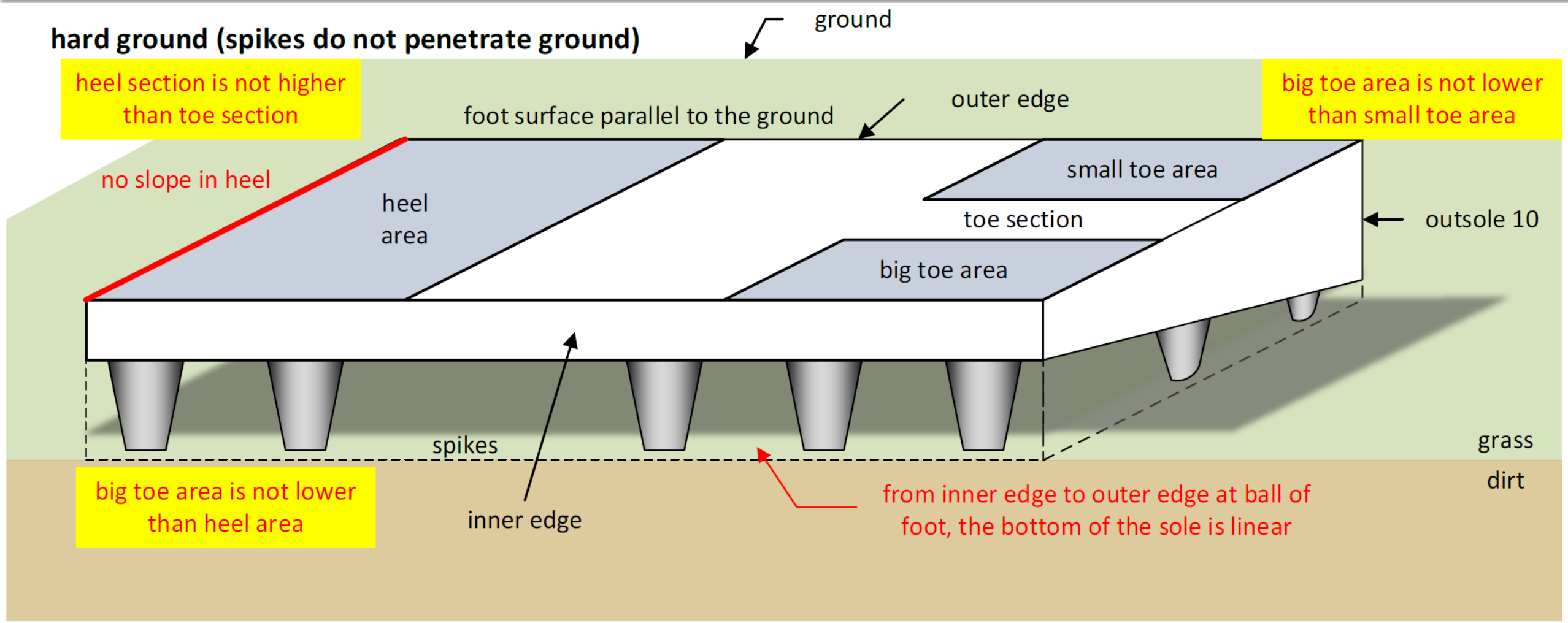

IPR2024-00638: Paper 12, 31-35; EX2008 ¶180

IPR2024-00638 ('760 Patent): No Big Toe Area Lower than Heel Area – Primary Embodiment

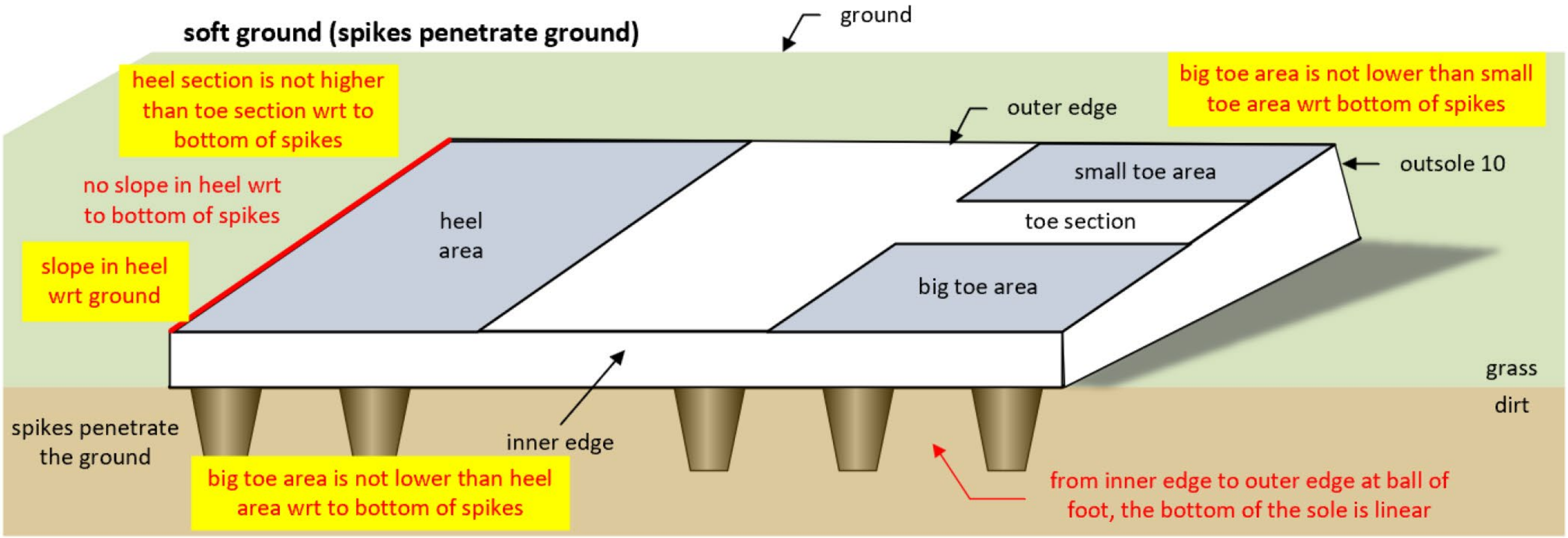

IPR2024-00638: Paper 12, 35-36; EX2008 ¶187

IPR2024-00638 ('760 Patent): No Big Toe Area Lower than Heel Area – "What If" Embodiments

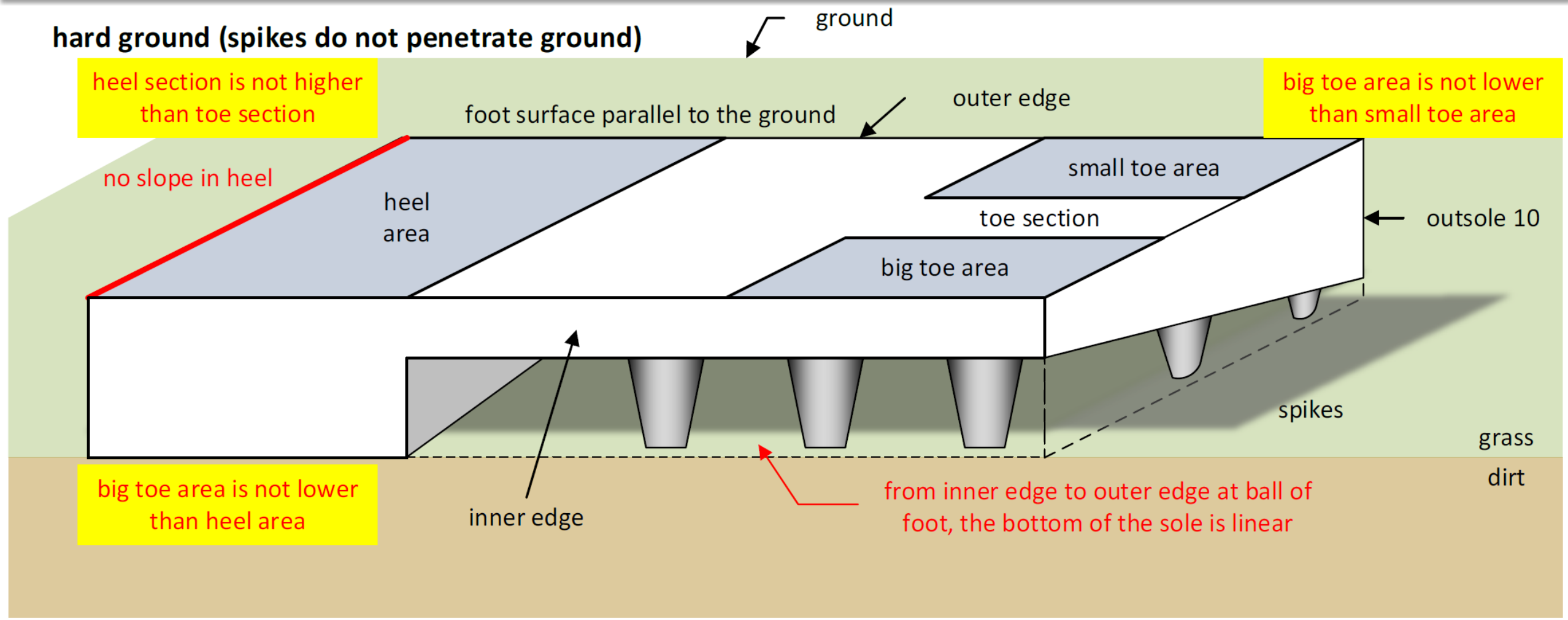

IPR2024-00638: Paper 12, 36-38; EX2008 ¶192

IPR2024-00638 ('760 Patent): No Big Toe Area Lower than Heel Area – "What If" Embodiments

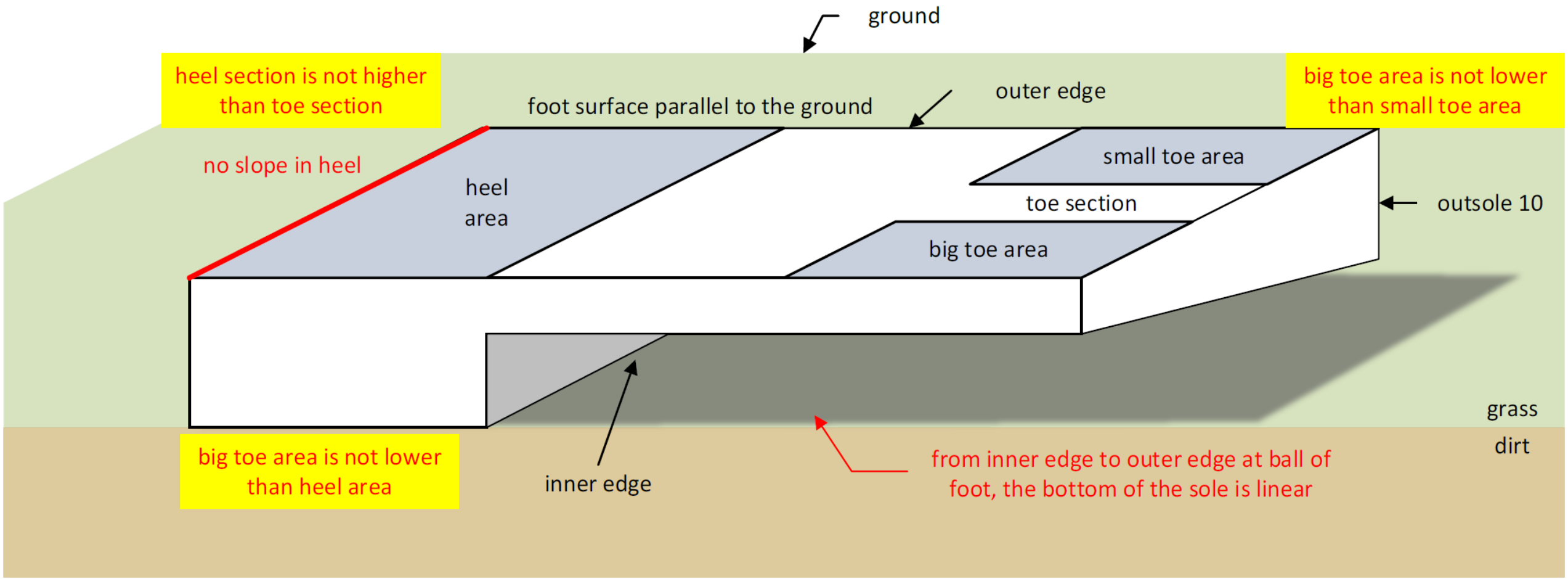

IPR2024-00638: Paper 12, 38; EX2008 ¶195

IPR2024-00638 ('760 Patent): No Big Toe Area Lower than Heel Area – "What If" Embodiments

Kim "what if" w/o spikes wrt 760

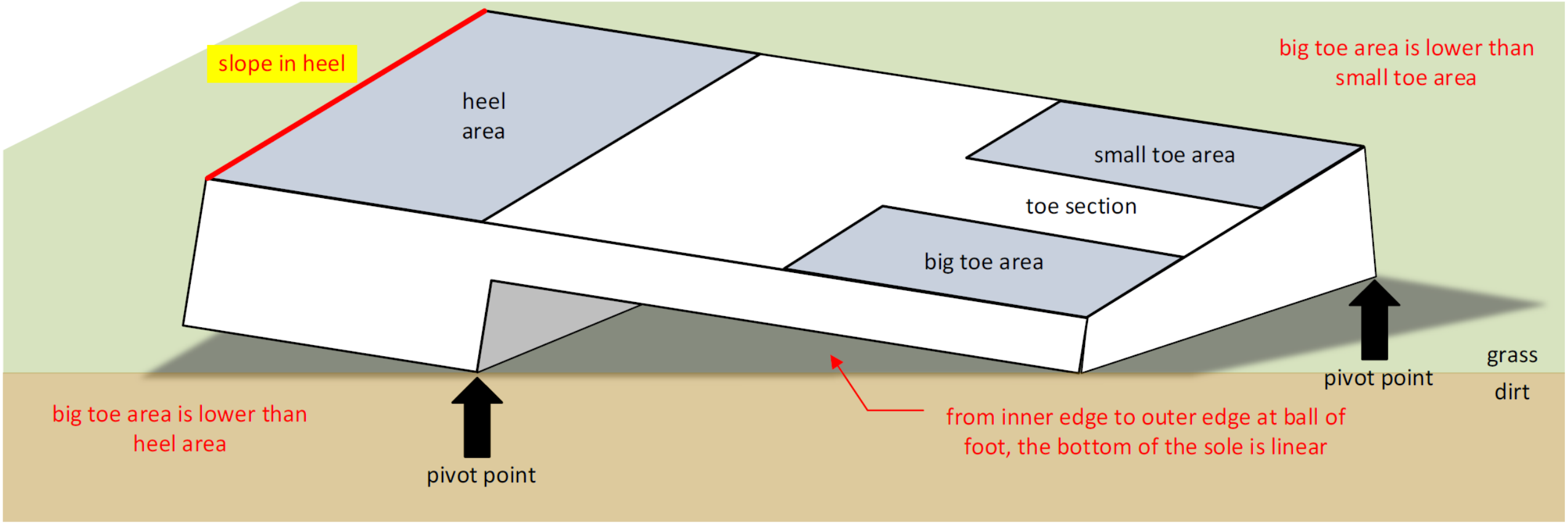

IPR2024-00638: Paper 12, 38; EX2008 ¶197

IPR2024-00638 ('760 Patent): No "Athletic Positioning"

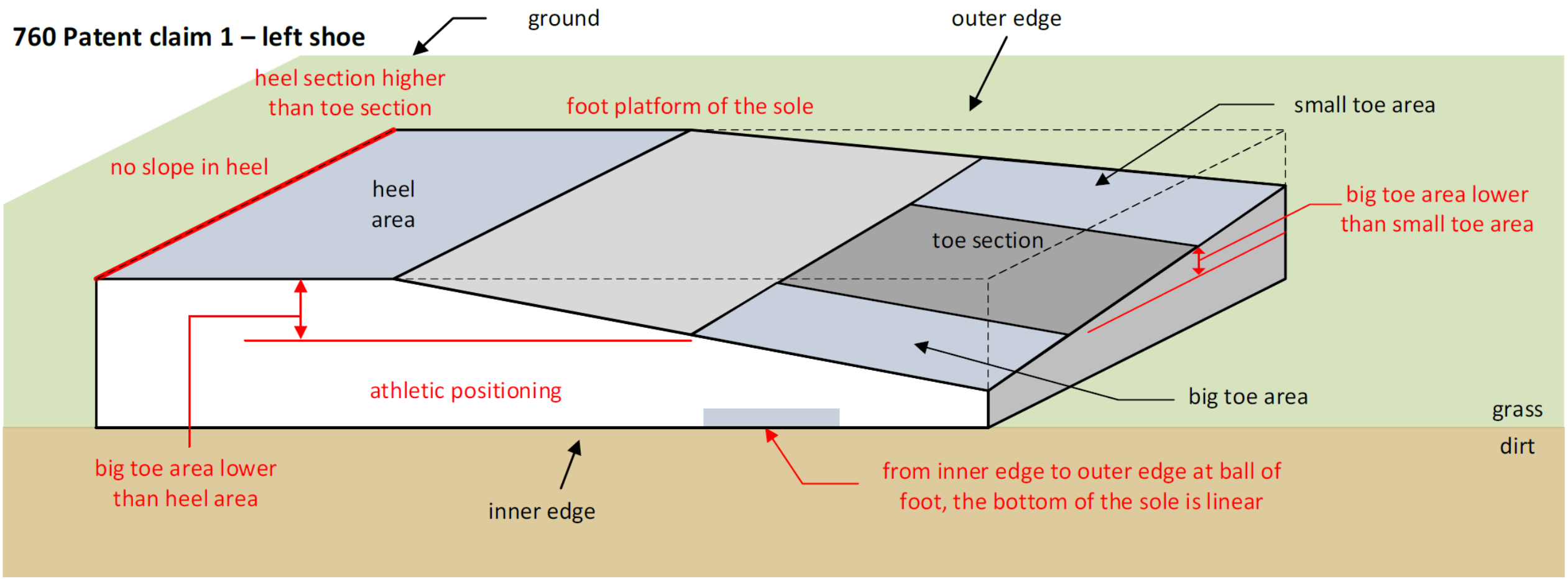

IPR2024-00638: Paper 12, 38-40; EX2008 ¶¶72, 258-267

DUFOUR GROUNDS

DUFOUR GROUND

IPR2024-00636 (’786 Patent)

IPR2024-00636 ('786 Patent): No Reference, First, or Third Slope in Fig. 9 Embodiment

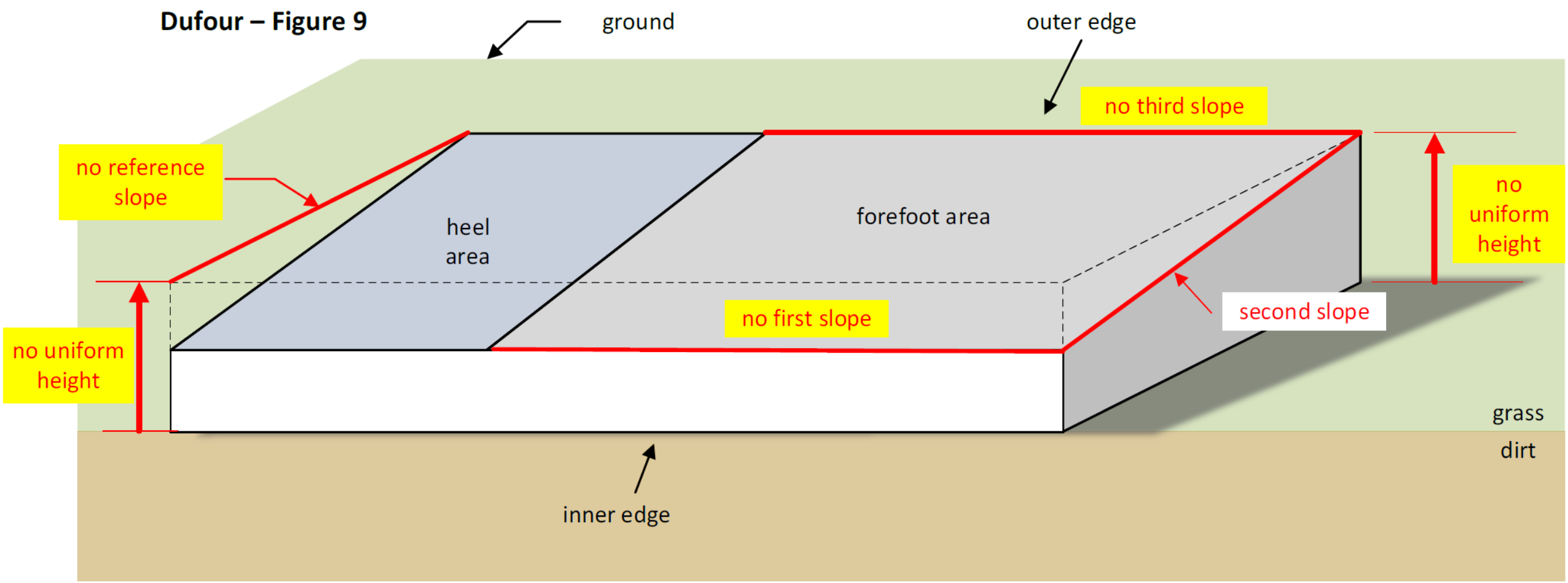

IPR2024-00636: Paper 12, 44-46; EX2008 ¶227

IPR2024-00636 ('786 Patent): No Third Slope in Fig. 12 Embodiment

Dufour – Figures 11 and 12

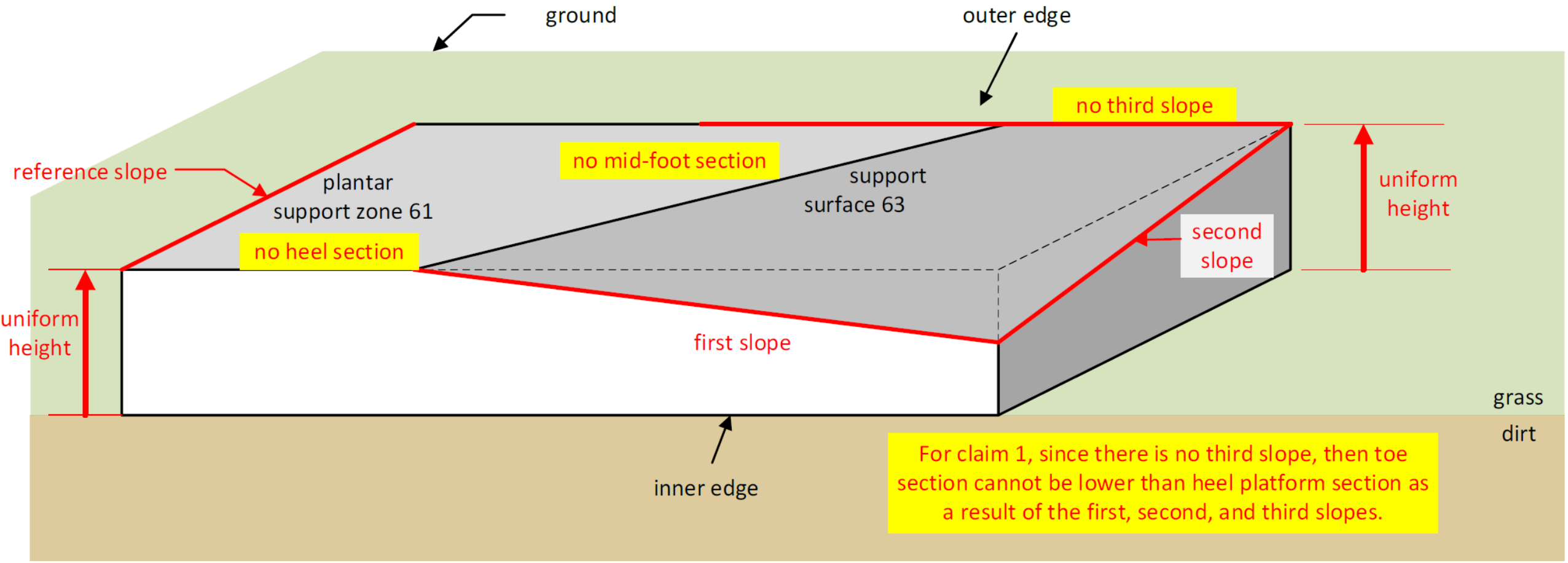

IPR2024-00636: Paper 12, 46-48; EX2008 ¶232

IPR2024-00636 ('786 Patent): No Mid-Foot and Toe Sections Forming Angled Support Platform

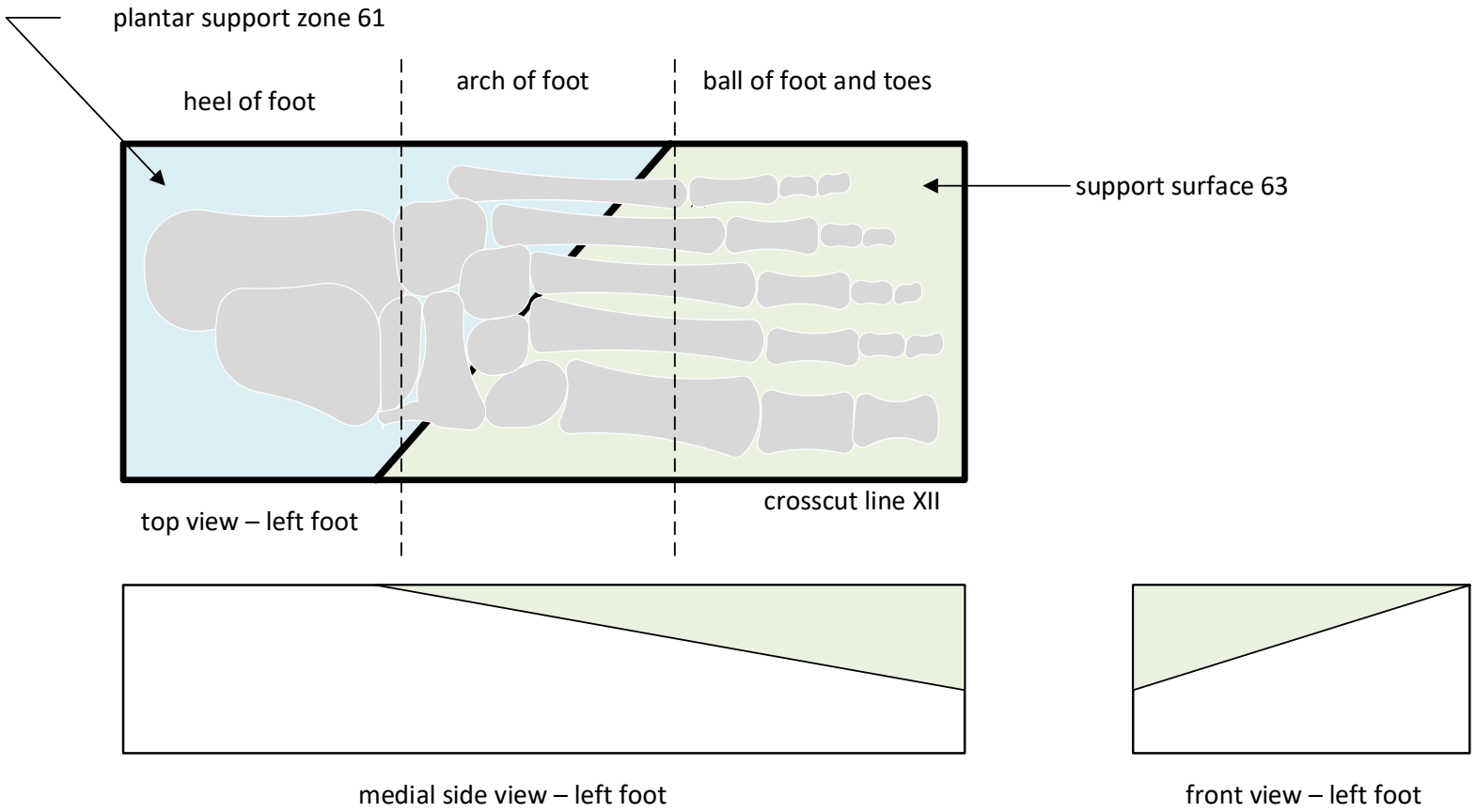

IPR2024-00636: Paper 12, 46-48; EX2008 ¶240

IPR2024-00636 ('786 Patent): No Mid-Foot and Toe Sections Forming Angled Support Platform

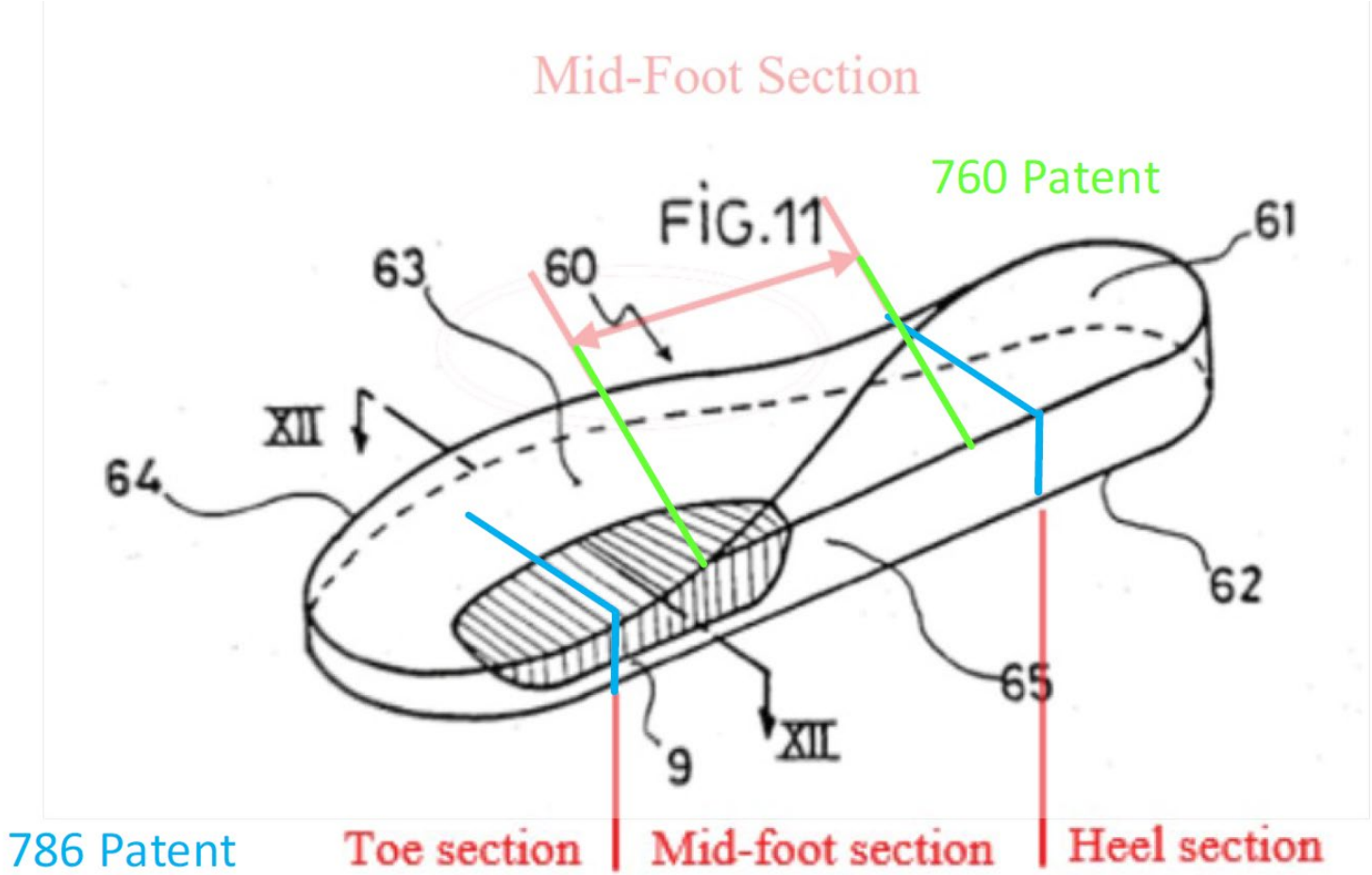

IPR2024-00636: Paper 12, 49-54; EX2008 ¶256

DUFOUR GROUND

IPR2024-00637 (’291 Patent)

IPR2024-00637 ('291 Patent): No 1st Height, 1st Height > 2nd Height, or 1st/2nd Slope in Fig. 9 Embodiment

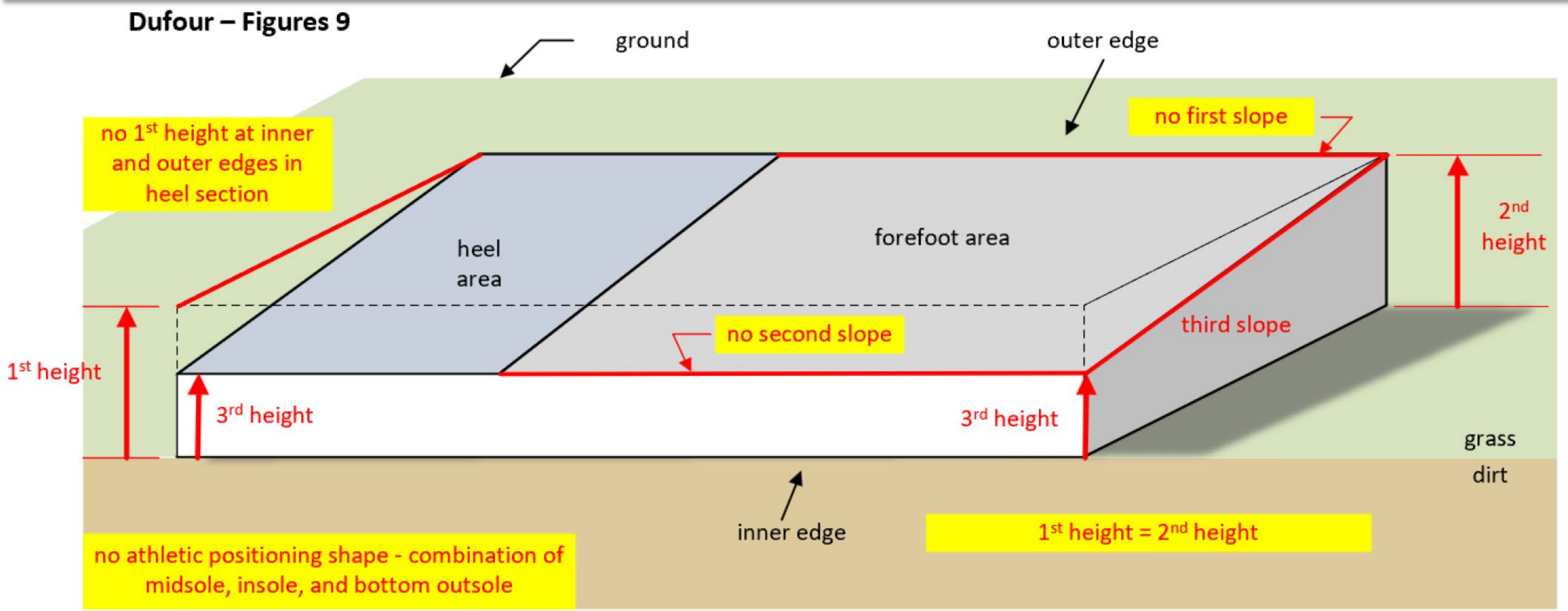

IPR2024-00637: Paper 12, 48-51; EX2008 ¶235

IPR2024-00637 ('291 Patent): No 1st Height > 2nd Height or 1st Slope in Fig. 12 Embodiment

Dufour – Figures 11 and 12

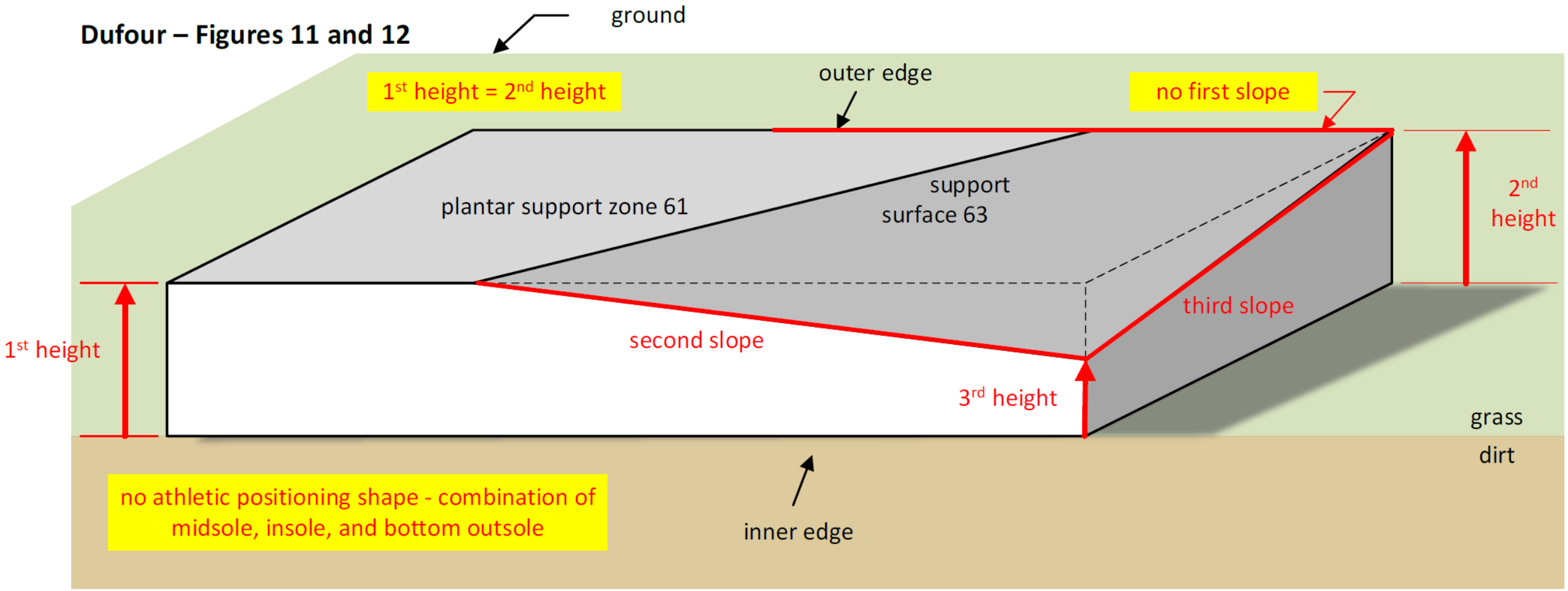

IPR2024-00637: Paper 12, 51-54; EX2008 ¶239

IPR2024-00637 ('291 Patent): Petitioner Failed to Prove Motivation to Combine Dufour and Kim

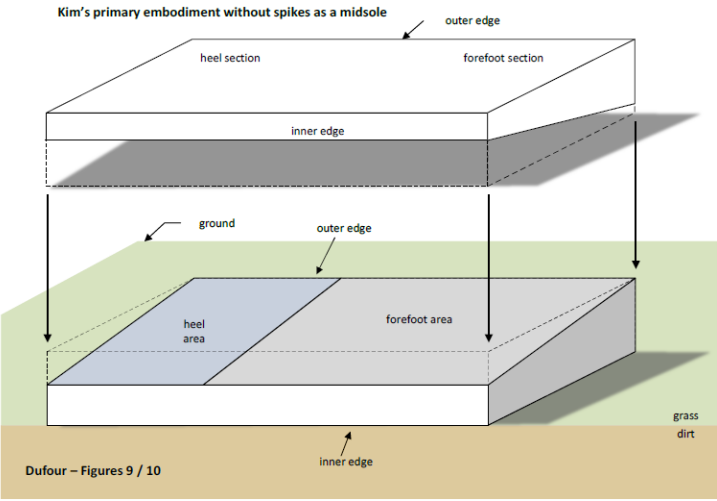

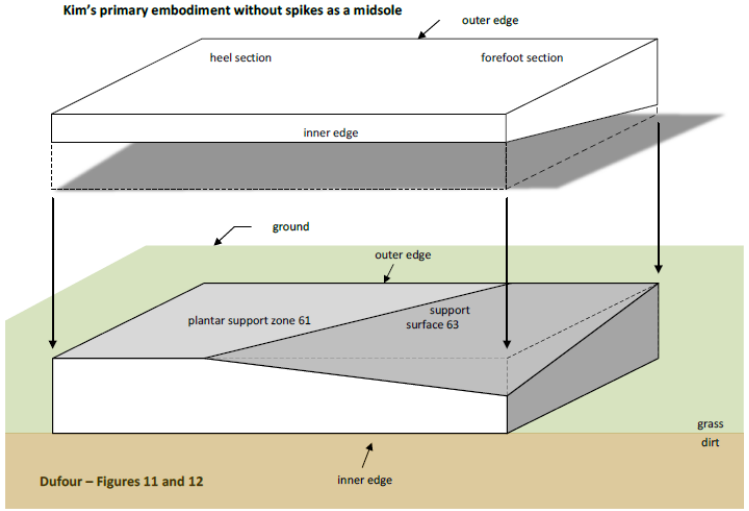

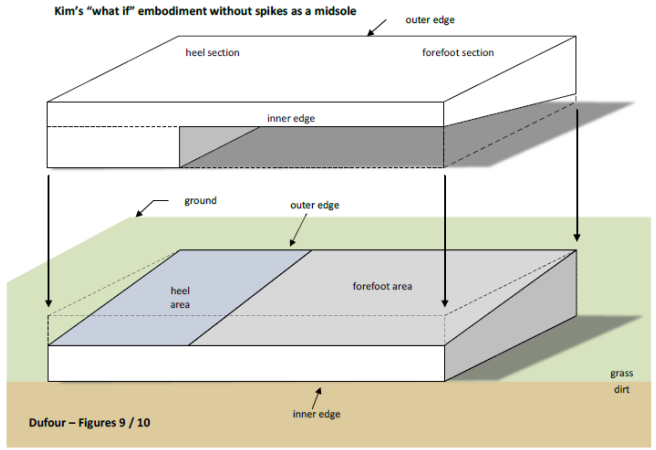

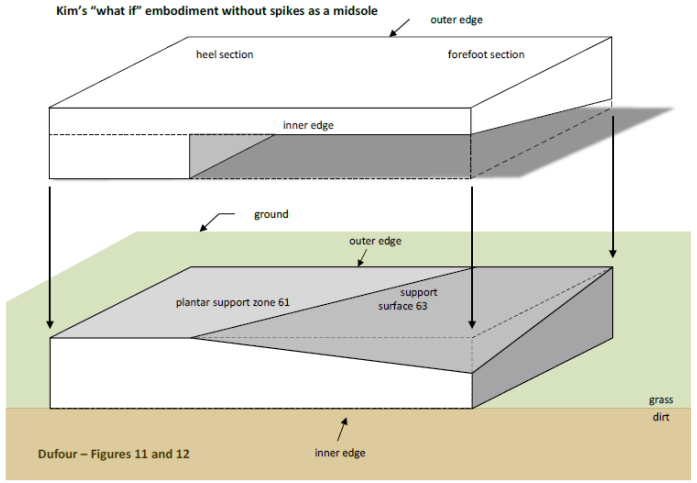

IPR2024-00637: Paper 12, 55-60; EX2008 ¶¶263-270

DUFOUR GROUND

IPR2024-00638 (’760 Patent)

IPR2024-00638 ('760 Patent): No "Athletic Positioning" – Fig. 9 Embodiment

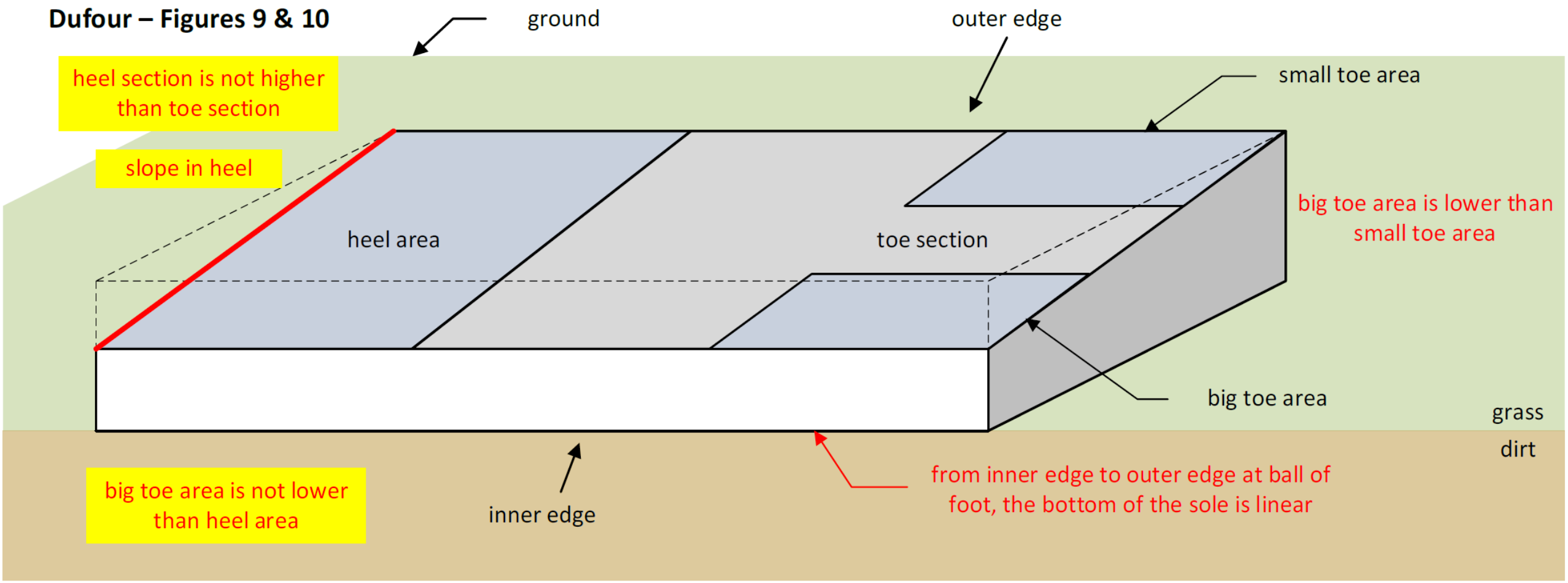

IPR2024-00638: Paper 12, 41-43; EX2008 ¶213

IPR2024-00638 ('760 Patent): No "Athletic Positioning" – Fig. 12 Embodiment

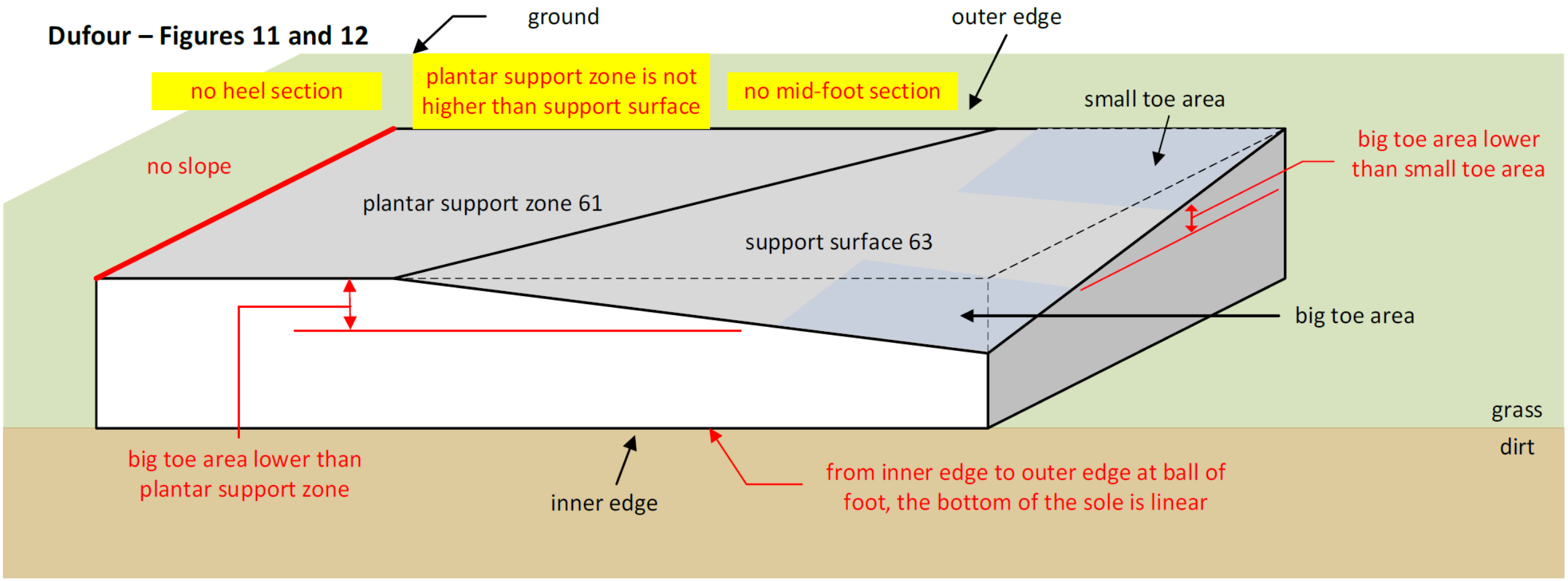

IPR2024-00638: Paper 12, 43-44; EX2008 ¶218

IPR2024-00638 ('760 Patent): No "Pair of Shoes"

Claim 1: "A ***pair of shoes*** comprises: a ***left foot shoe*** . . . and a ***right foot shoe***":

United States Patent [19]
Dufour

[11] **Patent Number: 4,754,561**
[45] **Date of Patent: Jul. 5, 1988**

[54] **GOLF SHOE**

[56] **References Cited**

GOLF SHOE

FIELD OF THE INVENTION

This invention pertains to golf shoes, and especially a shoe sole able to facilitate the rolling of the foot (the left foot for a left-handed person; the right for a right-handed person) during the golfer's swing movement; the term "swing" indicates the kinematics of the golfer's compound movements in order to hit the ball.

SUMMARY OF THE INVENTION

This invention proposes a golf shoe which provides excellent comfort for the foot, especially during the swing, and allows a rolling of the foot on the outer edge of the sole which has no adverse effects on the sound contact with the ground during the movement. Generally, a left shoe, thus a shoe for right-handed golfers, which represent 90% of the players, will be discussed.

IPR2024-00638: EX1006; Paper 12, 45-48; EX2008 ¶¶235-236

IPR2024-00638 ('760 Patent): No Mid-Foot Section to Transition from Heel to Toe Section

this line is the transistion between sections 61 and 63

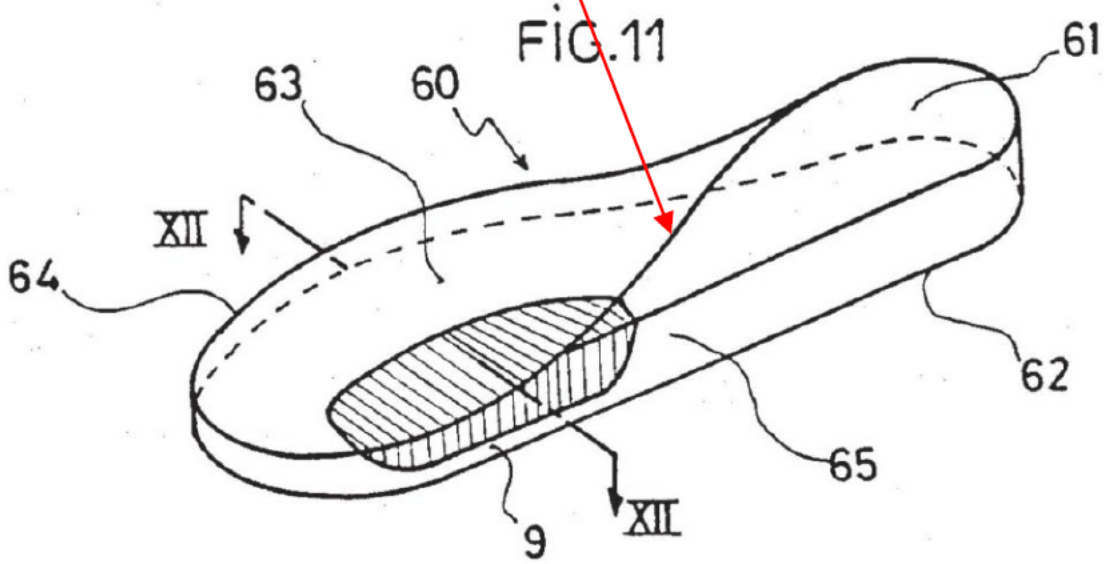

60 – sole
61 – plantar support zone
62 – walking surface 62
63 – support surface
64 – inner edge
65 – outer edge
9 – tapering of active zone (crossed hatched section)

IPR2024-00638: Paper 12, 48-52; EX2008 ¶242

RUBIN GROUNDS

RUBIN GROUND

IPR2024-00636 ('786 Patent)

IPR2024-00636 ('786 Patent): No First, Second, or Third Slope – Primary Embodiment

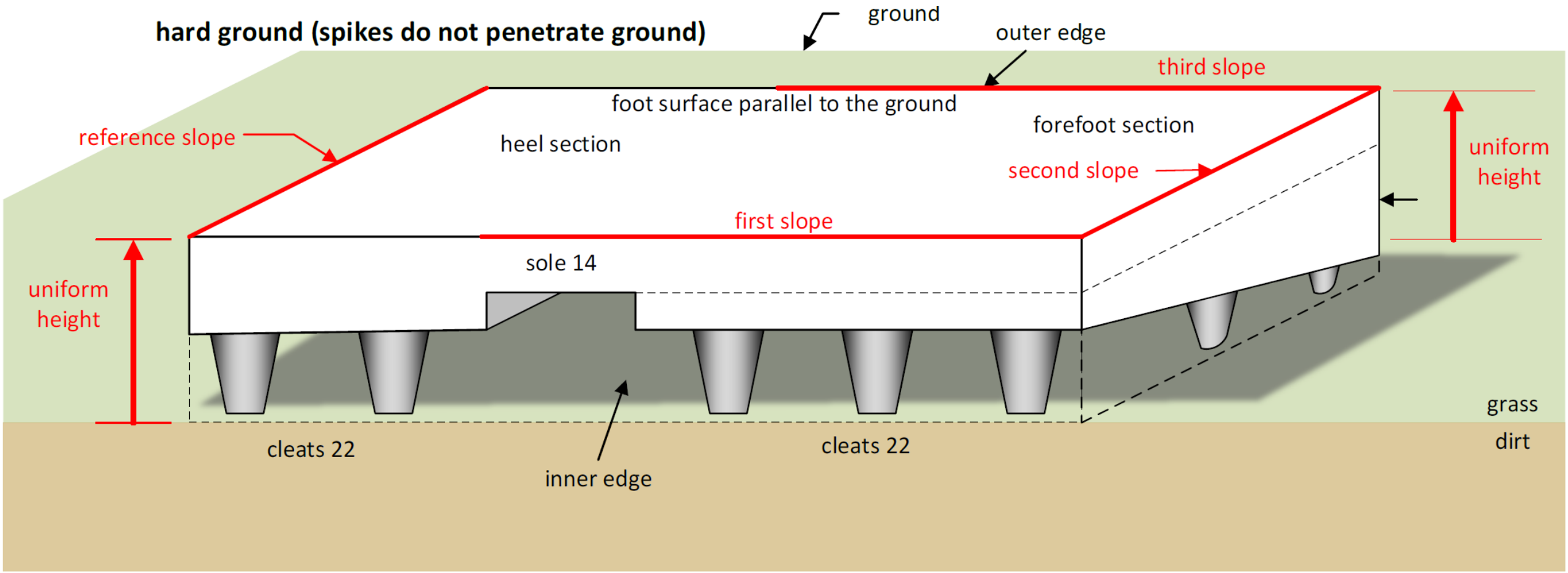

IPR2024-00636: Paper 12, 55-60; EX2008 ¶279

IPR2024-00636 ('786 Patent): No First, Second, or Third Slope – Primary Embodiment

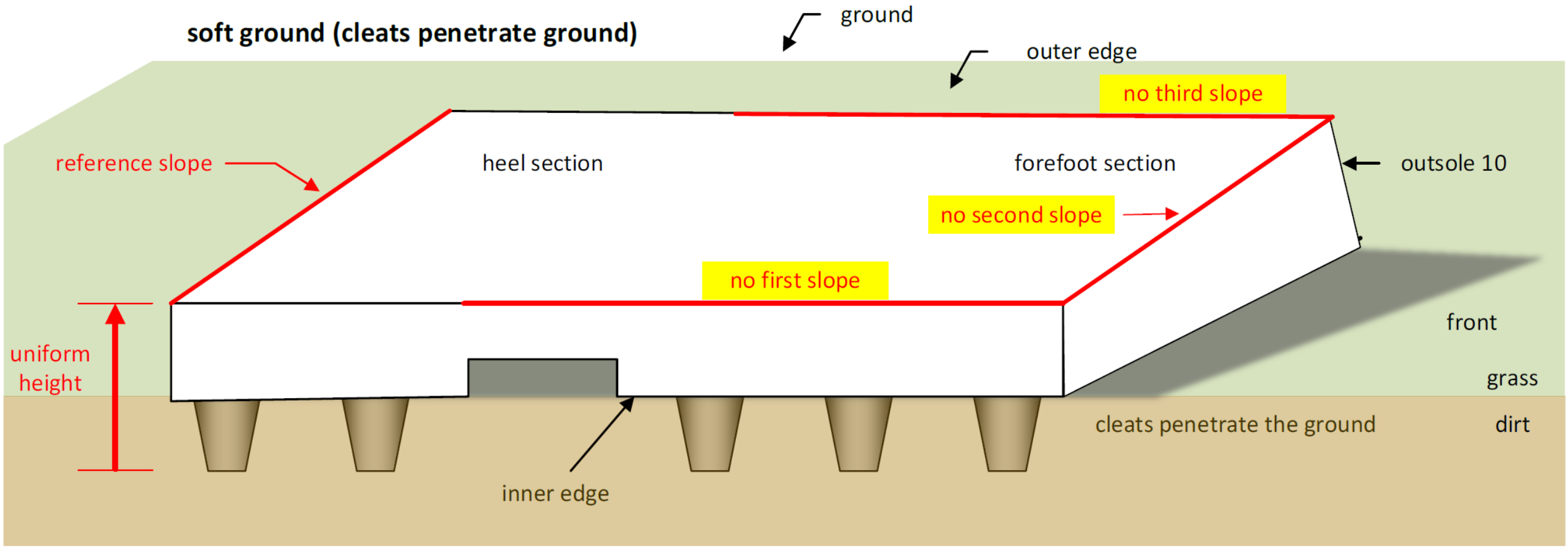

IPR2024-00636: Paper 12, 60-62; EX2008 ¶286

IPR2024-00636 ('786 Patent): No First, Second, or Third Slope – "What If" Embodiments

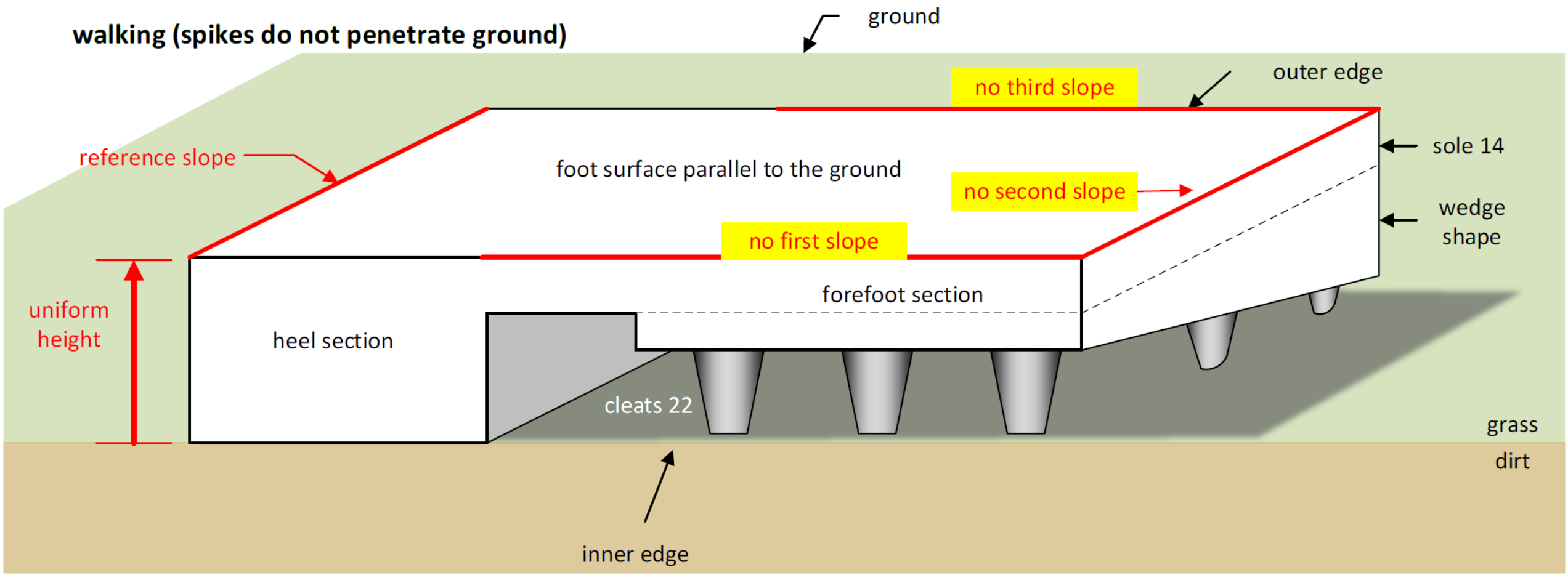

IPR2024-00636: Paper 12, 62-65; EX2008 ¶293

IPR2024-00636 ('786 Patent): No First, Second, or Third Slope – "What If" Embodiments

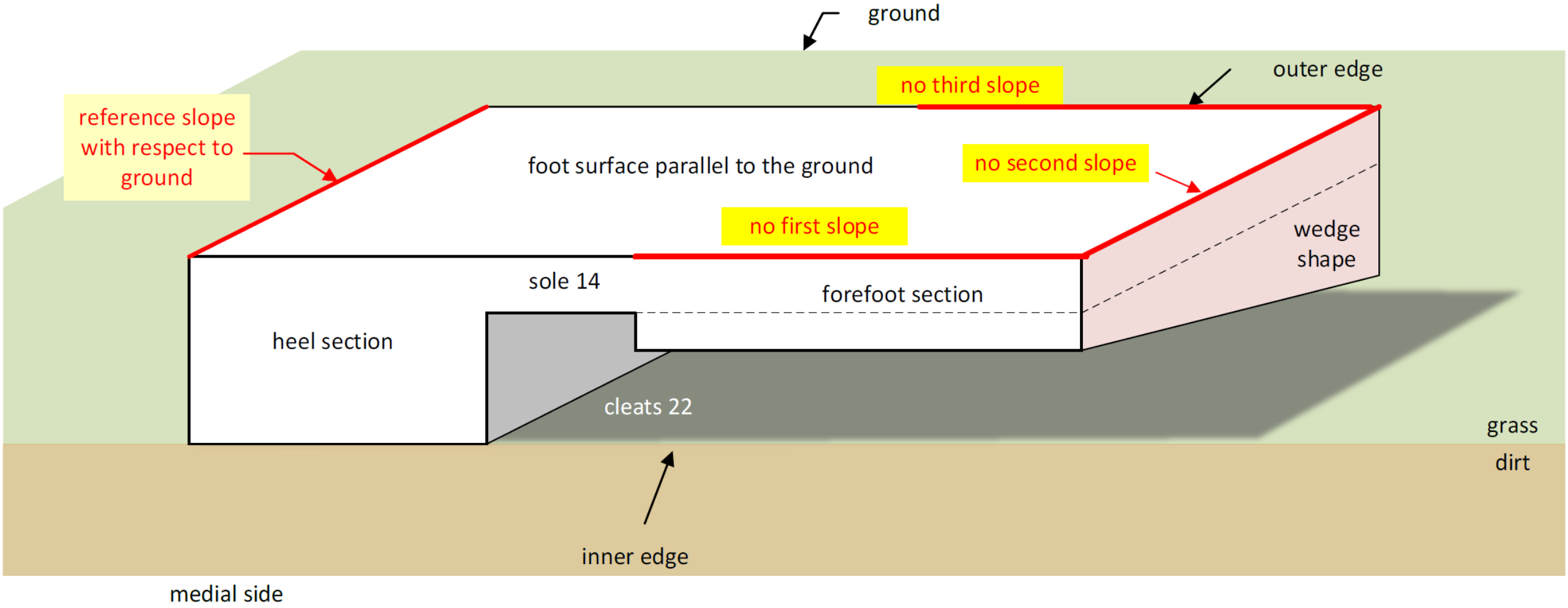

IPR2024-00636: Paper 12, 62-65; EX2008 ¶311

IPR2024-00636 ('786 Patent): No Reference Slope Parallel to the Bottom Surface

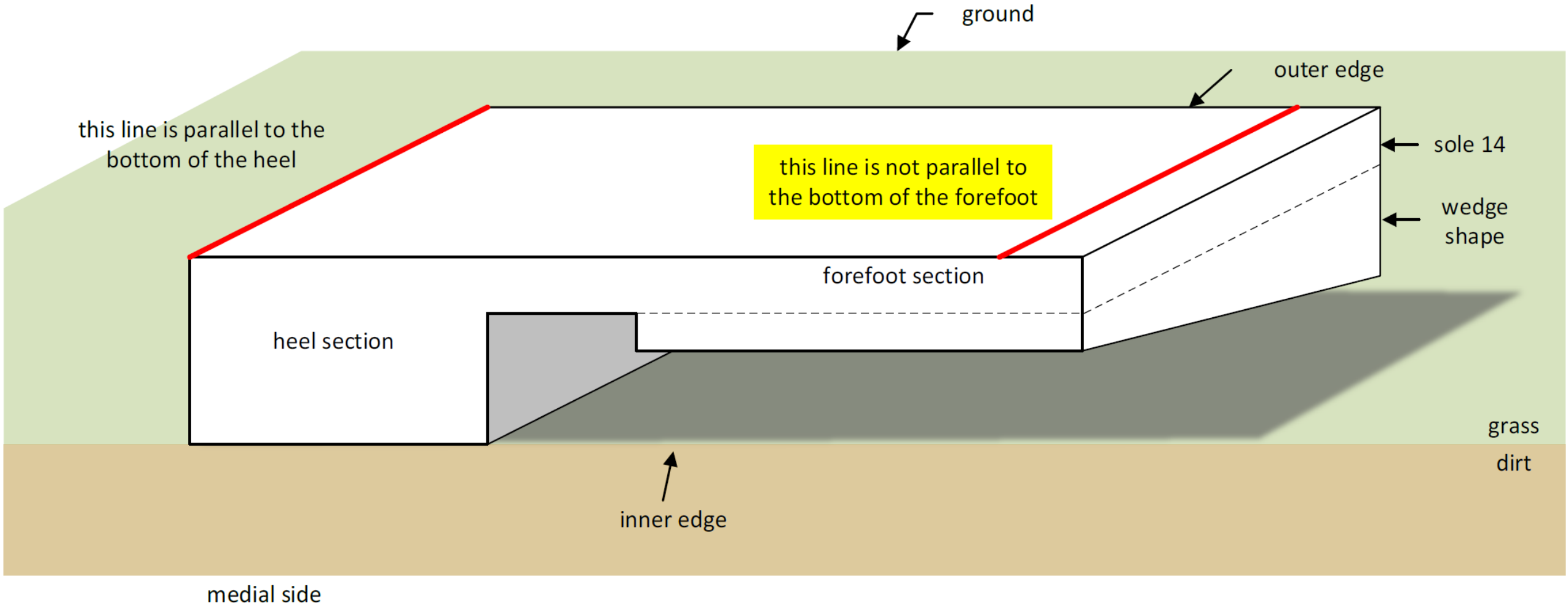

IPR2024-00636: Paper 12, 64; EX2008 ¶305

RUBIN GROUND

IPR2024-00637 (’291 Patent)

IPR2024-00637 ('291 Patent): No 2nd Height > 3rd Height – Primary Embodiment

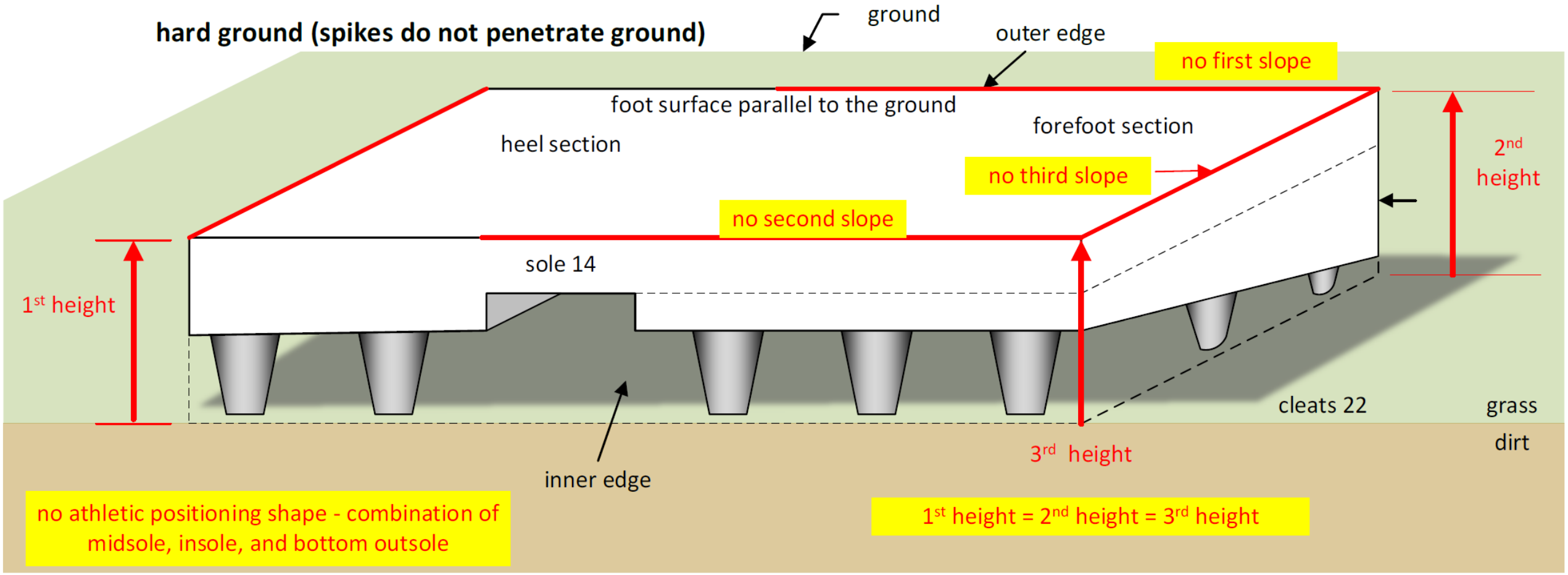

IPR2024-00637: Paper 12, 61-65; EX2008 ¶293

IPR2024-00637 ('291 Patent): No 2nd Height > 3rd Height – Primary Embodiment

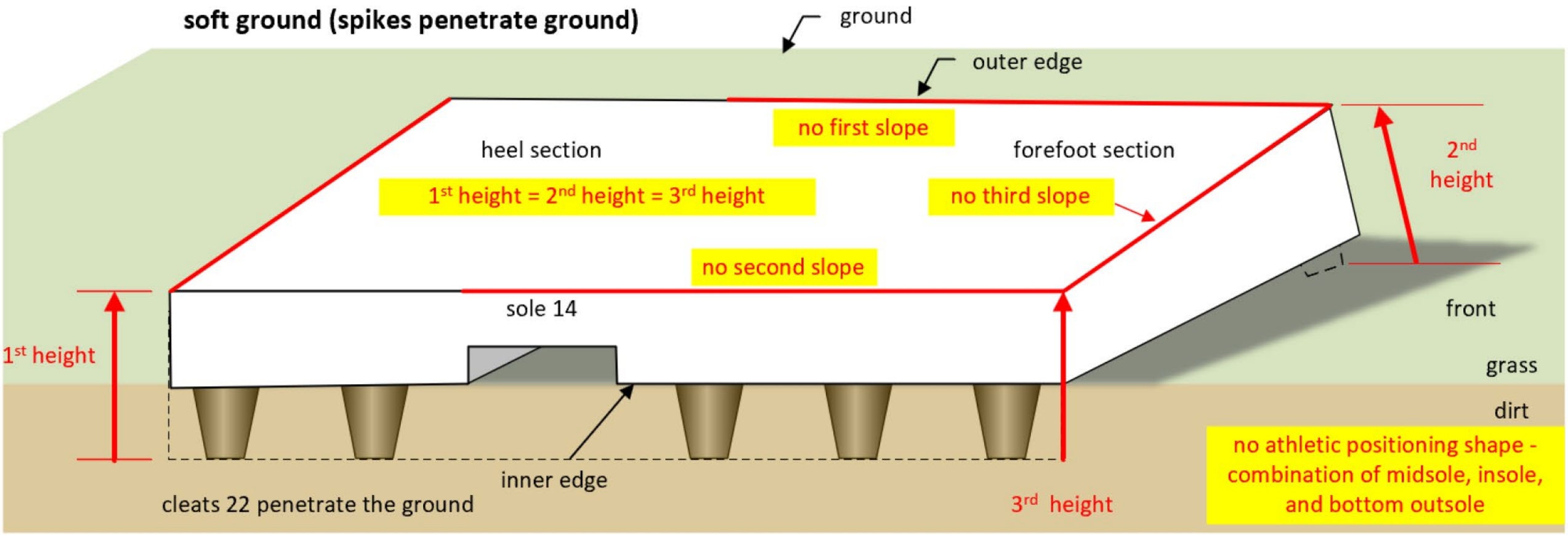

IPR2024-00637: Paper 12, 65-66; EX2008 ¶295

IPR2024-00637 ('291 Patent): No 2nd Height > 3rd Height – "What If" Embodiment

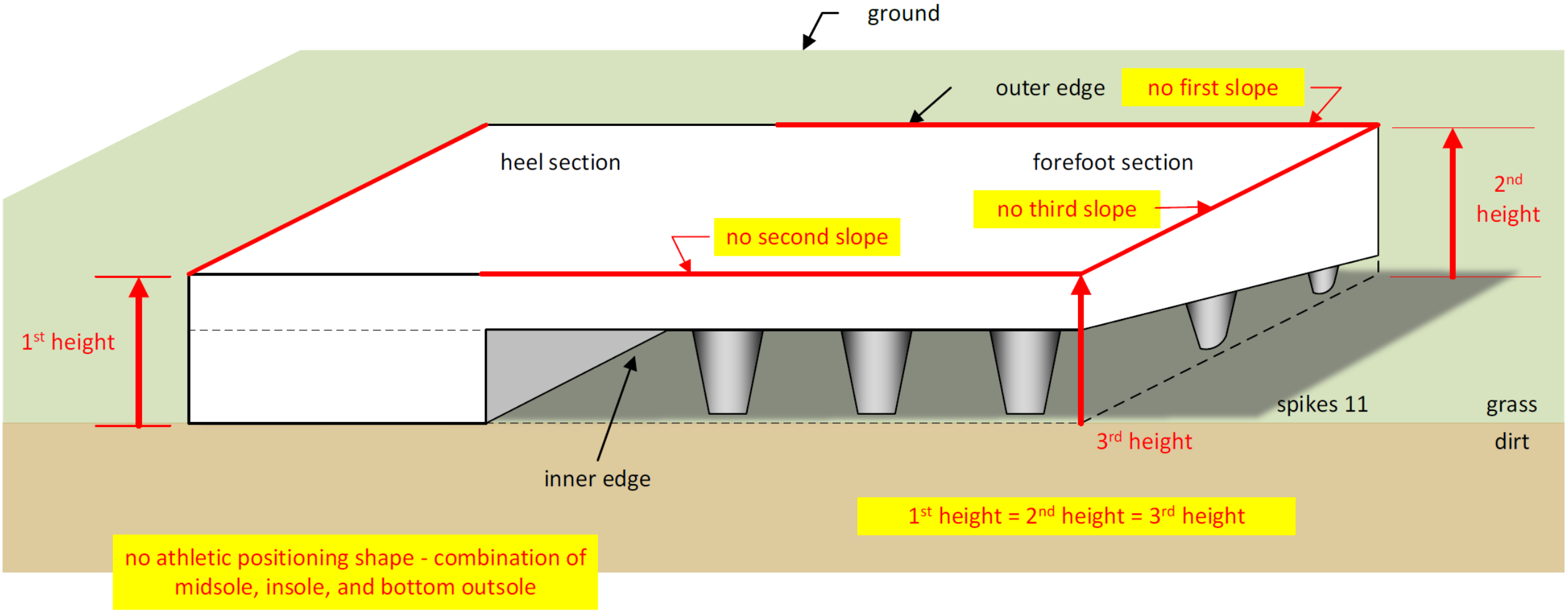

IPR2024-00637: Paper 12, 66-67; EX2008 ¶296

IPR2024-00637 ('291 Patent): No 1st Height > 2nd Height

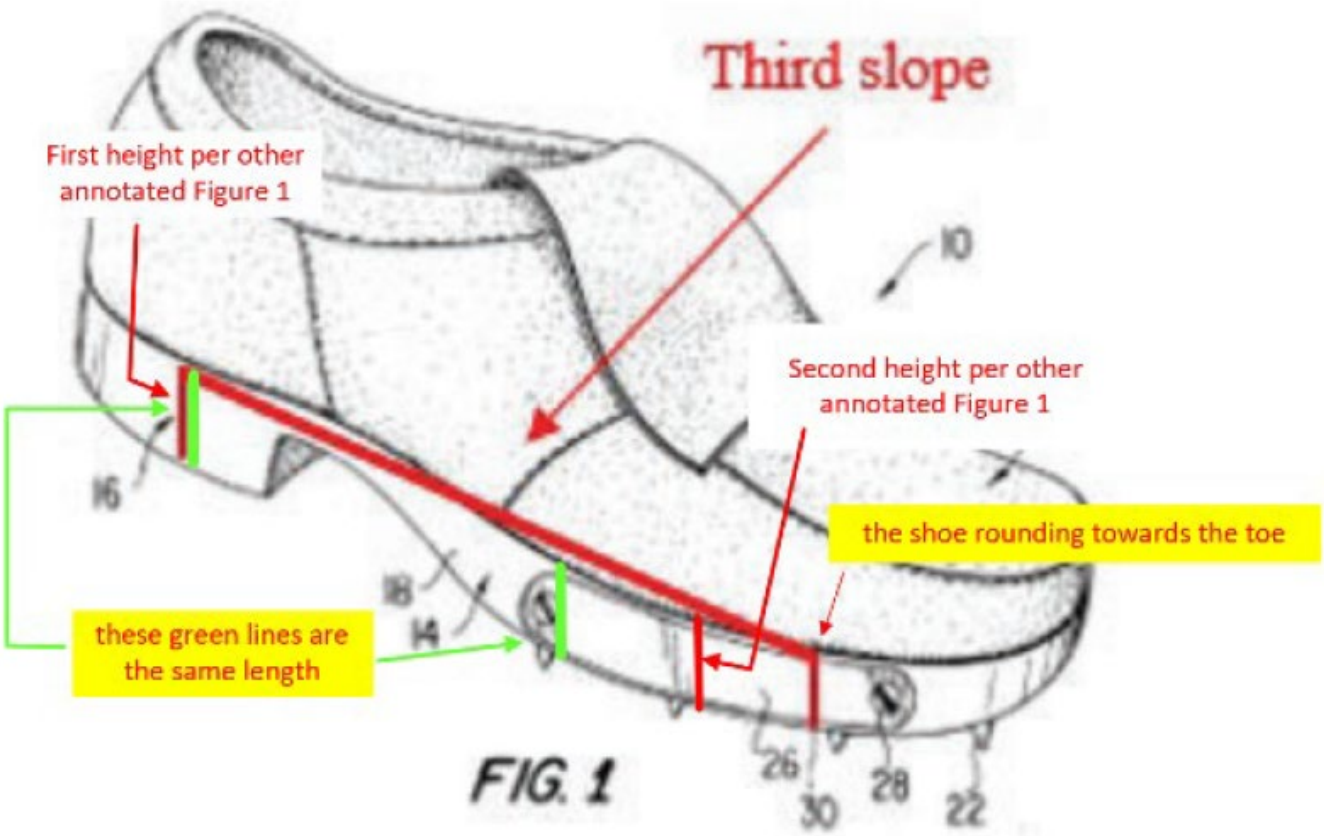

IPR2024-00637: Paper 12, 67-73; EX2008 ¶300

IPR2024-00637 ('291 Patent): Petitioner Failed to Prove Motivation to Combine Rubin and Kim

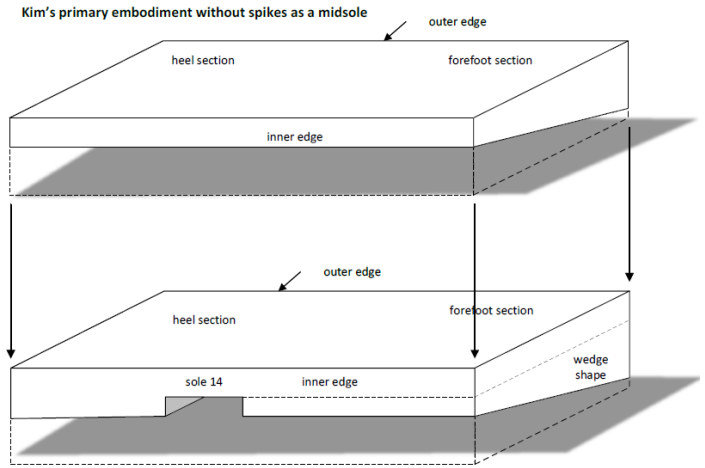

Rubin primary embodiment without cleats

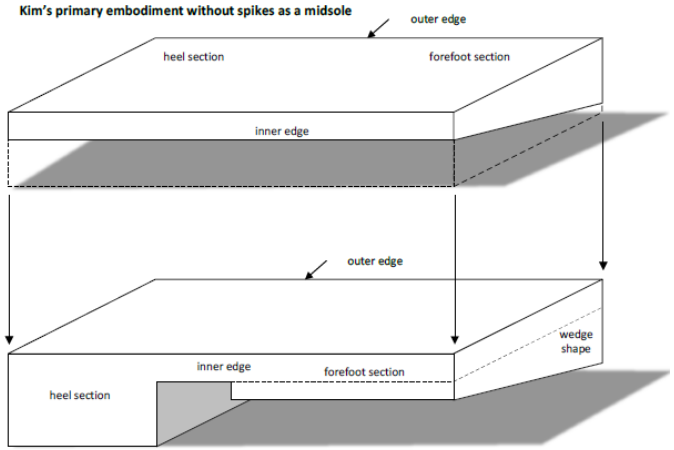

Rubin "what if" embodiment without cleats

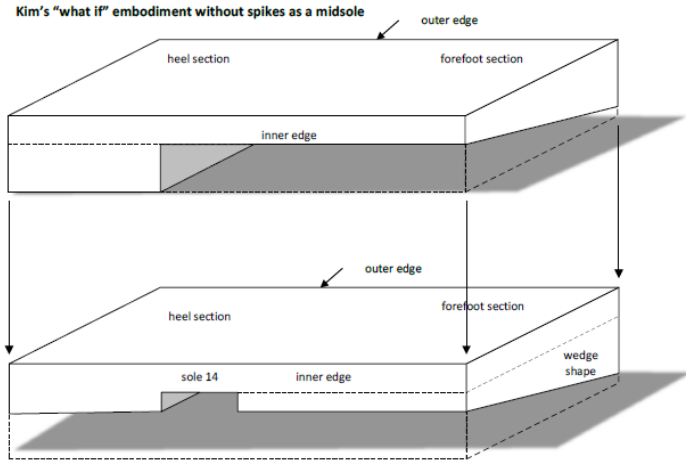

Rubin primary embodiment without cleats

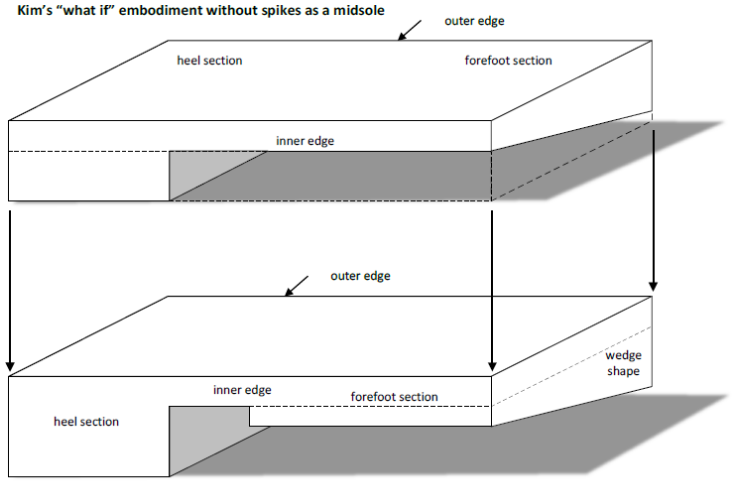

Rubin "what if" embodiment without cleats

IPR2024-00637: Paper 12, 73-77; EX2008 ¶¶317-334

RUBIN GROUND

IPR2024-00638 ('760 Patent)

IPR2024-00638 ('760 Patent): No Big Toe Area Lower than Heel Area – Primary Embodiment

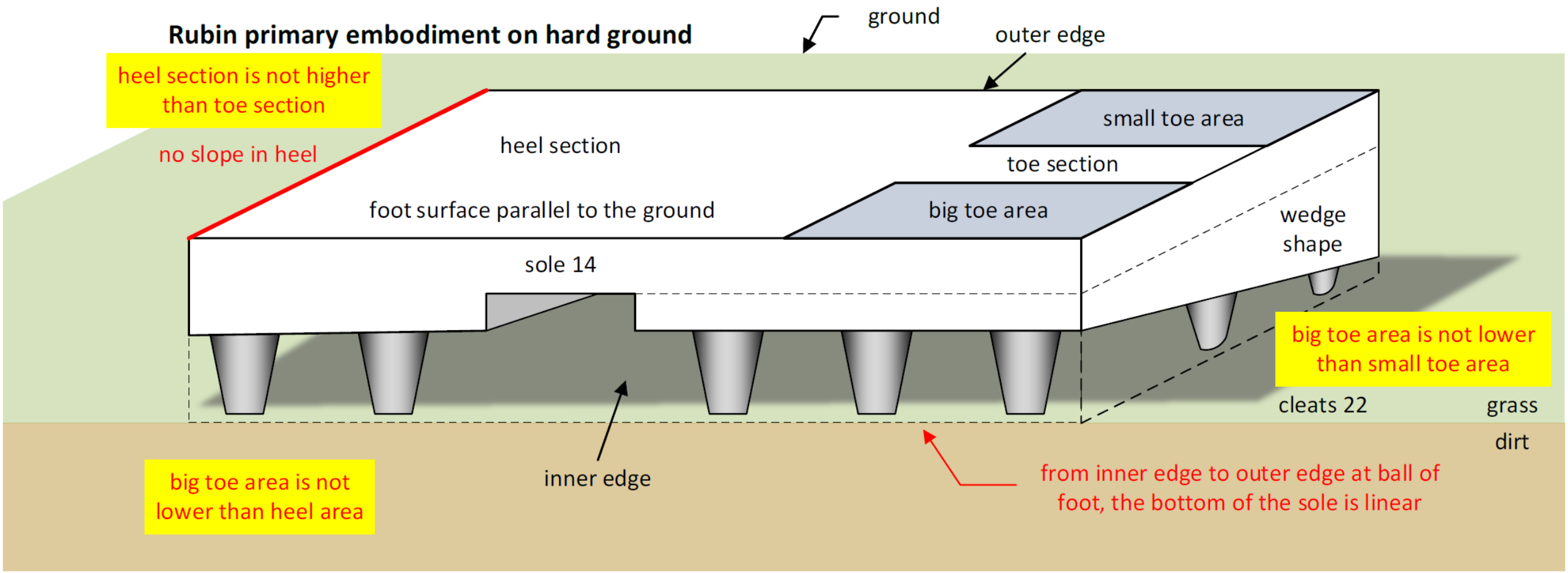

IPR2024-00638: Paper 12, 53-58; EX2008 ¶258

IPR2024-00638 ('760 Patent): No Big Toe Area Lower than Heel Area – Primary Embodiment

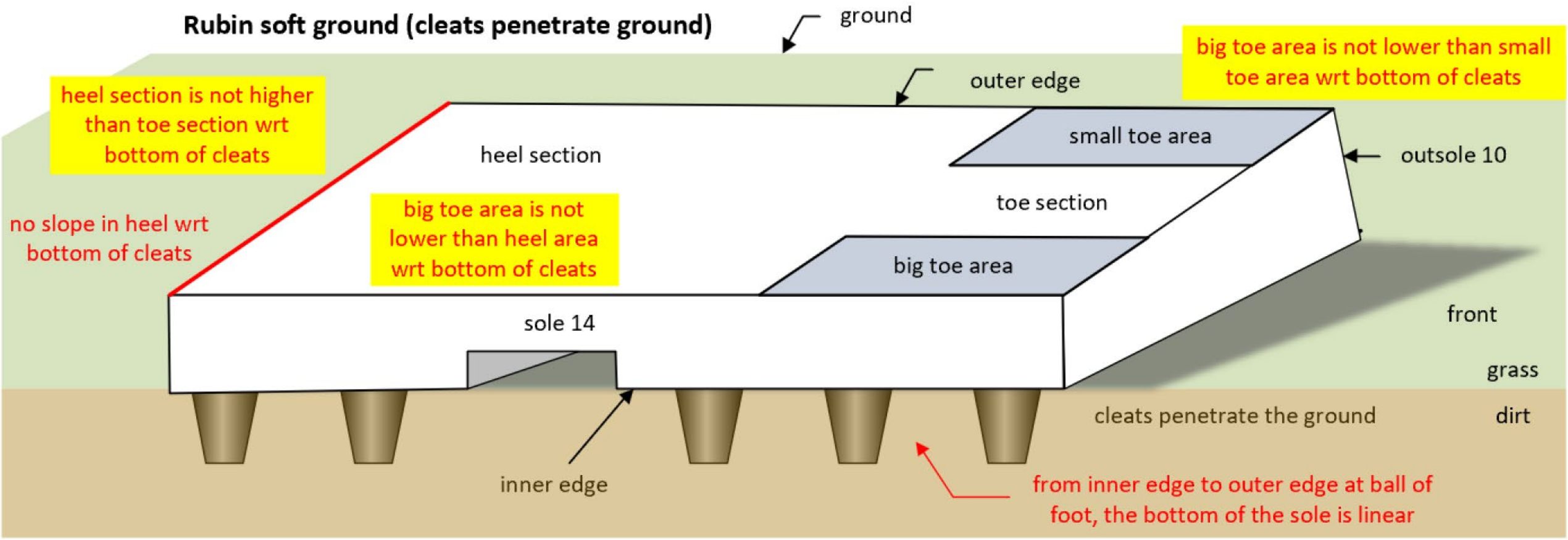

IPR2024-00638: Paper 12, 58; EX2008 ¶264

IPR2024-00638 ('760 Patent): No Big Toe Area Lower than Heel Area – "What If" Embodiments

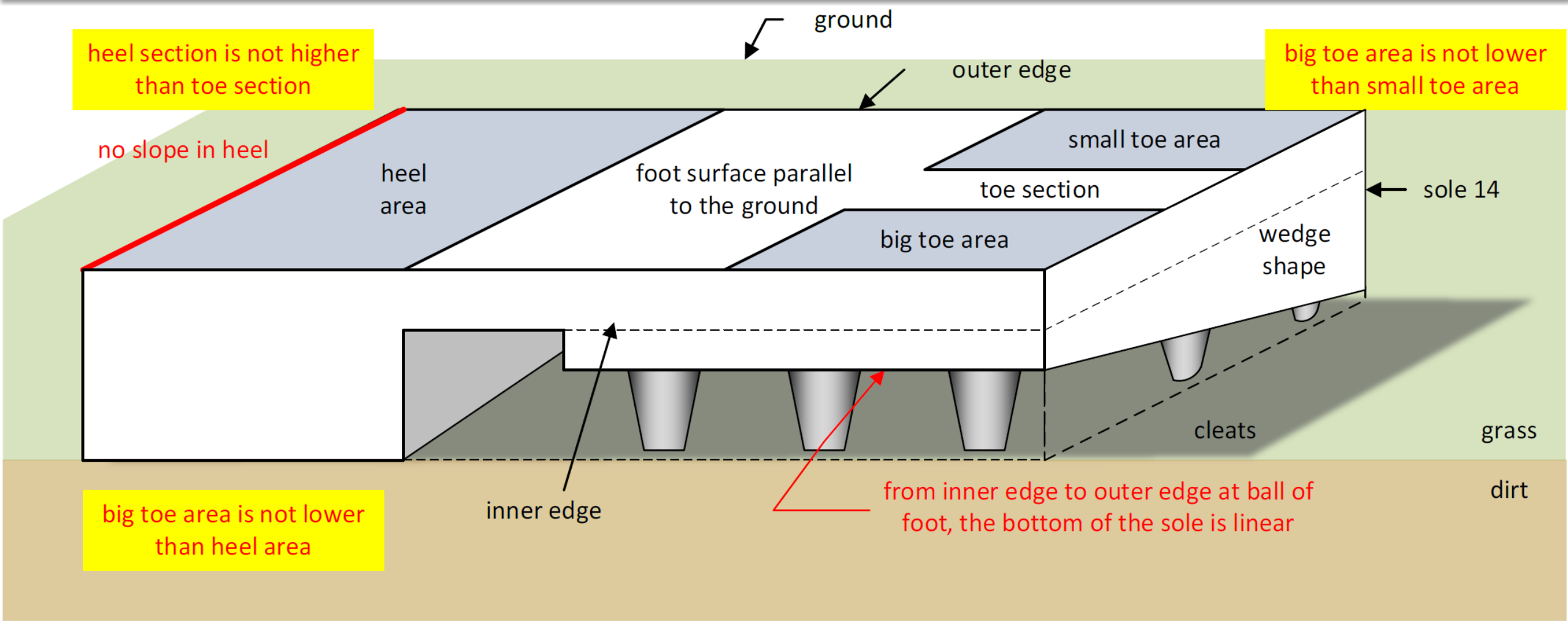

IPR2024-00638: Paper 12, 59-60; EX2008 ¶269

IPR2024-00638 ('760 Patent): No Big Toe Area Lower than Heel Area – "What If" Embodiments

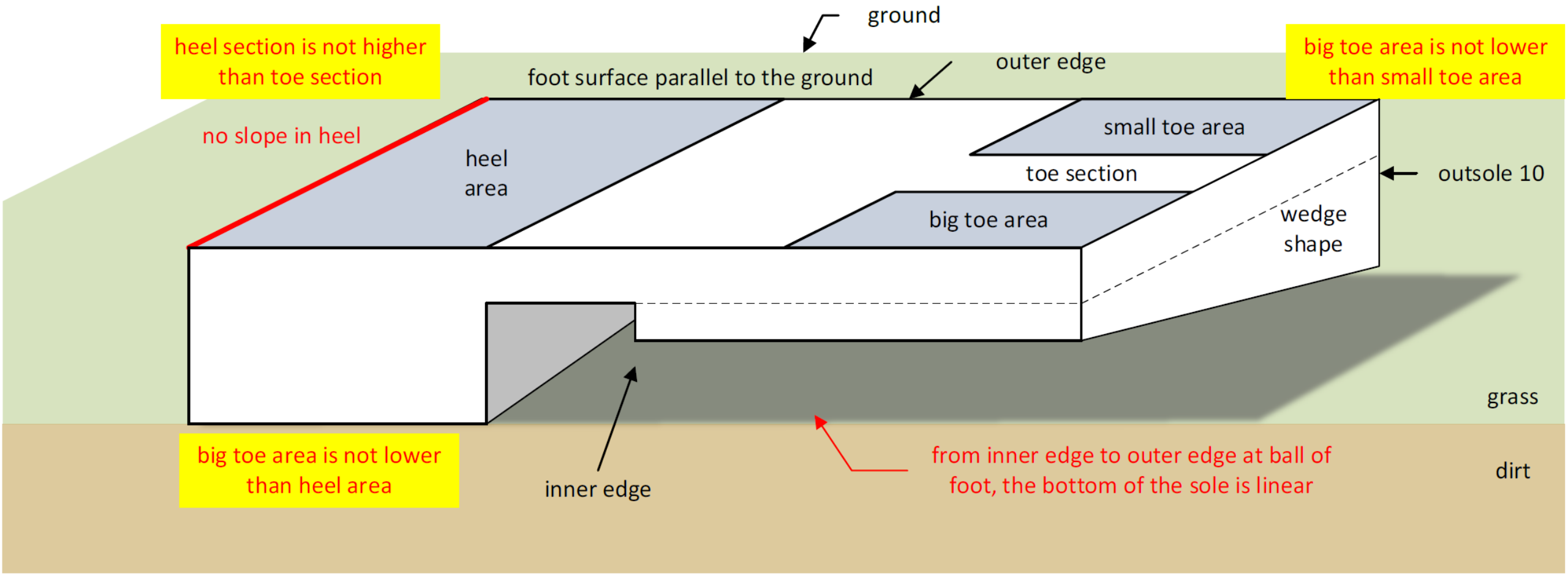

IPR2024-00638: Paper 12, 59-60; EX2008 ¶272

IPR2024-00638 ('760 Patent): No Big Toe Area Lower than Heel Area – "What If" Embodiments

Rubin "what if" w/o spikes wrt 760

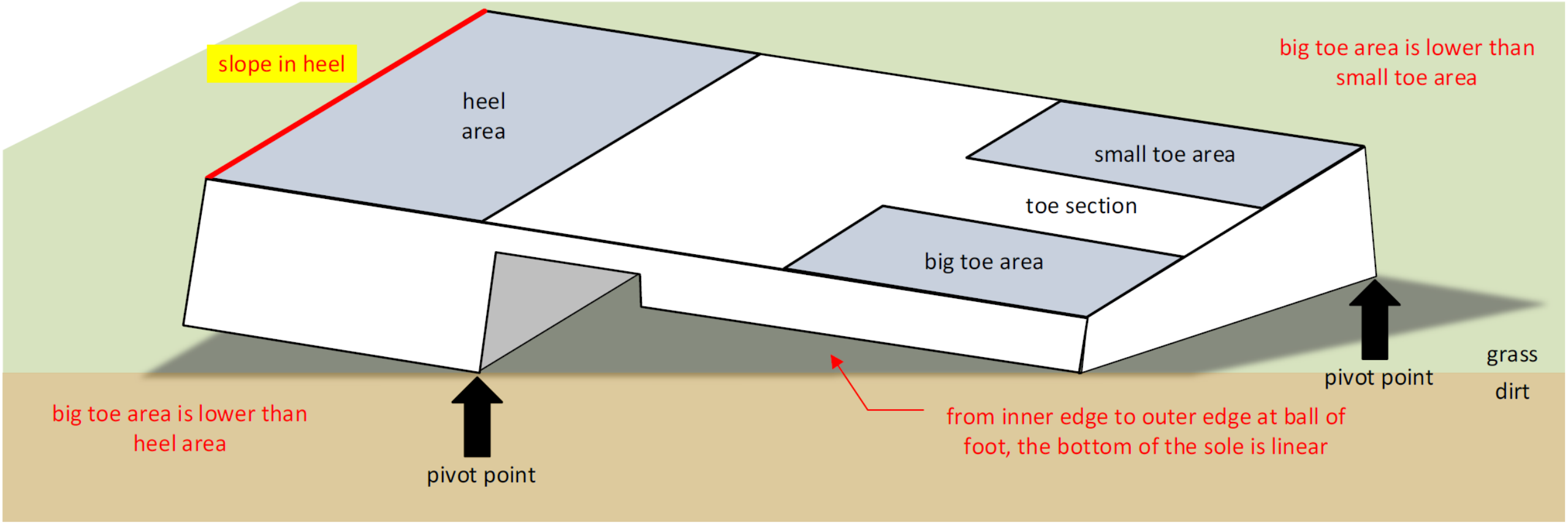

IPR2024-00638: Paper 12, 59-60; EX2008 ¶274

IPR2024-00638 ('760 Patent): No "Pair of Shoes"

Claim 1: "A ***pair of shoes*** comprises: a ***left foot shoe*** . . . and a ***right foot shoe***":

United States Patent [19]
Rubin

[11] **3,789,523**
[45] **Feb. 5, 1974**

[54] **GOLF SHOE**

[57] **ABSTRACT**

FIGS. 2 and 4 illustrate the manner of use of the shoe 10. Specifically, in FIG. 4, the golfer will imbed cleats 22 in a golf playing surface 32 when addressing a golf ball. Thee rearwardmost foot of the golfer will be tilted inwardly because of the wedge-shaped sole 14 of shoe 10. This will tend to provide a more satisfactory weight distribution when hitting the ball. Furthermore, it has

IPR2024-00638: EX1006, Abstract; Paper 12, 66-68; EX2008 ¶¶278-280; Paper 23, 26

SECONDARY CONSIDERATIONS

Nexus

CLAIM CHART FOR U.S. PATENT NO. 11,064,760

Claim	Exemplary Evidence of Practice
1[pre]: A pair of shoes comprises:	To the extent the preamble is limiting, each of the Athalonz Products is a pair of shoes. For example, the Athalonz EnVe Golf Shoes ("EnVe") are a pair of shoes. 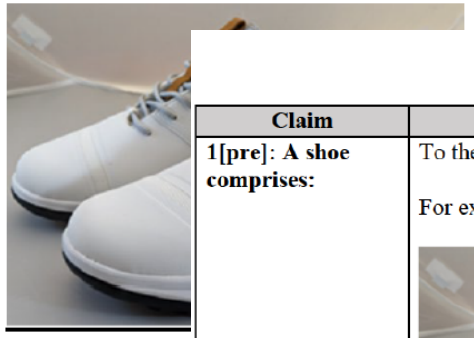 To the extent Unde doctrine of equival way, to achieve sul
1[a]: a left foot shoe including;	The Athalonz Prod foot shoe function foot shoe is picture For example, the E

CLAIM CHART FOR U.S. PATENT NO. 10,674,786

Claim	Exemplary Evidence of Practice
1[pre]: An apparatus comprises:	To the extent the preamble is limiting, each of the Athalonz Products is an apparatus. For example, the Athalonz EnVe Golf Shoe ("EnVe") is a shoe with an insole, which is an apparatus.

CLAIM CHART FOR U.S. PATENT NO. 11,013,291

Claim	Exemplary Evidence of Practice
1[pre]: A shoe comprises:	To the extent the preamble is limiting, each of the Athalonz Products is a shoe. For example, the Athalonz EnVe Golf Shoe ("EnVe") is a shoe. To the extent Under Armour disputes literal practice for this element, the Athalonz Products practice this element under the doctrine of equivalents. That is, the Athalonz Products perform substantially the same function, in substantially the same way, to achieve substantially the same result.
1[a]: an upper section;	The Athalonz Products have an upper section. For example, the EnVe has an upper section, as shown below.

element, the Athalonz Products practice this element under the
m substantially the same function, in substantially the same way,

has a uniform height from an outer edge to an inner edge of the

nple, the EnVe has a heel platform section as shown below. The
EnVe has a uniform height from an outer edge to an inner edge of

IPR2024-00636: Paper 23, 25; EX2014; EX2008 ¶322
IPR2024-00637: Paper 23, 25; EX2014; EX2008 ¶341
IPR2024-00638: Paper 23, 26; EX2014; EX2008 ¶285

Industry Praise and Unexpected Results

EX1028

SI

From the ground up

Athalonz, a new player in the golf shoe game, positions itself as a comfortable power source that is making believers of World Long Drive tour members.

Mike Purkey | Nov 21, 2019

After the drive, McDowell was amazed at the way the shoes connected him to the ground and said, "This is what I try to teach."

McDowell recommended the shoes to fellow long driver Ryan Steenberg, who has won two WLD events in the EnVe shoes. Pretty soon, other long drivers tried the shoes and now Athalonz is a popular choice among top WLD tour members, including top-ranked Kyle Berkshire. About 50 percent of all the WLD players wear EnVe shoes, Markison said.

IPR2024-00636: Paper 12, 73-75; Paper 23, 26-27; EX1028
IPR2024-00637: Paper 12, 84-85; Paper 23, 26-27; EX1028
IPR2024-00638: Paper 12, 73-74; Paper 23, 27-28; EX1028

Industry Praise and Unexpected Results

EX2013

Athalonz Golf Shoes: The Golf Shoe for Distance?

Can a pair of golf shoes help you add more distance and hit more fairways?

I know, it sounds too good to be true. But when you're done reading this I think you will believe in **Athalonz golf shoes**.

These shoes are used by long drive competitors, Bernhard Langer, and other professional golfers.

EX2008

329. At first, the other players did not believe him but, one by one, the other players starting wearing Athalonz golf shoes. By mid-way through the 2019 WLD season, about half of all WLD athletes were wearing Athalonz golf shoes. In addition, a majority of the top ten men and women were wearing Athalonz golf shoes, including the men's and women's 2019 WLD champions.

IPR2024-00636: Paper 12, 73-75; Paper 23, 26-27; EX2013; EX2008 ¶¶326-332
IPR2024-00637: Paper 12, 84-85; Paper 23, 26-27; EX2013; EX2008 ¶¶345-351
IPR2024-00638: Paper 12, 73-74; Paper 23, 27-28; EX2013; EX2008 ¶¶289-295

Copying

Athletic Positioning Shoe ™

Presentation to Under Armour
August 22, 2013

AdMark Athletic Ventures Confidential Information

1

IPR2024-00636: EX2012, 1; Paper 12, 75-78; EX2008 ¶¶333-340; Paper 23, 27-28
IPR2024-00637: EX2012, 1; Paper 12, 85-88; EX2008 ¶¶352-358; Paper 23, 27-28
IPR2024-00638: EX2012, 1; Paper 12, 74-77; EX2008 ¶¶352-358; Paper 23, 28-29

Copying

Creating A Solution

- We created a sole and/or an insole that provides:
  - a linear heel section that is higher than the toe section (i.e., downward slope from heel to toe); and
  - The inner edge of the ball of the foot and/or big toe portion of the toe section is lower than the outer edge of the toe section (i.e., inward slope from outside edge of front foot area to inside edge of front foot area);
- **Our Athletic Positioning Concept gives the athlete the optimal foot positioning for an optimal Athletic Start;**

AdMark Athletic Ventures Confidential Information 13

IPR2024-00636: EX2012, 13; Paper 12, 75-78; EX2008 ¶¶333-340; Paper 23, 27-28
IPR2024-00637: EX2012, 13; Paper 12, 85-88; EX2008 ¶¶352-358; Paper 23, 27-28
IPR2024-00638: EX2012, 13; Paper 12, 74-77; EX2008 ¶¶352-358; Paper 23, 28-29

Copying

Athletic Positioning with Heel Platform

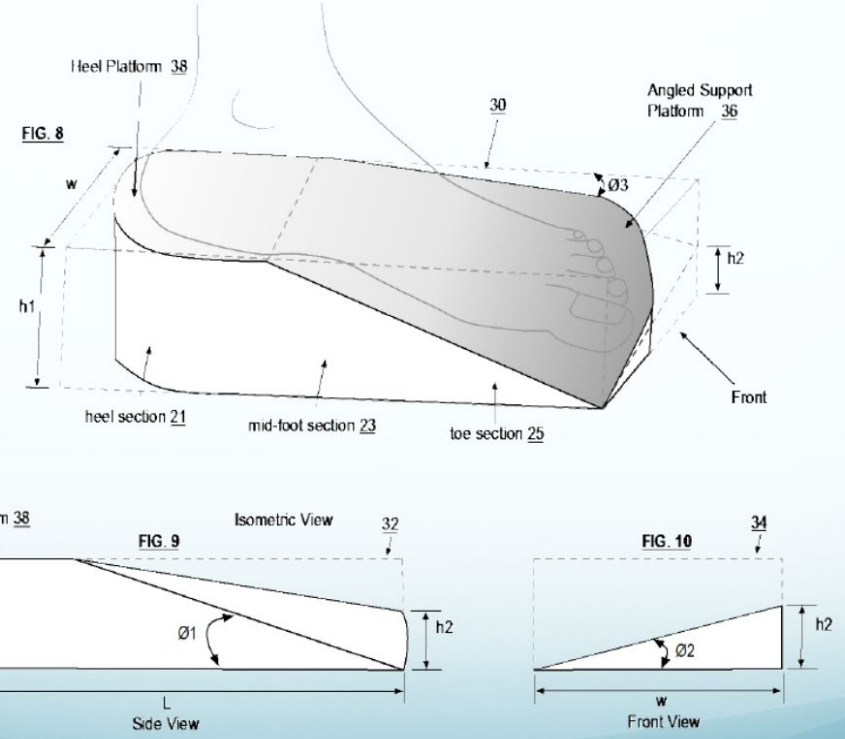

AdMark Athletic Ventures Confidential Information

54

IPR2024-00636: EX2012, 54; Paper 12, 75-78; EX2008 ¶¶333-340; Paper 23, 27-28
IPR2024-00637: EX2012, 54; Paper 12, 85-88; EX2008 ¶¶352-358; Paper 23, 27-28
IPR2024-00638: EX2012, 54; Paper 12, 74-77; EX2008 ¶¶352-358; Paper 23, 28-29

Copying

337. At the meeting, I discussed with Under Armour various options for acquiring or licensing Athalonz's technology. EX2012 at 47-49.

338. After the meeting, in 2014, I sent Under Armour a physical prototype of the Athalonz shoes, which they told me they would be testing internally.

339. Under Armour never purchased or licensed the Athalonz patents or technology. Instead, Under Armour began releasing its own shoes that implemented the athletic positioning technology claimed in the '786 patent. These shoes were all released after I presented the slides above to Under Armour in 2013.

IPR2024-00636: EX2012, 1; Paper 12, 75-78; EX2008 ¶¶333-340; Paper 23, 27-28
IPR2024-00637: EX2012, 1; Paper 12, 85-88; EX2008 ¶¶352-358; Paper 23, 27-28
IPR2024-00638: EX2012, 1; Paper 12, 74-77; EX2008 ¶¶352-358; Paper 23, 28-29

Copying

IN THE UNITED STATES DISTRICT COURT
FOR THE EASTERN DISTRICT OF TEXAS
MARSHALL DIVISION

ATHALONZ, LLC,	§	
	§	Case No. 2:23-cv-0193-JRG
Plaintiff,	§	
	§	DEMAND FOR JURY TRIAL
v.	§	
	§	
UNDER ARMOUR, INC.,	§	
	§	
Defendant.	§	
	§	

PLAINTIFF ATHALONZ, LLC'S FIRST AMENDED COMPLAINT

B. Under Armour Has Known About Athalonz's Patented Technology And Its Infringement Of The Asserted Patents

33. Under Armour, including senior employees and executives, has known about Athalonz's patented technology since at least 2013. For example, on information and belief, Kevin

C. Under Armour's Infringement of Athalonz's Intellectual Property

35. Upon information and belief, Under Armour has infringed and continues to infringe one or more claims of the Asserted Patents by, at minimum, making, using, offering for sale, and selling infringing products in the United States and in this District.

36. The accused products include, without limitation, athletic shoes provided by Under Armour, such as the HOVR Forge RC Spikeless Golf Shoe, Unisex Curry HOVR Splash Basketball Shoe, Unisex Curry 4 FloTro Basketball Shoe, Harper 7 Low Elite TPU Baseball Cleat, and the HOVR Drive 2 Spiked Golf Shoe (collectively, the "Accused Products"). Each of these shoes practice at least one claim of each Asserted Patent.

IPR2024-00636: Paper 23, 27-28; EX1031
IPR2024-00637: Paper 23, 27-28; EX1031
IPR2024-00638: Paper 23, 28-29; EX1031

Copying

Under Armour Infringing Shoes (EX1025)

1[f]: a first height at an inside edge and at an outside edge of the shoe along a heel section of the shoe,	The Accused Products have a first height at an inside edge and at an outside edge of the shoe along a heel section of the shoe. For example, the Curry 4 FloTro has a first height of 29.4mm at an inside edge and at an outside edge of the shoe along a heel section of the shoe, as shown below. 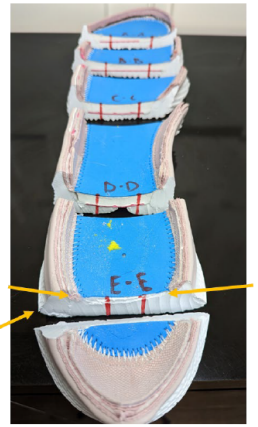 The other Accused Products also have a first height at an inside edge and at an outside edge of the shoe along a heel section of the shoe. Athalonz incorporates by reference the documents cited above for each of the Accused Products. **Accused Product** / **First Height (EE)** **Charged Curry** 20.1 **Curry 10** 24.5 **Curry 11** 29.9

Athalonz Patent-Practicing Shoes (EX1036)

Claim	Exemplary Evidence of Practice
and at an outside edge of the shoe along a heel section of the shoe,	For example, the EnVe has a first height of 20.6mm at an inside edge and at an outside edge of the shoe along a heel section of the shoe, as shown below. 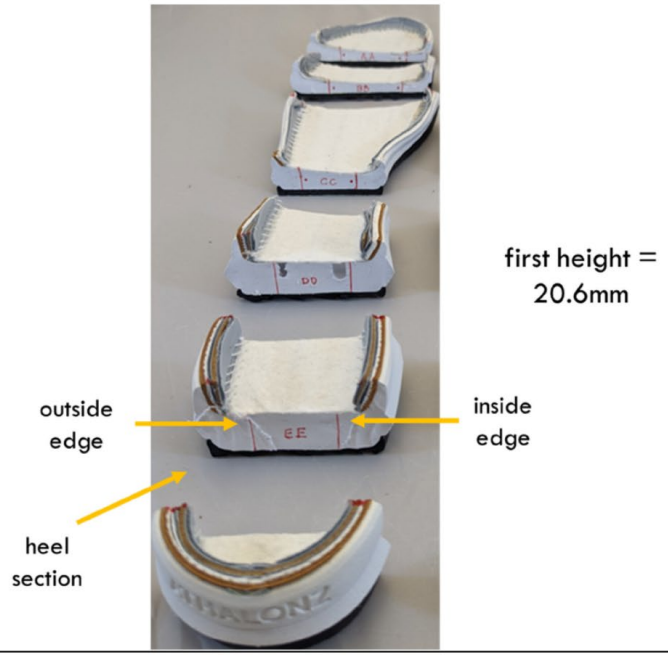

IPR2024-00636: Paper 23, 27-28; EX1025, 54; EX1036, 9
IPR2024-00637: Paper 23, 27-28; EX1025, 54; EX1036, 9
IPR2024-00638: Paper 23, 28-29; EX1025, 54; EX1036, 9

Copying

Evidence of access and substantial similarity is evidence of copying. Medtronic's argument is tantamount to requiring that copying can be proven only by direct evidence "such as photos of patented features or disassembly of products," *Liqwd*, 941 F.3d at 1137, rather than circumstantial evidence such as access and similarity. Our case law has never drawn any such distinction, nor would such a distinction be consistent with basic principles of evidence and inference. Circumstantial evidence is just that—evidence. It establishes that a given fact is more likely to be true than one would otherwise believe in the absence of the evidence. Nor is circumstantial evidence second-class to direct evidence: "Circumstantial evidence is not only sufficient, but may also be more certain, satisfying and persuasive than direct evidence." *Michalic v. Cleveland Tankers, Inc.*, 364 U.S. 325, 330(1960) (citation omitted).

Medtronic, Inc. v. Teleflex Innovations S.a.r.l., 70 F.4th 1331, 1340 (Fed. Cir. 2023) (emphasis added)

IPR2024-00636: Paper 23, 27-28
IPR2024-00637: Paper 23, 27-28
IPR2024-00638: Paper 23, 28-29

EXPERT QUALIFICATIONS

Person of Ordinary Skill in the Art

- At least a B.S. or equivalent degree related to industrial or product design and at least two years' experience designing or developing athletic shoes

OR

- At least five years' experience designing or developing athletic shoes

IPR2024-00636: Paper 1, 15; EX2008 ¶40
IPR2024-00637: Paper 1, 11; EX2008 ¶40
IPR2024-00638: Paper 1, 15; EX2008 ¶40

Mr. Markison is a Qualified Expert

Timothy W. Markison

Garlick & Markison	Athalonz, LLC	MPP, Inc.
2025 Guadalupe Street	2716 N Ogden Road	20 N Upper Wacker Drive
Suite 260	Suite 101	Suite 4200
Austin, TX 78705	Mesa, AZ 85215	Chicago, IL 60606

Timothy W. Markison
Founding Partner of Garlick & Markison
Founder & CEO of Athalonz, LLC
Co-Founder & CEO of MPP, Inc.

FIELDS OF SPECIALIZATION

Legal

- **Patent application preparation and prosecution**: Covering a wide range of technologies as listed below
- **Patent value generation**: Support clients in building a valuable patent portfolio and support clients in licensing, selling, and/or enforcing patents of their portfolios

Technology

- **Physics of footwear**: How forces traversing through footwear affect human movement
- **Physics of body impact**: How impact forces can be diffused to reduce risk of injury
- **Monitoring athletic movement in concert with physics of footwear**: Monitoring forces through footwear directly corresponds to athletic movement
- **Wireless communications:** new hardware, software, and/or protocols for Bluetooth, wi-fi, cellular, broadcast, point-to-point, and RFID (Radio Frequency IDentification)
- **Database system:** supporting new hardware design and new software architecture
- **Capacitive touch sensing:** for touch screen applications, bio-medical sensing applications, and bio-medical stimulation
- **Wired communication:** using low analog voltage signaling
- **Erasure encoding dispersed storage:** for safely and securely storing Big Data
- **Quantum computing:** new quantum mechanics approach to qubits and supporting circuitry thereof
- **Artificial Intelligence** based system for code enhancement
- **Intra & Inter wireless communications for ICs** to substantially reduce power consumption of ICs due to digital data conveyances
- **Battery technologies** regarding charging, discharging, and modeling of batteries

Business

UNDER ARMOUR, INC. v. ATHALONZ, LLC
IPR2024-00636
ATHALONZ EXHIBIT 2009
Page 1 of 47

- **Consulting** regarding the business value of patents
- **Strategic patent portfolio development**: regarding the number of inventions to patent protect, when, where, and how to protect inventions, the business objectives of patent portfolio, and the business justification for developing patent portfolio
- **Inventing** independently, on behalf of G&M clients, on behalf of Athalonz, on behalf of MPP, or on behalf of MPP clients

DEGREES

- B.S.E.E. Electrical Engineering & Computer Design from Illinois Institute of Technology, 1984
- Juris Doctorate from Loyola University Chicago School of Law, 1993

PROFESSIONAL MEMBERSHIPS

- Member of USPTO patent bar since 1989
- Member of the Illinois State bar since 1993
- Licensed to practice in the Federal District Courts of Illinois since 1993
- Member of IEEE

PROFESSIONAL POSITIONS

Current Positions

2000 – Present Founding Partner of Garlick & Markison (G&M)
Responsibilities include:

- Managing the preparation and prosecution of patent applications by other attorneys agents of G&M on behalf of its clients
- Managing quality program to maintain a firm-wide issuance rate of over ninety percent and a maintaining an office action to allowance ratio of two or less
- Personally preparing and prosecuting thousands of patent applications for G&M clients
- Creating patent strategies that resulted in billions of dollar in value for clients (spun out patent strategy in 2023, when MPP was launched)
- Supporting clients in licensing, selling, and/or enforcing patents of their portfolios
- Inventing with, and/or on behalf of, clients to expand their respective patent portfolio

2011 – Present Founder & CEO of Athalonz, LLC
Responsibilities include:

- Overseeing business operations
- Leading research & development of footwear that leverages the principles of physics to improve human movement and athletic performance
- Leading the design of physics footwear
- Managing patent protection of physics footwear innovations

Timothy W. Markison

UNDER ARMOUR, INC. v. ATHALONZ, LLC
IPR2024-00636
ATHALONZ EXHIBIT 2009
Page 2 of 47

IPR2024-00636: EX2009; Paper 23, 3-6; Paper 12, 23-24
IPR2024-00637: EX2009; Paper 23, 3-6; Paper 12, 23-24
IPR2024-00638: EX2009; Paper 23, 2-5; Paper 12, 23-24

MOTIONS TO EXCLUDE

Exhibits 1032 and 1033

3/18/25, 4:19 PM Cross section Definition & Meaning | Britannica Dictionary

The Britannica Dictionary

cross-section

cross section
noun
plural **cross sections**

1 : a view or drawing that shows what the inside of something looks like after a cut has been made across it

[count]

[+] Example sentences

[noncount]

[+] Example sentences

2 [count] : a small group that includes examples of the different types of people or things in a larger group

[+] Example sentences

— **cross–sectional** /ˈkrɑːsˈsɛkʃənəl/ *adjective*

[+] Example sentences

4/7/25, 1:29 PM Perspective Definition & Meaning | Britannica Dictionary

The Britannica Dictionary

perspective

perspective
/pɚˈspɛktɪv/
noun
plural **perspectives**

1 : a way of thinking about and understanding something (such as a particular issue or life in general)

[count]

[+] Example sentences

— often + *on*

[+] Example sentences

[noncount]

[+] Example sentences

2 [noncount]
a : a condition in which a person knows which things are important and does not worry or think about unimportant things

[+] Example sentences

— often used after *in* or *into*

[+] Example sentences

b : the ability to understand which things are truly important and which things are not

[+] Example sentences

3 [count] : the angle or direction that a person uses to look at an object

[+] Example sentences

4 [noncount] : a way of showing depth or distance in a painting or drawing by making the objects that are far away smaller and making the objects that are closer to the viewer larger

[+] Example sentences

Exhibit 1034

PGA tour official stats	2017/2018	2018/2019	2019/2020	2020/2021	2021/2022	2022/2023	2024
total driving	1998	1998	1998	1998	1998	1998	1998
driving distance	267.8	272.6	259.4	262.3	251.5	266.3	268.4
longest drives	341	287	303	284	271	273	333
driving accuracy	76.72	76.79	70.24	84.52	96.443	89.29	84.35
GIR	68.06	63.89	69.44	59.26	61.11	58.33	75.44
Scrambling	65.22	42.31	66.67	47.73	35.71	53.33	61.9
Putting Average	1.908	1.739	1.76	1.703	1.955	1.905	1.756
Scoring avg (actual)	71.75	74	69.33	72.67	76	74.5	69.74
Birdie avg	2.25	3.5	3.5	3.33	1	1	4.17

	Pre-Athalonz Shoe Avg. (Cols. B-D)	Post-Athalonz Shoe Avg. (Cols. E-H)	
total driving	1998	1998	Total Driving is computed by totaling a player's rank in both driving distance and driving accuracy
driving distance	266.60	262.125	The average number of yards per measured drive
longest drives	310.33	290.25	For all drives measured with a laser, this is the longest drive for the entire year
driving accuracy	74.58	88.65	The percentage of time a tee shot comes to rest in the fairway (regardless of club
GIR	67.13	63.54	The percent of time a player was able to hit the green in regulation (greens hit in regulation/holes played)
Scrambling	58.07	49.67	The percent of time a player misses the green in regulation, but still makes par or better
Putting Average	1.80	1.83	The average number of putts per green in regulation
Scoring avg (actual)	71.69	73.23	The average number of strokes per completed round
Birdie avg	3.08	2.38	The average number of birdies made per round played