EXHIBIT U – U.S. Patent No. 11,375,768 OBVIOUSNESS CHART

Reference	Date of Filing / Publication	Title
U.S. Patent No. 4,754,561	Jul. 5, 1988	GOLF SHOE
U.S. Patent No. 7.464,428	Dec. 16, 2008	SOLE ELEMENTS OF VARYING DENSITY AND METHODS OF MANUFACTURE
U.S. Patent No. 4,615,126	Oct. 7, 1986	FOOTWEAR FOR PHYSICAL EXERCISE
U.S. Patent No. 4,704.809	Nov. 10, 1987	GOLF SHOE
U.S. Patent No. 4,642,911	Feb. 17, 1987	DUAL-COMPRESSION FOREFOOT COMPENSATED FOOTWEAR
U.S. Patent No. 11,375,768	Jul. 5, 2022	ADJUSTABLE ATHLETIC POSITIONING APPARATUS AND APPLICATIONS THEREOF
U.S. Patent No. 5,025,573	Jun. 25, 1991	MULTI-DENSITY SHOE SOLE
U.S. Patent No. 6,604,301	Aug. 12, 2003	SHOE SOLE INSERT
U.S. Patent No. 6,158,151	Dec. 12, 2000	GOLF SHOES
U.S. Patent No. 3,789,523	Feb. 5, 1974	GOLF SHOE
U.S. Patent Publication No. 2004/0040181	Mar. 4, 2004	GOLF SHOE
U.S. Patent Publication No. 2010/0242307	Sep. 30, 2010	GOLF SHOE
DE Patent No. 4417563	Nov. 23, 1995	FOOTBALL BOOT WITH ADDITIONAL GRIPS ON SOLE
EP0092366	Oct. 26, 1983	RUNNING SHOES

The above referenced patents and publications, in combination with each other and/or in combination with the other charted references, render obvious claims 1-5 and 8 of U.S. Patent No. 11,375,768. These invalidity contentions are based on Under Armour's present understanding of the asserted claims and Athalonz's apparent construction of the claims in its September 14, 2023 Disclosure of Asserted Claims and Infringement Contentions, which is deficient at least insofar as it fails to cite any documents or identify accused structures, acts, or materials in the Accused Products with particularity. Under Armour does not agree with Athalonz's application of the claims, or that the claims satisfy the requirements of 35 U.S.C. § 112. Under Armour's contentions herein are not, and should in no way be seen as, admissions or adoptions as to any particular claim scope or construction, or as any admission that any particular element is met by any accused product in any particular way. Under Armour objects to any attempt to imply claim construction from this chart. Under Armour's prior art invalidity contentions are made in a variety of alternatives and do not represent Under Armour's agreement or view as to the meaning, definiteness, written description support for, or enablement of any claim contained therein.

U.S. Patent No. 11,375,768	Prior Art References
1[pre]. An athletic shoe comprises:	The primary references all disclose an athletic shoe.
1[a] an upper section; and	The primary references all disclose an upper shoe section.
1[b] a sole section coupled to the upper section, wherein the sole section includes:	The primary references all disclose a sole section coupled to the upper section.
1[c] a heel platform having a first height that is substantially uniform around a perimeter of the heel platform, wherein the heel platform is constructed of a first material having a first compression factor; and	The primary references all disclose a heel platform having a first height that is substantially uniform around a perimeter of the heel platform, wherein the heel platform is constructed of a first material having a first compression factor.
1[d] a forefoot platform juxtaposed to the heel platform, wherein the forefoot platform is constructed of a second material having a gradient compression factor, wherein when the athletic shoe is worn by an athlete and weight of the athlete is applied to the athletic shoe, the second material compresses to a first level near an outer edge of the	An athletic shoe comprising a forefoot platform constructed of a second material having a gradient compression factor was well known when the ’768 patent was filed. To the extent Plaintiff argues that any reference fails to disclose this element, it would have been obvious to a person of ordinary skill based on the primary reference in view of any one of the references below. At least the following references disclose this element and would have been obvious to combine with the primary references in for the reasons discussed below: “Thus, it is an object of the present invention to provide a sole unit for shoes, in particular for sport shoes, that can be produced in a simple and, therefore, convenient manner with respect to the production technology, and still allow a predetermined density variation in a transverse and/or longitudinal direction over a complete area of the sole element. One aspect of one embodiment of the present invention is to not use two different materials with different densities to create the density variation over the sole element and to connect these materials subsequently, but to use a single material being supplied as a preform and having

U.S. Patent No. 11,375,768	Prior Art References
sole section and the second material compresses to a second level near an inner edge of the sole section, wherein the second level of compression is greater than the first level of compression,	a thickness distribution that is transformed by pressure forming into the desired density distribution." '428 patent, 3:3-15. "In one aspect, an embodiment of the invention relates to a method of manufacturing a sole element for a shoe, where the sole element has a varying density distribution in at least one direction, for example a transverse and/or longitudinal direction. The method includes manufacturing a sole element preform from a polymer material with a thickness varying in the transverse and/or longitudinal direction depending on the specific density distribution desired and press-forming the sole element preform in a forming tool to form the finished sole element from the sole element preform. In one embodiment, the finished sole element has a substantially constant thickness in at least one transverse direction. Additionally, the sole element preform may be subjected to a non-uniform compression during the press-forming step." '428 patent, 3:33-15. "In another aspect, an embodiment of the invention relates to a method of manufacturing a sole element for a shoe, where the sole element has a varying density distribution in at least one direction, for example a transverse and/or longitudinal direction. The method includes manufacturing a sole element preform from a polymer material and press-forming the sole element preform in a forming tool with a selective supply of heat to single sections of a surface of the tool to locally selectively expand the sole element preform to form the finished sole element with the desired density distribution from the sole element preform." '428 patent, 3:46-56. 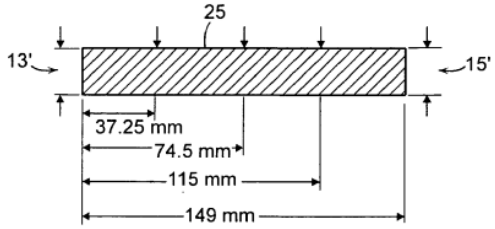 FIG. 4B "If such a preform 20 is formed in a conventionally known forming tool, the sole element 25, as shown in FIGS. 4A and 4B, is obtained. As depicted in FIG. 4A, the sole element 25 has a width a′ of about 149 mm, a length b′ of about 250 mm and a constant height h′ of about 13 mm. FIG. 4B shows again a vertical section through the finished sole element 25 in accordance with the invention. If the hardness of the resulting sole

U.S. Patent No. 11,375,768	Prior Art References
	element 25 is measured with reference to the distance from the left side 13′, the following values shown in Table 2 are obtained: TABLE 2 Hardness distribution of the shaped sole unit from the medial side 13′ to the lateral side 15′ in one embodiment DISTANCE FROM THE MEDIAL SIDE [MM] HARDNESS [C] 0 60.0 37.25 57.5 74.50 55.0 115.0 52.5 149.0 50.0” ’428 patent, 7:36-58. “As can be seen, the hardness (measured in Shore C) decreases from about 60 C to about 50 C. Therefore, a reduction of about 10 C is obtained (i.e., in the range of about 15% to 20%), if the preform 20 is as described in Table 1 and consists of polyurethane.” ’428 patent, 7:60-64. “The locally varying hardness of the sole unit 25 can be explained by the surplus of material on the left side 13, which is compressed more than the material on the right side 15 during the final forming step in such a way that a continuously varying density distribution is obtained in the sole unit 25. The resulting density, in turn, influences the hardness and therefore the elasticity of the sole unit 25.” ’428 patent 8:12-18.

U.S. Patent No. 11,375,768	Prior Art References
	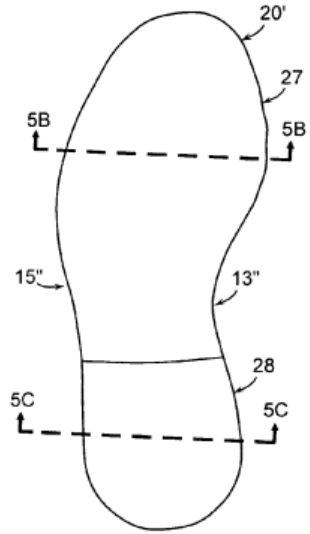 FIG. 5A 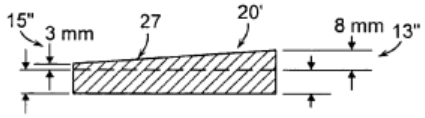 FIG. 5B 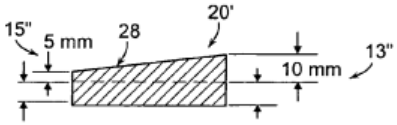 FIG. 5C "FIGS. 5A-5C show an alternative embodiment of a preform 20′ in accordance with the invention. This preform 20′ having already the shape of a sole has the special feature that the height does not only vary from

U.S. Patent No. 11,375,768	Prior Art References
	the medial (formerly left) side 13″ to the lateral (formerly right) side 15″, but also from the rear foot part 28 to the forefoot part 27. The sections along the line 5B-5B (FIG. 5B) and the line 5C-5C (FIG. 5C) show that the surplus of height in the forefoot part 27 is about 8 mm on the medial side 13″ and about 3 mm on the lateral side 15″; whereas, in the rear foot part 28, the surplus is about 10 mm on the medial side 13″ and about 5 mm on the lateral side 15″. With such a preform 20′, a modulation of the density and, therefore, of the hardness is not only obtained from the medial side 13″ to the lateral side 15″, but also from the rear foot part 28 to the forefoot part 27." '428 patent, 8:19-33. **<u>'911 patent:</u>** "The sole forefoot portion is comprised of different compressibilities of materials selected and arranged across the width thereof such that the sole effectively slopes at an angle upwardly from the lateral aspect to the medial aspect when weight-bearing forces are exerted on the forefoot and thereby providing an effective inclined surface of resultant thickness greater at the medial aspect of the forefoot than at the lateral aspect as a result of less compressible material at the medial aspect of the forefoot than at the lateral aspect when the sole of said article of footwear is intended for use by individuals whose feet have a tendency toward compensation in a pronated direction due to their inherent inverted forefoot varus foot type." '911 patent, Abstract. "The present invention is intended for any and all footwear wherein dual-density or dual-compressibility materials or combinations of different materials may be incorporated into either the midsole, outersole, or innersole construction of the footwear." '911 patent, 1:11-18.

U.S. Patent No. 11,375,768	Prior Art References
	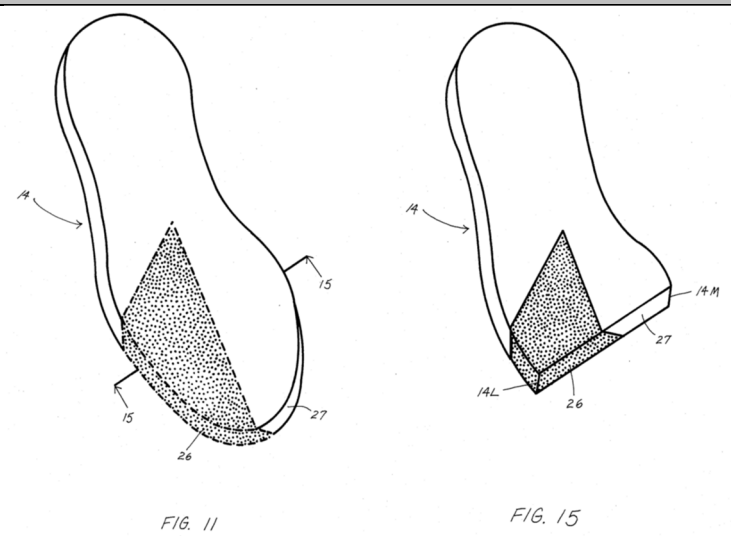 "FIG. 11 is a perspective plan view of a right midsole of the footwear of the present invention, (in this example, a running shoe midsole), showing the area of a medial and lateral half dual-density forefoot valgus compensation in phantom and defined by the outlined broken lines and whereby the dotted shaded area represents a denser material than that of the non-shaded area which represents a less dense material." '911 patent, 15:15-22. "The area of the sole of an article of footwear to be compensated by a forefoot valgus compensation of the medial and lateral half dual-density method is shown in FIGS. 7 and 11. FIG. 7 shows the area of this forefoot valgus compensation, as viewed from top to bottom, in its relationship to the metatarsal bones, joints, and toes of a right foot and in its relationship to the median sagittal plane (the midline) and bisection of the foot, line A. The area of a medial and lateral half dual-density fore foot valgus compensation in FIG. 11 is drawn in phantom and shows the shaded area 26 representing a denser material while the non-shaded area 27 represents a less dense material." '911 patent, 20:1-13.

U.S. Patent No. 11,375,768	Prior Art References
	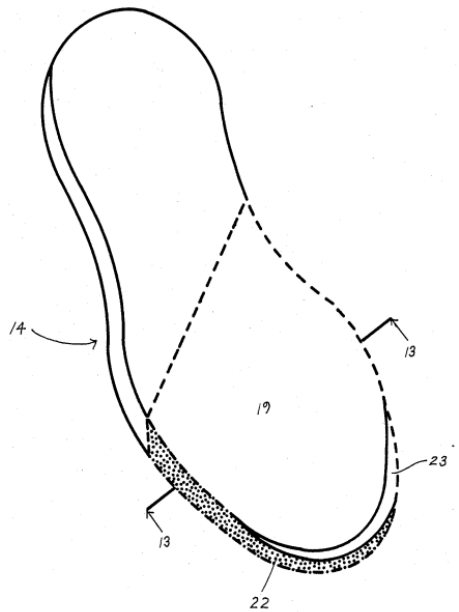 FIG. 9 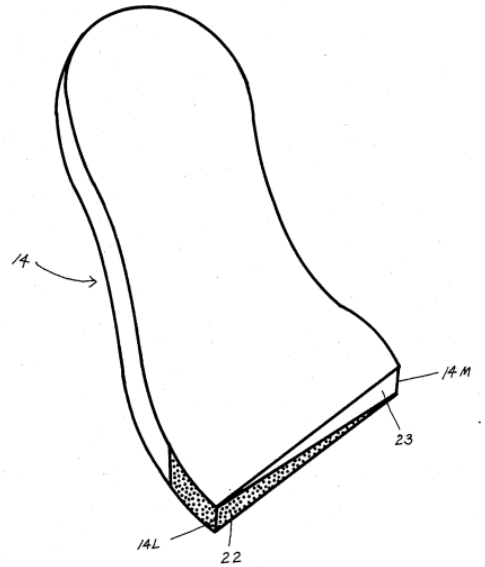 FIG. 13 "The 45 degree split dual-density methods are generally preferred to the medial and lateral half dual-density methods because of a more even and gradual alteration of the weight-bearing gravitational forces as they are delivered and directed across the forefoot section of the footwear during the midstance and propulsive phases of gait." '911 patent, 12:41-47. "When applying a 45 degree split dual-density fore foot valgus compensation the area of the denser accommodative material effectively slopes upward and toward the lateral aspect of the footwear in all directions from its vertex at the area beneath the medial aspect of the navicular bone. It then radiates from proximally to distally from this vertex and at a 45 degree angle to encompass the following areas of the forefoot: (1) the area beneath the internal (medial) cuneiform and base of the first metatarsal bones; (2) the area diagonal to the longitudinal and transverse arches of the foot and shafts of the metatarsal bones; (3) the

U.S. Patent No. 11,375,768	Prior Art References
	areas beneath the five metatarsalphalangeal joints (the ball of the foot) and; (4) the area beneath all of the toes." '911 patent, 11:42-55. "In a medial and lateral half dual-density forefoot valgus compensation, the material employed on the lateral half of the forefoot is denser than the material used on the medial half of the forefoot." '911 patent, 11:64-68. An athletic shoe comprising a forefoot platform constructed of a second material having a gradient compression factor would have been obvious at the time of the alleged invention of the '768 patent in light of the knowledge, experience, training, and skill of a person of ordinary skill in the art at that time. It would have been obvious to a person of ordinary skill in the art to combine the teachings in each of the primary references in Exhibits N-Q with the above teachings because the references both provide teachings in the field of footwear design, both seek to solve similar problems and the results of the combinations would have been predictable to one of ordinary skill in the art. The use of the above teachings in the charted references would be nothing more than the use of known components to improve a similar apparatus in the same way. One of skill in the art would have been motivated to do so for the reasons identified by the above references, including to provide a more effective treatment of foot pronation and supination by providing a sole with different hardnesses, and a locally changing and specifically adapted density distribution, and a more even and gradual alteration of the weight-bearing gravitational forces as they are delivered and directed across the forefoot section of the footwear during the midstance and propulsive phases of gait.
1[e] wherein the forefoot platform, at the outer edge, has a first thickness at a position proximal to the heel platform and a second thickness at a toe portion, wherein the first thickness is greater than the second thickness.	An athletic shoe comprising a sole section wherein the forefoot platform, at the outer edge, has a first thickness at a position proximal to the heel platform and a second thickness at a toe portion, wherein the first thickness is greater than the second thickness was well known when the '768 patent was filed. To the extent Plaintiff argues that any reference fails to disclose this element, it would have been obvious to a person of ordinary skill based on the primary reference in view of any one of the references below. At least the following references disclose this element and would have been obvious to combine with the primary references in for the reasons discussed below: '768 patent - Admitted prior art:

U.S. Patent No. 11,375,768	Prior Art References
	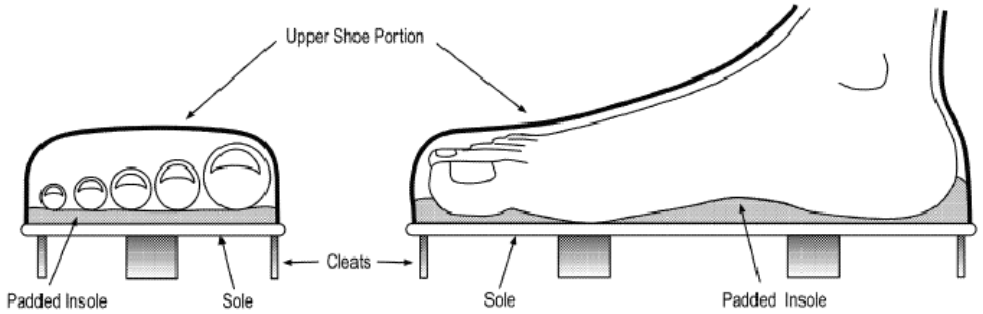 FIG. 1 Front Cross Section of Drive Leg Shoe Prior Art FIG. 2 Side Cross Section of Drive Leg Shoe "As another specific example, FIGS. 1 and 2 illustrate a cross sectional front view and a cross-sectional side view of a pair of baseball spikes. As is shown, the baseball spikes include a sole, a padded insole, an upper shoe portion, and cleats (or spikes). The positioning of the cleats facilitates better traction in grass and/or dirt while playing baseball. In these figures, the sole and/or the padded insole provide a relatively flat platform for the foot within the baseball spikes. In some designs of baseball spikes, the heel portion of the shoe may be higher than the toe portion of the shoe from a side perspective." '768 patent, 1:63-2:6.

U.S. Patent No. 11,375,768	Prior Art References
	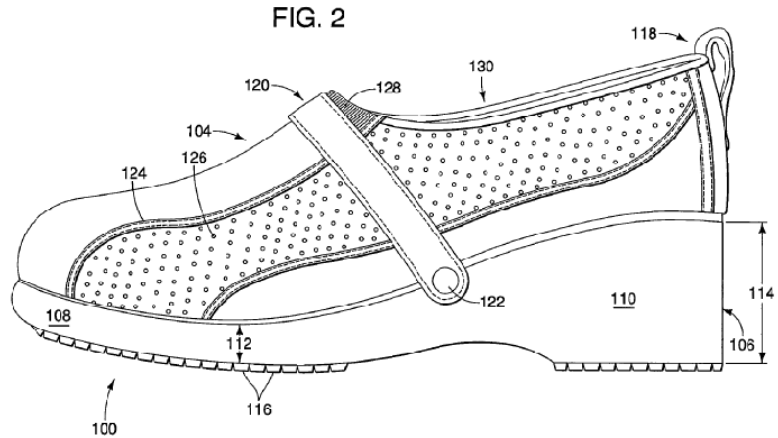 '307 publication, Fig. 2. "The shoe may position the foot such that the heel of the foot is elevated to a height above the front or toes of the foot. By elevating the heel of the foot above the toes, a golfer may be able to create the proper knee flex, while easing the weight transfer needed to make an athletic move, thereby enhancing contact and swing." '307 publication, [0012] "With the shoe FIG. 2, 100 the golfer may improve over a standard golf shoe, the ability to maintain a more effective weight distribution (e.g., weight on the heels during upswing and on the toes during downswing), spine angle, and knee flex during the set up and throughout the golf swing. For example, as the body turns into the backswing and the weight shifts back into the heels of the foot, the elevated heel of the shoe FIG. 2, 100 may create a solid foundation for the golfer's weight. The angle of the shoe, slanting down from the back to the front, may facilitate weight transfer from the heels to the toes at impact. The elevation and support provided by the shoe may compensate for any lack of flexibility, strength, and/or consistency in, for example, amateur players, older players, less athletic players, and others." '307 publication, [0017]

U.S. Patent No. 11,375,768	Prior Art References
	"The shoe 100 may, by improving the performance of golfers, including less athletic, experienced, or traditional golfers, make the game of golf accessible and enjoyable to a wider range of individuals. For example, elevating the heel at impact may improve the golfer's ability to make a stronger move at the ball 14 on the downswing which may result in improving the golfer's contact with the ball 14. Additionally, the elevated heel of the shoe 100 may create flex in the knees which may further create torque during the backswing and may eliminate locking of the back leg. The knee flex and resulting torque may allow the golfer to assume a more athletic position to make a stronger move toward the ball 14 than if the weight was maintained differently, for example, with both feet flat on the ground or weight positioned more heavily on either front or back foot." '307 publication, [0018] "The shoe FIG. 2, 100 may also prove useful to seasoned golfers who are seeking to improve their foot stance and thus, their swing. Placing the weight on the front of the feet is an unnatural activity. As such, golfers often forget and stand flat footed as they swing. The result is a less than ideal swing. When out on the golf course or practice range, it is not practical to place an object under the foot to approximate the appropriate stance for every swing. Due to changes in surface contours and surface type, a golfer often changes the position of his/her feet several times prior to swinging. Using foreign objects under the shoe is useful only when practicing and not permitted during actual play." '307 publication, [0019] 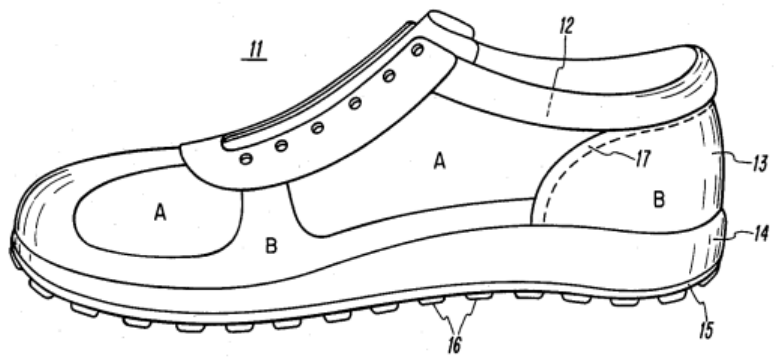 FIG. 1

U.S. Patent No. 11,375,768	Prior Art References
	"Midsole member 14 is preferably comprised of a flexible, resilient material such as crepe or rubber for cushioning the shock resulting from the impact of the foot on the ground during physical exercise. Tread material 15 is preferably comprised of a hard rubber material for durability and includes a plurality of cleats or studs 16 for providing traction during physical exercise. Attached to upper member 13 in the heel portion of shoe 11 is a heel counter 17 which is preferably comprised of a light-weight plastic or polypropylene material, for providing comfort and support for the wearer in the heel region." '126 patent, 5:29-40. 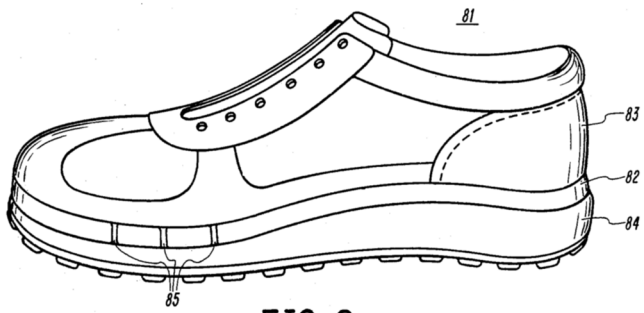 FIG. 8a By making orthodic member 82 substantially thicker on the medial side, as shown in FIG. 8C, excessive pronation is thereby counteracted and the risk of injury reduced. '126 patent, 9:6-9.

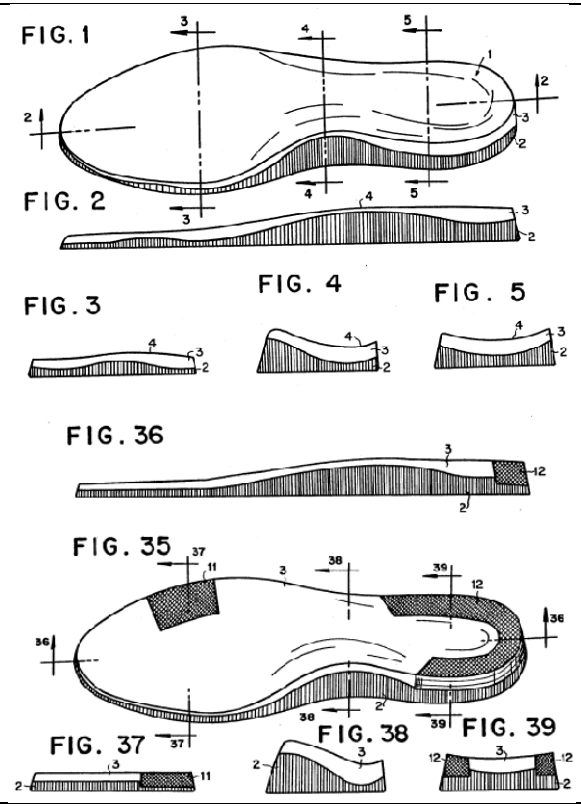
FIG. 1
FIG. 2
FIG. 3
FIG. 4
FIG. 5
FIG. 36
FIG. 35
FIG. 37
FIG. 38
FIG. 39

U.S. Patent No. 11,375,768	Prior Art References
	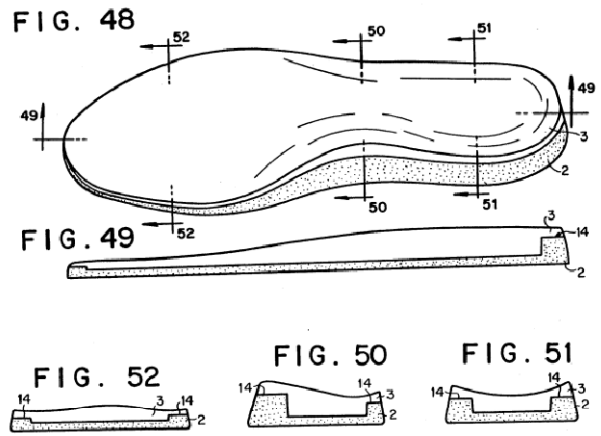 '573 patent, Figs. 1-5, 36-39, 48-51; 7:16-18. "historically, shoe bottoms [] consisted primarily of flat surfaces on both their top and bottom." '573 patent, 1:10-27. "In order to provide a more continuous upper surface and provide padding between the stabilizing inserts and the foot, the upper layer may extend over the stabilizing inserts (FIGS. 40-44). As is seen in FIG. 40, a heel insert 12 extends upward from the lower layer to provide additional support at the outer marginal portions of the heel (FIG. 44). This insert is covered by a portion of upper layer 3 to pad the insert slightly without substantially diminishing the support provided by the insert to the heel. Similarly, insert 11 of FIG. 42 provides support to the ball of the foot and is padded by upper layer 3." '573 patent, 9:1-12. "FIGS. 48-67 show alternate embodiments of the present invention. As is seen in FIGS. 48-52 the contour of the lower layer may be provided by a single step 14 change in height about the perimeter. Beneath the arch the step is higher than around the toe portion of the shoe bottom." '573 patent, 9:18-23.

U.S. Patent No. 11,375,768	Prior Art References
	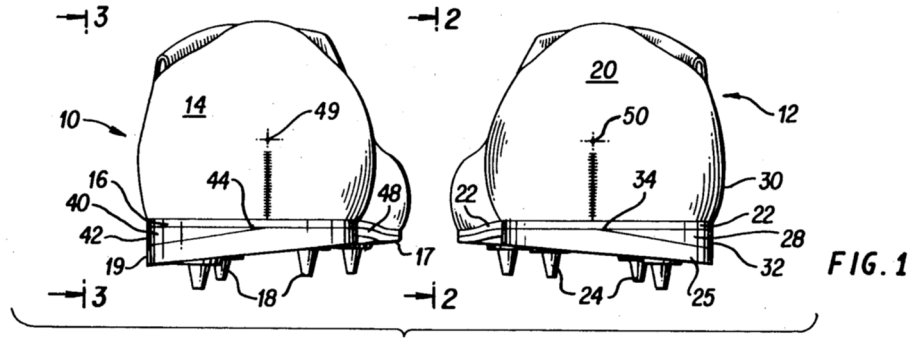 FIG. 1 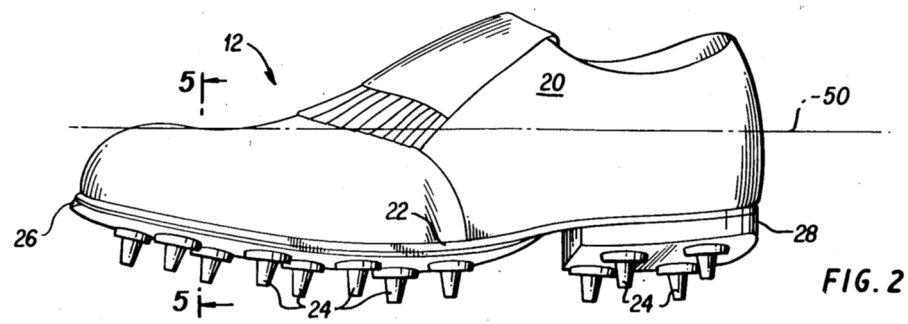 FIG. 2

U.S. Patent No. 11,375,768	Prior Art References
	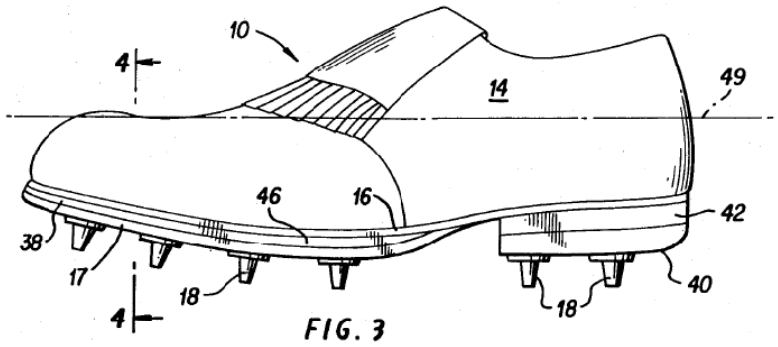 ‘809 patent, Figs. 1-3. ““The present invention relates to an improved golf shoe for assisting in the maintenance of proper weight distribution when worn during a golf swing, that is to keep a golfer's weight on the balls of his feet when swinging the club. In this context the "balls of the feet” means the area on each foot which is immediately inwardly of the base of the big toe.” ‘809 patent, 2:40-47. “The functional result of the improved golf shoe of this invention is to elevate the outermost edge of the golfer's rear-most foot upon assuming the proper stance for striking the golf ball. The improved golf shoe construction will cause the golfer's weight to shift inwardly and forwardly to the balls of the feet. Actual utilization of shoes constructed in accord with this invention has confirmed that this concentration of weight toward the balls of the golfer's feet significantly reduces the tendency of the golfer to pull away from the ball during the golf swing. The attendant results are normally a more consistent wing and greater accuracy.” ‘809 patent, 3:35-46. As clearly seen in the views of FIGS. 1 and 2, the height, or vertical thickness, of both wedge members 26 and 28 is greatest adjacent outside edge 30 of shoe 12 and at a minimum near the center of the width of the shoe along the longitudinal center line 50. That is to say, referring to the view of FIG. 1, the height of outside 32 of second member 28 is greater than the inside 34 of second member 28. As shown in FIG. 5 the corresponding height of the outside 32' of first wedge member 26 is also greater than the height of the inside 36 of member 26 and, preferably, is slightly greater or substantially equal to the outside height 32 of heel

U.S. Patent No. 11,375,768	Prior Art References
	wedge 28. By virtue of this improved construction of shoe 12, when worn by a right-handed golfer upon addressing a golf ball to be hit, the golfer's weight will be shifted toward the ball of his right foot. '809 patent, 4:32-48. 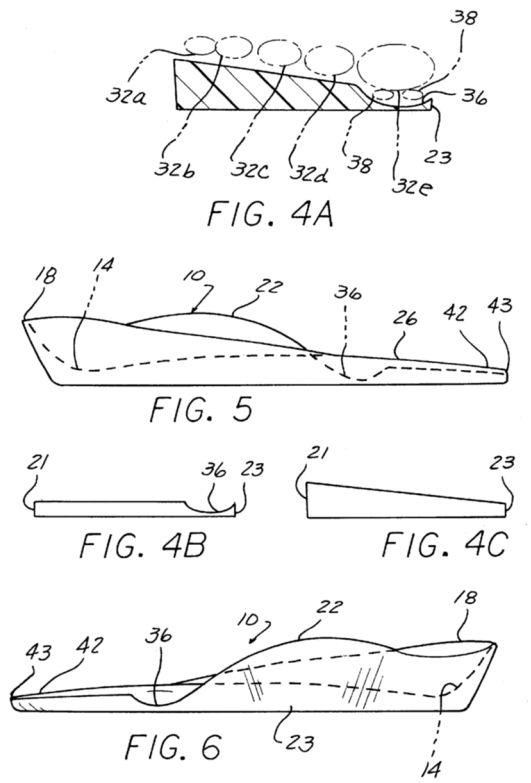 Looking especially at FIGS. 4A-C, the elevation of the lateral aspect of the forefoot 26 of the insert is a unique aspect of the invention. There is a Valgus wedge 28 that starts at the transverse arch region 30 (shown in FIG. 3) at a mid-foot portion of the insert Spaced from the heel and increases in elevation gradually, distally. The transverse arch region 30, as shown in the figures, underlies the transverse arch located at the anterior part of the tarsus and hinder part of the metatarsus of the foot. AS can be seen in FIG. 4A, the most prominent point in the elevation is located in the approximate region of the fifth metatarsal

U.S. Patent No. 11,375,768	Prior Art References
	head 32a, decreasing in elevation near the sulcus region 34 between the toes and the metatarsal heads 32a, b, c, d, e. The wedge 28 also decreases proportionately in elevation from the lateral to medial aspect of the device as shown in FIG. 4C. The lateral aspect is shown in FIG. 5 with the lateral edge designated at 21 and the medial aspect is shown in FIG. 6 with the medial edge designated at 23. '301 patent, 3:18-35. 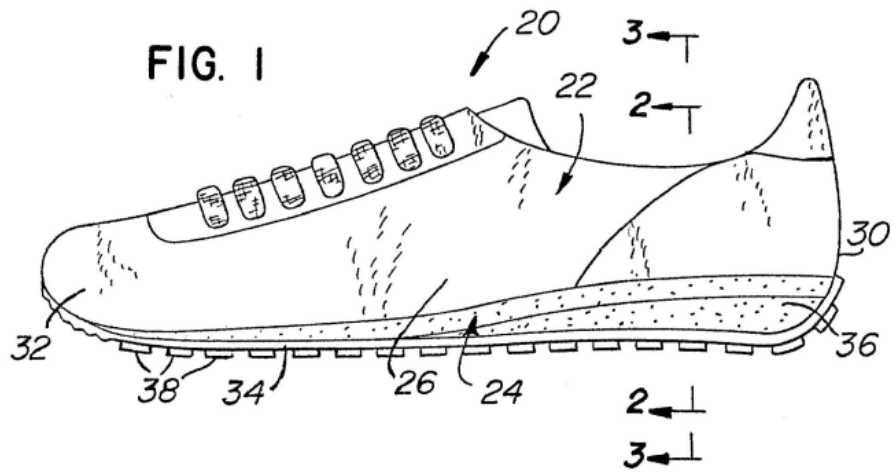 EP '366 patent, Fig 1. "As is conventional, the midsole 36 is thicker under the heel of the upper and tapers downward longitudinally under the arch toward the forefoot area, to provide the necessary heel lift or elevation for comfortable, safe running." EP '366 patent, 6:8-12.

U.S. Patent No. 11,375,768	Prior Art References
	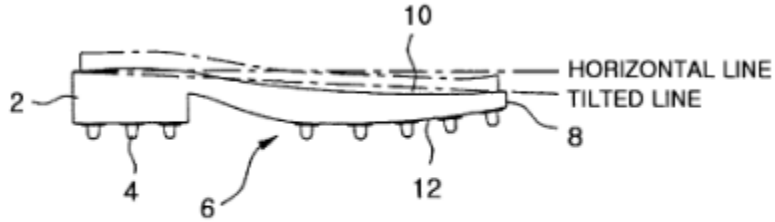 FIG. 6 '151 patent, Fig 6. "FIG. 6 is a cross sectional view illustrating the sole of a conventional golf shoes. As shown in FIG. 6, conventional golf shoes have plural spikes (4) on their soles (6), and the sole (6) is divided into a heel portion (2) and a toe portion (8). The bottom surface of the heel portion and the bottom surface (12) of the toe portion (8) are almost in parallel or the bottom surface (12) of the toe portion (8) is formed to be a little bit lower than the bottom surface of the heel portion (2). As shown in FIG. 6, it is known that the upper surface of an intermediate metatarsal portion (10) of the toe portion of the sole is formed to be lower than that of the heel portion." '151 patent, 1:42-54.

U.S. Patent No. 11,375,768	Prior Art References
	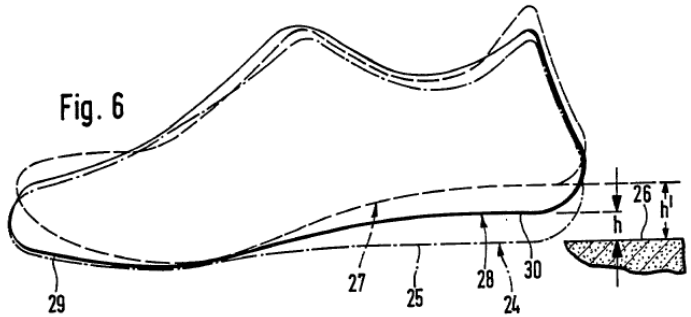 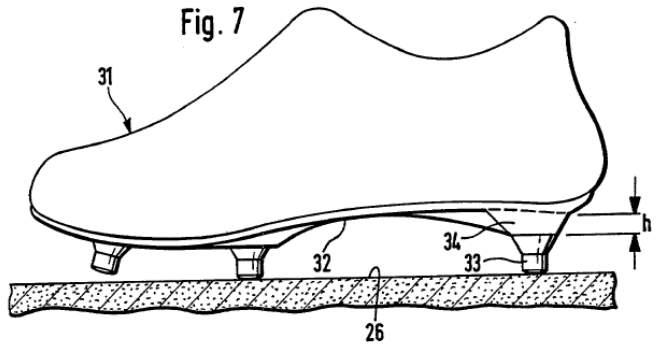 DE '563 patent, Figs. 6-7. "In Fig. 6, the dash-dotted line shows a conventional soccer shoe last 24 , the sole surface 25 of which is essentially flat and level (parallel to the ground 26). A "detonation" is not provided in this last 24 either in the heel or in the toe area. ("Explosion" in the case of a last is to be understood as the height difference between the tip of the shoe or the heel and the ball of the foot (lowest point). In the case of a shoe produced using such a last 24 , the result is a flat foot position, as also in Sports shoes are common for long-distance runners.

U.S. Patent No. 11,375,768	Prior Art References
	The dashed line denotes a last 27 of a sprint or jumping shoe that athletes use who have to perform an unusual jumping or acceleration performance at very short notice. A very high "detonation" can be seen both in the toe area and in the heel area. In the heel area, the blasting is shown as an increase h 'of the heel relative to the floor 26. The last 27 brings the foot into a rolling position from the outset and shortens the Achilles tendon due to the raised heel. Both, ie "tip and heel detonation" make the muscles react quickly and thus enable the athlete to jump and accelerate for a short time. The last 27, however, is not suitable for shoes by athletes, such as soccer players, who have to do intensive mileage over a long period of time. Finally, the solid line in FIG. 6 denotes a last 28 with the features of the invention. The last 28 has no heel in the toe region 29 , but an heel in the heel region 30 , which is illustrated by the distance h from the floor 26 . A comparison with the last 27 shows that the heel drop (h) in the last 28 according to the invention is only about half as large as in the last 27 (see the dimension h 'there). The last 28 according to the invention enables the production of a soccer shoe which allows the player to achieve an intensive mileage over 90 minutes (and longer), but at the same time also enables him to jump and accelerate. An embodiment of such a soccer shoe according to the invention is shown in Fig. 7 and numbered 31 in total. Because of the heel blast h there is a need to provide a corresponding height (h) between the sole 32 and the cleat 33 , which is denoted by 34 in FIG. 7." DE '563 patent, mechanical translation, p. 4.

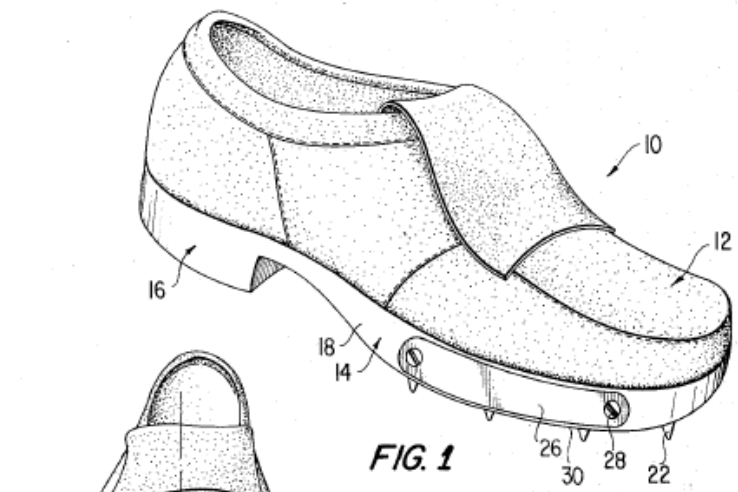

FIG. 1

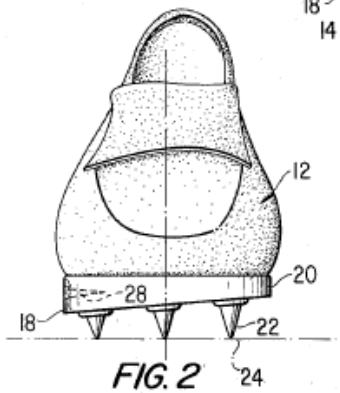

FIG. 2

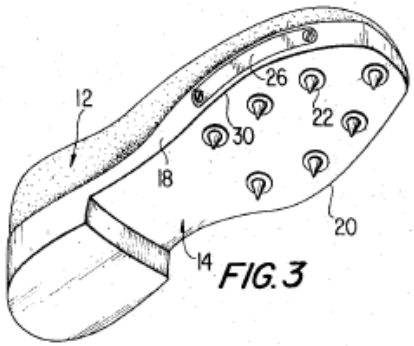

FIG. 3

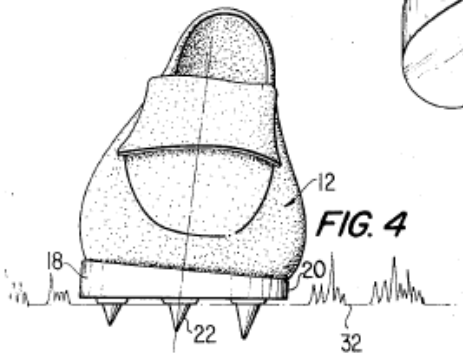

FIG. 4

U.S. Patent No. 11,375,768	Prior Art References
	'523 patent, Figs. 1-4. "A conventional heel 6 is also molded integrally with sole 14." '523 patent, 2:67-68. 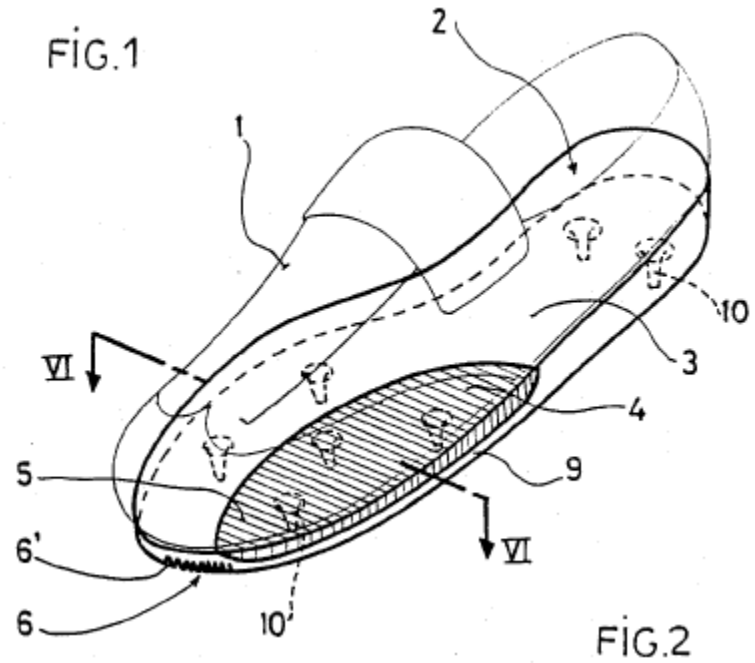

U.S. Patent No. 11,375,768	Prior Art References
	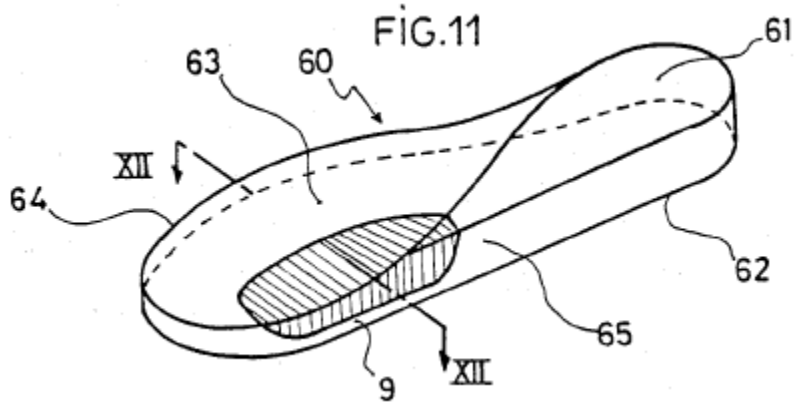 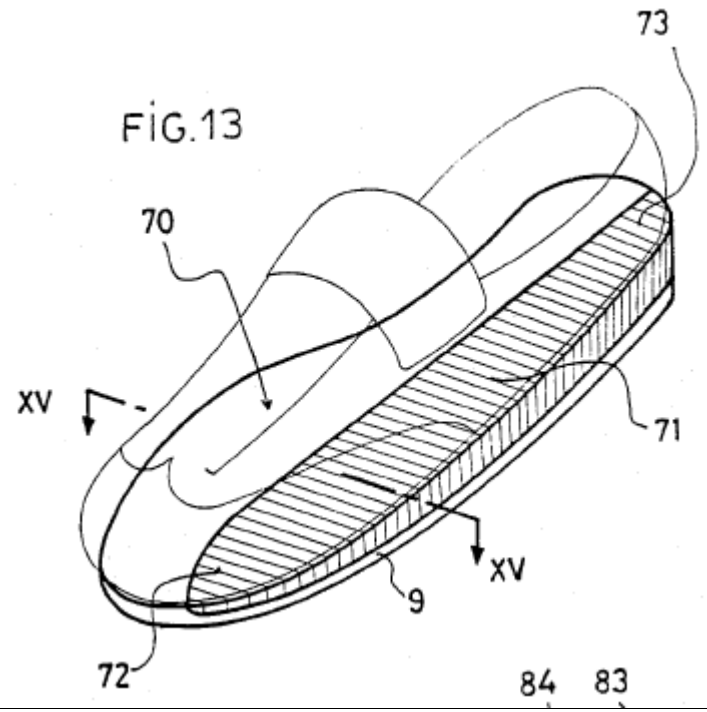

U.S. Patent No. 11,375,768	Prior Art References
	‘561 patent, Figs. 1, 11, 13. “Provision is also made (FIGS. 11 and 12) for the sole 60 to furnish a transverse seating for the foot, having variations in the plantar support surface. As such, the plantar support zone 61 at the level of the heel remains substantially parallel to the walking surface 62, while the support surface 63 in the front area of the foot is inclined upwards from the inner edge 64 towards the outer edge 65. According to another embodiment, illustrated in FIG. 13, the sole 70 is provided with a shock absorbing element 71 which extends substantially from the front part 72 occupied by the 3rd, 4th and 5th phalanges of the foot up to the heel zone 73; this element 71 has a variable thickness so that the front part 72 is thinner than the part at the heel 73. In this example, the thick ness of the sole 70, seen in elevation in its longitudinal direction, also increases as it goes towards the heel Zone 73.” ‘561 patent, 5:7-23.

FIG. 1

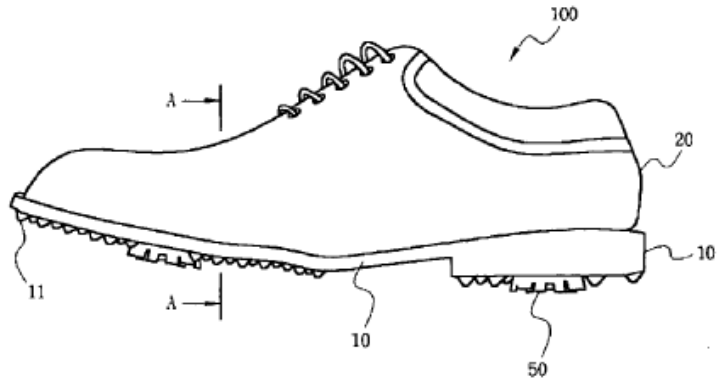

FIG. 2

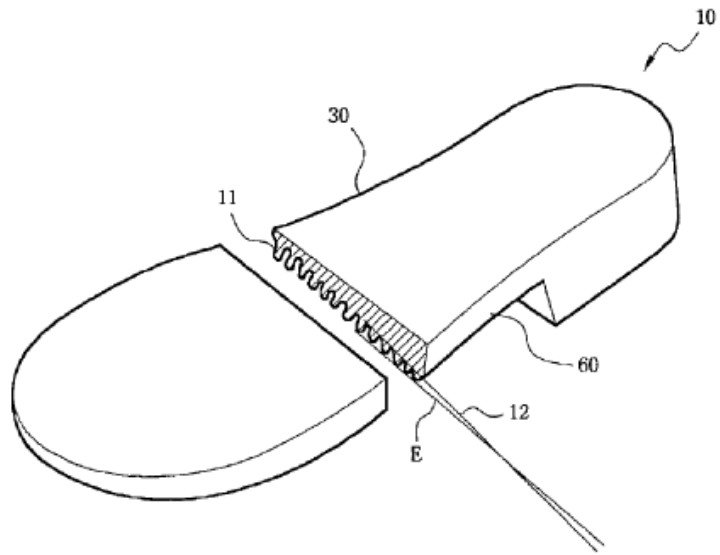

U.S. Patent No. 11,375,768	Prior Art References
	'181 Publication, Figs. 1-2. 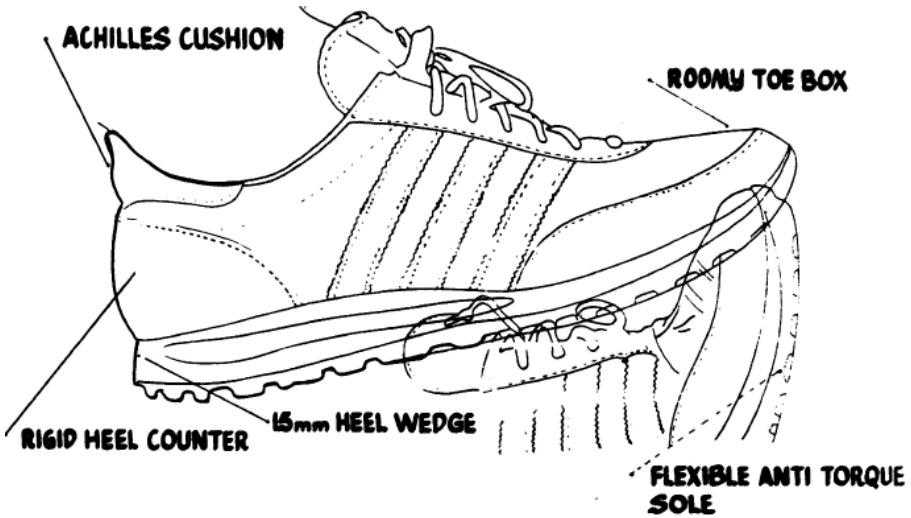 "Current shoe technology has made important contributions to the prevention of injury from running. A roomy toe box and absence of prominent stitching can help avoid subungual hematomas, blisters and corns. The mid sole is important in providing shock absorption and flexibility. Waffle style outer sole can be effective in dampening torque force. Achilles tendon injury and gastrocnemius muscle strain can be prevented by an adequate heel wedge of 12-15 mm and a solid heel counter to stabilize the calcaneus. Heel counter cushions can be successful in reducing the incidence of retrocalcaneal bursitis (see Fig. 2)." A Guide to the Prevention of Running Injuries, Clement et al, April 1980, pp. 547-48. An athletic shoe comprising a sole section wherein the forefoot platform, at the outer edge, has a first thickness at a position proximal to the heel platform and a second thickness at a toe portion, wherein the first thickness is greater than the second thickness would have been obvious at the time of the alleged invention of the '768 patent in light of the knowledge, experience, training, and skill of a person of ordinary skill in the art at that time. Providing a drop in height from the heel of the shoe to the toe was common in shoe design

U.S. Patent No. 11,375,768	Prior Art References
	for well before the fling of the '768 patent, and it would have been obvious to a person of ordinary skill in the art to combine the teachings in each of the primary references in Exhibits N-Q with the above teachings because the references both provide teachings in the field of footwear design, both seek to solve similar problems and the results of the combinations would have been predictable to one of ordinary skill in the art. The use of the above teachings in the charted references would be nothing more than the use of known components to improve a similar apparatus in the same way. One of skill in the art would have been motivated to do so for the reasons identified by the above references, including to provide additional comfort and/or stability in the shoe.
2. The athletic shoe of claim 1, wherein the forefoot section comprises: a mid-foot section; and a toe section proximal to the mid-foot section.	The primary references all disclose a forefoot section comprising a mid-foot section and a toe section proximal to the mid-foot section.
3. The athletic shoe of claim 1, wherein the second material comprises: a resilient material of varying density to provide a compressible gradient to provide the gradient compression factor.	An athletic shoe comprising a sole section wherein the second material comprises a resilient material of varying density to provide a compressible gradient to provide the gradient compression factor was well known when the '768 patent was filed. To the extent Plaintiff argues that any reference fails to disclose this element, it would have been obvious to a person of ordinary skill based on the primary reference in view of any one of the references below. At least the following references disclose this element and would have been obvious to combine with the primary references in for the reasons discussed below: "Thus, it is an object of the present invention to provide a sole unit for shoes, in particular for sport shoes, that can be produced in a simple and, therefore, convenient manner with respect to the production technology, and still allow a predetermined density variation in a transverse and/or longitudinal direction over a complete area of the sole element. One aspect of one embodiment of the present invention is to not use two different materials with different densities to create the density variation over the sole element and to connect these materials subsequently, but to use a single material being supplied as a preform and having a thickness distribution that is transformed by pressure forming into the desired density distribution." '428 patent, 3:3-15.

U.S. Patent No. 11,375,768	Prior Art References
	"In one aspect, an embodiment of the invention relates to a method of manufacturing a sole element for a shoe, where the sole element has a varying density distribution in at least one direction, for example a transverse and/or longitudinal direction. The method includes manufacturing a sole element preform from a polymer material with a thickness varying in the transverse and/or longitudinal direction depending on the specific density distribution desired and press-forming the sole element preform in a forming tool to form the finished sole element from the sole element preform. In one embodiment, the finished sole element has a substantially constant thickness in at least one transverse direction. Additionally, the sole element preform may be subjected to a non-uniform compression during the press-forming step." '428 patent, 3:33-15. "In another aspect, an embodiment of the invention relates to a method of manufacturing a sole element for a shoe, where the sole element has a varying density distribution in at least one direction, for example a transverse and/or longitudinal direction. The method includes manufacturing a sole element preform from a polymer material and press-forming the sole element preform in a forming tool with a selective supply of heat to single sections of a surface of the tool to locally selectively expand the sole element preform to form the finished sole element with the desired density distribution from the sole element preform." '428 patent, 3:46-56. 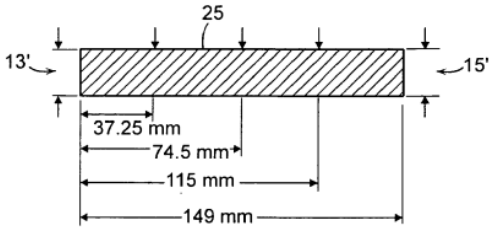 FIG. 4B "If such a preform 20 is formed in a conventionally known forming tool, the sole element 25, as shown in FIGS. 4A and 4B, is obtained. As depicted in FIG. 4A, the sole element 25 has a width a′ of about 149 mm, a length b′ of about 250 mm and a constant height h′ of about 13 mm. FIG. 4B shows again a vertical section through the finished sole element 25 in accordance with the invention. If the hardness of the resulting sole element 25 is measured with reference to the distance from the left side 13′, the following values shown in Table 2 are obtained:

U.S. Patent No. 11,375,768	Prior Art References
	TABLE 2 Hardness distribution of the shaped sole unit from the medial side 13′ to the lateral side 15′ in one embodiment DISTANCE FROM THE MEDIAL SIDE [MM] HARDNESS [C] 0 60.0 37.25 57.5 74.50 55.0 115.0 52.5 149.0 50.0” ’428 patent, 7:36-58. “As can be seen, the hardness (measured in Shore C) decreases from about 60 C to about 50 C. Therefore, a reduction of about 10 C is obtained (i.e., in the range of about 15% to 20%), if the preform 20 is as described in Table 1 and consists of polyurethane.” ’428 patent, 7:60-64. “The locally varying hardness of the sole unit 25 can be explained by the surplus of material on the left side 13, which is compressed more than the material on the right side 15 during the final forming step in such a way that a continuously varying density distribution is obtained in the sole unit 25. The resulting density, in turn, influences the hardness and therefore the elasticity of the sole unit 25.” ’428 patent 8:12-18.

U.S. Patent No. 11,375,768	Prior Art References
	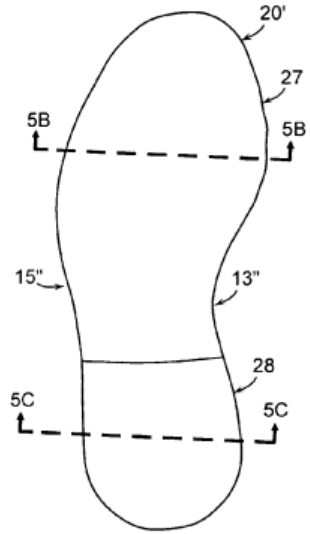 FIG. 5A 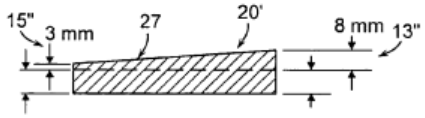 FIG. 5B 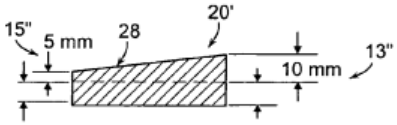 FIG. 5C "FIGS. 5A-5C show an alternative embodiment of a preform 20′ in accordance with the invention. This preform 20′ having already the shape of a sole has the special feature that the height does not only vary from

U.S. Patent No. 11,375,768	Prior Art References
	the medial (formerly left) side 13″ to the lateral (formerly right) side 15″, but also from the rear foot part 28 to the forefoot part 27. The sections along the line 5B-5B (FIG. 5B) and the line 5C-5C (FIG. 5C) show that the surplus of height in the forefoot part 27 is about 8 mm on the medial side 13″ and about 3 mm on the lateral side 15″; whereas, in the rear foot part 28, the surplus is about 10 mm on the medial side 13″ and about 5 mm on the lateral side 15″. With such a preform 20′, a modulation of the density and, therefore, of the hardness is not only obtained from the medial side 13″ to the lateral side 15″, but also from the rear foot part 28 to the forefoot part 27." '428 patent, 8:19-33. An athletic shoe comprising a sole section wherein the second material comprises a resilient material of varying density to provide a compressible gradient to provide the gradient compression factor would have been obvious at the time of the alleged invention of the '768 patent in light of the knowledge, experience, training, and skill of a person of ordinary skill in the art at that time. It would have been obvious to a person of ordinary skill in the art to combine the teachings in each of the primary references in Exhibits N-Q with the above teachings because the references both provide teachings in the field of footwear design, both seek to solve similar problems and the results of the combinations would have been predictable to one of ordinary skill in the art. The use of the above teachings in the charted references would be nothing more than the use of known components to improve a similar apparatus in the same way. One of skill in the art would have been motivated to do so for the reasons identified by the above references. For example, the use of a single material to provide variable compressibility offers several advantages over use of two separate materials. It is simpler and more convenient, eliminates subsequent problems of the interconnection of different sole elements, and the complete sole element can be finished in a single production step.
4. The athletic shoe of claim 3, wherein the resilient material comprises one or more of: a rubber, a gel, a foam, a synthetic material.	The primary references all disclose a resilient material comprising one or more of: a rubber, a gel, a foam, or a synthetic material.

U.S. Patent No. 11,375,768	Prior Art References
5. The athletic shoe of claim 1, wherein the second material comprises: a plurality of materials configured to provide a shape of the forefoot platform and to provide the gradient compression factor, wherein a first material of the plurality of materials is one of a foam, a soft rubber, memory foam, a housing that holds a liquid, and a material that compresses under pressure and substantially returns to its uncompressed shape when the pressure is removed.	The primary references all disclose an athletic shoe where the second material comprises a plurality of materials configured to provide a shape of the forefoot platform and to provide the gradient compression factor, wherein a first material of the plurality of materials is one of a foam, a soft rubber, memory foam, a housing that holds a liquid, and a material that compresses under pressure and substantially returns to its uncompressed shape when the pressure is removed.
8. The athletic shoe of claim 1, wherein the sole section comprises: an insole; a mid-sole; and an out-sole.	The primary references all disclose a sole section comprising an insole, a mid-sole, and an out-sole.