US010660473B2

(12) **United States Patent**
Dahle et al.

(10) **Patent No.: US 10,660,473 B2**
(45) **Date of Patent: May 26, 2020**

(54) **SYSTEM, DEVICE AND METHOD FOR CONTROLLING CONVECTIVE HEATING OF A GRIDDLE**

(71) Applicant: **North Atlantic Imports, LLC**, North Logan, UT (US)

(72) Inventors: **Roger Dahle**, Providence, UT (US); **Ryan D. Sharp**, American Fork, UT (US)

(73) Assignee: **North Atlantic Imports, LLC**, Logan, UT (US)

(*) Notice: Subject to any disclaimer, the term of this patent is extended or adjusted under 35 U.S.C. 154(b) by 426 days.

(21) Appl. No.: **15/582,682**

(22) Filed: **Apr. 29, 2017**

(65) **Prior Publication Data**

US 2017/0332839 A1 Nov. 23, 2017

Related U.S. Application Data

(60) Provisional application No. 62/331,673, filed on May 4, 2016.

(51) **Int. Cl.**

A47J 37/06	(2006.01)
F24C 15/32	(2006.01)
H05B 6/64	(2006.01)
A21B 1/24	(2006.01)
F24C 3/14	(2006.01)
F24C 15/12	(2006.01)

(52) **U.S. Cl.**

CPC ***A47J 37/0682*** (2013.01); ***F24C 15/322*** (2013.01); ***H05B 6/6473*** (2013.01); *A21B 1/245* (2013.01); *F24C 3/14* (2013.01); *F24C 15/12* (2013.01)

(58) **Field of Classification Search**

CPC A47J 37/0682; F24C 15/322; F24C 15/12; F24C 3/14; A21B 1/245; H05B 6/6473

See application file for complete search history.

(56) **References Cited**

U.S. PATENT DOCUMENTS

1,201,138	A	10/1916	Bingham	
1,447,813	A	3/1923	Patrick	
4,715,356	A *	12/1987	Reynolds	F24C 3/067 126/214 R
5,349,899	A	9/1994	Tominaga et al.	
5,676,043	A	10/1997	Best	
6,389,960	B1	5/2002	Williams et al.	
7,348,519	B2	3/2008	Federspiel et al.	
D604,098	S	11/2009	Hamlin	
D694,056	S	11/2013	Dahle	
9,119,500	B2	9/2015	Hamlin	
2008/0223359	A1	9/2008	Huang	
2010/0083949	A1	4/2010	Lisheng	
2010/0199857	A1	8/2010	Storiz et al.	
2014/0161952	A1	6/2014	Sykes	

* cited by examiner

Primary Examiner — Alfred Basichas
(74) *Attorney, Agent, or Firm* — David L. Stott

(57) **ABSTRACT**

Devices, systems, and methods for maintaining convection heat within a heating region of a griddle and channeling the convection heat therefrom. The griddle includes a ribbing structure along its underside surface in a configuration that cooperates with the burners of a cooking station. Such ribbing structure allows a user to control the convective heating of the griddle as desired and channels the convective heat to a single side of the griddle, away from the user.

20 Claims, 5 Drawing Sheets

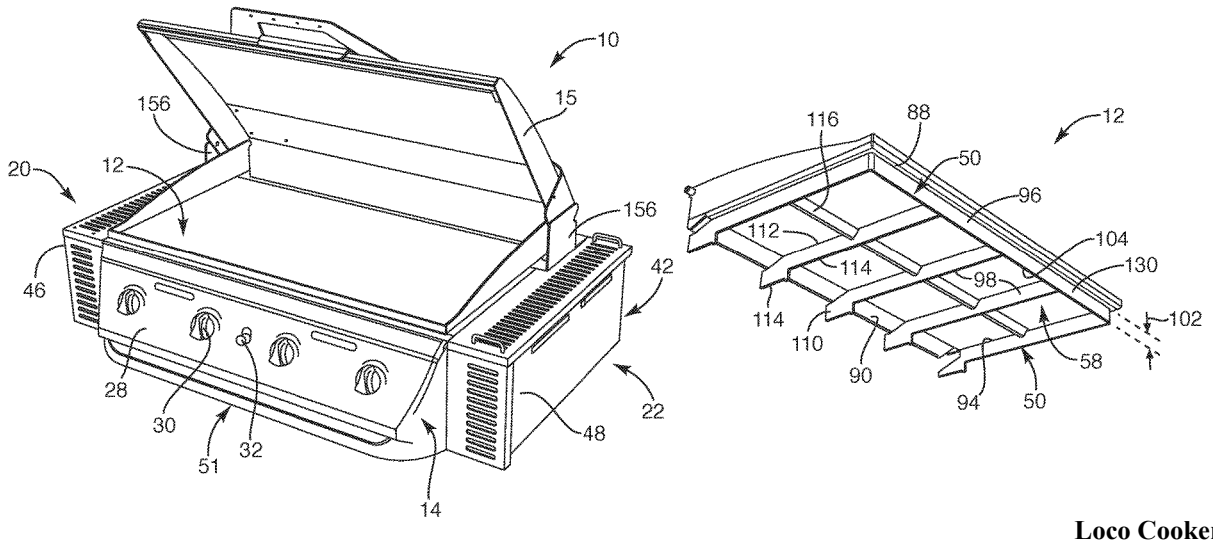

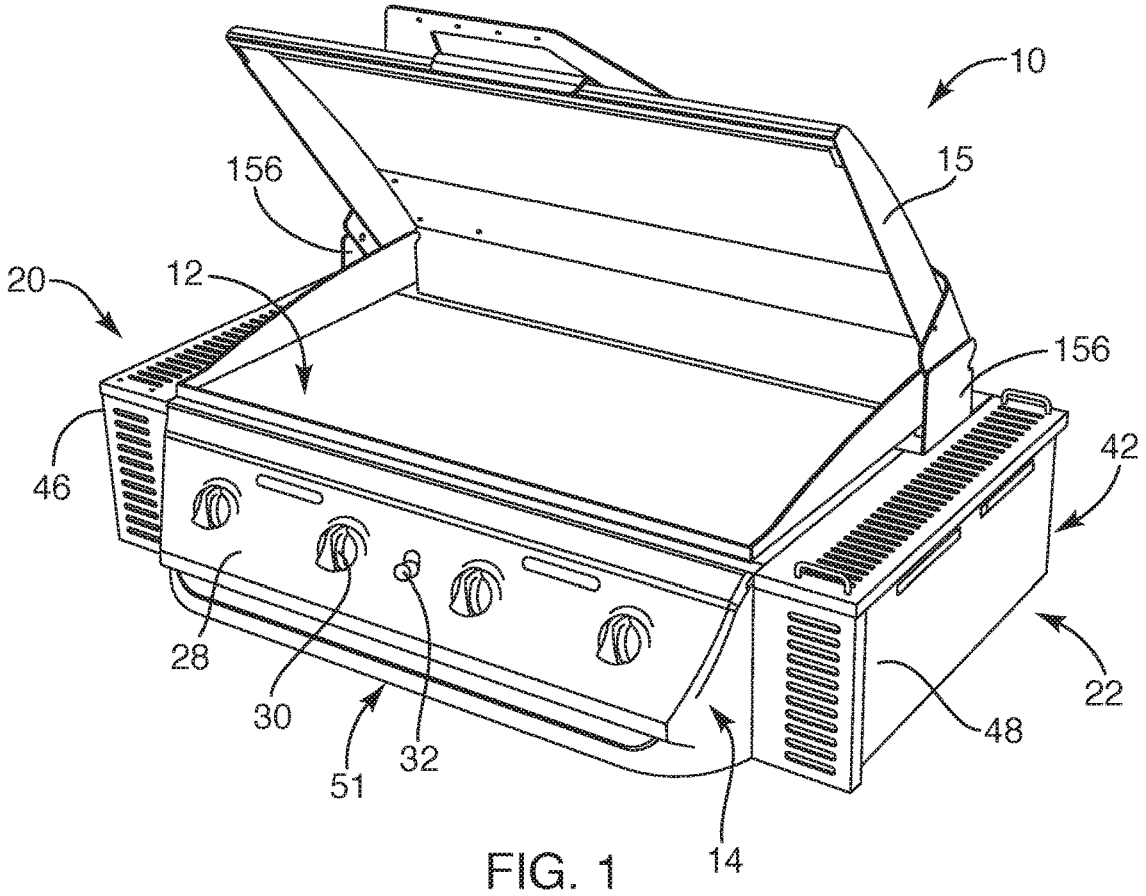
10
15
156
20
12
156
46
42
28
30
32
22
51
48
14

FIG. 1

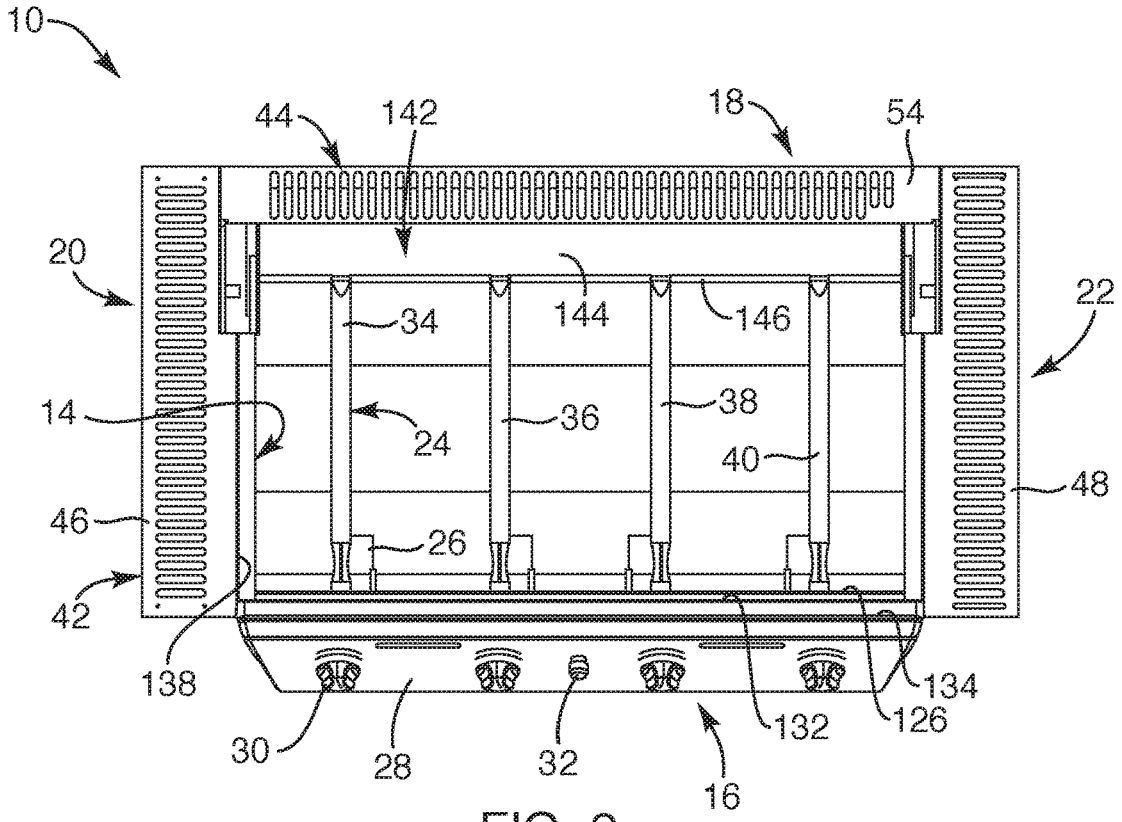
10
44
142
18
54
20
144
146
22
34
14
24
36
38
40
48
46
26
42
138
134
132
126
30
28
32
16

FIG. 2

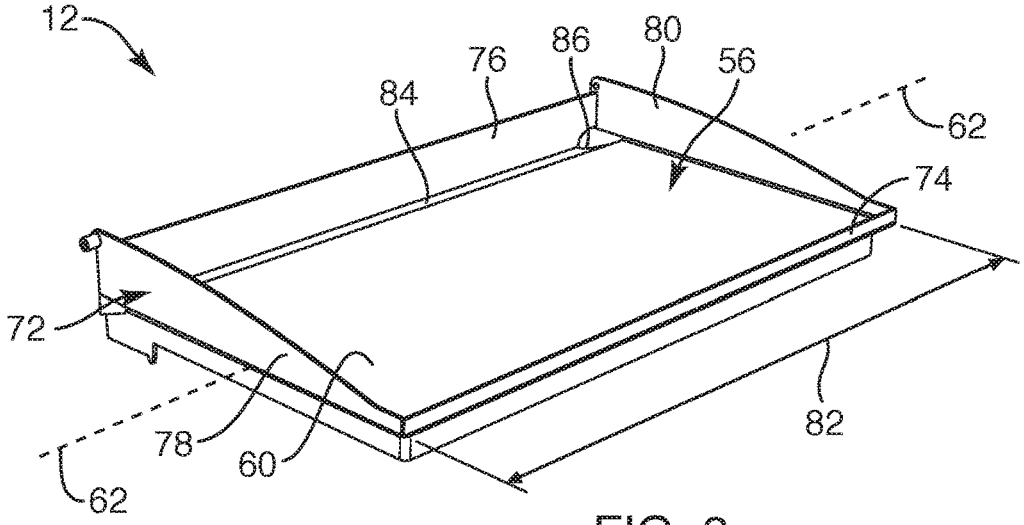

FIG. 3

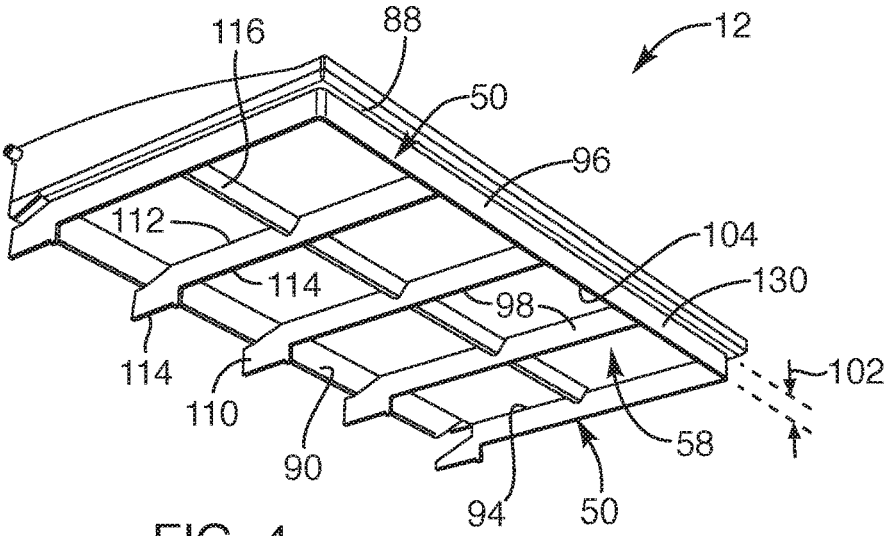

FIG. 4

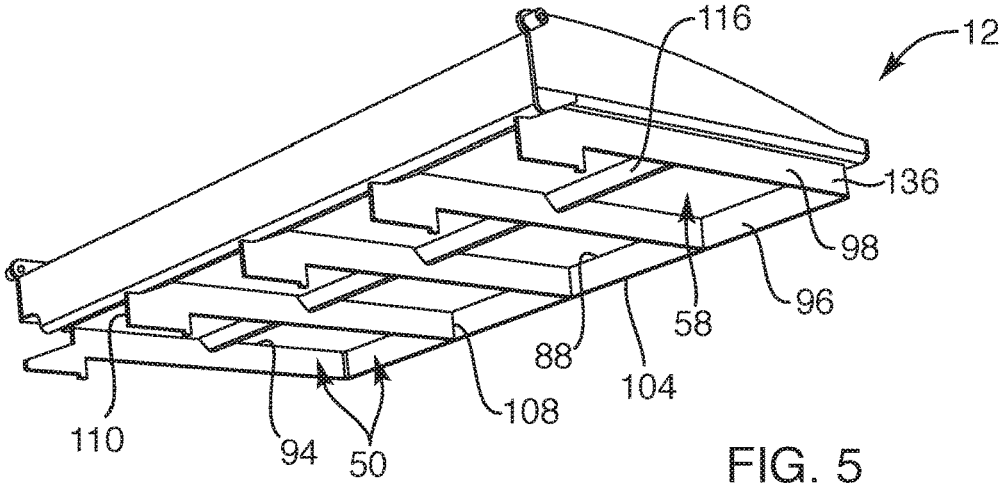

FIG. 5

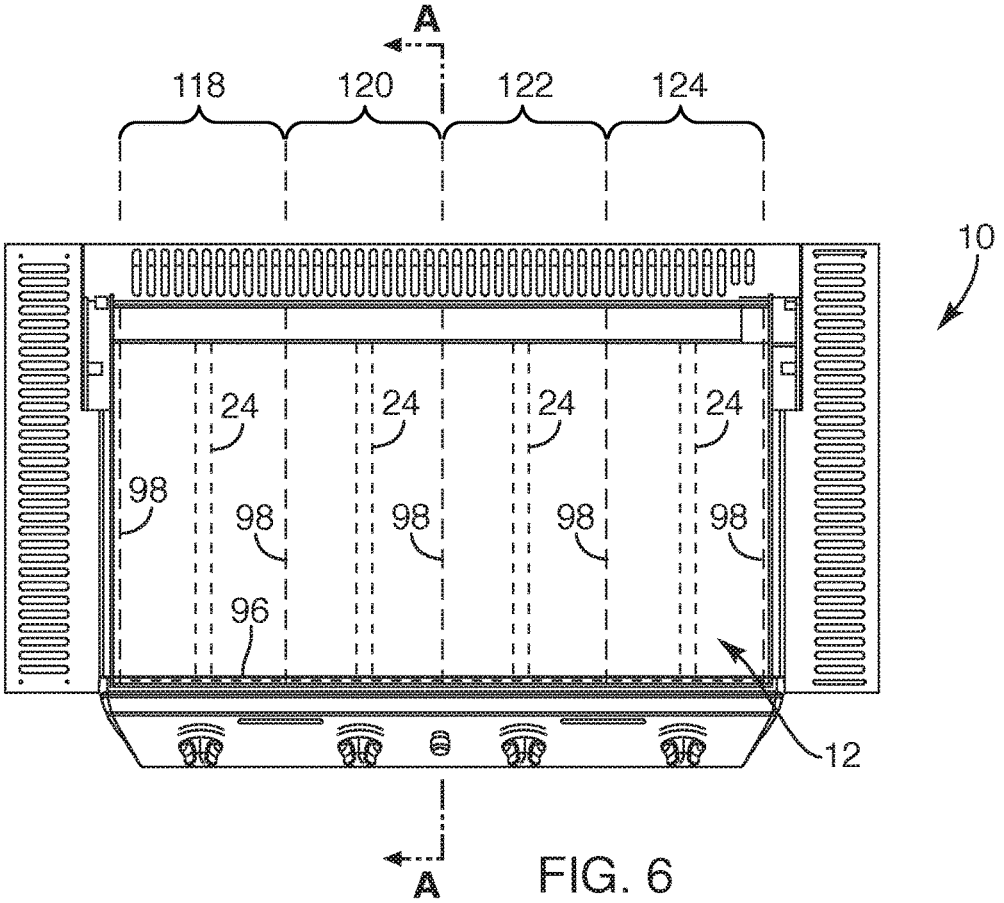
A
118
120
122
124
10
24
24
24
24
98
98
98
98
98
96
12
A

FIG. 6

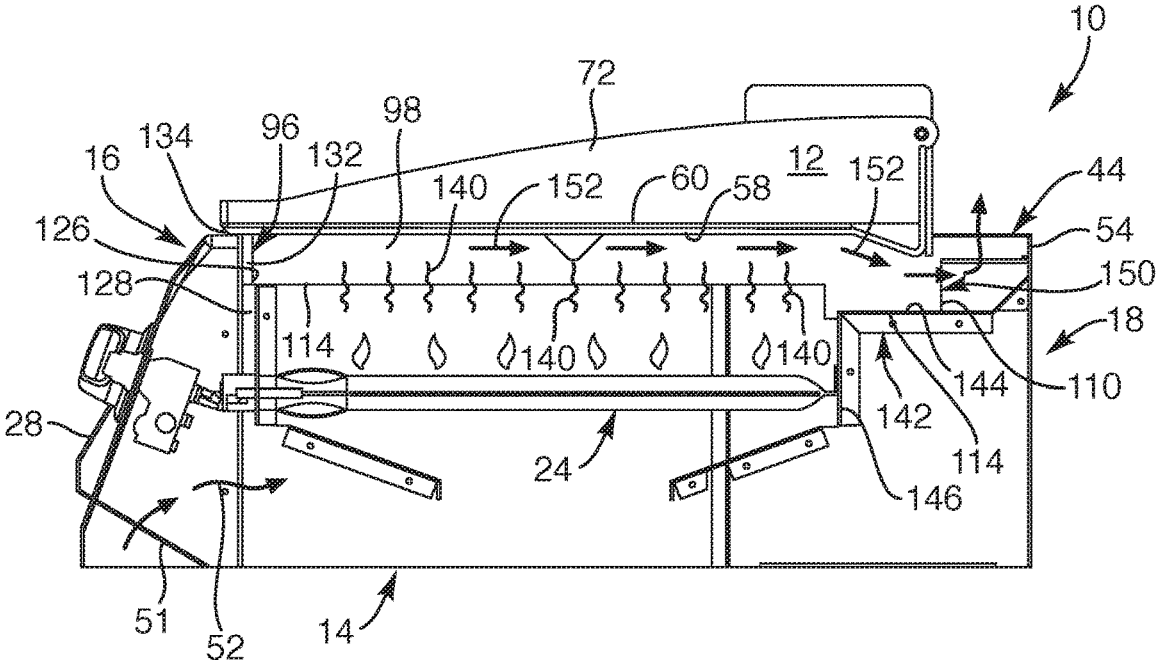
10
72
16
134
96
98
132
12
152
44
126
140
152
60
58
54
128
150
18
114
140
140
144
110
28
142
114
24
146
51
52
14

FIG. 6A

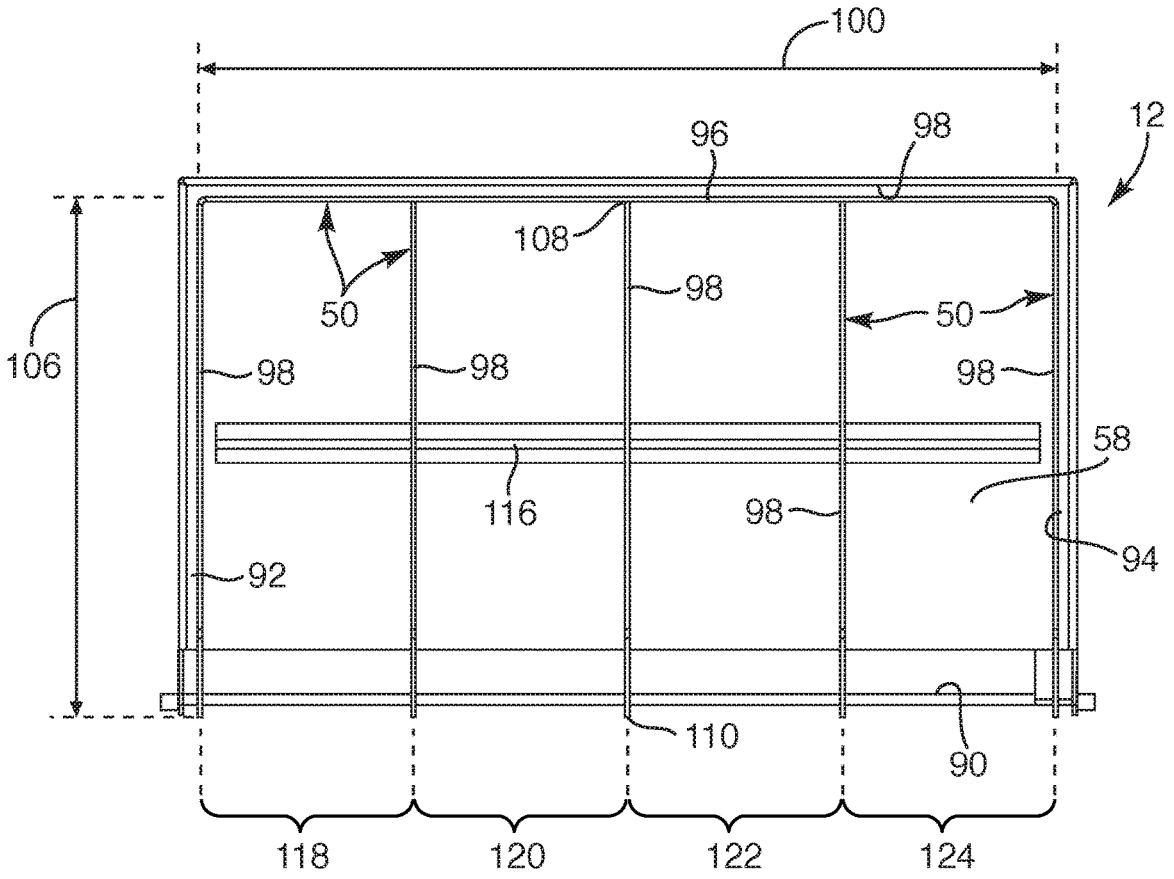
100
12
96
98
108
98
50
50
106
98
98
98
58
116
98
94
92
110
90
118
120
122
124

FIG. 7

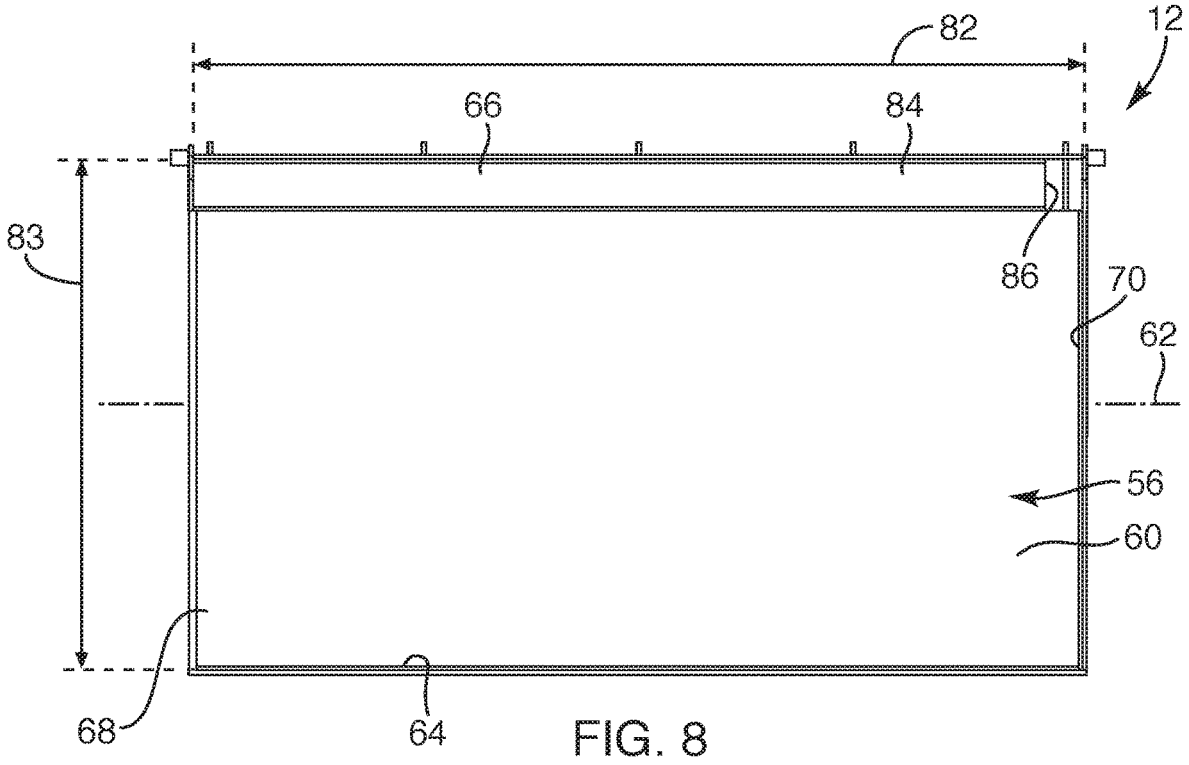
82
12
66
84
83
86
70
62
56
60
68
64

FIG. 8

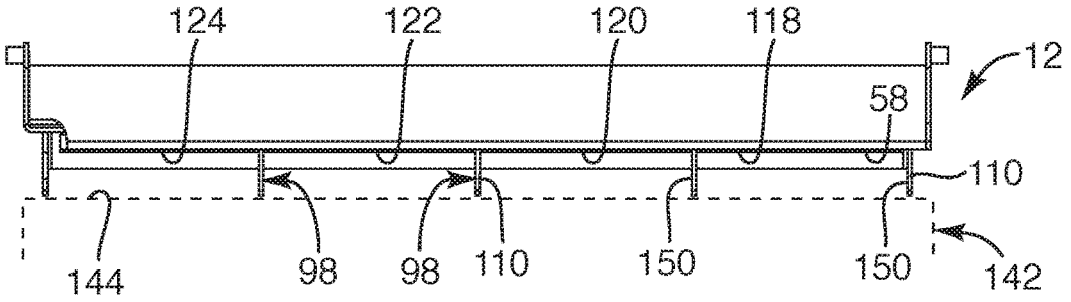

FIG. 9

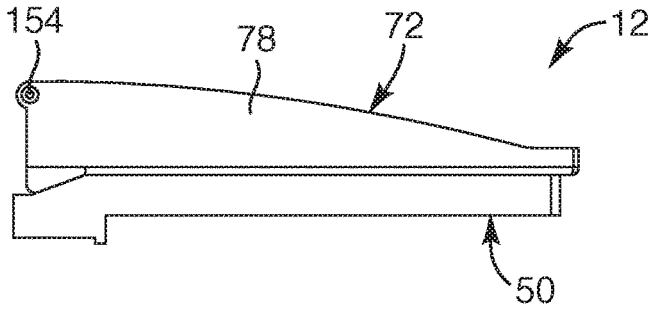

FIG. 10

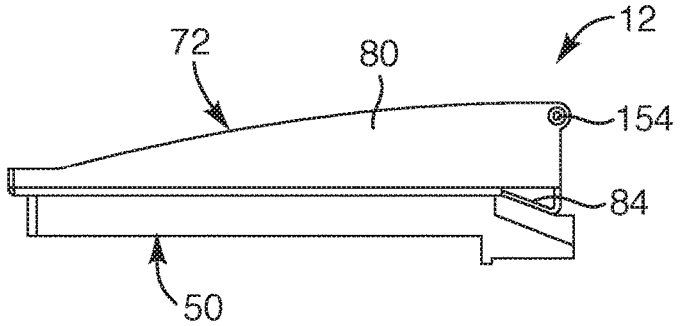

FIG. 11

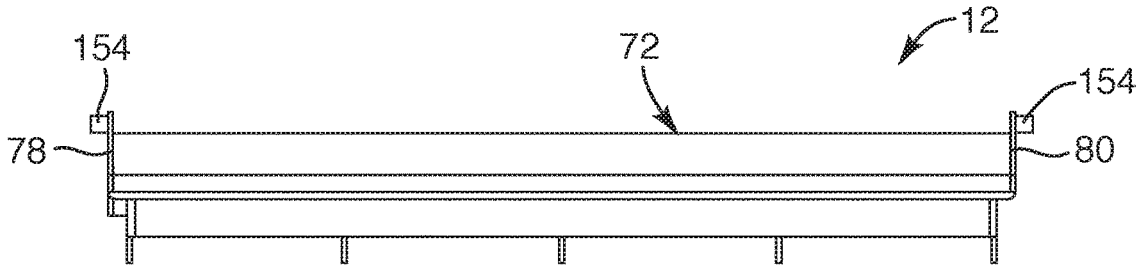

FIG. 12

SYSTEM, DEVICE AND METHOD FOR CONTROLLING CONVECTIVE HEATING OF A GRIDDLE

CROSS-REFERENCE TO RELATED APPLICATIONS

This application claims the benefit of U.S. Provisional Application No. 62/331,673, filed May 4, 2016, the disclosure of which is hereby incorporated by reference in its entirety.

TECHNICAL FIELD

The present invention relates generally to gas heated outdoor cooking stations and, more specifically, the present invention relates to a griddle cooking station with controlled region heating and controlled convection heat flow.

BACKGROUND

Barbequing has become a popular and pervasive tradition in much of the world. A barbeque grill is a device for cooking food by applying heat directly below a grill. There are several varieties of grills but most fall into one of two categories, either gas fueled or charcoal. Gas fueled grills typically use propane or natural gas as a fuel source, with the gas flame either cooking the food directly or heating grilling elements which in turn radiate the heat necessary to cook the food. Grilling has become a popular method of cooking food due to the unique flavors and texture imparted to the food during the grilling process.

A griddle is a cooking device consisting of a broad flat surface that can be heated using a variety of means and is used in both residential and commercial applications for a variety of cooking operations. The griddle is most commonly a flat metal plate composed of cast or wrought iron, aluminum or carbon steel. Griddles are commonly heated directly or indirectly by open flame or electrical elements. Using a griddle placed directly on a barbeque grill or over flame burners has also become popular when cooking foods not as well suited for cooking directly on a grill over an open flame.

One problem with using a griddle directly on a grill or over flame burners is the control of the temperature of the griddle cooking surface when it is desired to only use a portion of the surface or when it is desired to have certain portions of the cooking surface a higher temperature than other portions. Another problem with using a griddle over flame burners is the convective heat from the flames moves around the entire periphery of the griddle, often times making it difficult to cook effectively or even somewhat dangerous if children are present due to the heat bellowing around the front of the griddle.

BRIEF SUMMARY OF THE INVENTION

The present invention is directed to devices, systems, and methods for maintaining convection heat within a heating region of a griddle and channeling and the convection heat therefrom. For example, in one embodiment, a cooking system is provided. The cooking system includes a frame, multiple burners, and a griddle. The frame extends with a front side, a rear side, a left side, and a right side, which each may extend between a lower portion and an upper portion of the frame. The multiple burners are coupled to and extend between the front side and the rear side of the frame. The

griddle is sized to be suspended by the frame and to be positioned on the upper portion of the frame. The griddle includes a cooking surface and an underside surface, the underside surface extending to define a rectangular shape with a front end, a rear end, a left end, and a right end. Further, the griddle includes a front rib and multiple lateral ribs. The front rib extends along the front end of the underside surface, and the multiple lateral ribs extend along the underside surface from the front rib to the rear end of the underside surface. The multiple lateral ribs are spaced from each other so as to define multiple heating regions such that each heating region is defined between adjacently extending lateral ribs. Further, each of the heating regions include one of the multiple burners positioned below one of the multiple heating regions. With this arrangement, each of the lateral ribs extend downward from the underside surface a height so as to funnel convection heat from any one of the multiple burners toward the rear end of the underside surface of the griddle and from the rear side of the frame.

In one embodiment, the front rib substantially blocks convection heat from escaping from the front side of the frame. In another embodiment, the adjacently extending lateral ribs are sized to substantially prevent convection heat from moving over the adjacently extending lateral ribs and directly, convectively heating adjacent heating regions. In another embodiment, the adjacently extending lateral ribs are sized to substantially maintain convection heat between the adjacently extending lateral ribs to only convectively heat the corresponding heating region between the adjacently extending lateral ribs.

In another embodiment, the cooking surface of the griddle includes a trough configured to catch grease, the trough extending only along a rear end surface of the cooking surface. In another embodiment, the cooking surface of the griddle includes a trough configured to catch grease, the trough extending only along a rear end surface of the cooking surface and defining an opening at one end of the trough. In a further embodiment, the opening defined in the trough is configured to deposit grease within a vent box coupled to the frame, the vent box including venting for air intake to feed air to the multiple burners.

In another embodiment, the frame includes an air intake system configured to feed air to the multiple burners, the air intake system including at least one of a front vent along the front side of the frame, a left vent along the left side of the frame, and a right vent along a right side of the frame. In another embodiment, the front rib and the lateral ribs facilitate convection heat to be channeled to a rear side of the frame.

In accordance with another embodiment of the present invention, a griddle configured to control convection heat from one or more gas flame burners of a cooking station is provided. The griddle includes a cooking surface, an underside surface, a front rib, and multiple lateral ribs. The cooking surface includes a rectangular shape and is configured to face upward. The underside surface extends to generally correspond with the cooking surface, the underside surface facing in an opposite direction than the cooking surface, and the underside surface extending to define a periphery with a front end, a rear end, a left end, and a right end. The front rib includes a front rib height and is coupled to the front end of the underside surface such that the front rib extends longitudinally along the front end of the underside surface. The multiple lateral ribs each extend laterally relative to the front rib and extend along the underside surface from the front rib to the rear end of the underside surface. The multiple lateral ribs are spaced from each other

so as to define multiple heating regions such that each heating region is defined between adjacently extending lateral ribs. The heating regions are each configured to be positioned above a gas flame burner. With this arrangement, each of the lateral ribs extend downward from the underside surface a lateral rib height such that the adjacently extending lateral ribs are configured to funnel the convection heat from the gas flame burner toward the rear end of the underside surface and away from a rear side of the cooking station.

In one embodiment, the front rib substantially blocks the convection heat from escaping a front side of the underside surface. In another embodiment, the adjacently extending lateral ribs are sized to substantially prevent convection heat from moving over the adjacently extending lateral ribs and directly, convectively heating adjacent heating regions. In another embodiment, the adjacently extending lateral ribs are sized to substantially maintain convection heat therebetween to only convectively heat the corresponding heating region between the adjacently extending lateral ribs.

In another embodiment, the cooking surface includes a trough configured to collect grease, the trough extending only along a rear end surface of the cooking surface, the trough defining a through hole configured to funnel grease therethrough. In another embodiment, the griddle further includes a splash guard that extends upward above a periphery of the cooking surface. In a further embodiment, the splash guard includes a hinge structure, the hinge structure configured to pivotably couple to a cover of the cooking station.

In accordance with another embodiment of the present invention, a method for selectively heating regions of a griddle with convection heat from one or more gas flame burners of an outdoor cooking station is provided. The method includes: turning on one or more gas burners of the outdoor cooking station such that the one or more gas burners are positioned below an underside surface of a griddle; and selectively heating specific regions of the griddle that correspond with the one or more gas burners turned on, the specific regions each defined by adjacently extending parallel ribs, the ribs extending laterally from a front rib toward a rear end of the underside surface of the griddle such that the front rib and the parallel ribs channel convection heat to flow between the adjacently extending parallel ribs toward the rear end of the griddle and away from the outdoor cooking station.

In one embodiment, the step of selectively heating includes selectively heating the specific regions with the parallel ribs substantially preventing convection heat from moving over the parallel ribs by the convection heat being drawn toward the rear end of the griddle. In another embodiment, the step of selectively heating includes blocking the convection heat from moving toward a front end of the underside of the griddle with a downward facing edge of the front rib resting on a frame of the outdoor cooking station to substantially block the convection heat from escaping out the front side of the cooking station. In still another embodiment, the step of selectively heating includes substantially preventing convection heat from moving over the parallel ribs by drawing the convection heat toward the rear end of the griddle with rear end openings, each rear end opening defined by oppositely positioned rear rib ends of the parallel ribs and the rear end of the underside surface of the griddle and a frame component of the outdoor cooking station, the parallel ribs positioned on the frame component.

BRIEF DESCRIPTION OF THE SEVERAL VIEWS OF THE DRAWINGS

The foregoing and other advantages of the invention will become apparent upon reading the following detailed description and upon reference to the drawings in which:

FIG. **1** is a perspective view of a cooking station with a griddle thereon, according to an embodiment of the present invention;

FIG. **2** is a top view of the cooking station without the griddle and a cover shown, depicting gas flame burners within a frame of the cooking station, according to another embodiment of the present invention;

FIG. **3** is a perspective top view of the griddle, according to another embodiment of the present invention;

FIG. **4** is a perspective front-bottom view of the griddle, according to another embodiment of the present invention;

FIG. **5** is a perspective rear-bottom view of the griddle, according to another embodiment of the present invention;

FIG. **6** is a top view of the cooking station with the griddle, depicting heating regions and burners in dashed lines, according to another embodiment of the present invention;

FIG. **6**A is a cross-sectional side view of the cooking station taken along section line A-A in FIG. **6**, depicting one burner convectively heating a single region of the griddle and movement of convection heat toward a rear side of the cooking station, according to another embodiment of the present invention;

FIG. **7** is a bottom view of the griddle, depicting the lateral ribs and heating regions, according to another embodiment of the present invention;

FIG. **8** is a top view of the griddle, depicting a trough and the lateral ribs extending beyond and under the trough at the rear end of the underside surface of the griddle, according to another embodiment of the present invention;

FIG. **9** is a rear view of the griddle, depicting a rear frame portion in dashed lines, according to another embodiment of the present invention.

FIG. **10** is a left side view of the griddle, according to the present invention;

FIG. **11** is a right side view of the griddle, depicting a through hole at an end of the trough, according to another embodiment of the present invention; and

FIG. **12** is a front view of the griddle, according to another embodiment of the present invention.

DETAILED DESCRIPTION OF THE INVENTION

Referring to FIG. **1**, a cooking station **10** sized and configured to support a griddle **12**, is provided. The griddle **12** of the cooking station **10** may include structure for channeling and maintaining convection heat flow within selective heat regions of the griddle **12** (see FIGS. **6** and **6**A). As depicted, in one embodiment, the cooking station **10** may include a frame **14** (FIG. **2**) and components sized and configured to be employed as an insert for an outdoor kitchen that may be coupled to, for example, natural gas. In this embodiment, the griddle **12** may be configured to be removeably coupled to the frame **14** or removably integrated with the cooking station **10**. In another embodiment, the cooking station **10** described herein may be a cooking station that is portable with, for example, leg components, caster wheels, and a propane gas tank (not shown), in which the griddle **12** may be removeably coupled and/or removably integrated to the frame **14** such that the griddle **12** is

sized to integrate with the frame components. In another embodiment, the griddle **12** may be positioned to merely rest over a grill or frame in a free-supporting manner. In other words, the griddle **12** of the present invention may be employed with various types of cooking stations, i.e., insert or portable, so long as the cooking station is sized to support the griddle **12**.

With respect to FIGS. **1** and **2**, as set forth, the cooking station **10** may include the frame **14** that may extend with various frame components. Such frame components may extend along a front side **16**, a rear side **18**, a left side **20**, and a right side **22** of the frame **14** to form a housing and support structure for the various components of the cooking station **10**. The various components for heating the cooking station **10** may be typical cooking station components with gas flame burners **24**, as known to one of ordinary skill in the art. For example, the frame **14** may be coupled to and support multiple burners **24** each associated with igniter needles **26** or the like. The burners **24** may be operated and controlled from a front panel **28** coupled at the front side **16** of the frame **14**. The front panel **28** may include burner knobs **30** and an igniter button **32**, for example. The burner knobs **30** may be configured to control gas flow, via valves and tubing (not shown), through corresponding burners **24** by turning the burner knobs **30** to various open positions and a closed position. For example, turning the knob clockwise may increase the amount of gas provided through the burners **24** and turning the knob counter-clockwise may decrease gas flow until reaching a hard stop at the closed or off position. Each burner knob **30** may be associated with various valves and a manifold coupled to a fuel source (not shown), typically provided in open gas flame cooking stations, as known to one of ordinary skill in the art.

In one embodiment, the multiple burners **24** are coupled to the frame **14** and may extend between the front side **16** and the rear side **18** of the frame **14**. For example, the multiple burners **24** may include a first burner **34**, a second burner **36**, a third burner **38**, and a fourth burner **40**, each of which may be elongated and tubular or the like. Each of the burners **24** may be evenly spaced relative to each other so that each burner **24** may be centered below a different heating region or heat zone of the griddle **12** (see FIG. **6**), discussed in further detail hereafter.

In an embodiment relative to an insert type cooking station **10**, as depicted, the cooking station **10** may include an air intake system **42** and an air out-take system **44**, the air intake system **42** for ensuring air flow is fed to the burners **24** and the air out-take system **44** for venting convection heat from the rear side of the cooking station **10**. For example, in one embodiment, the air intake system **42** may include a left vented duct **46** and a right vented duct **48** and a front vented duct **50**. The left and right vented ducts **46**, **48** may be box shaped with vents along a top wall and a front wall thereof, the top and front walls being exposed relative to, for example, counter-tops of an outdoor kitchen. Additional venting (not shown) along the left and right sides **20**, **22** of the frame **14** (behind the left and right vented ducts **46**, **48**) may be provided for feeding air to the burners **24**. The front vented duct **50** may be positioned below the front panel **28** for air flow therethrough, as depicted by arrow **52**, as shown in FIG. **6**A.

With respect to FIGS. **2** and **6**A, the air out-take system **44**, may include ribbing structure **50** of the griddle **12**, discussed in further detail herein, and a rear vented duct **54** for channeling convection heat from below the griddle **12** and from the rear side of the cooking station **10**. Such rear vented duct **54** may be box shaped and include venting defined in the top wall thereof.

In another embodiment, the cooking station **10** may be portable, in which venting may be employed on the left, right and front sides of frame panels (not shown) of the frame or such venting may not be necessary because the underside of the frame may be open to communicate air flow to the burners **24**. In a portable cooking station embodiment, the air out-take system may be facilitated solely with the ribbing structure **50** of the griddle **12** and/or a rear portion of the griddle **12**, in which the rear vented duct may not be included with the portable cooking station.

Now with reference to FIGS. **3**, **4** and **8**, the griddle **12** will now be described. The griddle **12** may include an upper surface **56** and an underside surface **58**. In one embodiment, the upper surface **56** may include a flat cooking surface **60** extending over substantially all or a majority of the upper surface **56**. The upper surface **56** may be elongated with a rectangular shape defining a longitudinal axis **62**, the upper surface **56** extending to an upper front end **64**, an upper rear end **66**, an upper left end **68** and an upper right end **70**. In one embodiment, the periphery of the upper surface **56** or each side may include a splash guard **72**, such as a front splash guard **74**, a rear splash guard **76**, a left splash guard **78** and a right splash guard **80**. The front and rear splash guards **74**, **76** may be coupled to and extend along a length **82** of the upper front end **64** and the upper rear end **66**, respectively, of the upper surface **56** of the griddle **12**. Similarly, the left and right splash guards **78**, **80** may be coupled to and extend along a width **83** of the upper left end **68** and the upper right end **70**, respectively, of the upper surface **56** of the griddle **12**. Each of the splash guards **72** may extend upward from their respective sides. The rear splash guard **76** may extend higher than the front splash guard **74** and the left and right splash guards **78**, **80** may taper or slope downward in height from the rear to the front sides.

In one embodiment, the upper surface **56** may define a trough **84** extending along the upper rear end **66** of the upper surface **56**. The trough **84** may be sized and configured to collect grease or other food byproducts being cooked on the griddle **12**. The trough **84** may extend with a bend from the flat cooking surface **60** along the upper rear end **66**. In one embodiment, the trough **84** may extend entirely along the length **82** and along the upper rear end **66** of the upper surface **56**. Further, the trough **84** may extend only along the upper rear end **66** of the upper surface **56**, without any other troughs extending along other sides of the cooking surface **60**. In another embodiment, the trough **84** may include a through hole **86** along the length of the trough **84**. For example, the trough **84** may define the through hole **86** at one end of the trough **84**, such as adjacent a corner of the upper rear end **66** and upper right end **70** of the upper surface **56**. Although not shown, under the through hole **86**, a channel, such as a u-shaped channel, leading or extending to a grease cup may be positioned and removably secured below the through hole **86**. Such channel and grease cup may be positioned within the right vented duct **48** and accessible from the top wall of the right vented duct **48** that may be pivotably openable (see FIG. **1**). The grease cup may be readily removable for cleaning purposes and then re-positioned and secured. In another embodiment, the through hole **86** may be at or adjacent a mid-point along the length of the trough **84**.

Now with reference to FIGS. **4**, **5** and **7**, the underside surface **58** of the griddle **12** may also extend with a rectangular shape corresponding with the shape of the upper

surface **56**. Similar to the upper surface, the underside surface **58** may extend to a front end **88**, a rear end **90**, a left end **92** and a right end **94**. The underside surface **58** may include the ribbing structure **50** or multiple ribs each being positioned and directly coupled to the underside surface **58** of the griddle **12** in pre-determined locations to define heating regions and channels for venting or channeling convection heat from the burners **24** (FIG. **2**). For example, the multiple ribs **50** may include a front rib **96** and multiple lateral ribs **98**. The front rib **96** may be elongated with a front rib length **100** that extends with a consistent height **102** and thickness. The front rib **96** may extend along the front end **88** of the underside surface **58**. The front rib **96** may include a front lower edge **04** configured to be positioned to rest on a portion of the front side **16** of the frame **14** (see FIG. **2**).

Each of the lateral ribs **98** may extend laterally relative to the front rib **96** such that the lateral ribs **98** may be positioned substantially perpendicular relative to the front rib **96** such that the lateral ribs **98** extend substantially parallel relative to each other. The lateral ribs **98** may be elongated with a lateral rib length **106** that extends between first and second ends **108**, **110** with an upper edge **112** and a lower edge **114**. The first end **108** of each lateral rib **98** may be positioned and secured directly against an inside surface of the front rib **96**. The second end **110** may extend toward or adjacent to the rear end **90** of the underside surface **58**. The upper edge **112** may be positioned and secured against the underside surface **58** with the upper edge **112** extending downward at an angle adjacent the second end **110** to account for the underside of the trough **84**. The lower edge **114** of the lateral ribs **98**, adjacent the second end **110**, may be configured to rest on a portion of the rear side **18** of the frame **12** (FIG. **2**). The lower edge **114** may extend from the first end **108** continuously and then step downward to a rear portion of the lower edge **114** sized and configured to rest on the frame **12**. In another embodiment, the lower edge **114** of the lateral ribs **98** may angle downward from adjacent the first end **108** and then extend parallel and continuous with the underside surface **58** to the second end **110** of the lateral ribs **98**.

In one embodiment, the underside surface **58** may also include one or more stabilizers **116**. For example, the one or more stabilizers **116** may be elongated and extend between the left and right ends **92**, **94** along the underside surface **58** of the griddle **12**, for example, along a mid portion of the griddle **12**. The one or more stabilizers **116** may be configured to stabilize the griddle **12** so as to substantially prevent warping upon the griddle **12** being over heated. Further, in addition to the front rib **96** and lateral ribs **98** serving as channel portions for channeling convective heat, the front rib **96** and lateral ribs **98** may also serve as stabilizers in substantially preventing the griddle from warping or partially warping.

Now with reference to FIGS. **4**, **6** and **7**, the lateral ribs **98** may extend from the front rib **96** in an evenly spaced relationship relative to each other so as to define multiple heating regions of the griddle **12** on the cooking station **10**. In other words, each heating region of the underside surface **58** of the griddle **12** may be defined between adjacently extending lateral ribs **98**. Further, each heating region may be defined between the front rib **96** and the rear end **90** of the underside surface **58** between adjacently extending lateral ribs **98**. As depicted, the heating regions defined by the adjacently extending lateral ribs **98** each include one burner **24** positioned below each heating region, the front rib **96**, lateral ribs **98** and burners **24** depicted with dashed lines in FIG. **6**. In one embodiment, as depicted, the griddle **12** may define multiple heating regions, for example, a first region **118**, a second region **120**, a third region **122**, and a fourth region **124**, each region including a single burner **24** aligned and centered below a corresponding heating region. In another embodiment, there may be multiple burners **24** associated with a single heating region. In this manner, one or more burners **24** may be sized and configured to exclusively provide convective heat to a defined heating region.

With respect to FIG. **6**A, the griddle **12** may be positioned, at least partially, within the frame **14** of the cooking station **10**. In one embodiment, the front rib **96** and lateral ribs **98** of the griddle **12** may fit snug within the frame **14** of the cooking station **10** in an integrated manner, the cooking surface **60** and splash guards **72** of the griddle **12** disposed above the frame **14**. For example, the front lower edge **104** (see FIG. **4**) of the front rib **96** may be positioned on a ledge **126** of a front extension **128** extending along the front side **16** of the frame **14** with an outer surface **130** (see FIG. **4**) of the front rib **96** abutting against an inward facing front frame surface **132**. Further, the front end **88** (FIG. **4**) of the underside surface **58** of the griddle **12** may sit flat against an upward facing front frame surface **134** of the frame **14**. In this manner, the front rib **96** along with the front end **88** of the griddle **12** cooperates with the front side **16** of the frame **14** in an integrated manner to substantially block and prevent convection heat **140** escaping from the front side **16** of the frame **14** and griddle **12**.

With respect to FIGS. **2**, **5** and **6**A, as previously set forth, the lateral ribs **98** of the griddle **12** may at least partially fit within the frame **14** of the griddle **12**. For example, an outer surface **136** of the lateral ribs **98** at the most left and right sides of the griddle **12** may fit snug relative to an inner surface of the respective left and right sides **20**, **22** of the frame **14**. Further, the frame **14** may include a rear frame portion **142** with a horizontal component **144** and a vertical component **146**, each of which may extend between left and right sides **20**, **22** of the frame **14** along a rear side **18** of the frame **14**. The vertical component **146** may be employed to couple one end of each of the burners **24** thereto. The horizontal component **144** of the rear frame portion **142** may be sized and configured to support and receive the lower edge **114** adjacent the second end **110** of each of the lateral ribs **98**.

Referring to FIGS. **6**A and **9**, with the lower edge **114** adjacent the second end **110** of each of the lateral ribs **98** positioned directly on the horizontal component **144**, such arrangement provides multiple openings **150** or passageways above the horizontal component **144** that each correspond with adjacently extending lateral ribs **98**. In other words, each opening **150** or passageway is defined between the second ends **110** of the adjacently extending lateral ribs **98** and the rear end **90** of the underside surface **58** of the griddle **12** and the horizontal component **144** of the rear frame portion **142**. Such opening **150** or passageway provides a path of least resistance for convection heat **140** to flow such that the opening **150** is configured to draw convection heat **140** from the space between the adjacently extending lateral ribs **98**. In this manner, there are multiple openings **150** or passageways provided at the rear side of the griddle **12**, each of which are similarly defined between each of the second ends **110** of the adjacently extending lateral ribs **98** that corresponds with one of the first, second, third, and fourth heating regions **118**, **120**, **122**, and **124**. Further, in another embodiment, the openings **150** or passageways are not limited to a fully bound or closed loop opening **150**,

but may extend and be defined as an inverted u-shape or channel shape (without the horizontal component **144**), as depicted in FIG. **9**.

Now with reference to FIGS. **6** and **6**A, applying convection heat **140** to one of the heating regions with one of the burners **24**, will now be described. With the burner **24** positioned directly below, for example, the second heating region **120** and, upon the burner **24** being ignited, convection heat **140** rises to the underside surface **58** of the griddle **12** along the second heating region **120**. Due to the height of the ribbing structure **50** (FIG. **5**), a space or volume between the lateral ribs **98** fills with convection heat **140**, thereby convectively heating the second heating region **120**. As this space fills, the convection heat **140** is drawn toward the rear side of the griddle **12** as indicated by arrow **152**, the path of least resistance due to there not being a rib structure extending along the length **82** (FIG. **8**) of the rear end **90** of the griddle **12**, but rather, a passage or opening **150** (see also FIG. **9**) between the second ends **110** of the adjacently extending lateral ribs **98** that draws the convection heat **140** therethrough before bellowing over the lower edge **114** of the lateral ribs **98** to adjacent heating regions, such as the first and third heating regions **118**, **122**. In this manner, each of the lateral ribs **98** extend downward a distance or height from the underside surface **58** of the griddle **12** so that convection heat **140** may only heat the particular region or second heating region **120** associated with the burner **24** and is funneled toward the rear end **90** of the underside surface **58** of the griddle **12** through the opening **150**.

With respect to FIGS. **1**, **10**, **11** and **12**, the left splash guard **78** and the right splash guard **80** of the griddle **12** may include a hinge component **154**. Such hinge component **154** may be sized and configured to cooperate with a cover **15** or lid of the cooking station **10**. In this manner, the cover **15** may be pivotably coupled to the griddle **12**. In another embodiment, the cover **15** may be pivotably coupled to the frame **14**. Further, the frame **14** may include finger shields **156** extending upward on a left side **20** and right side **22** of the frame **14**. Such finger shields **156** may extend upward and adjacent to the hinge component **154** of the splash guards **72** to minimize potential pinching of a user's fingers proximate the pivoting point between the cover **15** and the splash guards **72**.

The frame **14** of the cooking station **10** and griddle **12** may be formed of metallic materials. For example, various components of the frame **14** may be formed of various steel materials, such as stainless steel or the like, formed with paneling, extensions, cross-members, or any other suitable frame components, and may be coupled together with typical fasteners and/or bolts and the like. The griddle **12** may also be formed from metallic materials, such as, carbon steel, cast iron, stainless steel, or aluminum, or various metal alloys, or any other suitable cooking surface material known in the art, such as porcelain coated materials. The metallic materials may be manufactured using cold rolled steel processes, or hot rolled steel techniques, or any other known manufacturing process, such as casting or stamping, as known in the art. The various plate components of the griddle **12** may include a thickness of 5-6 millimeters, but is not so limited, as such thickness of the various components of the griddle may range, for example, between 4-10 millimeters. Further, the ribbing structure **50** may be formed with typical metal cutting techniques and processes and coupled to the underside surface of the griddle **12** with known techniques, such as welding. Also, portions of the griddle **12**, such as the trough **84** and splash guards **72** may be formed by employing cutting and bending techniques from sheet or plate material to form the griddle **12** as well as forming portions to the of the griddle **12** with welding techniques, or employing any other known process or techniques to form the griddle **12**, as known by one of ordinary skill in the art.

While the invention may be susceptible to various modifications and alternative forms, specific embodiments have been shown by way of example in the drawings and have been described in detail herein. Further, the structural features of any one embodiment disclosed herein may be combined or replaced by any one of the structural features of another embodiment set forth herein. However, it should be understood that the invention is not intended to be limited to the particular forms disclosed. Rather, the invention includes all modifications, equivalents, and alternatives falling within the spirit and scope of the invention as defined by the following appended claims.

What is claimed is:

1. A cooking system, comprising:

a frame extending with a front side, a rear side, a left side, and a right side each extending between a lower portion and an upper portion;

multiple burners coupled to and extending between the front side and the rear side of the frame; and

a griddle sized to be suspended by the frame to be positioned on the upper portion of the frame, the griddle having a cooking surface and an underside surface, the underside surface extending to define a rectangular shape with a front end, a rear end, a left end, and a right end, the griddle including a front rib and multiple lateral ribs, the front rib extending along the front end of the underside surface, and the multiple lateral ribs extending along the underside surface from the front rib to the rear end of the underside surface, the multiple lateral ribs being spaced from each other so as to define multiple heating regions such that each heating region is defined between adjacently extending lateral ribs, each of the heating regions includes one of the multiple burners positioned below one of the multiple heating regions, each of the lateral ribs extend downward from the underside surface a height so as to funnel convection heat from any one of the multiple burners toward the rear end of the underside surface of the griddle and from the rear side of the frame;

wherein the front rib and the multiple lateral ribs are integrally formed with the underside surface of the griddle; and

wherein the multiple lateral ribs directly extend from the underside surface of the griddle such that each lateral rib is spaced and separate from an adjacent lateral rib.

2. The cooking system of claim **1**, wherein the front rib substantially blocks convection heat from escaping from the front side of the frame.

3. The cooking system of claim **1**, wherein the adjacently extending lateral ribs are sized to substantially prevent convection heat from moving over the adjacently extending lateral ribs and directly, convectively heating adjacent heating regions.

4. The cooking system of claim **1**, wherein the adjacently extending lateral ribs are sized to substantially maintain convection heat between the adjacently extending lateral ribs to only convectively heat the corresponding heating region between the adjacently extending lateral ribs.

5. The cooking system of claim **1**, wherein the cooking surface of the griddle comprises a trough configured to catch grease, the trough extending only along a rear end surface of the cooking surface.

6. The cooking system of claim 1, wherein the frame comprises an air intake system configured to feed air to the multiple burners, the air intake system including at least one of a front vent along the front side of the frame, a left vent along the left side of the frame, and a right vent along a right side of the frame.

7. The cooking system of claim 1, wherein the front rib and the lateral ribs facilitate channeling convection heat to a rear side of the frame.

8. The cooking system of claim 1, wherein the cooking surface of the griddle comprises a trough configured to catch grease, the trough extending only along a rear end surface of the cooking surface and defining an opening at one end of the trough.

9. The cooking system of claim 8, wherein the opening defined in the trough is configured to deposit grease within a vent box coupled to the frame, the vent box including venting for air intake to feed air to the multiple burners.

10. A griddle configured to control convection heat from one or more gas flame burners of a cooking station, the griddle comprising:

a cooking surface having a rectangular shape, the cooking surface configured to face upward;

an underside surface, the underside surface extending to generally correspond with the cooking surface, the underside surface facing in an opposite direction than the cooking surface, the underside surface extending to define a periphery with a front end, a rear end, a left end, and a right end;

a front rib having a front rib height and coupled to the front end of the underside surface, the front rib extending longitudinally along the front end of the underside surface; and

multiple lateral ribs each extending laterally relative to the front rib and extending along the underside surface from the front rib to the rear end of the underside surface, the multiple lateral ribs being spaced from each other so as to define multiple heating regions such that each heating region is defined between adjacently extending lateral ribs, the heating regions each configured to be positioned above a gas flame burner, each of the lateral ribs extend downward from the underside surface a lateral rib height such that the adjacently extending lateral ribs are configured to funnel the convection heat from the gas flame burner toward the rear end of the underside surface and away from a rear side of the cooking station;

wherein the front rib and the multiple lateral ribs are integrally formed with the underside surface; and

wherein the multiple lateral ribs directly extend from the underside surface such that each lateral rib is spaced and separate from an adjacent lateral rib.

11. The griddle of claim 10, wherein the front rib substantially blocks the convection heat from escaping a front side of the underside surface.

12. The griddle of claim 10, wherein the adjacently extending lateral ribs are sized to substantially prevent convection heat from moving over the adjacently extending lateral ribs and directly, convectively heating adjacent heating regions.

13. The griddle of claim 10, wherein the adjacently extending lateral ribs are sized to substantially maintain convection heat therebetween to only convectively heat the corresponding heating region between the adjacently extending lateral ribs.

14. The griddle of claim 10, wherein the cooking surface comprises a trough configured to collect grease, the trough extending only along a rear end surface of the cooking surface, the trough defining a through hole configured to funnel grease therethrough.

15. The griddle of claim 10, further comprising a splash guard extending upward above a periphery of the cooking surface.

16. The griddle of claim 15, wherein the splash guard includes a hinge structure, the hinge structure configured to pivotably couple to a cover of the cooking station.

17. A method for selectively heating regions of a griddle with convection heat from one or more gas flame burners of an outdoor cooking station, the method comprising:

turning on one or more gas burners of the outdoor cooking station such that the one or more gas burners are positioned below an underside surface of a griddle; and

selectively heating specific regions of the griddle that correspond with the one or more gas burners turned on, the specific regions each defined by adjacently extending parallel ribs, the ribs extending laterally from a front rib toward a rear end of the underside surface of the griddle such that the front rib and the parallel ribs channel convection heat to flow between the adjacently extending parallel ribs toward the rear end of the griddle and away from the outdoor cooking station, the front rib and the parallel ribs integrally formed with the underside surface of the griddle, and the parallel ribs directly extend from the underside surface of the griddle such that each parallel rib is spaced and separate from an adjacently extending parallel rib.

18. The method according to claim 17, wherein the selectively heating comprises selectively heating the specific regions with the parallel ribs substantially preventing convection heat from moving over the parallel ribs by the convection heat being drawn toward the rear end of the griddle.

19. The method according to claim 17, wherein the selectively heating comprises blocking the convection heat from moving toward a front end of the underside of the griddle with a downward facing edge of the front rib resting on a frame of the outdoor cooking station to substantially block the convection heat from escaping out the front side of the cooking station.

20. The method according to claim 17, wherein the selectively heating comprises substantially preventing convection heat from moving over the parallel ribs by drawing the convection heat toward the rear end of the griddle with rear end openings, each rear end opening defined by oppositely positioned rear rib ends of the parallel ribs and the rear end of the underside surface of the griddle and a frame component of the outdoor cooking station, the parallel ribs positioned on the frame component.

* * * * *