dacor®
The Life of the Kitchen.®

Discovery™ Outdoor Grill

Use and Care Manual

Models: OB36, OBS36, OB52, OBS52

Style varies. Model OB52 shown.

Table of Contents

Important Safety Instructions 1
Getting to Know Your Outdoor Grill 4
Setting Up Your Outdoor Grill 6
Operating Your Outdoor Grill 8
Care and Cleaning 17
Parts and Accessories.....22
Before You Call for Service.....22
Warranty and Service.....23
Warranty Card .....Back Cover

Loco Cookers, EX1020
IPR2024-00642
Loco Crazy Good Cookers, Inc. v. North Atlantic Imports, LLC

since 1965 AMERICAN MADE • FAMILY OWNED • dacor

dacor®
The Life of the Kitchen.®

To Our Valued Customer:

Congratulations on your purchase of the very latest in Dacor® products! Our unique combination of features, style and performance make us The Life of the Kitchen™, and a great addition to your home.

In order to familiarize yourself with the controls, functions and full potential of your new Distinctive Appliance, read this use and care manual thoroughly, beginning with the ***Important Safety Instructions*** section.

All Dacor appliances are designed and manufactured with quality and pride, while working within the framework of our company value. Should you ever experience a problem with your product, please first check the ***Before You Call for Service*** section of this manual for guidance. It provides useful suggestions and remedies prior to calling for service.

Valuable customer input helps us to continuously improve our products and services, so please feel free to contact our Customer Service Team for assistance with any of your product support needs.

Dacor Customer Service Team
14425 Clark Avenue
City of Industry, CA 91745

Telephone: (800) 793-0093
Fax: (626) 403-3130
Hours of Operation: Monday through Friday
6:00 A.M. to 5:00 P.M. Pacific Time
Web Site: www.dacor.com

Thank you for choosing Dacor for your home. We are a company built by families for families and we are dedicated to serving yours. We are confident that your new Dacor product will deliver a high level of performance and enjoyment for many years to come.

Sincerely,

The Dacor Customer Service Team

Tested in accordance with the latest edition of ANSI Z21.58 2006 ● CSA 1.6-2006 Standard for Outdoor Cooking Gas Appliances. In Canada: Installations must be in accordance with the current CAN/CG A-B149.1. Natural Gas Installation Code CAN/CG A-B149.2. Propane Installation Code and/or local code.

© 2007 Dacor. all rights reserved.

Important Safety Instructions

INSTALLER: LEAVE THESE INSTRUCTIONS WITH THE APPLIANCE.

CUSTOMER: READ THIS USE AND CARE MANUAL COMPLETELY BEFORE USING THIS APPLIANCE. SAVE IT FOR FUTURE REFERENCE. IT CONTAINS IMPORTANT USE AND CARE INFORMATION.

For service and warranty information see page 23.

If you have any questions (other than warranty questions), call:

Dacor Customer Service
Phone: (800) 793-0093 (U.S.A. and Canada)
Monday — Friday 6:00 A.M. to 5:00 P.M. Pacific Time

Web site: www.dacor.com

Have the complete model and serial number for your appliance available when you call. The numbers are found on the product data label, located on the back of the unit. Write these numbers below for future reference.

Model number _____

Serial number _____

Date of purchase _____

Since Dacor continuously improves the quality and performance of our products, we may need to make changes to the appliance without updating this manual. Visit www.dacor.com to download the latest version of this manual.

Important Information About Safety Instructions

The ***Important Safety Instructions*** and warnings in this manual cannot cover all possible problems and conditions that can occur. Use common sense and caution when installing, maintaining or operating this appliance.

Always contact the Dacor Customer Service Team about problems or conditions that you don't understand.

Safety Symbols and Labels

⚠ DANGER

Immediate hazards that **WILL** result in severe personal injury or death.

⚠ WARNING

Hazards or unsafe actions that **COULD** result in severe personal injury or death.

⚠ CAUTION

Hazards or unsafe actions that **COULD** result in minor personal injury or property damage.

⚠ DANGER

If you smell gas:

1. Shut off gas to the appliance.
2. Extinguish any open flame.
3. Open the canopy.
4. If the odor continues, keep away from the appliance and immediately call your gas supplier or your fire department.

⚠ WARNING

WARNING - NEVER use this appliance as a space heater to heat or warm a room. Doing so may result in carbon monoxide poisoning and overheating of the appliance.

⚠ WARNING

NEVER cover any slots, holes or passages anywhere on the appliance. Doing so blocks air flow and may cause carbon monoxide poisoning. Aluminum foil linings may also trap heat, causing a fire hazard.

⚠ WARNING

Do not store or use gasoline or other flammable liquids or vapors in the vicinity of this or any other appliance.

⚠ WARNING

This outdoor cooking gas appliance is not intended to be installed in or on a recreational vehicle and/or boats.

CALIFORNIA PROPOSITION 65 WARNING

The burning of gas cooking fuel generates some by-products that are on the list of substances which are known by the State of California to cause cancer or reproductive harm. California law requires businesses to warn customers of potential exposure to such substances. To minimize exposure to these substances, always operate this unit according to the use and care manual, ensuring you provide good ventilation when cooking with gas.

READ AND SAVE THESE INSTRUCTIONS

Important Safety Instructions

General Safety Precautions

To reduce the risk of fire, electric shock, serious injury or death, follow basic safety precautions, including the following:

⚠ WARNING

- If the information in this manual is not followed exactly, a fire or explosion may result causing property damage, personal injury or death.
- If you receive a damaged product, immediately contact your dealer or builder. Do not install or operate an appliance that has been damaged or dropped. Do not operate the rotisserie motor if it is damaged or malfunctioning.
- Make sure that this appliance has been properly installed by a qualified installer according to the accompanying installation instructions. Have the installer show you the location of the gas shut-off valve and the electrical outlet so that you know where and how to turn off the gas supply and disconnect power to the appliance.
- Use only the type of gas specified on the product data label on the back of the unit.
- To prevent hazardous combustion by-products from being drawn inside the house or building, keep the appliance clear of fresh air inlets.
- Do not repair or replace any part of this appliance unless specifically recommended in the literature accompanying it. All other service should be done by a qualified technician. Contact the Dacor Customer Service Team for examination, repair or adjustment.
- Before performing any type of cleaning or service, or moving the appliance, make sure that the gas supply is turned off and the power plug is disconnected from the electrical outlet.
- Do not install or use this appliance under unprotected overhead combustible materials.
- In the event of a power failure, use only the Dacor supplied match light tool or a long stemmed match.
- A MINIMUM clearance of 10 inches (25.4 cm) must be maintained, above the countertop material, from all combustible vertical materials on the sides and behind the outdoor grill chassis and canopy.
- A MINIMUM clearance of 1 1/4 inches (3.2 cm) must be maintained, above the countertop material, from all non-combustible vertical materials on the sides and behind the outdoor grill chassis and canopy.
- A MINIMUM clearance of 3/4 inch (1.9 cm) must be maintained, from the bottom of the control panel to any material for ventilation purposes. Failure to do so will block air flow through the outdoor grill and may cause carbon monoxide poisoning or improper operation.

⚠ WARNING

- A MINIMUM clearance of 1/4 inch (6 mm) must be maintained, inside the base enclosure below the countertop material, from all vertical surfaces on the sides of the appliance.
- Keep items that could explode, such as aerosol cans away from the outdoor grill and burners. Do not store flammable or explosive materials in adjacent cabinets or areas.
- Use only the factory supplied gas regulator or a Dacor approved replacement.
- On models OB52 and OBS52 equipped for use with a LP tank, use only a two stage regulator on the gas supply line.
- **IMPORTANT**: The outdoor grill and rotisserie motor are both equipped with a three prong grounding electrical plug to minimize the possibility of an electric shock hazard from this appliance. They must be plugged into a grounded, electrical outlet that meets local code for use with outdoor appliances. It is the responsibility of the customer to make sure the correct type of outlet, meeting local code, is installed. Do not under any circumstances:
  - ◇ Cut or remove the third (ground) prong from the power cord.
  - ◇ Use an adapter plug.
  - ◇ Use a power cord that is frayed or damaged.
- If using an extension cord, use only a grounded cord approved for use outdoors. Use a cord that is as short as possible. Avoid routing it through wet areas.

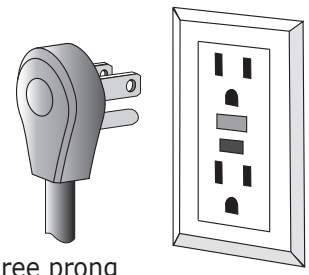

Three prong grounding plug

Grounded electrical outlet for outdoor use

Important Safety Instructions

⚠ WARNING

- Use this gas cooking appliance only outdoors. Do not use it inside a building, garage or any other enclosed area.
- Use this outdoor grill and the rotisserie motor only for their intended use as described in this manual. Use them only to cook food. They are not designed for commercial, industrial or laboratory use.
- DO NOT TOUCH ANY OF THE COOKING SURFACES DURING OR IMMEDIATELY AFTER USE. After use, make sure these surfaces have had sufficient time to cool before touching them.
- To avoid the possibility of fire or burns, do not allow clothing, potholders, towels or rags to come into contact with hot surfaces during and immediately after use. Do not wear loose or hanging apparel while using the appliance. Do not use towels or bulky cloth as pot holders.
- Do not hang flammable or heat sensitive objects over the appliance.
- To avoid the possibility of fire, do not leave the appliance unattended when in use.
- Exercise caution when opening the canopy. Let hot air or steam escape before looking or reaching into the appliance.
- Use only dry pot holders when removing food and cookware from the appliance. Wet pot holders can cause steam burns.
- Use extreme caution when adding water to food when cooking. Steam can cause serious burns or scalds.
- Clean and maintain the appliance regularly as instructed in the ***Care and Cleaning*** section of this manual. Keep the entire appliance free of grease that could catch fire. Clean the appliance thoroughly before operating it for the first time.
- Turn the knobs to the **OFF** position prior to removing them from the valve stems.
- Make sure this appliance is used only by those individuals who are able to operate it properly.
- Never allow anyone, including children to sit, stand or climb on any part of the appliance. Doing so may cause tipping, damage, serious injury or death.
- Do not leave children alone or unattended in the area around the appliance. Do not allow children to operate it, play with the controls, pull on the handle or touch other parts.
- Do not store items of interest to children on top of or above the appliance. Children could be burned or injured while climbing on it.
- Do not use the outdoor grill for storage.

⚠ WARNING

- Make sure that all of the burner parts are dry before lighting a side burner.
- Do not allow food to sit for more than one hour before or after cooking. Eating spoiled food can result in food poisoning.
- Keep flammable items, such as paper, cardboard, plastic and cloth away from the burners and other hot surfaces. Do not allow pot holders to touch hot surfaces or gas burners.
- When deep fat frying:
  - ◇ Be certain that the pan is large enough to contain the desired volume of food without overflow caused by the bubbling of the fat. Never leave a deep fat fryer unattended.
  - ◇ Avoid frying moist or frost-covered foods. Foods with high water content may cause spattering or spilling of the hot fat.
  - ◇ Heat fat slowly, and stir together any combination of oils and fats prior to applying heat. Utilize a deep fat frying thermometer to avoid heating the fat to temperatures above the flash point.

TO REDUCE THE RISK OF INJURY TO PERSONS IN THE EVENT OF A RANGE TOP GREASE FIRE:

- SMOTHER FLAMES with a close-fitting lid, cookie sheet or metal tray, then turn off the burner. BE CAREFUL TO PREVENT BURNS. If the flames do not go out immediately, EVACUATE AND CALL THE FIRE DEPARTMENT.
- NEVER PICK UP A FLAMING PAN - you may be burned.
- DO NOT USE WATER, including wet dish cloths or towels - a violent steam explosion may result.
  a. Use a fire extinguisher ONLY if:
  b. You have a Class ABC extinguisher, and you already know how to operate it.
  c. The fire is small and contained in the area where it started.
  d. The fire department is being called.
  e. You can fight the fire with your back to an exit.
- Non-stick coatings, when heated, can be harmful to birds. Remove birds to a separate, well-ventilated area during cooking.

⚠ CAUTION

- Do not allow acids (citrus juices, tomato sauces, etc.) to remain on the appliance's surfaces. The porcelain finish may stain.
- Never use the cooking surface as a cutting board.

Getting to Know Your Outdoor Grill

Outdoor Grill Features

A Illumina™ Burner Control Knobs: Use the knobs to light and adjust the heat level for the various burners. The matching knob illuminates when a burner is on. The trim rings B, located behind each knob, prevent liquids from getting into the outdoor grill's internal parts.

C Canopy: Covers the cooking surface. It holds heat in for more efficient cooking.

D Drip Tray: The drip tray catches grease that drips off of the food during cooking. It must always be in place when the outdoor grill is in use. Check and/or clean it before each use.

E Grates (grill compartment): The grates support the food and cooking utensils during cooking. Remove them for cleaning and to clean the area below them. The grates are porcelain coated. They are also available with an optional stainless steel finish.

F Flame Spreaders: The metal flame spreaders are located below the grates inside the grill compartment. They spread the heat from the burners evenly. Like the grates, they can be removed for cleaning.

G Light Switch: Turns on the grill compartment lights.

H Lights: There are two temperature resistant halogen lights to illuminate the grill compartment.

I Standard Burners: The standard burners are "U" shaped to provide even heating. The outdoor grill generates a spark to light the burners when you turn the corresponding burner control knob to the **LIGHT/HIGH** position.

J Sear Burner (Models OBS36 and OBS52 only): Located on the right side of the grill compartment. The infrared (IR) sear burner provides a more intense heat than the standard burners. Use it for searing in the natural juices when cooking meat. On models OB36 and OB52 a third standard burner takes its place.

K Side Burners (Models OB52 and OBS52 only): Models OB52 and OBS52 are equipped with a set of two "range type" burners on the left side. The side burners allow you to cook foods best cooked in pots and pans to free up space in the grill compartment.

L Side Burner Grate (Models OB52 and OBS52 only): The porcelain coated cast iron grate covers the side burners and supports pots and pans.

M Rotisserie Burner: The infrared (IR) rotisserie burner provides an intense heat for cooking meat placed on the rotisserie rod and forks.

N Rotisserie Motor: Turns the food on the rotisserie rod and forks during rotisserie cooking. It is removable.

O Rotisserie Motor Bracket: Holds the rotisserie motor in place during rotisserie cooking.

P Rotisserie Rod with Forks: Put meat on the rotisserie rod to cook with the rotisserie. The adjustable forks allow you to anchor the meat to the rod so that it does not slip when the rod turns.

Q Smoker Box: The included smoker box allows you to add a smoked flavor to grilled foods using specially treated wood chips. It is inserted into the grill compartment in place of one of the grates and can be shifted around to various locations.

R Temperature Gauge: Monitors the temperature inside the grill compartment.

T Warming Rack: Use the removable warming rack to warm things like buns or rolls, or to keep cooked food warm. **NOTE:** The warming rack is not for cooking cold food. Always remove it when using the rotisserie burner.

Outdoor Grill Features			
Model	Standard Burners	Sear Burner	Side Burners
OB36	3	None	None
OBS36	2	1	None
OB52	3	None	2
OBS52	2	1	2

Optional Grill Cart Features

Available for models OB36 and OBS36 only.

Shelves: The grill cart comes with two fold-down shelves (not shown). They attach to the sides of the outdoor grill chassis.

U Utility Drawers: Good for storing utensils and supplies. Do not store aerosol cans or flammables in the drawer.

V LP Tank Shelf: Used for holding the LP tank for outdoor grills equipped for LP tank use.

Getting to Know Your Outdoor Grill

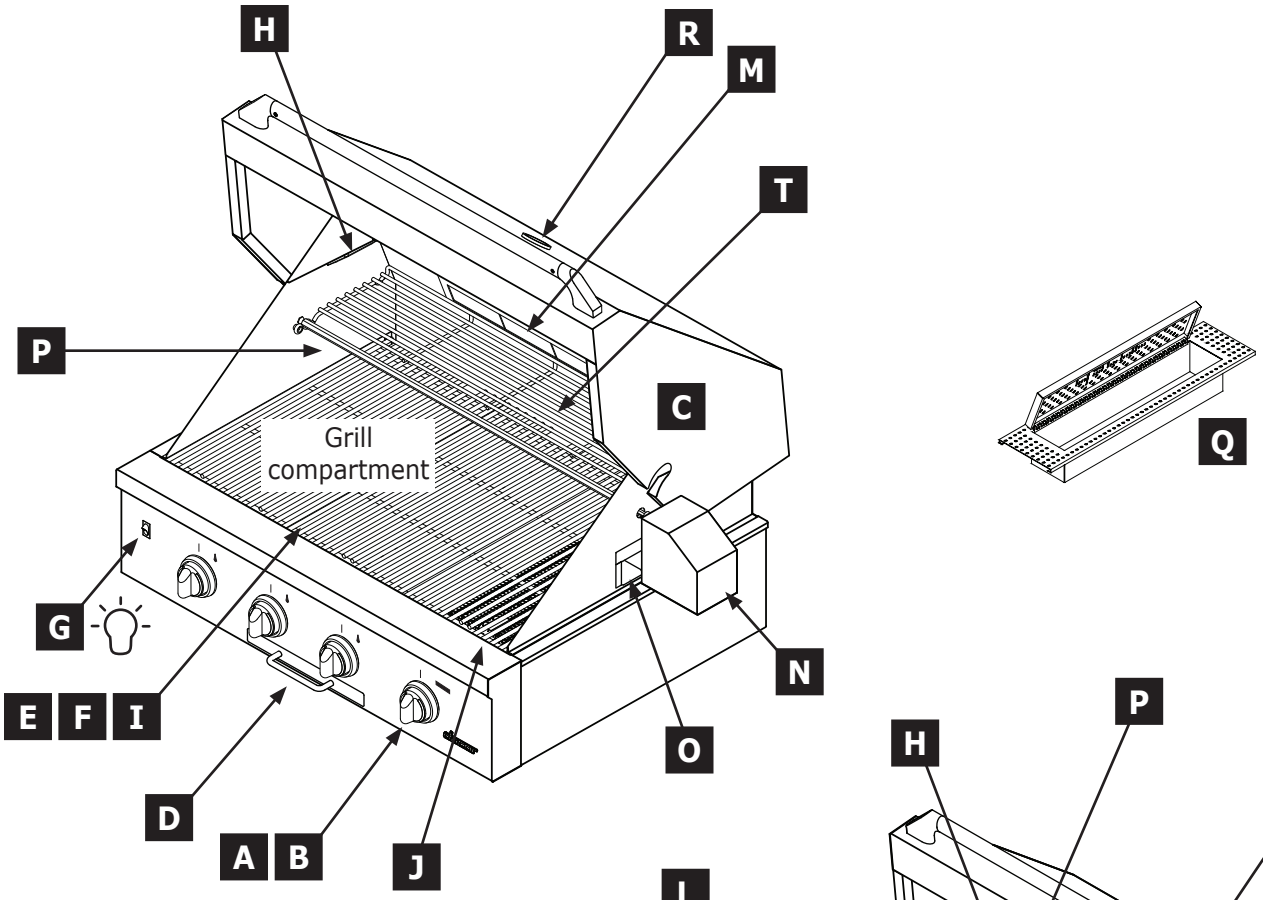

Models OB36 and OBS36

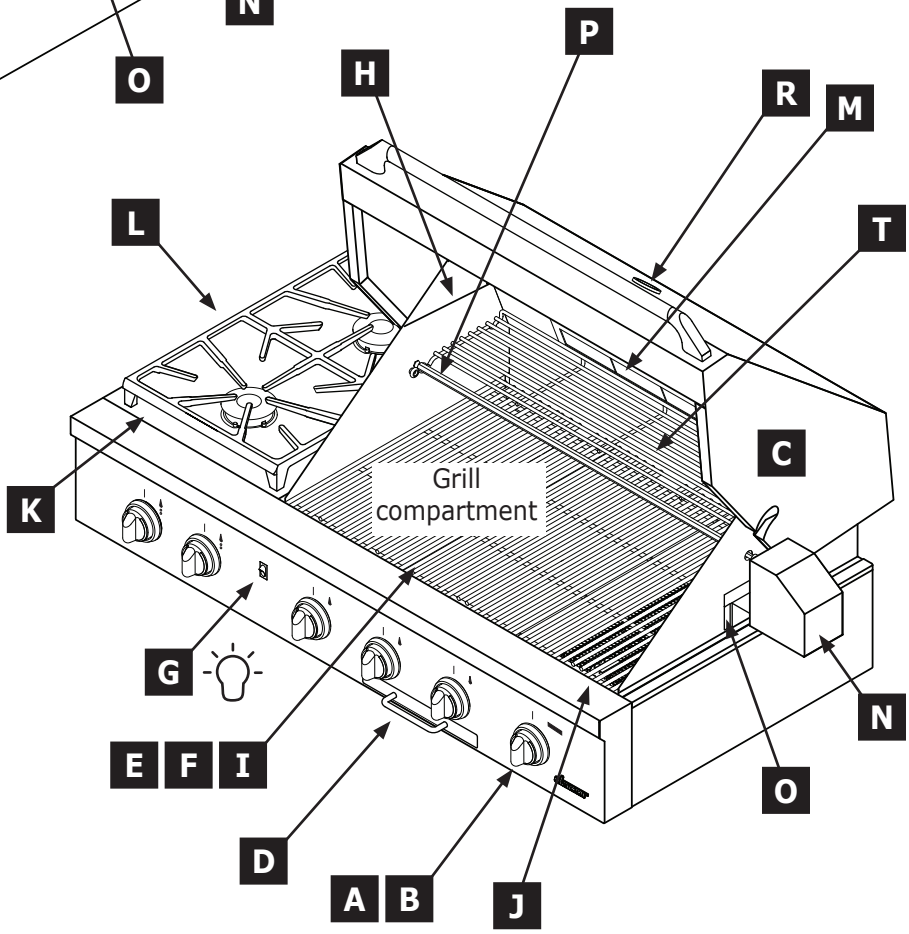

Models OB52 and OBS52

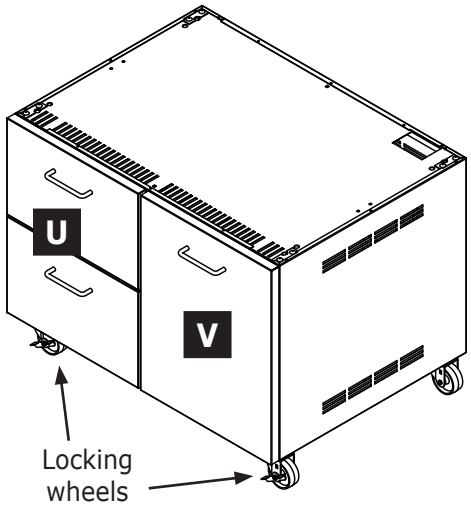

Model OBC36 Grill Cart (for OB36 and OBS36)

Setting Up Your Outdoor Grill

Assembling the Cooktop

Grill Compartment Assembly

⚠ WARNING

- Failure to remove the plastic coating and packing materials from the appliance before use will result in a fire hazard.
- To avoid a suffocation hazard, keep all plastic and packing materials out of reach of children.
- To avoid the risk of fire, explosion or carbon monoxide poisoning, do not attempt to use your outdoor grill without the flame spreaders, grates and burners completely and properly assembled.
- For proper operation the outdoor grill must be level during use.

1. Before using the outdoor grill for the first time, remove the plastic coating from all of the outside surfaces of the outdoor grill. Remove any excess glue from the surfaces using Dacor Stainless Steel cleaner (included with your outdoor grill).
2. Open the canopy.
3. Put the flame spreaders over the top of the burners inside the grill compartment. Rest them on the lower shelves toward the front and rear. The lighting holes go toward the bottom. If the outdoor grill is equipped with a sear burner, put one of the larger flame spreaders over it.
4. Put the grates over the top of the flame spreaders, resting the ends on the upper shelves toward the front and back of the compartment.
5. Make sure the grates and flame spreaders lie flat and that there is nothing beneath them.
6. Mount the warming rack on the pins near the top of the compartment.
7. Insert the drip tray into the slot below the burners. Push it all the way in until it stops.

Side Burners (Models OB52 and OBS52)

1. Place the burner heads over the burner bases. Line up the notches on the side of each burner head with the pins on each burner base.
2. Put the burner caps over the top of the burner heads. The notches on the bottom line up with the pins on the burner base. Gently twist each cap back and forth to make sure it seats completely.
3. Gently set the grate on top of the side burner cooktop. Line up the legs with the corresponding dimples. The side burner cover goes over the top of the grate and helps keep the side burner clean when not in use.

Electrical Requirements

⚠ WARNING

- Connect the power cords for this outdoor cooking gas appliance only to an electrically grounded outlet that meets local codes for outdoor appliances. In the absence of local codes, the electrical outlet must meet National Electric Code, ANSI/NFPA 70 or Canadian Electrical Code Standards for outdoor appliances.
- Keep any electrical supply cords and the fuel supply hose away from any heated surfaces and sharp edges. Keep the power cords dry and up off of the ground.

- The outdoor grill and the rotisserie motor are equipped with three prong grounding plugs to minimize the possibility of an electric shock hazard from this appliance. Plug them only into a three prong electrical outlet equipped for use with outdoor appliances that is protected by a minimum 15 Amp. circuit breaker or fuse.
- Dacor highly recommends installing a dedicated electrical outlet for your outdoor grill according to the requirements above.

Electrical Connection

Electrical Connection for Built-in Installations:

- Connect the power cord from the outdoor grill to an electrical outlet that meets the above requirements. An outlet equipped with a ground fault interrupter (GFI) is highly recommended whether or not it is required by local code. GFI electrical outlets are designed to minimize the risk of injury due to an electric shock.

Electrical Connection for Dacor Cart Installations:

The Dacor OBC36 grill cart is designed for a custom fit with OB36 and OBS36 series grills. The grill cart is equipped with a GFI type electrical outlet.

1. Connect the outdoor grill power cord to the electrical outlet located on the back wall at the back of the LP tank compartment.
2. Pull open the cover on the cart power input plug and connect an extension cord (15 Amp. minimum).
3. Connect the other end of the extension cord to a grounded three prong electrical outlet equipped for use with outdoor appliances that meets the requirements above.

Setting Up Your Outdoor Grill

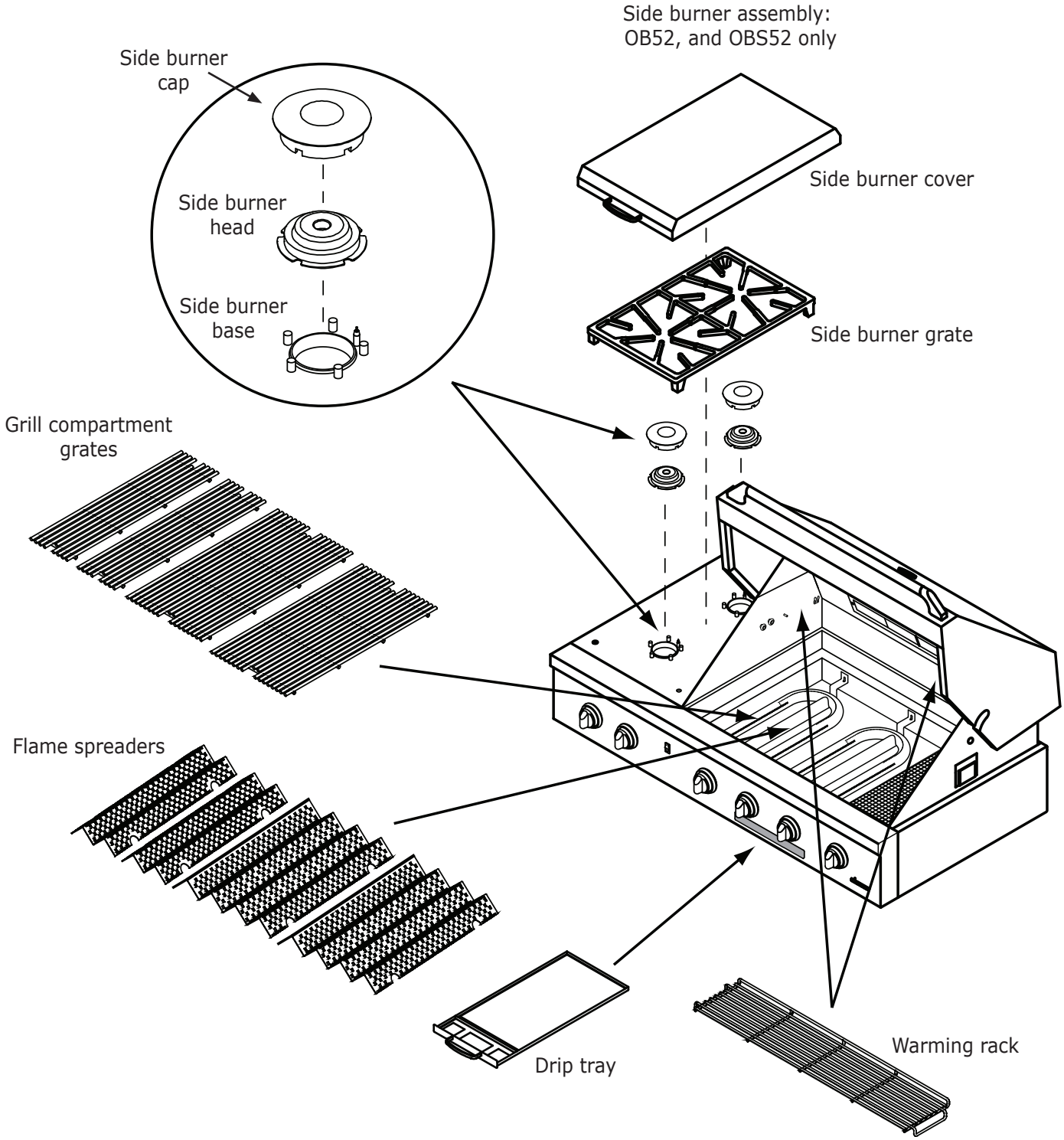

Outdoor Grill Assembly - Model OBS52 shown

LP Tank Connection

Instructions for LP tank connection and use for outdoor grills equipped for use with a portable LP tank.

⚠ WARNING

- Dacor outdoor grills are factory equipped for use with either LP or natural gas. DO NOT ATTEMPT FIELD CONVERSIONS FROM LP TO NATURAL GAS OR FROM NATURAL GAS TO LP.
- Use only a U.S. DOT or CSA approved LP gas supply tank. The LP tank must include a collar to protect the tank valve. A LP tank must be provided with a shut-off valve terminating in a liquid petroleum (LP) gas supply cylinder valve outlet specified, as applicable, for connection type 1. The cylinder supply system must be arranged for vapor withdrawal and provided with a listed overfilling prevention device.
- Never use a dented or rusty LP tank. If there is any question as to the soundness of the tank, have it checked by your LP supplier. Never use a tank with a damaged or defective shut-off valve.
- Use only the type 1 connector, hose and regulator assembly supplied with the outdoor grill, or a Dacor approved replacement.
- When the LP tank is enclosed, it must be ventilated by openings on the sides, back and floor of the enclosure. Each opening must have a total area of no less than 10 square inches. Keep the ventilation openings for the LP tank free and clear from debris.
- Check the gas supply line for damage before each use. Check for leaks after every tank change. NEVER check for leaks using a match or open flame.
- Do not use a tool to connect a LP tank. Damage resulting in an explosion hazard may occur.
- Always handle LP tanks with care. Do not drop or bump against sharp objects.
- When disconnecting and/or transporting a LP tank, always close the shut-off valve and cover the connector. Always keep a LP tank in the upright position. Keep it away from any sources of high heat.
- Never fill and LP tank beyond 80 percent full (by weight).
- Unused or extra LP tanks must be stored outdoors in a well-ventilated area out of the direct sunlight and/or sources of high heat, flames or sparks, out of reach of children. Do not store additional LP tanks in the enclosure under the unit. Cover the hose connection on the tank with a cover.
- Always close the shut-off valve on the LP tank when the appliance is not in use.
- An LP cylinder not connected for use shall not be stored in the vicinity of this or any other appliance.
- If the outdoor grill is stored indoors, the LP tank must be disconnected and removed from the appliance.
- If the above instructions are not followed exactly, a fire or explosion causing death or serious injury may occur.

Dacor outdoor grills are approved for a maximum LP tank capacity of 20 pounds (5 gallons). The tank must be constructed and marked in accordance with the specifications for LP-gas tanks of the U.S. Department of Transportation (DOT) or the National Standard of Canada, CAN/CSA-B339, tank, Spheres and Tubes of the Transportation of Dangerous Goods.

To Connect the LP Tank:

1. Check the gas connector from the outdoor grill and the LP tank connector. Make sure no dirt has accumulated inside. If there is debris inside, brush it out with a soft bristled brush or jet of air.
2. Put the LP tank in position under the appliance.
3. Make sure the gas shut-off valve on top of the LP tank is completely closed.
4. Insert the hose connector into the valve outlet. Tighten the plastic collar firmly into place. Hand tighten only.
5. After hose connector installation, open (turn on) the shut-off valve and check for leaks. Use a spray bottle to spray a soapy solution onto all the gas connections. If the solution bubbles, there is a leak. Close the shut-off valve and have the gas line repaired by a qualified service technician.
6. Close the gas shut-off valve.

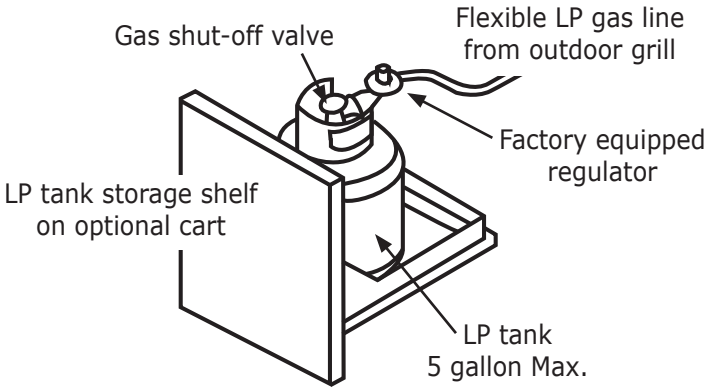

Operating Your Outdoor Grill

Tank-less Gas Supply

⚠ WARNING

Dacor outdoor grills are factory equipped for use with either LP or natural gas. DO NOT ATTEMPT FIELD CONVERSIONS FROM LP TO NATURAL GAS OR FROM NATURAL GAS TO LP.

Before using your outdoor grill for the first time:

- Make sure the gas line has been install and checked for leaks by a qualified installer.
- Locate the gas shut-off valve and make sure it is open (in the on position).

Important Operating Information

⚠ WARNING

- Always check the internal temperature of meats with a meat thermometer to determine doneness. See the ***Safe Cooking Temperature Chart*** on page 16.
- Do not operate the appliance without the knobs and trim rings in place.
- Do not expose the knobs or trim rings to direct flame, hot utensils or other sources of heat.

- Before each use, make sure the drip tray is clean and in place. Clean out any build-up in the bottom of the tray to avoid a fire hazard.
- To keep the burners operating properly, keep them clean. The more often you use your outdoor grill, the more often you need to clean the burners. See the ***Care and Cleaning*** section for cleaning instructions.
- Temperatures recommended in this manual are approximations. The best cooking temperature for your climate and weather conditions may vary.
- Avoid spills as much as possible. Porcelain grate surfaces are acid-resistant but not acid-proof. Some foods can cause permanent damage if allowed to remain on porcelain surfaces.

After Cooking

1. Remove the food to serve and close the canopy for safety.
2. Leave the outdoor grill on an additional five minutes to burn off excess grease. Doing so will help keep the burners from becoming clogged and help maintain good ignition system operation.
3. If using an LP tank, close the shut-off valve on the top of the tank once the outdoor grill is off and cool.

Selecting Cookware for the Side Burners (Models OB52, OBS52)

⚠ WARNING

- Use cookware only for its intended purpose. Check the manufacturer's recommendations before use to determine if a utensil is suitable for use on a cooking appliance. Certain types of glass, ceramic, and earthenware are not suitable for cooking on the grill or side burner. Personal injury or damage may result from the improper use of cookware.
- Utensils need to be large enough to contain the desired quantity of food without boil-overs or spill-overs. Choose pans with easy to hold handles that will stay cool while cooking. Do not use utensils with loose handles. Avoid using pans that are too heavy to lift safely.
- To avoid burns and scalding, always turn pan handles to a position where they cannot be easily hit. Also, handles should not extend over the adjacent burner. Always set utensils gently onto the grates and center them so that they are well-balanced.
- Do not drag cookware across the grates. Sliding may damage the finish. Lift utensils to reposition them. Do not drop them on the grate.
- Cookware with rough bottoms can cause permanent damage to the coated surfaces on the grates.
- To avoid burns or fire hazard when using the side burners, reduce the flame level if it extends beyond the bottom of the utensil. A flame that extends up the sides of the utensil is potentially dangerous.

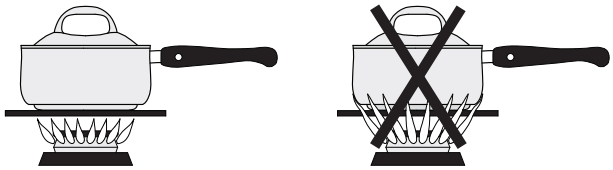

When using cookware, select the correct cooking utensil for the food being cooked for the sake of overall safety and best performance. Improperly selected cooking utensils will not cook evenly or efficiently.

Use cookware that:

- Is well balanced and has flat, smooth bottoms
- Has tight fitting lids to keep heat, odors and steam in.

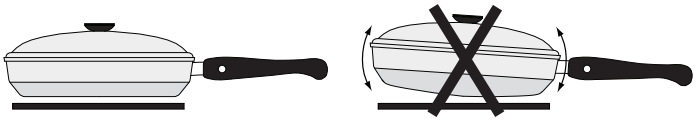

The largest recommended pot size for the side burners is 14 inches in diameter.

Operating Your Outdoor Grill

Lighting the Burners

⚠ WARNING

- Do not light the appliance if you smell gas. Call for service.
- To avoid a fire or explosion hazard, light the burners only as instructed. Keep all body parts away from the burners during lighting and use.
- **EXPLOSION HAZARD** - Do not light the outdoor grill with the canopy closed.
- Always inspect the gas line before use. If there is evidence of excessive abrasion or wear or it is damaged, have it replaced by a qualified service technician before operating the outdoor grill again.
- If using a LP tank, make sure the knobs are in the **OFF** position before opening the valve on the tank.
- Never use the outdoor grill in windy conditions.
- Do not turn the knob past the **LIGHT** position until lit. Doing so may result in a burst of flame that could cause burns or damage to the surrounding area.
- Do not touch any part of a burner while the igniter is sparking. An electrical shock may result.
- Never move the outdoor grill when cooking or when it is hot. Always keep the canopy closed when moving the grill cart.
- Spiders and insects can nest in the burners of this outdoor grill. This can obstruct the proper flow of gas into the burner and cause improper operation, fire hazard and potential damage to the unit. Periodically inspect the burners. If any of these symptoms occur, immediately refer to service or the ***Before You Call for Service*** section of this manual.
- If any burner flames are blown out by wind and do not automatically re-ignite within five seconds, turn the knob to off and wait five minutes for the gas to dissipate. Attempt a new ignition until you hear the constant clicking stop and you see flame ignition.
- Do not leave the canopy open when the outdoor grill is not in use to prevent an accumulation of water/moisture inside. If water accumulates in the grill compartment the unit should not be used and a service technician should be called to clean the inside of the compartment.
- If the appliance is left out in the rain (with the canopy shut), wait until 30 minutes after the rain storm ends before using it.
- **BLOW BACK HAZARD IN COLD WEATHER** - If lighting the rotisserie or optional sear burner in very cold weather, "blow back" may occur. After lighting, if you hear a whooshing sound, immediately turn the burner control knob off. Wait several minutes before trying to light the burner again.

Lighting and Preheating - Grill Compartment

1. Make sure the drip tray is in place.
2. Open the canopy to the fully open position.
3. If using a LP tank, make sure all control knobs are in the **OFF** position, then turn the valve on the top of the tank counter-clockwise to the fully open position.

OFF

4. Light one burner at a time. Push in on the knob for the burner you want to light and turn it counter-clockwise to the **LIGHT/HIGH** position. See the facing page for knob locations. The burner igniter will spark repeatedly until it lights. The spark makes a "clicking" sound. The burner should light within five seconds. If the burner does not ignite in five seconds, turn the burner knob to the **OFF** position. Keep the canopy open. Wait five minutes. Repeat the lighting procedure. If a burner does not ignite after three tries, you may light it manually (see page 12). Also see the ***Before You Call for Service*** section on page 22.

LIGHT/HIGH

5. Light all of the remaining burners (including the sear burner if equipped) in the grill compartment.

IMPORTANT

- Lighting all of the burners and preheating the grill compartment helps keep the components clean and makes them hot enough to vaporize juices that drip through the grate. Without a proper preheat, a residue will build on the components decreasing burner performance and causing ignitor malfunction.
- For outdoor grills equipped with the optional sear burner, see page 16 for sear burner use instructions.
- Light the rotisserie burner only if you will be performing rotisserie cooking. See page 13 for more information.

6. After the burners are lit, close the canopy and preheat with all burners on **HIGH** until the temperature gauge indicates the desired grilling temperature for the food being cooked. Normal cooking temperature varies between 225 to 500ºF (110 to 260ºC).
7. Turn the burner knobs further counter-clockwise to lower the flame and maintain the desired temperature. Preheat for five minutes more before cooking.
8. During cooking, check the food periodically using the temperature information on the ***Safe Cooking Temperature Chart*** on page 16. Check the internal meat temperature with a meat thermometer to determine doneness. The outdoor grill cooks more rapidly with the canopy shut, slower with it open.

Lighting the Side Burners (OB52 and OBS52 Only)

Each side burner control knob has an icon next to it to tell you which burner it operates.

1. Push in on the knob and turn it counter-clockwise to the **LIGHT/HIGH** position. The knob will illuminate and the igniter for the burner will spark (click) repeatedly until it lights. The burner should light within five seconds.
2. If the gas does not ignite after five seconds or if the flame goes out and gas escapes, turn the knob to the **OFF** position. Allow at least five minutes for the gas to dissipate.
3. Repeat the lighting procedure. If a burner still does not ignite, the igniter continues to spark or if the flame is not spread evenly around the burner cap, see the ***Before You Call for Service*** section on page 22. The burner(s) may also be lit manually (see page 12).
4. Place the cooking utensil on the grate.
5. Turn the control knob counter-clockwise to reduce the flame until it covers approximately 1/3 of the utensil diameter. Doing so will ensure even heating and reduce the likelihood of burning or scorching the food.

⚠ CAUTION

Do not put the burner cover over the side burners while hot. Excessive heat may cause permanent discoloration.

Burner Lighting Notes

- Dacor's automatic re-ignition system will automatically ignite an extinguished flame.
- If the igniter does not work for one of the standard burners, it may be lit using the manual lighting instructions. See page 12.
- A normal flame for the standard "U" burners and the side burners is steady and blue in color. Foreign material in the gas line, especially in new construction, may cause an orange flame during initial operation. It will disappear with further use. Small orange tips on the ends of the flames are normal when using LP gas.
- After a few minutes of use, the optional IR sear burner will glow red, which is normal.
- On side burners, the flame should burn evenly around the perimeter of the burner, except underneath each grate support finger, where the flame height is reduced by Dacor's Smart-Flame™ feature.
- When a side burner is cool, the igniter may continue to spark when the knob is set to the low position. The burner will stop sparking when warm. To reduce sparking when cold, operate the burner at a higher setting for about 60 seconds, then lower the flame to cook. The burner will also warm up faster if a utensil is placed on the grate. The igniter will also spark automatically if the flame is distorted by the wind.

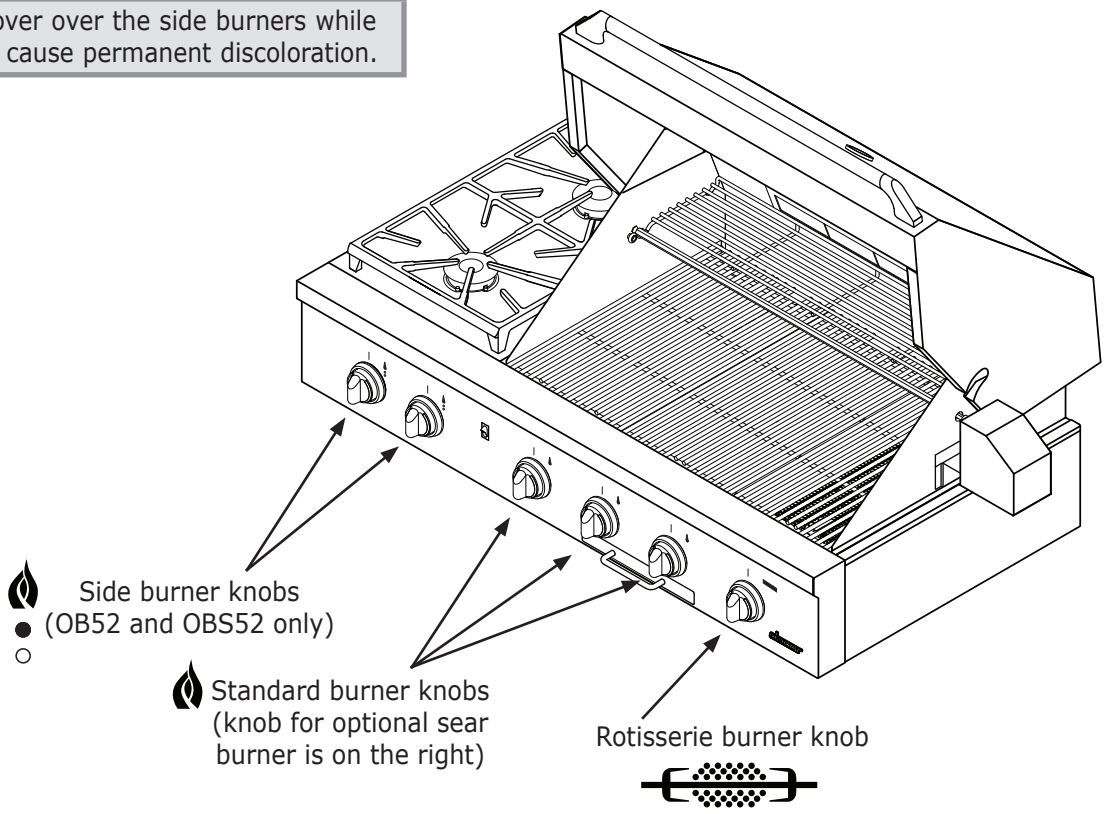

Burner Knob Locations - Model OBS52 Shown

Lighting the Burners (cont.)

Manual Lighting Procedures - Grill Compartment

⚠ WARNING

Use the manual lighting procedure only in the event that one or more of the igniters is not working:

- Use only the Dacor supplied match light tool or a long stemmed match.
- Do not attempt to light the optional sear burner without the grate above it in place. Do not attempt to light the standard burners without the flame spreaders in place.
- Make sure all control knobs are in the **OFF** position before performing the manual lighting procedure.
- If a flame that has been lit manually goes out, immediately turn the control knob to the **OFF** position to avoid a fire or explosion hazard. Allow five minutes for gas to dissipate before re-lighting it.

To manually light the rotisserie burner, see page 14.

To manually light the standard U shaped burners:

1. Make sure the drip tray is in place.
2. Make sure all control knobs are in the **OFF** position.
3. Open the canopy and remove all of the grates above the standard burners. If the appliance is equipped with the optional sear burner, leave the grate above it in place.
4. If using a LP tank, turn the valve on the top of the tank, counter-clockwise, to the fully open position.
5. Find the lighting hole in the front of the flame spreader located directly behind the front control panel for the burner you intend to light.
6. Use the provided match holder or a long stem match to light the burner manually. Push in on the control knob and turn it counter-clockwise while inserting a lit match into the lighting hole. If you do not experience immediate ignition, turn the knob back to the **OFF** position. Leave the canopy open and wait five minutes. Repeat the lighting procedure.
7. If the burner does not light after two tries, see the ***Before You Call for Service*** section on page 22.

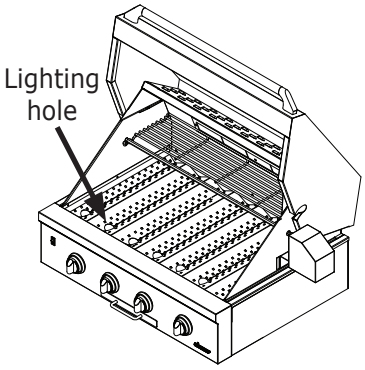

To manually light the optional sear burner:

1. Make sure the drip tray is in place.
2. Make sure all control knobs are in the **OFF** position.
3. Make sure the grate above the sear burner is in place.
4. If using a LP tank, turn the valve on the top of the tank, counter-clockwise, to the fully open position.
5. Use the provided match holder or a long stem match to light the burner manually. Insert a lit match at an angle through the grate above the sear burner. While keeping the lit end of the match a little above the surface of the sear burner, push in on the control knob and turn it counter-clockwise. If you do not experience immediate ignition, turn the knob back to the **OFF** position. Leave the canopy open and wait five minutes. Repeat the lighting procedure.

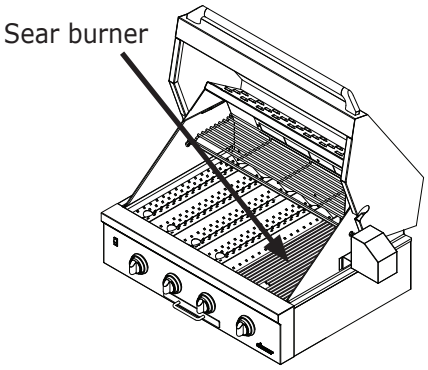

6. If the burner does not light after two tries, see the ***Before You Call for Service*** section on page 22.

To manually light one of the optional sear burners:

1. Make sure the drip tray is in place.
2. Make sure all control knobs are in the **OFF** position.
3. If using a LP tank, turn the valve on the top of the tank, counter-clockwise, to the fully open position.
4. Use the provided match holder or a long stem match to light the burner manually. With the end of the lit match next to the burner holes, push in on the corresponding control knob and turn it counter-clockwise. If you do not experience immediate ignition, turn the knob back to the **OFF** position. Wait five minutes, and repeat the lighting procedure.
5. If the burner does not light after two tries, see the ***Before You Call for Service*** section on page 22.

Rotisserie Cooking

⚠ WARNING

- To avoid an explosion or fire hazard, do not use the rotisserie burner during high wind conditions.
- To avoid an electric shock and burn hazard, keep all body parts away from the rotisserie burner during lighting and use.
- The rotisserie burner flame may be difficult to see in bright sunny conditions.
- To avoid damage and an electric shock hazard due to moisture damage, unplug and remove the rotisserie motor when not in use. Store it in a clean, dry place.

Rotisserie cooking utilizes the intense searing heat of an infrared (IR) burner to cook many different types of meat. As the motor slowly rotates the rotisserie rod, the meat sears and cooks evenly on all sides, producing flavorful, crispy-browned and juicy meats.

Things to Know About the Rotisserie

- The rotisserie burner can be used in conjunction with the standard burners and the smoker box.
- The rotisserie burner does not need to be preheated before using it. In fact, it is easier to insert the rotisserie rod before lighting.
- The maximum amount of weight that the rotisserie can hold is 17 pounds.

Preparing to Use the Rotisserie

⚠ WARNING

If the outdoor grill is hot, use hot pads to handle the rotisserie rod and motor. Keep hands away from the rotisserie burner by handling the rotisserie rod near the ends.

1. Open the canopy.
2. If the warming rack is in place inside the grill compartment, remove it.

⚠ CAUTION

Always use cotton string to truss meats. Do not use nylon or plastic string, because it will melt.

3. Put one of the rotisserie forks on the blunt end of the rotisserie rod with the points toward the center.
4. Push the food onto the pointed end of the rotisserie rod and center it.
5. Slide the second rotisserie fork onto the rod with the points toward the meat.
6. Slide both forks toward the center, skewering the meat. Tighten both forks using the attached thumb screws.
7. Attach the rotisserie motor to the side of the outdoor grill by slipping the edge of the bracket down into the slot on the right side of the frame. The canopy must be open.

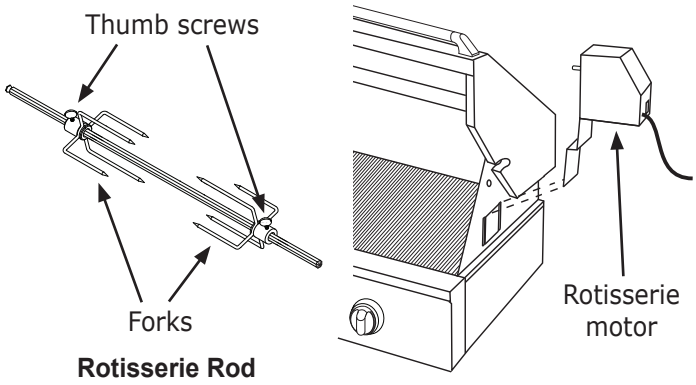

Rotisserie Rod

8. Make sure the motor switch is in the off position. Plug the power cord into a three prong grounded electrical outlet equipped for use with outdoor appliances. An electrical outlet equipped with a ground fault interrupter (GFI) is highly recommended to minimize the risk of injury due to an electric shock.

Rotisserie Operation

IMPORTANT

- To prevent the rotisserie burner from becoming clogged, leave it on for five minutes after removing the meat to burn off any spattered grease.
- The rotisserie burner is not intended for use with the warming rack in place. Remove the warming rack before lighting the rotisserie burner.
- When only the rotisserie burner is in use, the canopy temperature gauge does not accurately indicate the cooking temperature.

The IR rotisserie burner requires about a minute to heat up to cooking temperature. After a few minutes of use the burner will glow red, which is normal.

The rotisserie burner requires no preheating and can be used in conjunction with the standard burners, the optional sear burner and the smoker box.

1. Make sure the drip tray is in place.
2. Insert the pointed end of the rod into the rotisserie motor drive hole inside the compartment. Rest the other end on the rollers on the left side.
3. Loosen the thumb screws on the rotisserie forks. Slide the meat to center it in front of the rotisserie burner (the white ceramic piece on the back wall of the grill compartment). Tighten the thumb screws firmly.

Continued...

Rotisserie Cooking (cont.)

4. Make sure the motor power cord is routed away from all surfaces that become hot when any of the burners are lit.
5. Turn on the motor and watch the meat rotate several times. Make sure the food is rotating evenly and does not rub against the rotisserie burner. If necessary, turn off the motor, remove the rotisserie rod and readjust. If the food is not rotating properly, it will not cook evenly.
6. Push in on the rotisserie burner control knob and turn it counter-clockwise to the **LIGHT/HIGH** position. The igniter will spark repeatedly until the burner lights. The spark makes a "clicking" sound. The burner should light within five seconds. A minute after lighting, the rotisserie burner will begin to glow red. If the burner does not ignite in five seconds, turn the burner knob to the **OFF** position. Keep the canopy open. Wait five minutes. Repeat the lighting procedure. If the burner does not ignite after three tries, you may use the manual lighting procedure. Also see the ***Before You Call for Service*** section on page 22.

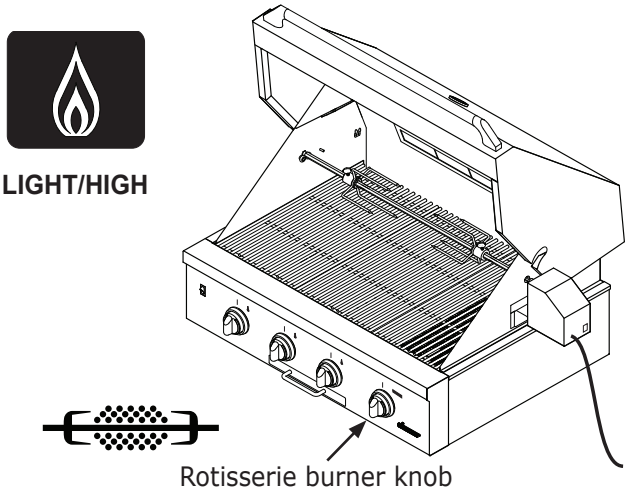

7. Dacor recommends that you place a rimmed pan underneath the food to catch juices and prevent flare-ups.
8. Close the canopy.
9. During cooking, check the food periodically using the temperature information on the ***Safe Cooking Temperature Chart*** on page 16. Check the internal meat temperature with a meat thermometer to determine doneness.
10. If the food is done, remove the entire rotisserie rod with hot pads. Put it on a clean cookie sheet.
11. Use hot pads to loosen the thumb screws and remove the rotisserie rod and forks.
12. Allow the meat to rest for 10 to 15 minutes before carving.

Manual Lighting Procedure - Rotisserie

1. Make sure the drip tray is in place.
2. Make sure all control knobs are in the **OFF** position.
3. If using a LP tank, turn the valve on the top of the tank, counter-clockwise, to the fully open position.
4. Use the provided match holder or a long stem match to light the burner manually. Push in on the rotisserie burner control knob and turn it counter-clockwise while holding the end of the lit match just below the rotisserie burner igniter electrodes (the two wires on the left side of the burner). If you do not experience immediate ignition, turn the knob back to the **OFF** position. Leave the canopy open and wait five minutes. Repeat the lighting procedure.

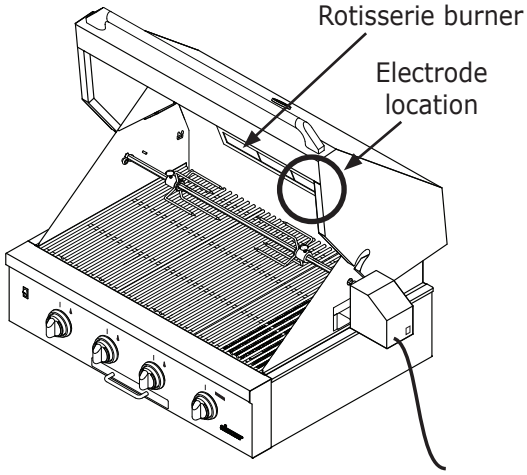

5. If the burner does not light after two tries, see the ***Before You Call for Service*** section on page 22.

Smoker Cooking

Use the smoker box to add a smoked flavor to grilled foods. You can also use the smoker box with the rotisserie. Smoking is always performed with the canopy closed.

⚠ WARNING

- Smoker wood chips are soaked with liquids which create steam and smoke while grilling. This steam can be very hot and dangerous.
- Frequently, the smoker box will need to be refilled during cooking. Proceed with caution. The box will be extremely hot. Steam and hot metal surfaces can cause personal injury and possible fire.
- Using wood chips that have not been properly soaked will catch fire (small red embers will appear in the smoker box). If the wood chips begin to catch fire, add a small amount of water. Wear hot pads and keep body parts clear while adding the water to avoid steam burns.

Using the Smoker Box

1. While the outdoor grill is cool, remove one of the small grates and a small flame spreader from inside the grill compartment. Rearrange the existing grates and flame spreaders to leave an opening where you want to insert the smoker box. Dacor suggests using the far left side. **NOTE:** You can not put the smoker box over the top of the optional sear burner, which is located on the right side.
2. Before lighting the outdoor grill, soak about two to three generous handfuls of your choice of wood chips for at least 30 minutes. Refer to the chart, right, for wood types, characteristics and foods to smoke with each type of wood chip.
3. Pour off the water from the soaked chips and fill the smoker box about half way. Close the smoker box lid. Reserve some chips to add later.
4. After loading the smoker box with the soaked wood chips and while the outdoor grill is still cool, insert the box into the grill compartment in place of the grate removed in step 1.

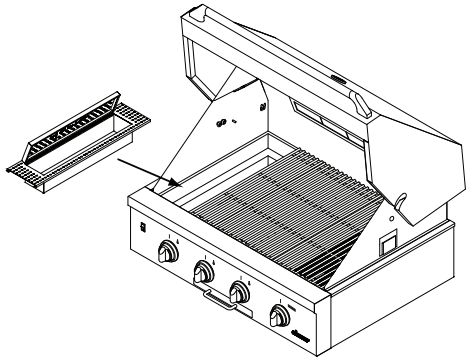

5. With the canopy closed, preheat the outdoor grill to a temperature of 225 to 300ºF. Make sure the burner under the smoker box is lit. Once the outdoor grill reaches the above temperature range, allow an additional 15 to 20 minutes for smoke to gather inside the grill compartment.
6. Open the canopy and place the food on the grates as close to the smoker box as possible. Doing so will allow the smoked flavor to penetrate the meat.
7. Close the canopy. During cooking, check the food periodically using the temperature information on the ***Safe Cooking Temperature Chart*** on page 16. Check the internal meat temperature with a meat thermometer to determine doneness.

Adding more wood chips:

- Wood chips should smoke for about 15 to 20 minutes. Adjust the flame under the smoker box if the wood chips burn too quickly.
- Replace the chips frequently during the smoking process. Use hot pads and tongs because the smoker box will be very hot. Do not remove the hot smoker box. Instead, have the chips drained and ready to go into the smoker box. **NOTE:** When you open the canopy, you extend cooking times due to escaping heat.

Smoker Wood Chip Types

Wood Type	Type of Smoke	Good for Cooking
Alder	Light delicate smoke	Various types of fish, especially salmon and swordfish. Also good for chicken and pork.
Apple/ Cherry	Sweet fruity smoke	Chicken, turkey, ham, pork and game birds.
Hickory	Smoky, sharp flavor for true southern barbecue	Pork ribs and shoulder, chicken, beef, wild game and cheeses.
Maple	Sweet and mild smoke	Poultry, vegetables, ham and bacon
Mesquite	Sweet, burns hot, can be bitter if burned for a long time	Most meats (especially beef) and most vegetables
Oak	Distinctive and pleasant smoke	Brisket, chicken and pork
Pecan	More subtle flavor than hickory Burns easily, good for lower temperature smoking	Pork, chicken, lamb, fish and cheeses.

Using the Optional Sear Burner

Models OBS36 and OBS52 Only

The optional infrared (IR) sear burner is located on the right side of the grill compartment. It quickly sears meat to lock in flavor and juices. The meat also absorbs smoke and food aroma the burner produces when it vaporizes the grease and drippings. Once the outside of the meat is seared, move it to a standard burner to prevent burning and to finish cooking it all the way through. The exact amount of time required to sear the meat before transfer varies with the type and thickness of meat. Dacor's Sear Control Technology™ allows you to adjust the sear burner intensity. **NOTE:** The sear burner is not intended for cooking food until done. It is intended only to sear meat quickly before it is transferred to a standard burner.

LIGHT/HIGH

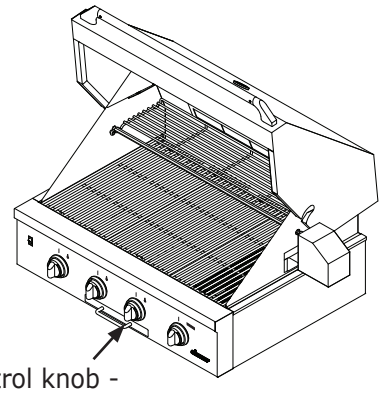

Option sear burner control knob - models OBS36 and OBS52 only*

To cook using the sear burner:

1. Light and preheat the outdoor grill according to the instructions on page 10. The sear burner itself must preheat on **HIGH** for a minimum of five minutes.
2. Thaw the meat and trim the excess fat.
3. Place the meat on the grate above the sear burner. Allow the meat to sear on one side (brown with grate strips). The time required to sear depends on the meat type and thickness. Adjust the heat level and/or time accordingly to prevent burning.
4. Flip the meat and sear on the other side for about the same amount of time.
5. Flip the meat onto one of the standard burners set on medium heat.
6. Cook/flip the meat until it is done to your preference.

IMPORTANT

To prevent the sear burner from becoming clogged with grease, leave it on for an additional five minutes after you are done cooking.

* On models OB36 and OB52 a standard "U" burner takes the place of the sear burner.

Safe Cooking Temperature Chart

Below is the USDA Minimum Safe Cooking Temperature for Various Foods.* Temperatures are obtained using a meat thermometer inserted into the food.

Ground Meat and Meat Mixtures	
Beef, pork veal, lamb	160°F
Turkey, chicken	165°F
Fresh Beef, Veal and Lamb	
Medium rare	145°F
Medium	160°F
Well done	170°F
Poultry	
Chicken and turkey, whole (temperature taken in thigh)	165°F
Poultry breasts, roast	165°F
Poultry thighs, wings, legs	165°F
Duck and goose	165°F
Stuffing	165°F
Fresh Pork	
Medium	160°F
Well done	170°F
Ham	
Fresh (raw)	160°F
Pre-cooked (reheat)	140°F

* This information is subject to change without notice. Contact the USDA Meat and Poultry Hot Line for the latest information:

1-888-MPHotline
or www.fsis.usda.gov

Cleaning Instructions

- To keep your outdoor grill looking and operating its best, clean it after every use. Spills that remain on the parts may be very difficult to clean, especially if allowed to burn on. Certain types of food, such as tomatoes, citrus juices, vinegar, alcohol and milk can damage the finishes if you allow them to stand for any length of time.
- Porcelain parts are exposed to extremely high temperatures and high acid foods. They are also put under a lot of stress when hot utensils are placed on them. These severe operating conditions, cause the porcelain enamel parts on your outdoor grill to undergo a change in appearance over time. If you care for and clean these parts carefully, you will slow down, but not eliminate, the aging process.

⚠ WARNING

- To avoid an electrical shock or fire hazard, disconnect the power plug and close the gas shut-off valve before cleaning.
- Avoid the potential for grease fires by frequently cleaning the drip tray.
- Check and clean the burner/venturi tubes for insects and insect nests regularly. A clogged tube can create a fire hazard.
- To avoid burns, make sure that all parts are cool before cleaning or removing the drip tray.
- Do not submerse the rotisserie motor in water or cleaning fluids. Do not allow water or cleaning fluids to get into the holes or slots on the rotisserie motor.
- Do not use a steam cleaner to clean the outdoor grill or rotisserie motor. Steam could penetrate the electrical components and cause a short circuit.
- After cleaning, make sure the burners, the flame spreaders, the grates and the drip tray are dry and completely reassembled before use.
- Use only the cleaners specified to clean this appliance. Other cleaners may cause permanent damage to surfaces. Do not use aerosol cleaners. They may be flammable or cause corrosion of metal parts. Use only a sponge, soft cloth, fibrous or plastic brush or nylon pad for cleaning the surfaces of your outdoor grill.
- Do not clean any of the outdoor grill parts in a dishwasher. They may be damaged.
- Do not attempt to manually clean the rotisserie burner or optional sear burner. Burn off grease and grime according to these instructions.
- Do not try to remove heavy spills with a sharp object such as a knife or metal spatula. Sharp objects may scratch your outdoor grill's surfaces.

Cleaning the Grill Compartment

Disconnect the power cord from the electrical outlet and close the gas shut-off valve before cleaning.

Cleaning the Grill Compartment Interior and Standard U Shaped Burners

1. When the outdoor grill is cool, open the canopy and remove the grates and flame spreaders from the grill compartment. Remove the drip tray.
2. The "U" burner ignitors are the two wire electrodes located under a cover just behind the front panel, inside the grill compartment. Each "U" burner has one set. The ignitors must be clean for proper operation. To clean, gently brush completely around the igniter electrodes. A stiff toothbrush is ideal for this purpose. Use care while cleaning them because they will not work properly if bent. The porcelain bases holding the electrodes in place can also crack or break if not treated with care. Do not use water to clean the igniters. If necessary, use a small amount of rubbing alcohol to help dissolve grime.
3. Clean the "U" burners with a steel brush. Clear blocked holes on the burners with a straightened paper clip, needle or wire. If there is excessive grime and grease build up, the "U" burners may be removed from the grill compartment for cleaning. Remove the burners also to inspect inside for insects and insect nests. See page 21 for the burner removal instructions.
4. Clean the inside of the grill compartment with a solution of hot dishwashing soap and the coarse side of a sponge. Rinse and dry with a soft, lint-free cloth.
5. If there is excessive grime and grease build up around the drip tray cover, located on the floor of the compartment, it may be removed for cleaning.

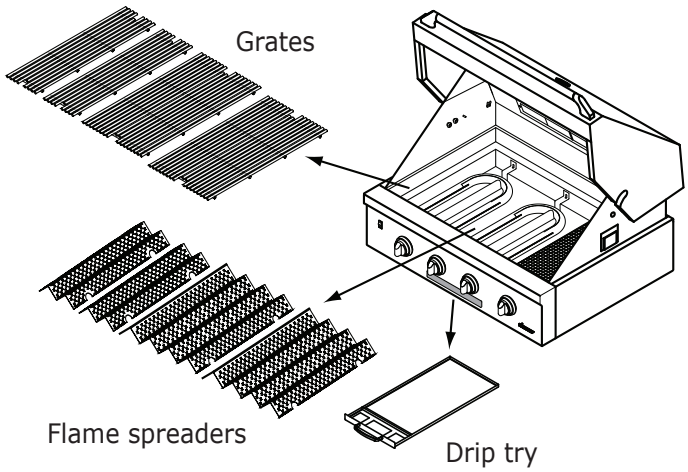

Cleaning the Porcelain Grates and Warming Rack

- The standard grates and warming rack that come with the appliance are coated with a porcelain finish. For everyday cleaning, use a soft cloth or non-abrasive pad with warm soapy water to clean all of the porcelain parts.
- If necessary, tough stains may be removed by applying full strength sprays such as Simple Green, Ajax All-Purpose Cleaner or Formula 409™. To minimize wear, use the mildest cleaner needed to get the surface clean.
- For extremely stubborn stains, you may use a mildly abrasive cleaner or applicator, such as Soft Scrub, Bon Ami, S.O.S. pads or other soap-filled steel wool pads. Use these cleaners with extreme care and only on occasion. Extensive use of these types of abrasives will eventually damage the porcelain enamel.

Cleaning the Drip Tray and Flame Spreaders

- To clean the drip tray and flame spreaders, scrub with a solution of hot dishwashing soap and the coarse side of a sponge. When you need to clean heavy soil, use a scouring pad such as steel wool with plenty of water. Use steel wool with extreme care and only on occasion. Do not use steel wool on the front of the drip tray panel. You may also use a solution of one cup of ammonia to two gallons of water.

Cleaning the Rotisserie Burner and Optional Sear Burner

- The rotisserie burner and optional sear burner are cleaned by leaving them on at high heat for five minutes after cooking.
- If there is excessive grime and grease build up around the outside and below the sear burner, it may be removed from the grill compartment for cleaning.

⚠ CAUTION

Gently center the hole on end of the gas supply tube on the sear burner over the feeder tube under the control panel as you reinstall it to prevent damage.

- Over time, ash may build up on the burner surface(s). Brush, blow or vacuum the ash from the burner surface(s) when the burners are cool.

Cleaning the Smoker Box

- When the smoker box and the wood remnants inside are cool, remove it for cleaning. Dump out the wood remnants and wash the smoker box with warm water and dish soap. Rinse the box well and dry it.

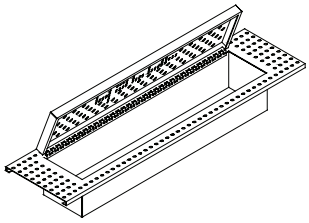

Cleaning the Rotisserie Parts

1. Clean the rotisserie rod and forks with a solution of hot dishwashing soap and the coarse side of a sponge. Rinse and dry with a soft, lint-free cloth.
2. Wipe the outside surface of the rotisserie motor with a soft damp cloth. Apply a small amount of dishwashing soap to the cloth to cut grease. Be careful not to get fluid inside the openings in the motor.

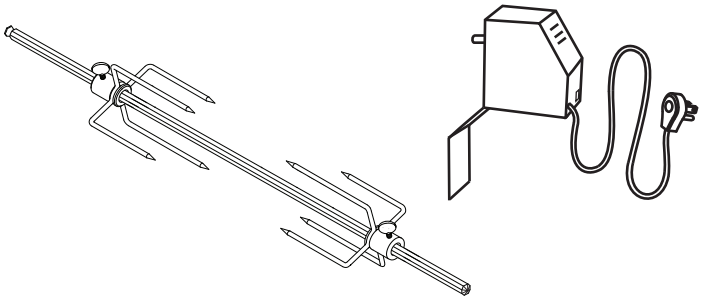

Cleaning the Light Lenses

The light lenses are made of glass. Use any of the following to clean them:

- Non-abrasive cleaners
- Glass cleaners
- Warm soapy water

For tough stains, scrub the light lenses with the rough side of a sponge and warm, soapy water. Be careful not to scratch the surface.

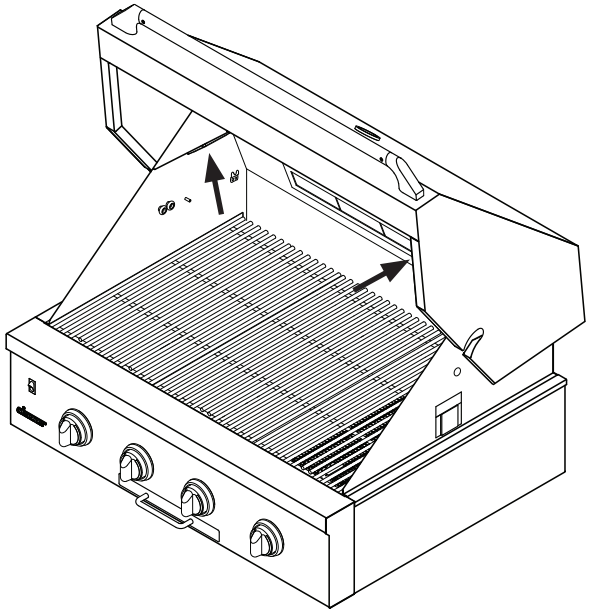

Light Fixture Locations

Reassemble the flame spreaders and grates

Reassemble the grill compartment components according to the ***Setting Up You Outdoor Grill*** section of this manual.

Cleaning the Side Burners (Models OB52 and OBS52)

IMPORTANT

- Cover the side burners with the included stainless steel burner cover when they are not in use and cool. Doing so will protect them and help keep them clean.
- The igniter will not work properly if the burner cap, burner head, burner base or the igniter itself are not clean. A dirty or wet igniter may not spark at all. Keep the igniters clean and dry to reduce this problem and avoid unnecessary service calls.

1. Remove the grate and disassemble the side burners underneath for cleaning as shown. After disassembling them, check for any dirt or grime deposited on the individual parts, including the igniters.
2. Brush completely around the igniter, including over and under the edge of the metal top and porcelain base. A stiff toothbrush is ideal for this task. Use care while cleaning because the porcelain igniter base is fragile and can crack or break. Do not use water to clean the igniters. If necessary, use a small amount of rubbing alcohol to help dissolve grime.

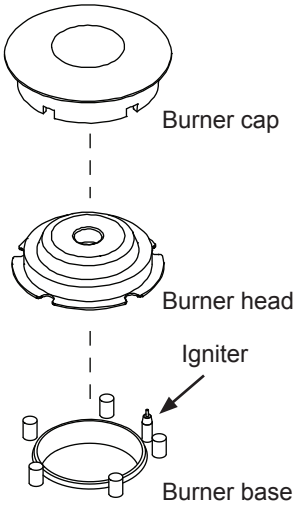

3. Examine the burner caps. Remove anything stuck in the holes with a straightened paper clip, wire or needle. Be careful not to scratch or damage it. Do not distort the shape of the holes.
4. Clean the burner cap and head with window cleaner or rubbing alcohol. Use a cleaning brush with plastic bristles or a firm tooth brush. When done, rinse the parts well with clean water. Dry the parts thoroughly before re-assembling them.
5. Test the burners after re-assembly. If the flame is uneven, be sure that the brass burner cap and the burner head are properly positioned. Check for any dirt or grime in the burner cap. If erratic clicking is still present, make sure the igniter is completely dry. If the unit still exhibits problems after drying, call your local Dacor Authorized Service Agent.

Cleaning the Exterior

Knobs and Trim Rings

CAUTION

- Do not soak the knobs in water or put them in a dishwasher.
- Do not remove the trim rings from the appliance. Clean only the outside edges of the trim rings. If you get moisture inside the trim rings, damage to the electronic components can occur.
- Do not expose the knobs to hot objects, intense heat or direct flame. Damage may result.

- Wash the knobs regularly with a solution of warm soapy water. Dacor recommends hand dishwashing liquid.
- Turn the knobs to the off position to remove them for cleaning or replacement.
- Grasp each knob and pull straight back, off of the valve shaft.
- Clean the outside edges of the trim rings while the knobs are removed. Wipe them with a soft damp rag.
- To replace the knobs, align the "D-shaped" opening on the back of the knob with the end of the valve shaft. Carefully push the knob on until it stops.

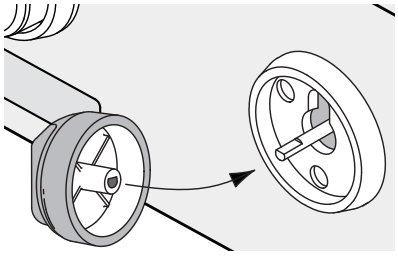

Exterior Stainless Steel Surfaces, Chrome and Other Metal Surfaces

CAUTION

- Always wipe stainless steel (silver colored) surfaces with the grain.
- To prevent scratching, do not use abrasive cleaners or scrubbers on stainless steel or other metal surfaces.

- Clean the exterior stainless steel surfaces with the Dacor Stainless Steel Cleaner included with your appliance. Use it according to the directions on the package. See the ***Parts and Accessories*** section to order additional cleaner.
- You may also use a mild solution of detergent and warm water on stainless steel surfaces. Rinse and dry with a soft, lint-free cloth.
- To clean other metal surfaces, use a soft cloth with a mild solution of detergent and warm water. Rinse and dry with a soft, lint-free cloth.

Light Bulb Replacement

⚠ WARNING

- To avoid an electrical shock and fire hazard, be sure to disconnect the outdoor grill power cord from the electrical outlet and close the gas shut-off valve when replacing the light bulb(s).
- To avoid personal injury, make sure the outdoor grill and the light bulb(s) are cool before replacing the light bulb(s).
- Always make sure the lens covers are in place when using the outdoor grill. The lens covers protect the bulbs from breakage.
- Replacing the lens cover without lining up the cutout with the light socket will damage the light fixture.
- Do not use a screwdriver to remove the lens.

Light bulb replacement is considered to be a homeowner maintenance operation. Your outdoor grill has halogen lights to enhance the view inside the canopy. Each light assembly consists of a removable lens cover and a 20 Watt 12 Volt halogen bulb, as well as the light fixture housing. If the light does not work, before replacing it, please consult the ***Problem Solution Guide*** on page 22.

IMPORTANT

To increase bulb life, use a glove when handling the bulb. Oils from your hand may reduce bulb life.

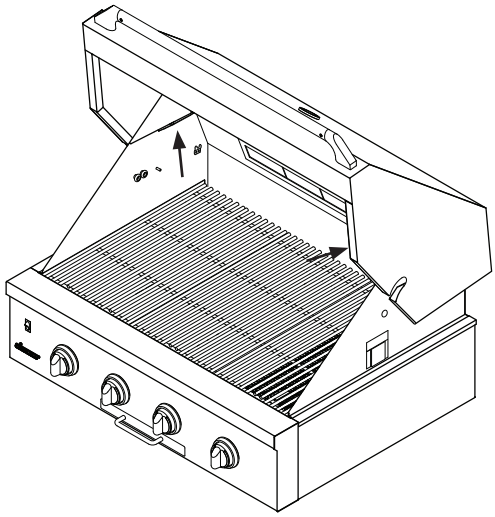

Light Fixture Locations

To replace a light bulb, follow these steps:

1. Replace the light bulb only with Dacor part number 100429. See the page 22 for ordering information.
2. Disconnect the outdoor grill power cord from the electrical outlet.
3. Hold your hand under the lens for support and gently pry it loose using a spatula or table knife. Pull the lens cover straight out.
4. Grasp the old bulb and pull it straight out of the socket.
5. Using a glove, insert the new bulb into the socket.
6. To reinstall the lens, first line up the lens and the light fixture, with the cutout toward the bottom. Gently press the lens into its original position.
7. Reconnect the power cord.

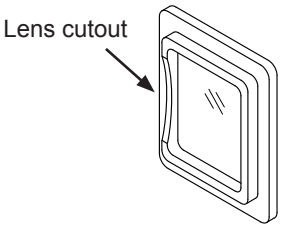

Back of Lens

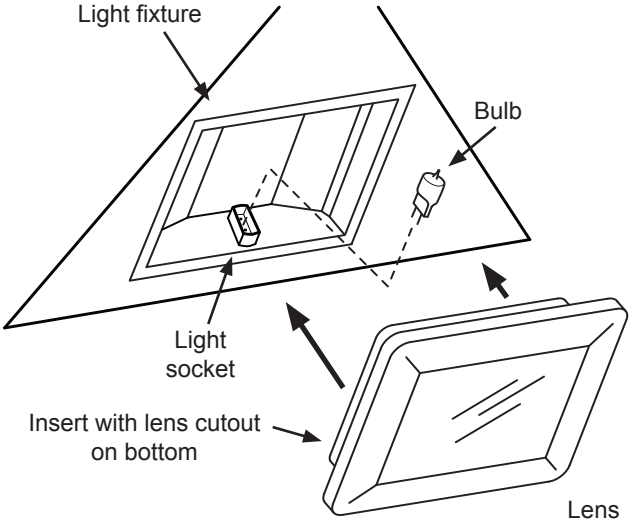

Light Bulb Installation

Standard "U" Burner Removal and Replacement

⚠ WARNING

- To avoid an electrical shock and fire hazard, be sure to disconnect the outdoor grill power cord from the electrical outlet and close the gas shut-off valve when cleaning or servicing the burners.
- Do not disassemble the appliance unless it is cool.

The "U" burners can be removed for cleaning and inspection. Models OB36 and OB52 are equipped with three, models OBS36 and OBS52 are equipped with two.

To Remove:

1. Disconnect the outdoor grill power cord from the electrical outlet.
2. Close the gas shut-off valve.
3. Open the canopy and remove the grates and flame spreaders from the grill compartment.
4. Remove the burner cap nuts. They are located on the inside back panel just above the end of each burner.
5. Lift the burner up at the back and slide towards the back of the compartment to remove.

To Reinstall:

1. Slide the mounting pins and gas supply tube on each burner into the holes on the back of the control panel inside the grill compartment. Slide the hole on each burner bracket over the studs at the back of the compartment.
2. Attach the burner brackets to the studs using the existing cap nuts.
3. Re-install the flame spreaders and grates.
4. Reconnect the power cord. Turn on the gas supply and test the burners for proper operation.
5. On units equipped with a LP tank, close the gas shut-off valve on top after testing.

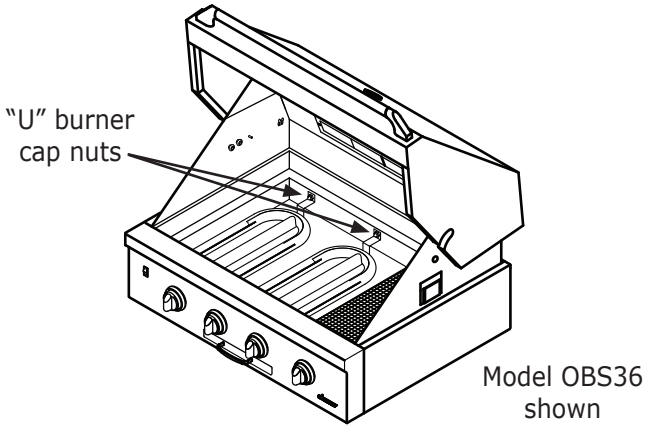

Testing/Resetting the Ground Fault Interrupter (GFI)

The optional outdoor grill cart for models OB36 and OBS36 is equipped with a GFI to minimize the risk of injury due to an electric shock in the event of a short circuit. If your outdoor grill is connected to a GFI outlet that is not part of a Dacor grill cart, the following instructions still apply.

A GFI detects the possibility of an electric shock condition and disconnects power to the electrical receptacles next to the buttons. When the GFI disconnects (or trips), the RESET button on the outlet pops out slightly. The GFI should be tested periodically to make sure it is working properly.

To test a GFI:

1. Disconnect all power plugs from all of the receptacles on the GFI electrical outlet.
2. Push in on the TEST button and release.
3. The RESET button should trip immediately.
4. Push in on the RESET button after it trips to turn power back on.

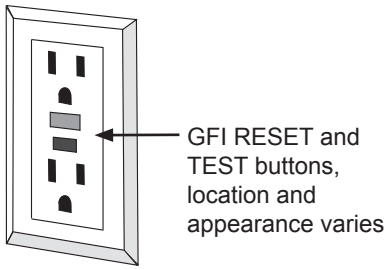

If the RESET button does not pop out during testing:

1. Keep all plugs disconnected from the electrical outlet.
2. Call a licensed electrician to have the outlet repaired. Do not use the outlet until repairs are made.

If the GFI trips when the TEST button is not being pushed:

- Push in on the RESET button.

If the GFI trips immediately when reset or when an appliance is turned on:

1. Disconnect all plugs from the outlet and push the RESET button. If the GFI trips immediately, leave all appliances disconnected and call a licensed electrician to repair the electrical outlet. Do not use the outlet until it is repaired.
2. If the GFI does not trip with all the appliances disconnected, plug in the appliance/rotisserie plugs and turn them on one at a time. If the GFI trips when an appliance/device is plugged in and turned on, call for service. See page 23 for service information.

Parts and Accessories

Description	Dacor Part Number
Dacor Stainless Steel Cleaner	A302
Replacement halogen light bulb (12 Vac, 20 Watt)	100429
Vinyl cover for built-in 36” outdoor grill	OVBC36
Vinyl cover for built-in 52” outdoor grill	OVBC52
Vinyl cover for 36” outdoor grill and cart	OVCC36
Rotisserie motor assembly	700482
Rotisserie rod	101179
Rotisserie forks (set of 2)	AGFS
Replacement porcelain warming rack	101154
Replacement side burner grate	72436SB
Replacement Porcelain grate (11” X 22”)	101163
Replacement Porcelain grate (5.5” X 22”)	101164
Flame spreader (large)	36628
Flame spreader (small)	36661
Smoker box	27738
Standard “U” shaped burner	72153
Regulator assembly, single stage, OB36 and OBS36 (for use with a 20 lb. LP tank)	72310
Regulator assembly, two stage, OB52 and OBS52 (for use with a 20 lb. LP tank)	101578
Regulator assembly, LP (for use with whole house LP installations)	700597LP
Regulator assembly, natural gas (for use with whole house natural gas installations)	700597NG

To order parts and accessories, contact your Dacor dealer or visit www.everythingdacor.com.

Before You Call for Service

Problem Solution Guide

Problem	May be caused by	What to do
Nothing works. Igniters do not spark (no clicking sound).	Outdoor grill not connected to electrical power.	Connect power plug to electrical outlet .
	Power to electrical outlet is off.	Check for tripped circuit breaker or blown fuse. Check also for tripped ground fault interrupter (see page 21).
	Power outage.	Contact power company.
	Wet or dirty igniter.	Clean according to ***Care and Cleaning*** section.
	Extension cord not providing adequate ground.	If appliance is connected to an extension cord, check the extension cord.
Sparking, but no flame (burners make a clicking sound, but do not ignite).	Wet or dirty igniter.	Clean and dry according to ***Care and Cleaning*** section.
	Gas is turned off.	Make sure the gas shut-off valve is open.
	Gas supply interrupted.	Natural gas units: Contact gas company. LP tank units: Make sure the tank is not empty. Whole house LP units: Check gas supply.
	Burners are clogged or dirty.	Clean according to ***Care and Cleaning*** section.

Before You Call for Service

Problem	May be caused by	What to do
Standard "U" burner flame is distorted or uneven.	Burners are clogged or dirty	Clean according to ***Care and Cleaning*** section.
Side burner flame is distorted, yellow or very large.	Burner cap not properly positioned (side burners only).	Make sure burner is assembled according to the ***Setting Up Your Outdoor Grill*** section.
	Outdoor grill set up to use a different type of gas (natural or LP).	Have qualified service technician check to make sure that the outdoor grill is set up for the type of gas.
	Gas regulator is not installed, faulty or set for wrong type of gas.	Have qualified service technician check the gas regulator.
Igniter continues to spark (click) after flame ignites.	Burner is cold (side burners only).	Burners may continue to spark for up to 60 seconds when cold and set to low. See ***Operating Your Outdoor Grill*** section for more information on how to minimize.
	Burner cap not properly positioned (side burners only).	Make sure burner is assembled according to the ***Setting Up Your Outdoor Grill section***.
	Flame distorted by air draft.	Minimize any air drafts around the grill.
	Wet or dirty igniter.	Clean according to ***Care and Cleaning*** section.
	Burners are clogged or dirty.	Clean according to ***Care and Cleaning*** section.
	Low gas pressure.	Contact gas company (natural gas units only).
	Electrical outlet polarity reversed.	Have a licensed electrician check the electrical outlet for correct polarity.
Flame goes out at low setting.	Air intake holes under control panel are covered or obstructed.	Check to make sure air holes under knobs are not blocked. Check to make sure the appliance is properly installed so that air flows freely into the holes under the control panel.
	Low gas pressure.	Contact gas company (natural gas units only).
Lights do not work.	No power.	See ***Nothing Works*** above.
	Light bulb(s) burned out.	See ***Care and Cleaning*** section.

Warranty and Service

Getting Help

Before you request service:

1. Review the ***Before You Call For Service*** section.
2. Use the helpful tips found in our ***Problem Solution Guide***.
3. Become familiar with the warranty terms and conditions of your product on the following page.
4. If none of these tips or suggestions resolves your problem, call our Customer Service center at the number below.

Dacor's Customer Service center is available 6:00 A.M. – 5:00 P.M. Pacific Time

For warranty repairs or questions and for Dacor Distinctive Service (DDS) in the US and Canada
Phone: (800) 793-0093, extension 2822

For non-warranty repairs or questions in the US and Canada
Phone: (800) 793-0093, extension 2813

Contact us through our web site at: www.dacor.com/contact-us

Warranty

What Is Covered

CERTIFICATE OF WARRANTIES:
DACOR OUTDOOR GRILLS

WITHIN THE FIFTY STATES OF THE U.S.A., THE DISTRICT OF COLUMBIA, AND CANADA*:

FULL ONE-YEAR WARRANTY

The warranty applies only to the Dacor appliance sold to the first use purchaser, starting from the date of original retail purchase or closing date for new construction, whichever period is longer. Warranty is valid on products purchased brand new from a Dacor Authorized Dealer, or other seller authorized by Dacor.

If your Dacor product fails to function within one year of the original date of purchase, due to a defect in material or workmanship, Dacor will remedy it without charge to you.

All cosmetic damage (such as scratches on stainless steel, paint/porcelain blemishes, etc.) to the product or included accessories must be reported to Dacor within 60 days of the original purchase date to qualify for warranty coverage.

Consumable parts such as filters and light bulbs are not covered and are the responsibility of the purchaser.

LIMITATIONS OF COVERAGE

Service will be provided by a Dacor designated service company during regular business hours. Please note service providers are independent entities and are not agents of Dacor.

Dealer display and model home display products with a production date greater than 5 years, products sold "As Is," and products installed for non-residential use, which include but are not limited to religious organizations, fire stations, bed and breakfast and spas carry a one year parts warranty only. All delivery, installation, labor costs and other service fees are the responsibility of the purchaser.

Warranty will be null and void on product that has altered, defaced or missing serial numbers and tags.

The owner must provide proof of purchase or closing statement for new construction upon request. All Dacor products must be accessible for service.

*Warranty is null and void if non-ETL or non-CUL approved product is transported from the U.S.

OUTSIDE THE FIFTY STATES OF THE U.S.A., THE DISTRICT OF COLUMBIA, AND CANADA:

LIMITED FIRST YEAR WARRANTY

If your Dacor product fails to function within one year of the original date of purchase due to a defect in material or workmanship, Dacor will furnish a new part, F.O.B. factory to replace the defective part.

All delivery, installation, labor costs and other service fees are the responsibility of the purchaser.

What Is Not Covered

- Slight color variations may be noticed because of differences in painted parts, kitchen lighting, product placement and other factors; this warranty does not apply to color variation.
- Service calls to educate the customer on proper use and care of the product.
- Service fees for travel to islands and remote areas, which include but are not limited to, ferries, toll roads or other travel expenses.
- Consequential or incidental damage, including but not limited to food or medicine loss, time away from work or restaurant meals.
- Failure of the product when used for commercial, business, rental or any application other than for residential consumer use.
- Failure of the product caused by improper product installation.
- Replacement of house fuses, fuse boxes or resetting of circuit breakers.
- Damage to the product caused by accident, fire, flood, power interruption, power surges or other acts of God.
- Liability or responsibility for damage to surrounding property including cabinetry, floors, ceilings and other structures or objects around the product.
- Breakage, discoloration or damage to glass, metal surfaces, plastic components, trim, paint or other cosmetic finish caused by improper usage, care, abuse or neglect.

Out of Warranty

Should you experience a service issue beyond the standard warranty period, please contact us. Dacor reviews each issue and customer concern to provide the best possible solution based on the circumstances.

THE REMEDIES PROVIDED FOR IN THE ABOVE EXPRESS WARRANTIES ARE THE SOLE AND EXCLUSIVE REMEDIES. THEREFORE, NO OTHER EXPRESS WARRANTIES ARE MADE, AND OUTSIDE THE FIFTY STATES OF THE UNITED STATES, THE DISTRICT OF COLUMBIA AND CANADA, ALL IMPLIED WARRANTIES, INCLUDING BUT NOT LIMITED TO, ANY IMPLIED WARRANTY OF MERCHANTABILITY OR FITNESS FOR A PARTICULAR USE OR PURPOSE, ARE LIMITED IN DURATION TO ONE YEAR FROM THE DATE OF ORIGINAL PURCHASE. IN NO EVENT SHALL DACOR BE LIABLE FOR INCIDENTAL EXPENSE OR CONSEQUENTIAL DAMAGES. NO WARRANTIES, EXPRESS OR IMPLIED, ARE MADE TO ANY BUYER FOR RESALE.

Some states do not allow limitations on how long an implied warranty lasts, or do not allow the exclusion or limitation of inconsequential damages, therefore the above limitations or exclusions may not apply to you. This warranty gives you specific legal rights, and you may also have other rights that vary from state to state.

fold here

NO POSTAGE
NECESSARY
IF MAILED
IN THE
UNITED STATES

BUSINESS REPLY MAIL
FIRST-CLASS MAIL PERMIT NO 1600 CITY OF INDUSTRY CA

POSTAGE WILL BE PAID BY ADDRESSEE

DACOR
ATTN WARRANTY PROCESSING DEPT
PO BOX 90070
CITY OF INDUSTRY CA 91715-9907

dacor
The Life of the Kitchen.®

Please visit www.dacor.com to activate your warranty online.

WARRANTY INFORMATION

IMPORTANT:

Your warranty will not be activated until you activate it online or return this form to Dacor. If you have purchased more than one Dacor product, please return all forms in one envelope or activate the warranty for each product online.

Please rest assured that under no conditions will Dacor sell your name or any of the information on this form for mailing list purposes. We are very grateful that you have chosen Dacor products for your home and do not consider the sale of such information to be a proper way of expressing our gratitude!

Owner's Name: _____
Last (Please Print or Type) First Middle

Street: _____

City: _____ State: _____ Zip: _____

Purchase Date: _____ Email: _____ Telephone: _____

Dealer: _____

City: _____ State: _____ Zip: _____

Your willingness to take a few seconds to fill in the section below will be sincerely appreciated. Thank you.

1. How were you **first** exposed to Dacor products? (Please check one only.)
   - ❑ A. T.V. Cooking Show
   - ❑ B. Magazine
   - ❑ C. Appliance Dealer Showroom
   - ❑ D. Kitchen Dealer Showroom
   - ❑ E. Home Show
   - ❑ F Builder
   - ❑ G. Architect/Designer
   - ❑ H. Another Dacor Owner
   - ❑ I. Model Home
   - ❑ J. Other _____

2. Where did you buy your Dacor appliances?
   - ❑ A. Appliance Dealer
   - ❑ B. Kitchen Dealer
   - ❑ C. Builder Supplier
   - ❑ D. Builder
   - ❑ E. Other _____

3. For what purpose was the product purchased?
   - ❑ A. Replacement ***only***
   - ❑ B. Part of a Remodel
   - ❑ C. New Home
   - ❑ D. Other _____

4. What is your household income?
   - ❑ A. Under $75,000
   - ❑ B. $75,000 – $100,000
   - ❑ C. $100,000 – $150,000
   - ❑ D. $150,000 – $200,000
   - ❑ E. $200,000 – $250,000
   - ❑ F. Over $250,000

5. What other brands of appliances do you have in your kitchen?
   - A. Cooktop _____
   - B. Oven _____
   - C. Dishwasher _____
   - D. Refrigerator _____

6. Would you buy or recommend another Dacor product?
   - ❑ Yes
   - ❑ No

   Comments: _____

Thank you very much for your assistance. The information you have provided will be extremely valuable in helping us plan for the future and giving you the support you deserve.

cut here

cut here

Web site: www.dacor.com
Corporate phone: (800) 793-0093