DMU-6X and DMU-VGX
Silicon IMU and Vertical Gyro

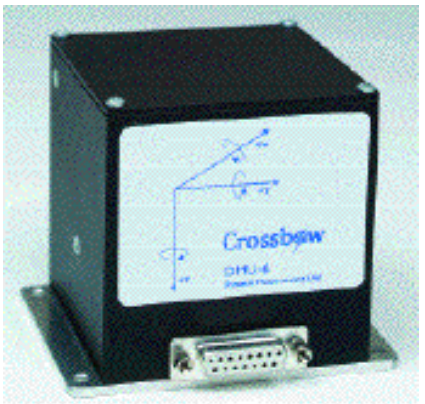

Features

X, Y, Z Acceleration
Roll, Pitch, Yaw Angular Rate
Stabilized Roll & Pitch Angle Output
Analog Signal Conditioned Output
133 Hz Digital (RS-232) Output
DSP Proccessing Power
Evaluation Software Included

Applications

Camera and Platform Stabilization
Antennae Pointing
Inertial Measurements for GPS Integration
Dynamic Positioning & Control
Automotive Testing
Flight Data Analysis

Description

The DMU is an intelligent six axis measurement system designed for accurate acceleration and angle measurement in dynamic environments. The DMU provides application-specific functionality with two product versions, the DMU-6X and DMU-VGX. The DMU-6X outputs inertial acceleration and angular rate measurements formatted for easy system integration. Example applications include GPS navigation, dynamic positioning, and automotive testing. The DMU-VGX outputs stabilized pitch and roll information in addition to the DMU-6X outputs, ideal for camera or platform stabilization. Both products allow for data to be requested via serial command or to be transferred continuously.

DMU Products	Description	Output
DMU-6X	6 degrees of freedom inertial measurement unit. Digital voltage and signal conditioned analog outputs.	XYZ Acceleration 3 Axis Angular Rate
DMU-VGX	Tilt angle (roll/pitch) is computed for measurement in dynamic environments. 133 Hz updates of RS-232 data and 400Hz updates of analog voltage output. Angular rate and acceleration outputs also included.	Roll and Pitch

Table 1. Description of DMU Products.

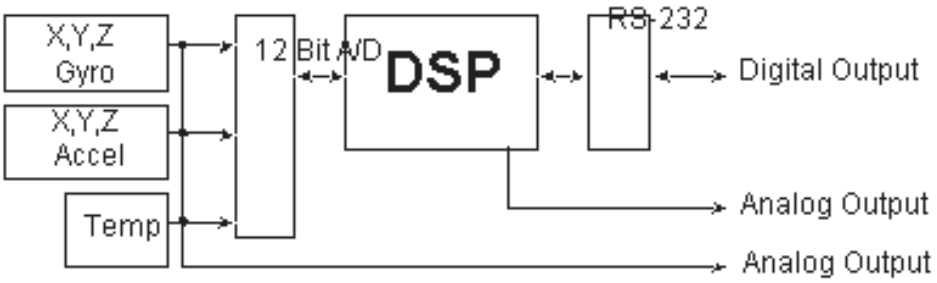

Figure 1. Block diagram of DMU

© 1998 Crossbow Technology, Inc. All rights reserved.

Crossbow Technology
41 E. Daggett Dr.
San Jose, CA 95134

http://www.xbow.com Ph: (408) 324 4830
info@xbow.com Fax: (408) 324 4840

Nintendo Exhibit 1053
IPR2024-00667 - Page 001

Specifications

Power		Operating Temperature Range	
Input Supply Voltage	+8 to 30 V DC	Operating Temperature Range	-40 to 85 °C
Input Supply Current	200 mA (max)	Storage Temperature Range	-55 to 85 °C

Packaging	
Package	Aluminum housing (3” x 3.375” x 3.250”)
Weight	475 grams

DMU-VGX Performance		
Roll, Pitch Angle: Dynamic Accuracy	1° RMS	Application Dependent
Resolution	0.1°	Typical
Linearity	< 1 % of FS	FS Roll =180°, FS Pitch =90°
Full Scale Span (analog outputs)	+/- 4.096 VDC	
Analog Data Update Rate	400 Hz	See page 5 for detail.
Digital Data Update Rate	133 Hz	See page 5 for detail.

DMU-6X Performance	Gyro	Acceleration
Available Full Scale Ranges	+/- 50 to 200 °/sec	+/- 1 to 50 G
Full Scale Span (analog outputs)	+/- 4.096 V DC	0 to 5V DC
Full Scale Span (digital output)	-32,768 to +32,767	-32,768 to +32,767
Scale Factor Calibration	< 1 %	< 1 %
Bandwidth	DC - 10 Hz	DC - 100Hz
Linearity	0.5 % of FS	0. 2% of FS
Bias Stability (Room)	+/- 1 °/sec	+/- 5mG
Bias Stability (-40 to 85)	+/- 9 °/sec	+/- 70 mG
Alignment (to enclosure)	< 1 °	< 1 °
Resolution	0.05 °/sec	5 mG (FS < 8G), 50mG (FS > 8G)

Temperature Sensor Output		Mechanical Shock and Vibration	
Range	-50 to 150 °C	Shock	1000 G (1 ms half sine wave)
Accuracy	+/- 2% of FS	Vibration	10 G RMS to 2 kHz
Linearity	+/- 1% of FS		

Principle of Operation

The DMU measures acceleration in three orthogonal axes as well as rotation rate about each of these axes. This is accomplished by three accelerometers and three angular rate sensors.

The DMU employs on board digital processing to provide application-specific outputs and to compensate for deterministic error sources within the unit. The DMU accomplishes these tasks with an analog to digital converter and a high performance Digital Signal Processor. (See Figure 1)

All six of the DMU sensor elements are micromachined devices. The three angular rate sensors consist of vibrating ceramic plates that utilize the Coriolis force to output angular rate independently of acceleration. The three MEMS accelerometers are surface micro-machined silicon devices that use differential capacitance to sense acceleration. The specifications of the DMU are shown above.

© 1998 Crossbow Technology, Inc. All rights reserved.

Nintendo Exhibit 1053
IPR2024-00667 - Page 002

DMU-6X

The DMU-6X has three output options, one analog and two digital, that allow for easy integration into measurement and control systems.

Analog Interface

The DMU features six fully signal conditioned analog outputs - three linear acceleration signals and three angular rate signals. The analog outputs can directly interface to an A/D or standard data acquisition hardware.

Digital Interface

The digital data output is standard UART at 38.4 kbaud. 8 bit data, 1 bit start, 1 bit stop, No parity. Other baud rates are avialable.

In **voltage mode**, the analog sensor signals are sampled and converted to digital data with 1mV resolution. This digital data is 12 bit, unsigned. Data can be requested via a serial command or set to continuously transfer to the host.

In **scaled sensor mode**, the analog sensor signals are sampled, converted to digital data, temperature compensated, and scaled to engineering units. An electronic data sheet for each sensor is stored in the DMU's on-board memory. The data sheet includes each sensor's bias (offset and scale factor). Data can be requested via a serial command or set to continuously transfer to the host. The digital data is 16 bit 2's compliment integers. A 16 bit timer value is also included in the packet. (See Timer section).

DMU-VGX

The DMU-VGX provides stabilized roll and pitch angles through sophisticated signal processing of the rate and acceleration sensors. Standard tilt sensors use earth's gravitational field to measure angle. Examples of these sensors include the older electrolytic fluid sensors as well as the newer accelerometer based tilt sensors such as the CXTILT02 from Crossbow. These sensors only measure tilt accurately when the object being measured is not accelerating. In dynamic environments such gravity-based tilt sensors can not distinguish between tilt and acceleration.

The DMU-VGX uses a combination of angular rate and acceleration signals to solve this problem. Tilt is calculated by integrating the angular rate sensor outputs to angle. Then the tilt response of the accelerometers corrects for error due to angular rate sensor drift. Drift corrections are applied continuously and the frequency of the updates can be set via the serial command 'T' <0-255>. In this way, corrections can be applied slowly, a T value between 70 - 255, in environments where accelerations are jerky and relatively short (e.g., marine, automotive applications) and more frequently, a T value closer to 0, in environments where accelerations are longer and smoother.

Roll and pitch angle, angular rate, and acceleration outputs are available in the DMU-VGX packet. The digital data is 16 bit 2's compliment integers. This data can be requested via a serial

Command (ASCII)	Response	Description
R	H	Reset: Resets the DMU Firmware. Default operating mode is Voltage Mode and Polled operation (Note 1).
G	Data Packet	Get Data: Requests a packet of data from the DMU. Data format depends on operating mode.
r	R	Change to Voltage Mode.
c	C	Change to Scaled Sensor Mode.
a	A	*DMU-VGX Only:* Change to DMU-VG output mode.
T <0 - 255>	None	*DMU-VGX Only: 2 byte command sequence that changes the integrator correction time constant.*
C	None	Change to continuous data transmit mode. Data packets streamed continuously. Packet rate is dependent on operating mode.
P	None	Change to polled mode. Data packets sent when a G is received by the DMU.
z <0-255>	Z	Calibrate and set zero bias for rate sensors by averaging over time. 1st byte initiates zeroing process. 2nd byte sets duration for averaging. Unit should be straight and level.

DMU serial command set [Firmware v1.2].

© 1998 Crossbow Technology, Inc. All rights reserved.

Nintendo Exhibit 1053
IPR2024-00667 - Page 003

command or set for continuous transfer.

X-View Development Software

Crossbow development software is shipped with the DMU for use with 486 or better PCs running MS Windows95. The software demonstrates the functionality of both the DMU-6X and the DMU-VGX. It is a convenient way to get started with system development and evaluate the performance of the DMU. The software is a run-time application based on National Instrument's LabView software. The software is shipped on 3.5" floppy disks. For software installation, simply double click the SETUP file on floppy disk #1.

Value	Conversion Factors
Roll & Pitch	180° / 32,768 digits
Range of X G's	(X * 1.5) / 2^{15} from binary data to G's
Range of X °/sec	(X * 1.5) / 2^{15} from binary data to °/sec
Temp	=1.375V + 22.5mV*Temp(in C)
Check Sum	with 0 to 4V / 4095 digits Step 1: Sum all packet contents but header and checksum Step 2: Divide by 256 Step 3: The remainder of this division should equal the Check Sum

Table 2. Conversion Factors.

	DMU-VG	Scaled Sensor Mode	Voltage Mode
0	Header (255)	Header (255)	Header (255)
1	Roll (MSB)	Angular Rate X (MSB)	Gyro Voltage X (MSB)
2	Roll (LSB)	Angular Rate X (LSB)	Gyro Voltage X (LSB)
3	Pitch (MSB)	Angular Rate Y (MSB)	Gyro Voltage Y (MSB)
4	Pitch (LSB)	Angular Rate Y (LSB)	Gyro Voltage Y (LSB)
5	Roll Rate (MSB)	Angular Rate Z (MSB)	Gyro Voltage Z (MSB)
6	Roll Rate (LSB)	Angular Rate Z (LSB)	Gyro Voltage Z (LSB)
7	Pitch Rate (MSB)	Acceleration X (MSB)	Accelerometer Voltage X (MSB)
8	Pitch Rate (LSB)	Acceleration X (LSB)	Accelerometer Voltage X (LSB)
9	Yaw Rate (MSB)	Acceleration Y (MSB)	Accelerometer Voltage Y (MSB)
10	Yaw Rate (LSB)	Acceleration Y (LSB)	Accelerometer Voltage Y (LSB)
11	Acceleration X (MSB)	Acceleration Z (MSB)	Accelerometer Voltage Z (MSB)
12	Acceleration X (LSB)	Acceleration Z (LSB)	Accelerometer Voltage Z (LSB)
13	Acceleration Y (MSB)	Temp Sensor Voltage (MSB)	Temp Sensor Voltage (MSB)
14	Acceleration Y (LSB)	Temp Sensor Voltage (LSB)	Temp Sensor Voltage (LSB)
15	Acceleration Z (MSB)	Time (MSB)	Time (MSB)
16	Acceleration Z (LSB)	Time (LSB)	Time (LSB)
17	Temp Sensor Voltage (MSB)	Checksum	Checksum
18	Temp Sensor Voltage (LSB)		
19	Time (MSB)		
20	Time (LSB)		
21	Checksum		

Data packet format. [v1.2]

Timing Diagrams

In some applications, using the DMU's digital output requires a precise understanding of the internal timing of the device. The processor internal to the DMU runs in a loop - collecting data from the sensors, processing the data, and reporting the data to the user. In continuous mode, the system processor activity is repeatable and accurate timing information can be derived based purely on the overall loop rate. The following table and graph describe these relationships.

A time tag is attached to the packet in the voltage, scaled sensor, and VGX output mode. The time tag is simply the value of a free running counter at the time the A/D channels are sampled. The clock counts down from 65535 to 0, and a single tick corresponds to 0.79 micrseconds. The timer rolls over every 50 milliseconds.

Nintendo Exhibit 1053
IPR2024-00667 - Page 004

Operating Mode	Conversion Time (T1)	Processing Time (T2)	Transfer Time (T3)	Total Time (Sum)	Data Rate Output
DMU-6X					
Voltage	0.8 ms	0.5 ms	4.7 ms		166 Hz
Scaled	0.8 ms	0.9 ms	4.7 ms	6.0 ms	156 Hz
DMU-VGX				6.4 ms	
Digital	0.8 ms	1.5 ms	5.2 ms		133 Hz
Analog	0.8 ms	1.5 ms	-	7.5 ms	400 Hz
				2.3 ms	

Notes:
1. Inter-channel conversion time is 0.133 milliseconds; there are a total of 6 channels which are converted on each iteration.
2. T3 assumes 38.4 Baud communications.
3. The clock signal transitions every time the 16 bit counter value rolls over. The clock signal can be used to correlate the timer stamp to an external time reference.

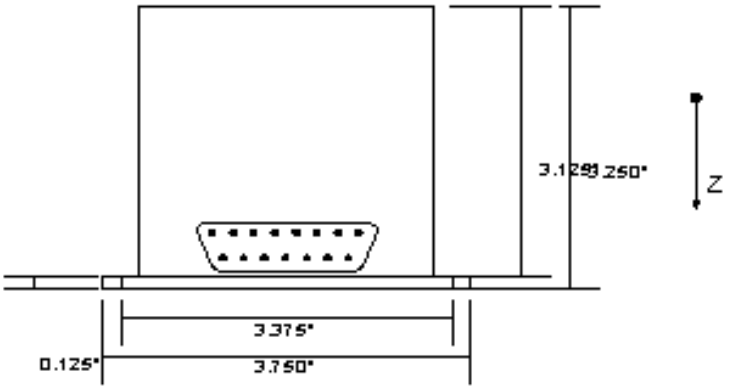

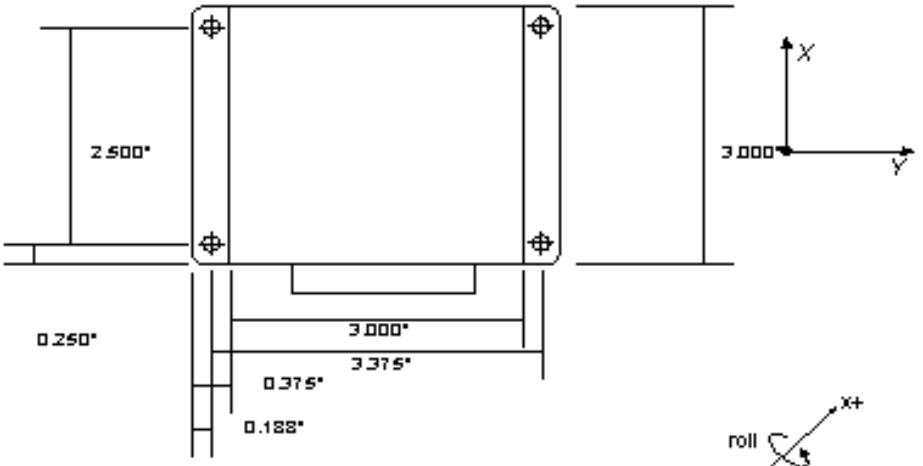

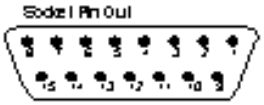

1 Transmit Data
2 Receive Data
3 Vcc
4 GND
5 X-axis Accelerometer Analog Voltage
6 Y-Axis Accelerometer Analog Voltage
7 Z-Axis Accelerometer Analog Voltage
8 Roll Rate Analog Voltage
9 Pitch Rate Analog Voltage
10 Yaw Rate Analog Voltage
11 Timing Pulse
12 Roll (VGX only)
13 Pitch (VGX only)
14 Unused
15 Unused

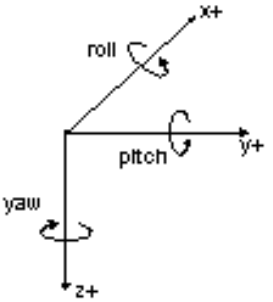

© 1998 Crossbow Technology, Inc. All rights reserved.