Corey Johanningmeier (*pro hac vice* to be filed)
Michael N. Zachary (WSBA No. 27064)
**BUNSOW DE MORY LLP**
701 El Camino Real
Redwood City, CA 94063
Telephone: (650) 351-7248
Facsimile: (415) 426-4744
cjohanningmeier@bdiplaw.com
mzachary@bdiplaw.com

Attorneys for Plaintiff
**American GNC Corp.**

**UNITED STATES DISTRICT COURT**

**WESTERN DISTRICT OF WASHINGTON**

**SEATTLE DIVISION**

| | |
|---|---|
| AMERICAN GNC CORPORATION;<br>Plaintiff,<br>v.<br>NINTENDO CO., LTD., and NINTENDO OF AMERICA, INC.;<br>Defendant. | Case No. _____<br><br>**COMPLAINT FOR PATENT INFRINGEMENT**<br><br>**JURY TRIAL DEMANDED** |



IPR2024-00668
AGNC EX2007

Plaintiff American GNC Corp. ("American GNC"), for its Complaint against Defendants Nintendo Co., Ltd. and Nintendo of America, Inc. ("Nintendo") requests a trial by jury and alleges as follows upon actual knowledge with respect to itself and its own acts and upon information and belief as to all other matters:

**NATURE OF THE ACTION**

1. This is an action for patent infringement. American GNC alleges that Nintendo infringed U.S. Patent Nos. 6,508,122 ("the '122 patent"), and 6,671,648 ("the '648 patent") (collectively, the "Asserted Patents"), copies of which are attached hereto as Exhibits A and B.

2. American GNC was and remains today an operating technology company that specialized in innovations in the fields of Guidance, Navigation, Control, and Communications, and that pioneered commercially viable inertial sensors built using Micro-Electrical-Mechanical Systems (MEMS) technology. American GNC's motion and position sensing technologies were developed initially for applications in the Aerospace and Defense industries, but the improvements in size, reliability, and efficiency enabled by American GNC's patented inventions allowed for accurate and efficient inertial sensing in a myriad of commercial applications—including transportation, guidance and navigation systems, location tracking for smartphones and other devices, and as here, motion sensing for gaming control.

3. American GNC's coremicro® Inertial Measurement Unit (IMU) products based on its patented innovations were widely acknowledged for their groundbreaking advances in technology. American GNC's patents have been cited hundreds of times, including by Nintendo, and have been successfully licensed to many companies. Beginning in early 2017, American GNC informed Nintendo of the Asserted Patents and Nintendo's infringement of them, seeking to license American GNC's technology to Nintendo. Nintendo repeatedly declined to license



IPR2024-00668
AGNC EX2007

the inventions. But Nintendo willfully continued to take and use the patented technology without permission, continuing for years through the remaining life of the Asserted Patents.

4. American GNC alleges that Nintendo directly and indirectly infringed the Asserted Patents by making, importing, using, offering, and/or selling video game consoles and controllers that incorporate infringing inertial measurement units—including in particular the Nintendo Switch and Switch Lite consoles, and associated controllers including Joy-Con and Pro controllers. American GNC further alleges that Nintendo induced and contributed to the infringement of others. American GNC seeks damages and other relief for Nintendo's past infringement of the Asserted Patents.

## THE PARTIES

5. American GNC is a corporation organized under the laws of California with its principal place of business at 888 Easy Street, Simi Valley, California 93065.

6. American GNC was a pioneer in development of Micro-Electrical-Mechanical Systems (MEMS) for sensing and measurement of acceleration, angular rate, and position. For example, American GNC made the world's first MEMS rate-integrating gyroscope in 1999. The company was among the very first to patent MEMS Inertial Measurement Unit (IMU) technology, including in the Asserted Patents.

7. American GNC was granted and manages a portfolio of 79 patents. That portfolio includes the foundational Asserted Patents—that are based on and claim the inventions of company founder Dr. Ching-Fang Lin and engineer Hiram McCall.



IPR2024-00668
AGNC EX2007

8. On information and belief, Defendant Nintendo Co., Ltd. is Japanese company with a regular place of business at 1101 Kamitoba hokotate-cho, Minami-ku, Kyoto 601-8501 Japan.

9. Upon information and belief, Defendant Nintendo of America, Inc. is a Washington corporation, with its principal place of business at 4600 150th Avenue NE, Redmond, Washington 98052 and has a registered agent for service of process at CT Corporation System, 711 Capitol Way S, Suite 204, Olympia, Washington 98501.

10. On information and belief, Defendants developed aspects of, imported, used, induced and contributed to others' use, offered, and sold the Accused Products in the United States, the State of Washington, and in the Western District of Washington, and did so using technology that infringes the Asserted Patents.

11. By registering to conduct business in Washington and by having facilities where it regularly conducts business in this district, Defendants have a permanent and continuous presence in Washington and a regular and established place of business in the Western District of Washington.

## JURISDICTION

12. This is an action arising under the patent laws of the United States, 35 U.S.C. § 271, *et seq*. Accordingly, this Court has subject matter jurisdiction pursuant to 28 U.S.C. §§ 1331 and 1338(a).

13. This Court has general and specific personal jurisdiction over Nintendo due, *inter alia*, to its continuous presence in, and systematic contact with, this judicial district and its registration in Washington and domicile in this judicial district. Nintendo is subject to this Court's jurisdiction pursuant to due process at least as a result of Nintendo's substantial business in Washington and this judicial district, including at least part of its past infringing activities, regularly doing or



IPR2024-00668
AGNC EX2007

soliciting business at and from its local facilities, and engaging in persistent conduct and/or deriving substantial revenue from goods and services provided in the State of Washington, including in the Western District of Washington. Nintendo directly and/or through subsidiaries or intermediaries (including distributors, retailers, franchisees and others), has committed acts of infringement in this judicial district by, among other things, making, using, offering for sale, and/or selling systems that infringe the Asserted Patents.

## VENUE

14. Venue is proper in this judicial district pursuant to 28 U.S.C. §§1391(b), (c), (d) and 1400(b) because Nintendo has a permanent and continuous presence in, has committed acts of infringement in, and maintains regular and established places of business in this district. In addition, a substantial part of the acts or omissions giving rise to American GNC's claims occurred in this district. Intradistrict assignment in the Seattle Division of this judicial district is appropriate under LCR 3(e) because a substantial part of the events that give rise to the claim occurred in King County.

15. Venue is also proper as to a foreign defendant in any district. 28 U.S.C. § 1391(c)(3); *In re HTC Corp.*, 889 F.3d 1349 (Fed. Cir. 2018). Defendant Nintendo Co., Ltd. is a foreign corporation organized under the laws of Japan, with a principal place of business in Japan.

## FACTUAL ALLEGATIONS

### A. American GNC's Invention of a MEMS Inertial Measurement Unit

16. American GNC was founded in California by Dr. Ching-Fang Lin in 1986. Dr. Lin received his doctorate in Computer, Information, and Control Engineering from the University of Michigan in Ann Arbor. Dr. Lin was a prolific inventor—he was responsible for over a hundred patent applications at American

GNC, and is co-inventor of the Asserted Patents. He authored over four hundred technical publications and was responsible for over a thousand government contract reports. Dr. Lin led the effort to introduce over thirty guidance, navigation, control, and communications products. He was also the recipient of numerous awards over his career, including from the Small Business Association for his efforts as an Entrepreneur, and from NASA and others for his contributions to Science and Technology.

17. American GNC (also known as "AGNC") focused on inventing and applying advanced and innovative technologies to contemporary problems within the fields of guidance, navigation, control and communications, inertial sensors, health monitoring, intelligent processing, and autonomous robotics.

18. Since its establishment in 1986, American GNC has been actively involved in pioneering efforts related to inertial sensors, interruption-free positioning, and INS/GNSS fusion navigation technologies that American GNC has invented, which are disclosed in its extensive patent portfolio. American GNC made the world's first MEMS rate-integrating gyroscope in 1999, setting the stage for development of its coremicro® IMU product series.

American GNC coremicro® IMU product (circa 2000):

IPR2024-00668
AGNC EX2007

*See also* https://americangnc.com/products/imu.htm ("This product was developed from the technologies of the following awarded US Patents: … 6,508,122; … 6,671,648; …").

19. At the time American GNC began its work on MEMS inertial sensors, there was an acknowledged need, both in the Defense and Aerospace industries, as well as in commercial product applications, for such inertial sensing devices that would work reliably and accurately. These applications required ever-smaller device sizes—for example for use in portable systems in the field. MEMS devices were believed to be a promising technology for achieving these scale and reliability goals, but no one had yet succeeded in designing such a system that was technically and commercially viable. Major research institutions and corporations—such as Jet Propulsion Laboratories, Draper Laboratory, Hughes, Boeing, Lockheed Martin, Honeywell, and others—were working on aspects of the problem.

20. At American GNC, inventors Dr. Lin and Hiram McCall were working to resolve these problems. In the late 1990's, American GNC was developing technology focused on its defense and government contracts. Dr. Lin had talked to many customers to assess what demands existed in the marketplace so that he gained an understanding of the specifications that instruments needed to meet. These customers were mostly government, but American GNC also received commercial requests. Military defense customers wanted handheld instruments for orientation and positioning. All of these customers wanted a rugged device with better performance and smaller size. They also wanted reduced cost.

21. Inventor Hiram McCall started working at American GNC in February of 1999. He holds a Bachelor's Degree in Electrical Engineering and a Master's Degree in Electrical Engineering focused on control systems. His career focused on circuit design, electronics, and embedded control. Mr. McCall's work



IPR2024-00668
AGNC EX2007

at American GNC focused on the circuitry of the instruments, including developing new circuitry that would apply advanced techniques and allow the instruments to obtain a reliable, clean signal off of the silicon sensor for use outside of the instrument. This work was directed to, and was crucial to, solving the problem that MEMS sensing elements had previously yielded poor performance due to circuit limitations (*e.g.*, the angular rate output signal was not stable and would drift beyond what is tolerable for most applications). American GNC's work with this control and signal processing circuitry was on the cutting edge of technology given the state of the art in sensor circuitry at that time in 1999.

22. The inventive work of Dr. Lin and Mr. McCall enabled American GNC to fabricate prototype inertial sensors that functioned reliably and to demonstrate, for the first time, the ability to solve the known problems in the art. American GNC then diligently worked toward patenting its innovative techniques, and in developing and commercializing products based on the inventions. American GNC filed its first patent applications for its gyroscope and IMU inventions beginning in the late summer and early fall of 1999.

23. After the proof of concept via prototypes were completed and the patents were filed, American GNC demonstrated its inventions at customer sites. Over the next few years, these efforts generated significant interest in, and praise for, the inventive technology—from government and defense organizations, as well as from commercial and academic sources. American GNC's coremicro® product line expanded to include a variety of guidance and navigation devices:



IPR2024-00668
AGNC EX2007

24. Because of its early technological success—including in applying advanced control and signal processing circuitry to the MEMS sensor signals—American GNC was among the first companies to patent MEMS Inertial Measurement Unit technology. Commercialization of this technology, first demonstrated to be commercially and technically viable by American GNC, has continued—reaching more and more applications as costs and component sizes further decrease. MEMS Inertial Measurement Unit technology is now commonly found in consumer electronics such as cameras, guidance and navigation devices, drones, smartphones and tablets, as well as in video game consoles and controllers, where it enables motion sensing capability critical to customer experience of those systems and of many of Nintendo's most popular game titles.

25. Today, American GNC remains an operating technology company, for example developing technical solutions under contracts from the United States government. Since the passing of Dr. Lin in 2010, the company has also focused on various other technical fields, such as Systems Health Monitoring, Smart Sensors, Computer Vision, and Machine Learning. More information about American GNC and its products can be found at its website, www.americangnc.com. A listing of American GNC's past and present government technology contracts, from agencies such as the Department of



IPR2024-00668
AGNC EX2007

Defense, NASA, and the National Science Foundation, is publicly available at https://www.sbir.gov/sbc/american-gnc-corporation.

**B. American GNC's Patents**

26. American GNC owns a portfolio of patents claiming the inventions of Dr. Lin and Hiram McCall relating to MEMS inertial sensors (e.g., gyroscopes, accelerometers) and circuitry implementing control systems thereof—such as would be and are incorporated into a MEMS Inertial Management Unit. As described above, the inventions claimed in the patents have broad application in a variety of commercial products.

27. The patents have been successfully licensed to many companies. They are also widely cited, including as prior art in hundreds of other later-filed patent applications and patents. For example, the Asserted Patents alone have been cited in patent applications filed by STMicroelectronics, Analog Devices, TDK/Invensense, Epson, Honeywell, Raytheon, Motorola, Draper Labs, and Boeing. For example, more than fifteen years ago Nintendo cited to American GNC patent 6,415,223 in many of its own patents and patent applications related to motion sensing. *See, e.g.*, https://patents.google.com/patent/US6415223B1/en#citedBy.

28. United States Patent Nos. 6,508,122 and 6,671,648 are the Asserted Patents here.

29. United States Patent No. 6,508,122, entitled "Microelectromechanical System for Measuring Angular Rate," was filed on Sept. 15, 2000 and was duly and lawfully issued by the United States Patent and Trademark Office on January 21, 2003. American GNC is the owner of all right, title, and interest in the '122 Patent. A true and correct copy of the '122 Patent is attached hereto as Exhibit A.

30. The '122 Patent describes and claims a "microelectromechanical system (MEMS) for measuring angular rate of a carrier" that includes: "an angular



IPR2024-00668
AGNC EX2007

rate sensor unit, microelectronic circuitry, and signal processing to obtain highly accurate, sensitive, stable angular rate measurements of the carrier under dynamic environments." '122 Patent at Abstract, 1:14-21, 2:7-14. The systems disclosed and claimed in the '122 patent provide significant advantages, including high performance and low cost and power dissipation, as well as improved reliability, as compared to prior solutions for measuring angular rate. *See, e.g.*, *id.* at 2:31-42 ("Dramatic Improvement in Reliability (microelectromechanical systems—MEMS").

31. An example configuration of the invented MEMS sensor device, as shown in Figure 2 of the '122 Patent below, contains proof masses (numbered 101), oscillated under control of stators (105), for sensing Coriolis force. *See, e.g.*, *id.* at 5:47-6:3. The oscillating MEMS sensor in this embodiment is capable of measuring changed capacitive signals produced when an angular rate is applied on the depicted input axis. *Id.* Multiple instances of this or similar structures in a system can provide three-axis measurement:

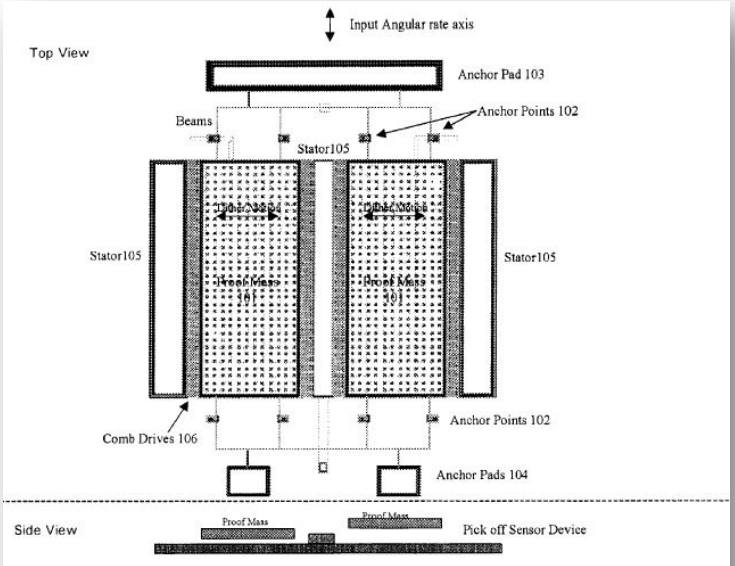


Figure 2

’122 patent at Figure 2, 4:1-2. Illustrative independent claim 1 of the ’122 Patent contains elements of an “angular rate sensor unit” as in the above example, along with “central circuitry” to interface with the signals to and from that unit, and a “digital signal processing” component for processing and feeding back signals to the sensor unit. *See, e.g.*, *id.* at 9:39-54 (claim 1), Figure 1:

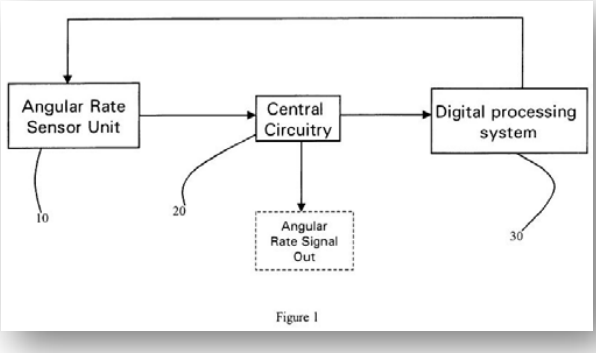


32. The inventions of the ’122 Patent presented an important advance from existing conventional angular rate sensors in Inertial Measurement Unit systems at the time, which were not made using MEMS technology and suffered from prohibitive cost, size, and power requirements. *See* ’122 Patent at 1:33-36. And the inventions of the ’122 patent also presented an important advance from existing MEMS angular rate sensors, which were rudimentary and lacked the “high accuracy, keen sensitivity, wide dynamic range, and high stability” of the inventive solution. *Id.* at 1:57-2:4. The challenges of designing reliable active angular rate sensors described in the patent were addressed by the configurations of claimed elements. *See, e.g.*, *id.* at 7:21-42. In particular, the combination of structural elements and circuit elements—for control and for receiving and processing signals—enabled the necessary sensitivity to make the inventive system function reliably and solved the technical problems many were attempting to address. *See, e.g.*, *id.* at 5:21-47.



Bunsow De Mory LLP
701 El Camino Real, Redwood City CA
1 650 351 7248

33. The '122 Patent describes and claims groundbreaking advances in the field of MEMS inertial sensors. By solving these problems, Dr. Lin, Hiram McCall, and American GNC enabled Inertial Measurement Units based on MEMS technology to become commercially and technically viable. The inventions of the '122 patent allowed continued development and commercialization—appearing in American GNC's own coremicro® IMU products and in the products of others—until today small and inexpensive IMU devices are ubiquitous. Today IMUs using American GNC's inventions are in nearly everyone's vehicle or personal navigation systems, in their smartphones and tablets, and in their Nintendo video game consoles and controllers.

34. United States Patent No. 6,671,648, entitled "Micro Inertial Measurement Unit," was filed on Oct. 22, 2001 and was duly and lawfully issued by the United States Patent and Trademark Office on December 30, 2003. American GNC is the owner of all right, title, and interest in the '648 Patent. A true and correct copy of the '648 Patent is attached hereto as Exhibit B.

35. The '648 Patent describes and claims a "micro inertial measurement unit, which is adapted to apply to output signals proportional to rotation and translational motion of a carrier" that includes: "angular rate sensors and acceleration sensors" made with MEMS technology. '648 Patent at Abstract, 2:54-3:5. The systems disclosed and claimed in the '648 patent provide significant advantages, including dramatically shrinking "the size of mechanical and electronic hardware and power consumption," while "obtain[ing] highly accurate motion measurements," as compared to prior IMU solutions. *See, e.g.*, *id.* at Abstract, 2:10-14 ("MEMS (MicroElectronicMechanicalSystem) inertial sensors offer tremendous cost, size, and reliability improvements for guidance, navigation, and control systems, compared with conventional inertial sensors"). Prior to the inventions disclosed in the '648 Patent, existing MEMS angular rate sensors and



IPR2024-00668
AGNC EX2007

MEMS accelerometers had not been successfully integrated into an Inertial Measurement Unit with sufficiently "high performance, small size, and low power consumption. *See, e.g.*, *id.* at 2:46-50.

36. An example configuration of the invented MEMS Inertial Measurement Unit sensor device, as shown in Figure 19 of the '648 Patent below, contains X, Y, and Z axis angular rate detecting units (numbered 21, 41, 71), X, Y, and Z axis accelerometers (22, 42, 72). *See, e.g.*, *id.* at 17:64-18:6, 21:63-22:10. The IMU also contains a circuit (*e.g.*, "ASIC chip 92") connected to the sensors for providing angular and velocity increment signals. *Id.* at 21:63-22:10, Figure 19:

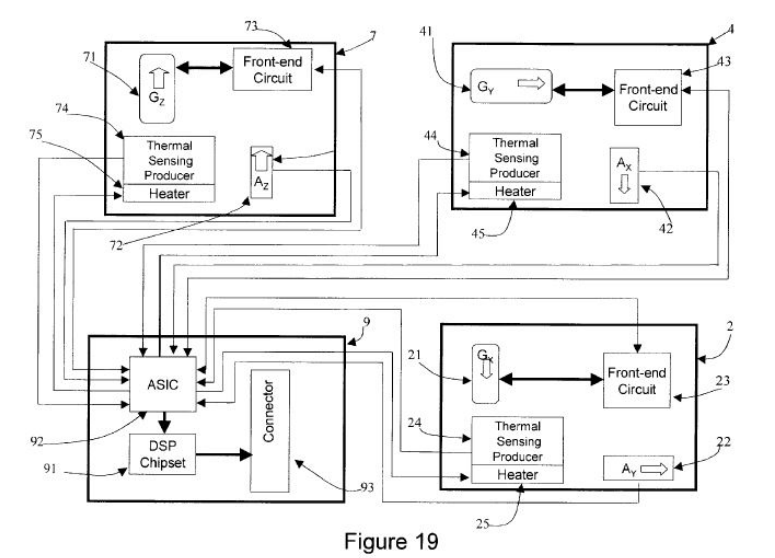

Figure 19

Illustrative independent claim 1 of the '648 Patent contains elements of X, Y, and Z axis angular rate detecting units and accelerometers as in the above example, along with "angular increment and velocity increment" circuitry to interface with the signals to and from those sensors, and to convert signals to digital angular increments and velocity increments. *See, e.g.*, *id.* at 23:43-24:21 (claim 1).



IPR2024-00668
AGNC EX2007

37. The ’648 Patent describes and claims groundbreaking advances in the field of MEMS Inertial Measurement Units. By solving these problems, Dr. Lin, Hiram McCall, and American GNC enabled Inertial Measurement Units based on MEMS technology to become commercially and technically viable. The inventions of the ’648 patent allowed continued development and commercialization—appearing in American GNC’s own coremicro® IMU products and in the products of others—until today small and inexpensive IMU devices are ubiquitous. Today IMUs using American GNC’s inventions are in nearly everyone’s vehicle or personal navigation systems, in their smartphones and tablets, and in their Nintendo video game consoles and controllers.

38. In summary, the claimed inventions of the Asserted Patents provide significant benefits to Nintendo. Each of these benefits discussed herein would have been, and was, obvious to Nintendo personnel when they first learned of and reviewed American GNC’s patents. Each of the benefits discussed herein would have been, and was, obvious to Nintendo personnel when they declined to license the patented technology. And each benefit was obvious to Nintendo when it built, used, sold, and advertised the benefits of infringing systems in Nintendo’s own products. Yet Nintendo built, imported, used, sold, and benefited from these systems without permission from, or any compensation to, American GNC for its valuable inventions.

**C. Nintendo’s Knowledge of the Patented Technology**

39. Nintendo has known of the American GNC patents, including the Asserted Patents and the inventions therein, since at least April 26, 2017. At that time, counsel for American GNC contacted Nintendo’s Director of Intellectual Property in Redmond Washington via letter. In that letter and in claim charts attached to it, Nintendo received information about American GNC, its history, and its patent portfolio. American GNC specifically identified, *e.g.*, the Asserted



IPR2024-00668
AGNC EX2007

Patents, alleged infringement by Nintendo's products including the Switch, and explained that infringement via highly detailed claim charts. These charts included element-by-element demonstration of evidence of infringement by the Switch console of at least claim 1 of the '122 Patent and claims 1 and 4 of the '648 patent.

40. Subsequently, counsel for American GNC attended an in-person meeting on October 20, 2017 with Nintendo representatives to discuss a potential license to American GNC patents. This meeting was accompanied by a presentation that gave further information about American GNC, its patents—including the Asserted Patents—relevant to Nintendo, and its accusations of infringement by Nintendo's products including the Switch.

41. After the in-person meeting with Nintendo, American GNC provided a follow-up letter to Nintendo on December 20, 2017. That letter supplemented the information previously provided concerning Nintendo's infringement of the Asserted Patent, including more detailed discussion, highlighting of previously presented evidence, and additional evidence concerning Nintendo's infringement.

42. In summary, through detailed communications from American GNC, Nintendo was aware of the Asserted Patents and of Nintendo's infringement thereof, including as alleged herein. But despite this knowledge of infringement, Nintendo chose not to license American GNC's technology, and instead continued to infringe through the remaining term of the Asserted Patents.

43. Nintendo has also demonstrated its awareness of American GNC's patent portfolio and its relevance to Nintendo's products through its own subsequent patent prosecution efforts. Many of Nintendo's patent applications and issued patents cite to American GNC patents reflecting prior American GNC inventions.

44. Nintendo had specific knowledge of the American GNC patents, including the Asserted Patents, and knew of the application and usefulness of



IPR2024-00668
AGNC EX2007

American GNC's inventions to Nintendo's products. Nintendo also knew or was willfully blind to the knowledge that its products infringed American GNC's patents, including the Asserted Patents. Nintendo also knew that American GNC sought to license this technology to Nintendo. Yet despite this knowledge, Nintendo declined to take any license, and willfully continued its infringing use of American GNC's inventions, as further described below.

**D. Nintendo's Willful Use of the Patented Technology**

45. Beginning at least as early as March 3, 2017 with the introduction of the Switch console and its Joy-Con and Pro controllers to the United States, and with knowledge of American GNC's inventions and of Nintendo's infringement thereof, Nintendo willfully infringed the Asserted Patents. Nintendo's willful infringement continued and was only ended, as a legal matter, by the expiration of the terms of the Asserted Patents.

46. The Nintendo Switch was first sold in the United States on March 3, 2017, and has become one of Nintendo's most successful products of all time. Worldwide, Nintendo has sold more than 122 million Switch consoles, and nearly one billion games for the platform:

IPR2024-00668
AGNC EX2007

47. The Nintendo Switch console was introduced at, and has long sold for, a price of $299.99. https://www.nintendo.com/store/products/nintendo-switch-110477-3/. The motion-sensing console comes with two detachable, motion-sensing Joy-Con controllers. Pairs of additional or replacement Joy-Con controllers can be purchased. https://www.nintendo.com/store/products/joy-con-set-l-r-gray/. And Nintendo also sells a standalone motion-sensing Pro Controller. https://www.nintendo.com/store/products/pro-controller/:

48. In September of 2019, Nintendo also introduced the motion-sensing Switch Lite console, for which the gaming controls are integral with the console. https://www.nintendo.com/store/products/nintendo-switch-lite-blue/:

49. The motion-sensing capabilities of the Switch console were enabled by three MEMS Inertial Measurement Units, supplied by ST Microelectronics, one



IPR2024-00668
AGNC EX2007

on the main circuit board of the console, and one on each main circuit board in each Joy Con controller. For example, a 2017 tear-down report identified the STMicroelectronics "iNEMO" 6-axis Inertial Measurement Units on these boards—specifically the LSM6DS3H component (highlighted light blue below):

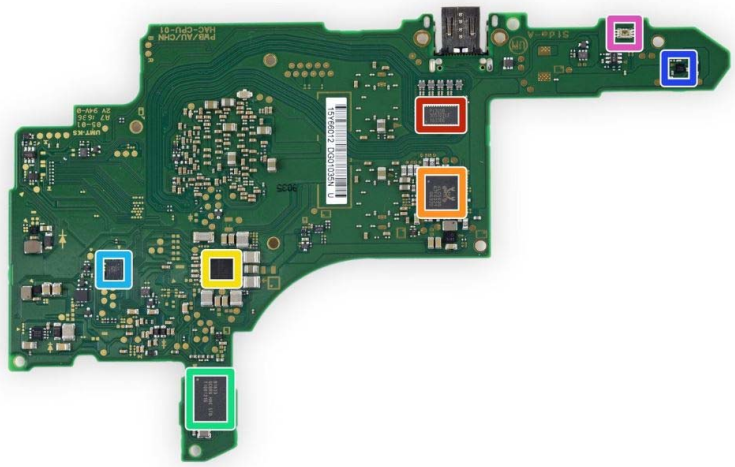

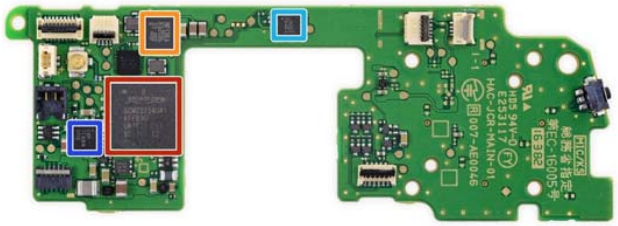

*See* https://www.ifixit.com/Teardown/Nintendo+Switch+Teardown/78263. The Switch Lite also had a STMicroelectronics IMU (part number LSM6DS3TR) when taken apart shortly after its release. *See, e.g.*, https://www.ifixit.com/Teardown/Nintendo+Switch+Lite+Teardown/126223. As did a circa-2017 Pro Controller (LSM6DS3H chip marked SH 708 in lower left of image below):



IPR2024-00668
AGNC EX2007

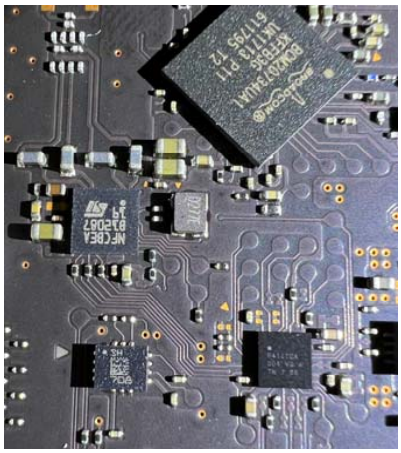

50. The STMicroelectronics LSM6DS3H and LSM6DS3TR Inertial Measurement Unit products are "a system-in-package featuring a 3D digital accelerometer and a 3D digital gyroscope." *See, e.g.*, LSM6DS3TR-C Datasheet at 1, *available at* https://www.st.com/en/mems-and-sensors/lsm6ds3tr-c.html#documentation; *see also id.* at 15 ("a high-performance 3-axis digital accelerometer and 3-axis digital gyroscope"). They can measure both acceleration and "angular rate" in each of X, Y, and Z directions. *See, e.g.*, *id.* at 18, Fig. 1: *See also* LSM6DS3H Datasheet at 17, Fig 1:

Figure 1. Pin connections

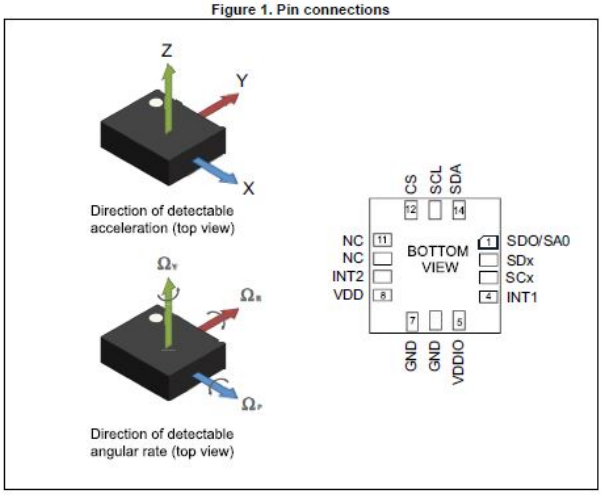


51. Inside the LSM6DS3 devices is a MEMS gyroscope structure for measuring angular rate. *See, e.g.*, STMicroelectronics, Technical Article TA0343,

"Everything about STMicroelectronics' 3-axis digital MEMS gyroscopes," at Figure 2:

Figure 2. MEMS structure die of 3-axis digital gyroscopes

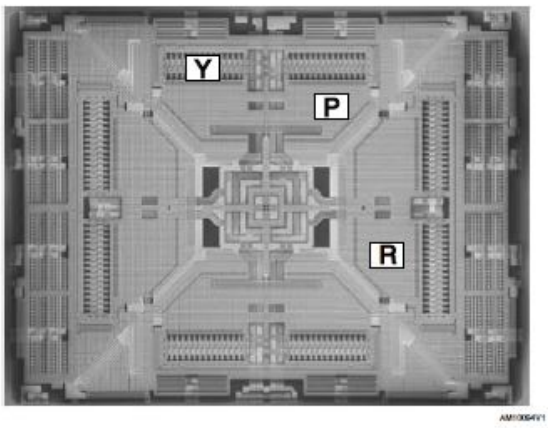


52. The devices also contain control and digital signal processing circuitry. *See, e.g.*, *id.* at 6 ("Figure 3. ASIC die of 3-axis digital gyroscopes"). In a section on "Gyroscope-enabled gaming," STMicroelectronics' technical documentation explains that the devices can also be used to convert the angular rate signals into digital angular velocity. *See id.* at 34 ("the 3-axis gyroscope can continuously give the angular velocity measurement around 3 axes").

53. The MEMS structure and control electronics of the IMU devices used in the Accused Products are also described in documentation, patents and patent applications, and technical publications of STMicroelectronics. For example, STMicroelectronics' U.S. Pat. App. No. 13/558,266, Fig. 5 depicts the control circuitry for a STMicroelectronics MEMS gyroscope:



IPR2024-00668
AGNC EX2007

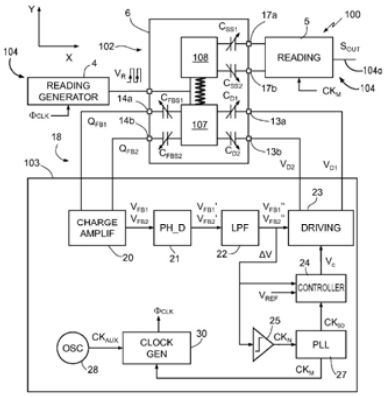


Fig.5

54. As an additional example, L. Prandi, *et al.*, "A Low-Power 3-Axis Digital-Output MEMS Gyroscope with Single Drive and Multiplexed Angular Rate Readout," IEEE International Solid-State Circuits Conference, pp.104-106, Feb. 2011, at Figure 6.1.2 depicts the MEMS sensor as well as control circuitry and digital signal processing circuity used in the LSM6DS3 devices:

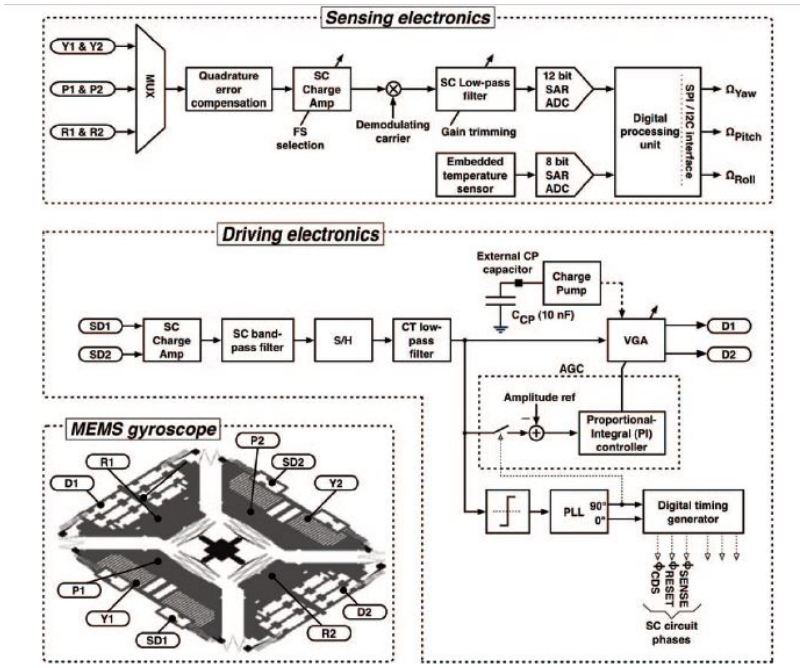


Figure 6.1.2: System architecture block diagram.

55. Another block diagram of a portion of the analog-to-digital conversion (ADC) and digital signal processing logic of the LSM6DS3 IMU devices can be seen in STMicroelectronics, Datasheet, LSM6DS3 iNEMO inertial module: always-on 3D accelerometer and 3D gyroscope, at Figure 6:

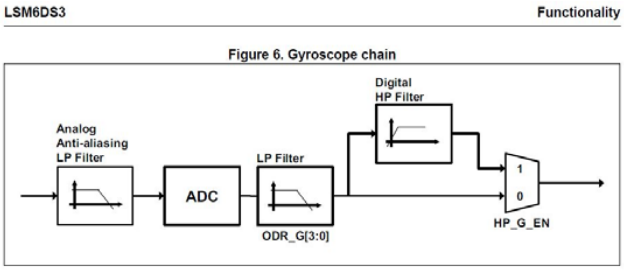


56. The LSM6DS3 family Inertial Measurement Unit devices—as integrated in, as configured by, and as operated by firmware running on processors in Nintendo's Accused Products—infringe the Asserted Patents, as further detailed below. The datasheets and documents of STMicroelectronics cited herein to demonstrate infringement are or were publicly available, and available to Nintendo for understanding the scope of its infringement. In addition, Nintendo had access to additional technical information about the IMU devices it was using from STMicroelectronics, which it obtained from STMicroelectronics in developing the Accused Products. On information and belief, that additional technical information also further demonstrated to Nintendo that Nintendo's Accused Products infringed the Asserted Patents.

57. The "Accused Products" include the Nintendo Switch gaming console, as well as the Nintendo Joy-Con controllers, whether included with the Switch Console or sold separately as accessories. The Accused Products also include the Switch Lite gaming console, and include the Nintendo Pro controller, as well as any other motion-sensing controllers sold or licensed by Nintendo for use with the Switch during the term of the Asserted Patents.



IPR2024-00668
AGNC EX2007

58. On information and belief, Nintendo used STMicroelectronics inertial sensors, like those used in its Switch products, in other consoles and controllers it sold or licensed during the term of the Asserted Patents. Those products are also Accused Products here.

59. Nintendo's willful infringement of American GNC's patents has enabled it to provide motion-sensing control functionality in its Switch portable consoles and controllers. That functionality was and is important to the marketing and success of Nintendo's hardware products. In addition, some of Nintendo's all-time best selling game titles heavily featured or relied on motion controls for their gameplay. For example, Flagship Nintendo games such Mario Kart 8 Deluxe (with over 52 million copies sold), Legend of Zelda: Breath of the Wild (over 29 million copies sold), Super Mario Odyssey (over 25 million copies), and Super Mario Party (over 18 million copies) each feature motion controls. And motion controls are essential to the gameplay of Nintendo's sports and party games such as Ring Fit Adventure (over 15 million copies), and 1-2-Switch (over 3 million copies). *See, e.g.*, https://www.nintendo.co.jp/ir/en/finance/software/index.html.

**FIRST COUNT**

**(Infringement of U.S. Patent No. 6,508,122)**

60. American GNC incorporates by reference the allegations set forth in the above Paragraphs of this Complaint as though fully set forth herein.

61. Nintendo, through its own acts and those of its subsidiaries and intermediaries, made, imported, used, sold, and/or offered to sell in the United States, systems and methods that directly infringed the '122 Patent, including the above identified Switch and Switch Lite video game consoles, and Joy-Con controller and Pro Controllers, as well as other licensed controllers. Nintendo's Accused Products infringed at least claim 1 of the '122 Patent, literally and/or under the doctrine of equivalents.



IPR2024-00668
AGNC EX2007

62. In addition, licensed component manufacturers of Nintendo and customers of Nintendo have directly infringed one or more claims of the '122 Patent. Licensed component manufacturers of Nintendo have made, imported, used, offered for sale and/or sold in the United States systems that infringed one or more claims of the '122 Patent, including at least claim 1. Nintendo's customers have used Nintendo's Accused Products, the operation of which necessarily and by design infringed one or more claims of the '122 Patent, including at least claim 1.

63. The Accused Products infringe at least claim 1 of the '122 Patent. Each Accused Product includes at least one "microelectromechanical system (MEMS) for measuring angular rate of a carrier." For example, as described above each accused Switch console and controller includes an IMU unit from the STMicroelectronics LSM6DS3 family, which include MEMS gyroscope structures that measure, *inter alia*, angular rate of motion of the carrier (*e.g.*, the portable console or controller). *See, e.g.*, https://www.techinsights.com/blog/nintendo-switch-teardown ("Posted: March 3, 2017, Updated: April 24, 2017"):

> On this main PCB we found … a STMicroelectronics SH641 6-axis accelerometer and gyroscope ultra-low power MEMS inertial sensor
> …
> the left and right controllers share a few parts in common. These include … a STMicroelectronics SH627 6-axis accelerometer and gyroscope ultra-low power MEMS inertial sensor, part of the LSM6DS3 family, a system-in-package featuring a 3D digital accelerometer and a 3D gyroscope.

*See also* LSM6DS3 Datasheet, DM00133076.pdf at 26 ("An angular rate gyroscope is device that produces a positive-going digital output for counterclockwise rotation around the axis considered"), Figure 1 (detail):



IPR2024-00668
AGNC EX2007

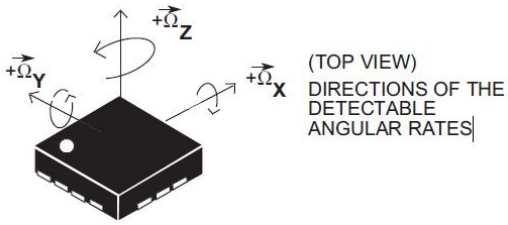


64. Each Accused Product includes an "angular rate sensor unit receiving dither driver signals, capacitive pickoff excitation signals and a displacement restoring signal and outputting angle rate signals in response to motion of said carrier and dither motion signals." For example, the included MEMS angular rate sensors use a driving structure that, using a single driving frequency signal, oscillates a movable proof mass. *See, e.g.*, STMicroelectronics, Technical Article TA0343, "Everything about STMicroelectronics' 3-axis digital MEMS gyroscopes," at Figure 4 ("Figure 4. Demonstration of single driving mass"), 1 ("single driving frequency"), 7 ("The driving mass shown in Figure 4 consists of 4 parts M1, M2, M3 and M4. They move inward and outward simultaneously at a certain frequency in the horizontal plane"). The STMicroelectronics gyroscope products within the Accused Products have proof mass(es) driven (*e.g.*, by dither driver signals) to resonate by driving terminals, while also providing amplitude control (*e.g.*, control of the displacement, or magnitude/amplitude) that is used to maintain momentum.

65. These functionalities are also evident in STMicroelectronics' public patents, patent applications, and other technical publications. *See, e.g.*, STMicroelectronics' U.S. Pat. App. No. 13/558,266 at [0038] – [0039] ("The driving device (103) that controls the microelectromechanical oscillating loop (18) further comprises a Phase Locked Loop circuit (27) for driving the mass (107) at a single, locked frequency"), Figure 2:



IPR2024-00668
AGNC EX2007

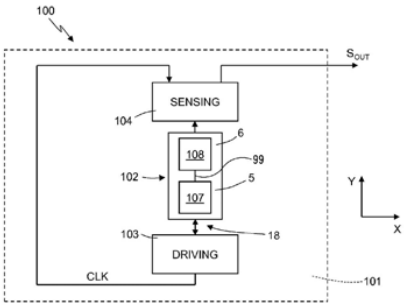


Fig.2

66. As an additional example, the included MEMS angular rate sensors use capacitive sensing of Coriolis forces upon movement of the carrier, as in the preferred embodiment of the '122 Patent. Relative to claim 1, this accused system includes capacitive pickoff excitation signals input to the capacitive sensor and angle rate signals as output—based on the detected motion of the carrier. *See, e.g.*, Technical Article TA0343 at 7:

> Whenever the Coriolis effect is detected, the continuous movement of the driving mass will cause a capacitance change ΔC which is picked up by the sensing structure and then ΔC is converted to a voltage signal by the internal circuitry [1]. The voltage signal, which is proportional to the applied angular rate, is then converted to 16-bit digital format and stored in the internal data registers.

*See also* STMicroelectronics' U.S. Pat. App. No. 13/558,266, [0037] ("sensing mass 108 is coupled to the signal sensing terminals 17 a, 17 b through signal sensing differential capacitances CSS1, CSS2"), [0044], Fig. 5 (showing output angle rate signals 17 a and 17 b).

67. As an additional example, the included MEMS angular rate sensors output dither motion signals. *See, e.g.*, *id.* at [0046] ("receives differential charge packets $Q_{FB1}$, $Q_{FB2}$ from the feedback sensing terminals 14 a, 14 b of the microstructure 102 and converts them into feedback voltages $V_{FB1}$, $V_{FB2}$, which indicate the position x of the driving mass 107"), Fig. 5:

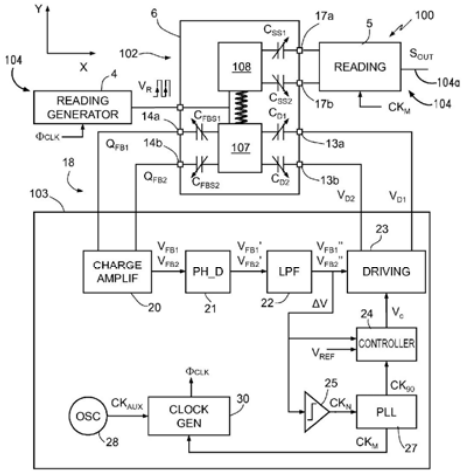


Fig.5

68. As an additional example, the included MEMS angular rate sensors receive a displacement restoring signal. For example, on information and belief, STMicroelectronics gyroscopes also utilize architectures similar to that described in its U.S. Pat. No. 7,275,433, which include receiving a displacement restoring signal. *See, e.g.*, STMicroelectronics' U.S. Pat. No. 7,275,433 at 2:1-6 ("a displacement-detecting means for detecting a displacement of the mass. The displacement-detecting means includes a force feedback loop supplying electrostatic forces tending to restore the mass to its rest position in response to the displacement of the mass"). *See also* Oboe, *et al.*, "Control of a Z-axis MEMS Vibrational Gyroscope," IEEE 2004 at 156 ("compensating the displacement of proof mass due to Coriolis force with a feedback force, which is applied by electrostatic actuation").

69. Each Accused Product includes "a central circuitry receiving said angle rate signals in response to said motion of said carrier and said dither motion signals and outputting angular rate signals and digital low frequency inertial element displacement signals." For example, the LSM6DS3 Datasheet at Figure 6 shows "Gyroscope chain" circuitry that receives angle rate signals, applies an



IPR2024-00668
AGNC EX2007

Analog-to-Digital Conversion, filters the signals, and outputs digital angular rate signals:

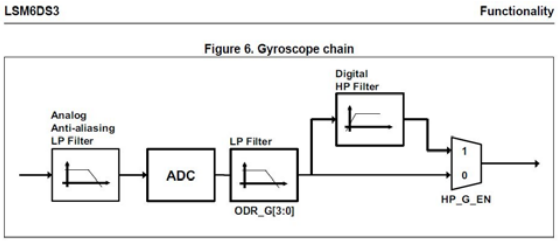


The output angular rate signals are stored in registers in the devices. *See, e.g.*, LSM6DS3 Datasheet at 63-64 ("Angular rate sensor pitch axis (X) angular rate output register (r).").

70. Additional diagrams of portions of the central circuitry can be seen at STMicroelectronics' U.S. Pat. App. No. 13/558,266, Fig. 5 ("driving device 103") and at L. Prandi, *et al*., "A Low-Power 3-Axis Digital-Output MEMS Gyroscope with Single Drive and Multiplexed Angular Rate Readout," IEEE International Solid-State Circuits Conference, pp.104-106, Feb. 2011, at Figure 6.1.2 ("Driving electronics").

71. For example, the central circuitry outputs digital low frequency inertial element displacement signals. For example, using nomenclature of the '122 Patent, the Driving electronics depicted in Figure 6.1.2 (detail below) implement a feedback loop—wherein dither motion signals SD1 and SD2 are converted to inertial element displacement signals and then passed through a low-pass filter to become low frequency inertial element displacement signals. Next, these signals are fed into a compactor block to become digital low frequency inertial element displacement signals:

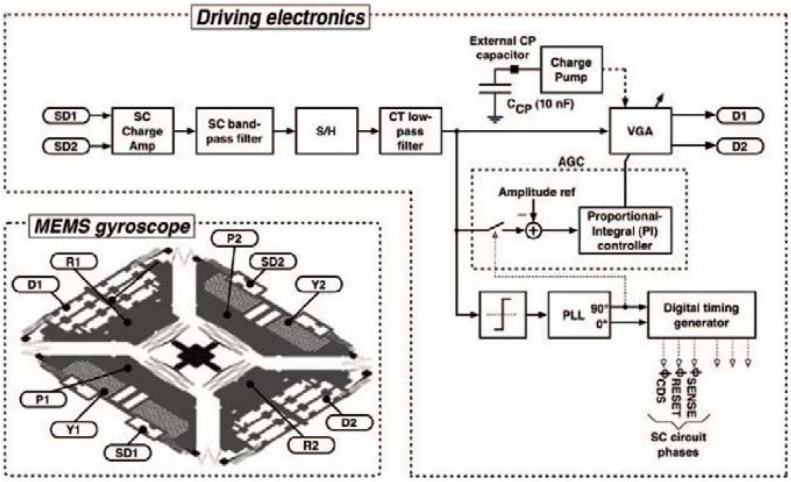


*See also* STMicroelectronics' U.S. Pat. App. No. 13/558,266, Fig. 5 (inertial element displacement signals $V_{FB1}$ and $V_{FB2}$, sent through low-pass filter "LPF," becoming digital low frequency inertial element displacement signals).

72. Each Accused Product includes "a digital signal processing system analyzing said digital low frequency inertial element displacement signals and feeding back said dither driver signals to said angular rate sensor unit." For example, portions of the digital signal processing system can be seen at STMicroelectronics' U.S. Pat. App. No. 13/558,266, Fig. 5 ("PLL" 27 and "discrete-time PID controller" 24) and at L. Prandi, *et al*., "A Low-Power 3-Axis Digital-Output MEMS Gyroscope with Single Drive and Multiplexed Angular Rate Readout," IEEE International Solid-State Circuits Conference, pp.104-106, Feb. 2011, at Figure 6.1.2 ('PLL" and "Proportional-Integral (PI) controller"):

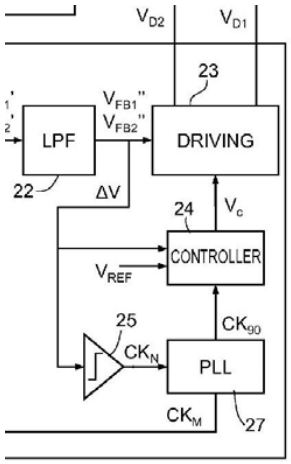


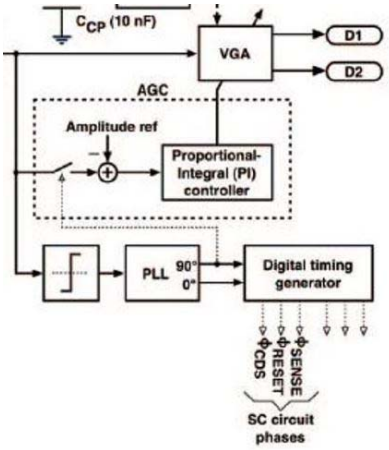


*See also* STMicroelectronics' U.S. Pat. App. No. 13/558,266 at [0053] ("The output of the comparator 25, which supplies a native clock signal $CK_N$, is connected to an input of the PLL circuit 27 so as to enable phase locking").

73. In this digital signal processing circuitry, the digital low frequency inertial element displacement signals are input to the Phase-Locked Loop ("PLL"), which in conjunction with the Controller, performs phase locking and amplitude control. *See, e.g.*, *id.* at [0051], [0053], [0055].

74. In addition, the digital signal processing circuitry of the LSM6DS3 IMU devices used in Nintendo's Accused Products feeds back dither driver signals to the angular rate sensor. For example, the circuits discussed above output driving voltages back to the MEMS structure. *See, e.g.*, *id.* at [0051], Fig. 5:

> Furthermore, the driving stage 23 is set cascaded to the lowpass filter 22 and has outputs connected to the driving terminals 13 a, 13 b of the microstructure 102, for supplying driving voltages $V_{D1}$, $V_{D2}$ such as to sustain oscillation of the microelectromechanical loop 18 at the driving frequency ωD, which is close to the mechanical resonance frequency ωR of the microstructure 102."

*See also* Prandi, *et al.*, Figure 6.1.2 (dither driver signals D1 and D2).

75. Each of the elements of at least claim 1 of the ’122 Patent is present in the Accused Products, literally and/or by the doctrine of equivalents.

76. By making, importing, using, offering for sale, and/or selling in the United States systems that infringe the ’122 patent, Nintendo has injured American GNC and is liable to American GNC for directly infringing one or more claims of the ’122 Patent, including without limitation claim 1 pursuant to 35 U.S.C. § 271(a).

77. Nintendo also infringed the ’122 Patent per 35 U.S.C. § 271(b) & (c).

78. Nintendo knowingly encouraged and intended to induce infringement of the ’122 Patent by making, importing, using, offering for sale, and/or selling in the United States, systems and methods that infringed the ’122 patent, with knowledge and specific intention that such products would be used by others and that such use would infringe. For example, Nintendo intended to and did induce its licensed component manufacturers to infringe by, for example, providing components, instructions, and expertise for implementing infringing systems. For example, Nintendo intended to and did induce its customers to infringe by, for example, providing the Accused Products, with knowledge and specific intention that such products would be used by Nintendo’s customers and that such use would infringe.

79. Nintendo took active steps, directly and/or through contractual relationships with others, to cause infringement with both knowledge of the ’122 Patent and the specific intent to cause the abovementioned licensed component manufacturers to make, use, import, offer for sale and/or sell in the United States systems that infringe one or more claims of the ’122 Patent. Such steps by Nintendo included, among other things, advising or directing the abovementioned licensed component manufacturers to make, use, import, offer for sale, and/or sell such systems in an infringing manner; advertising and promoting the use of these



IPR2024-00668
AGNC EX2007

systems in an infringing manner; providing components and expertise for others to make, use, offer for sale, and/or sell the infringing systems and methods; and/or distributing instructions that guide others to make, use, offer for sale, and/or sell the systems and methods in an infringing manner.

80. Nintendo also contributed to the infringement of the '122 Patent. Nintendo made, imported, used, sold, and/or offered to sell in the United States systems that infringe the '122 patent, knowing that they constitute a material part of the claimed invention, that they are especially made or adapted for use in infringing the '122 Patent, and that they are not staple articles or commodities of commerce capable of substantial non-infringing use.

81. Nintendo was aware of the '122 Patent and related American GNC patents, had knowledge of the infringing nature of its activities, and nevertheless continued its infringing activities. For example, by letter and claim charts on April 26, 2017, American GNC notified Nintendo of the existence of the American GNC patent portfolio, of its belief that Nintendo's products including the Switch were infringing the Asserted Patents, and the detailed evidence of that infringement. In addition, continuing as described above, American GNC representatives had substantial and detailed communications with Nintendo representatives about the Asserted Patents, their potential benefits, and their applicability to Nintendo's products including the Switch.

82. Nintendo's infringement of the '122 Patent was deliberate and willful, and this is therefore an exceptional case warranting an award of enhanced damages and attorneys' fees pursuant to 35 U.S.C. §§ 284-285.

83. As a result of Nintendo's infringement of the '122 Patent, American GNC has suffered monetary damages, and seeks recovery in an amount adequate to compensate for Nintendo's infringement, but in no event less than a reasonable royalty with interest and costs.



Bunsow De Mory LLP
701 El Camino Real, Redwood City CA
1 650 351 7248

**SECOND COUNT**

**(Infringement of U.S. Patent No. 6,671,648)**

84. American GNC incorporates by reference the allegations set forth in the above Paragraphs of this Complaint as though fully set forth herein.

85. Nintendo, through its own acts and those of its subsidiaries and intermediaries, made, imported, used, sold, and/or offered to sell in the United States, systems and methods that directly infringed the '648 Patent, including the above identified Nintendo's Switch and Switch Lite video game consoles, and its Joy-Con controllers and Pro Controllers, and other licensed controllers. Nintendo's Accused Products infringed at least claim 1 of the '648 Patent, literally and/or under the doctrine of equivalents.

86. In addition, licensed component manufacturers of Nintendo and customers of Nintendo have directly infringed one or more claims of the '648 Patent. Licensed component manufacturers of Nintendo have made, imported, used, offered for sale and/or sold in the United States systems that infringed one or more claims of the '648 Patent, including at least claim 1. Nintendo's customers have used Nintendo's Accused Products, the operation of which necessarily and by design infringed one or more claims of the '648 Patent, including at least claim 1.

87. The Accused Products infringe at least claim 1 of the '648 Patent. Each Accused Product includes at least one "micro inertial measurement unit." For example, as described above each accused Switch console and controller includes an IMU unit from the STMicroelectronics LSM6DS3 family. *See, e.g.*, https://www.techinsights.com/blog/nintendo-switch-teardown ("Posted: March 3, 2017, Updated: April 24, 2017"):

> On this main PCB we found … a STMicroelectronics SH641 6-axis accelerometer and gyroscope ultra-low power MEMS inertial sensor …



IPR2024-00668
AGNC EX2007

> the left and right controllers share a few parts in common. These include … a STMicroelectronics SH627 6-axis accelerometer and gyroscope ultra-low power MEMS inertial sensor, part of the LSM6DS3 family, a system-in-package featuring a 3D digital accelerometer and a 3D gyroscope.

*See also* LSM6DS3 Datasheet, DM00133076.pdf at 1 ("iNEMO inertial module: always-on 3D accelerometer and 3D gyroscope").

88. Each Accused Product includes "an angular rate producer comprising a X axis angular rate detecting unit which produces a X axis angular rate electrical signal, a Y axis angular rate detecting unit which produces a Y axis angular rate electrical signal, and a Z axis angular rate detecting unit which produces a Z axis angular rate electrical signal." For example, the LSM6DS3 family of devices, used by Nintendo in the Accused Products, includes an X-, Y-, and Z-axis gyroscope for angular rate detecting and producing an X-, Y-, and Z-axis angular rate electrical signal. *See, e.g.,* LSM6DS3 Datasheet, DM00133076.pdf at 26 ("An angular rate gyroscope is device that produces a positive-going digital output for counterclockwise rotation around the axis considered"), Figure 1 (detail):

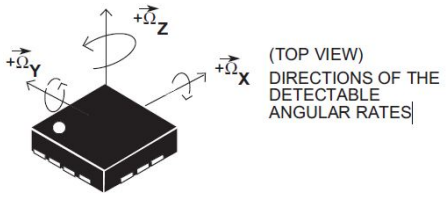


89. Each Accused Product includes "an acceleration producer comprising a X axis accelerometer which produces a X axis acceleration electrical signal, a Y axis accelerometer which produces a Y axis acceleration electrical signal, and a Z axis accelerometer which produces a Z axis acceleration electrical signal." For example, the LSM6DS3 family of devices, used by Nintendo in the Accused Products, includes an X-, Y-, and Z-axis accelerometer for acceleration detecting



IPR2024-00668
AGNC EX2007

and producing an X-, Y-, and Z-axis acceleration electrical signal. *See, e.g.,* LSM6DS3 Datasheet, DM00133076.pdf at 1 ("micromachined accelerometers"), Figure 1 (detail):

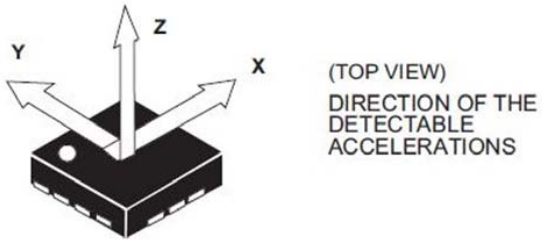


*See also* LSM6DS3TR-C Datasheet at Figure 1:

Figure 1. Pin connections

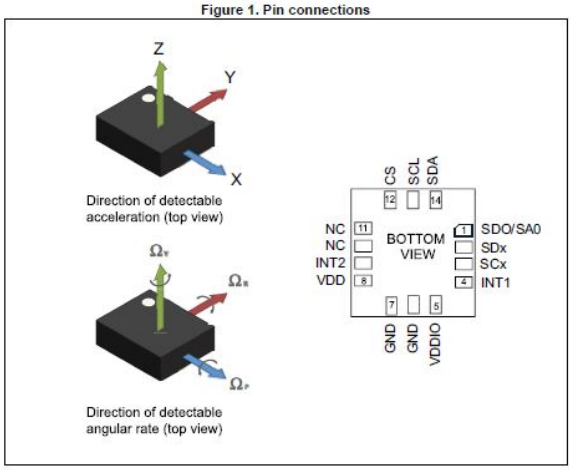


90. Each Accused Product includes "an angular increment and velocity increment producer, which is electrically connected with said X axis, Y axis and Z axis angular rate detecting units and said X axis, Y axis and Z axis accelerometers, receiving said X axis, Y axis and Z axis angular rate electrical signals and said X axis, Y axis and Z axis acceleration electrical signals from said angular rate producer and said acceleration producer respectively, wherein said X axis, Y axis and Z axis angular rate electrical signals and said X axis, Y axis and Z axis



IPR2024-00668
AGNC EX2007

acceleration electrical signals are converted into are digital angular increments and digital velocity increments respectively." For example, the Accused Products contain an angular increment and velocity increment producer (*e.g.*, a microprocessor on the LSM6DS3 or elsewhere on the Accused Product) that utilizes a sensor fusion algorithm, and which is electrically connected with the angular rate detecting units and accelerometers, receives the angular rate and acceleration electrical signals, and converts the angular rate and acceleration electrical signals into digital angular increments and digital velocity increments. *See, e.g.*, STMicroelectronics, Data brief, iNEMO Engine Pro Sensor Fusion algorithm, at Figure 2:

**Figure 2. Sensor fusion input and output**

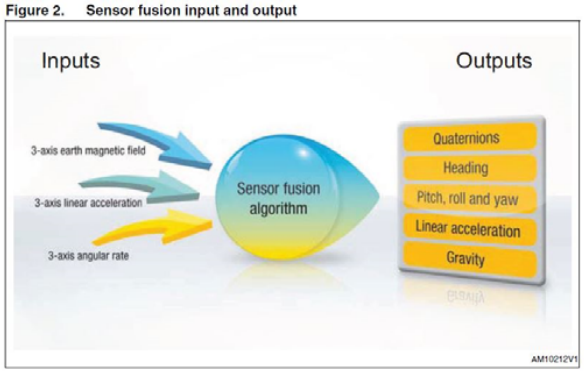


91. The MEMS gyroscope angular rate and accelerometer acceleration signals are converted to digital in the Accused Products. *See, e.g.*, LSM6DS3 Datasheet at Figure 6 ("Gyroscope chain" and "ADC"), Figure 4 ("Accelerometer chain" and "ADC"):

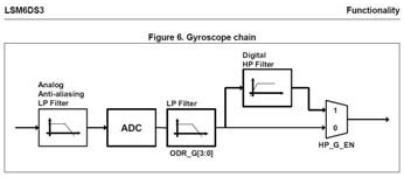


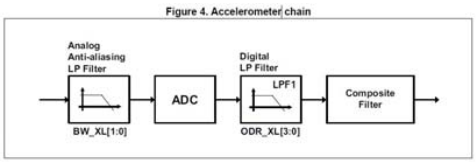

92. Using the processing capability of the Accused Products, Nintendo converts the angular rate and acceleration electrical signals into digital angular increments and digital velocity increments. *See, e.g.*, Technical Article TA0343 at 34 ("Gyroscope-enabled gaming control") (emphases added):

> With the 3-axis gyroscope, the above issues are solved because the gyroscope can ***measure the dynamic angular velocity*** which gives the user a more responsive and smooth feeling when playing games with the handheld device. Regardless of the rotation of the handheld device in 3D space, the 3-axis gyroscope can ***continuously give the angular velocity measurement*** around 3 axes.

93. *See also id.* at 28 ("convert the gyroscope's raw data into meaningful angular velocity and angular displacement values"), 29 ("converting the raw data into meaningful angular velocity values"), Figure 31:

**Figure 31. Motion gaming in handheld devices**

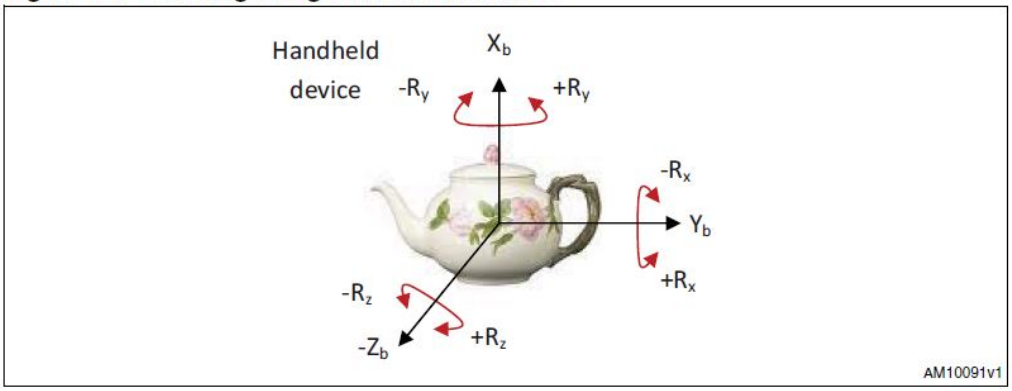


94. Each of the elements of at least claim 1 of the '648 Patent is present in the Accused Products, literally and/or by the doctrine of equivalents.

95. By making, importing, using, offering for sale, and/or selling in the United States systems that infringe the '648 patent, Nintendo has injured American GNC and is liable to American GNC for directly infringing one or more claims of



IPR2024-00668
AGNC EX2007

the ’648 Patent, including without limitation claim 1 pursuant to 35 U.S.C. § 271(a).

96. Nintendo also infringed the ’648 Patent per 35 U.S.C. § 271(b) & (c).

97. Nintendo knowingly encouraged and intended to induce infringement of the ’648 Patent by making, importing, using, offering for sale, and/or selling in the United States, systems and methods that infringed the ’648 patent, with knowledge and specific intention that such products would be used by others and that such use would infringe. For example, Nintendo intended to and did induce its licensed component manufacturers to infringe by, for example, providing components, instructions, and expertise for implementing infringing systems. For example, Nintendo intended to and did induce its customers to infringe by, for example, providing the Accused Products, with knowledge and specific intention that such products would be used by Nintendo’s customers and that such use would infringe.

98. Nintendo took active steps, directly and/or through contractual relationships with others, to cause infringement with both knowledge of the ’648 Patent and the specific intent to cause the abovementioned licensed component manufacturers to make, use, import, offer for sale and/or sell in the United States systems that infringe one or more claims of the ’648 Patent. Such steps by Nintendo included, among other things, advising or directing the abovementioned licensed component manufacturers to make, use, import, offer for sale, and/or sell such systems in an infringing manner; advertising and promoting the use of these systems in an infringing manner; providing components and expertise for others to make, use, offer for sale, and/or sell the infringing systems and methods; and/or distributing instructions that guide others to make, use, offer for sale, and/or sell the systems and methods in an infringing manner.



Bunsow De Mory LLP
701 El Camino Real, Redwood City CA
1 650 351 7248

IPR2024-00668
AGNC EX2007

99. Nintendo also contributed to the infringement of the ’648 Patent. Nintendo made, imported, used, sold, and/or offered to sell in the United States systems that infringe the ’648 patent, knowing that they constitute a material part of the claimed invention, that they are especially made or adapted for use in infringing the ’648 Patent, and that they are not staple articles or commodities of commerce capable of substantial non-infringing use.

100. Nintendo was aware of the ’648 Patent and related American GNC patents, had knowledge of the infringing nature of its activities, and nevertheless continued its infringing activities. For example, by letter and claim charts on April 26, 2017, American GNC notified Nintendo of the existence of the American GNC patent portfolio, of its belief that Nintendo’s products including the Switch were infringing the Asserted Patents, and of the detailed evidence of that infringement. In addition, continuing as described above, American GNC representatives had substantial and detailed communications with Nintendo representatives about the Asserted Patents, their potential benefits, and their applicability to Nintendo’s products including the Switch.

101. Nintendo’s infringement of the ’648 Patent was deliberate and willful, and this is therefore an exceptional case warranting an award of enhanced damages and attorneys’ fees pursuant to 35 U.S.C. §§ 284-285.

102. As a result of Nintendo’s infringement of the ’648 Patent, American GNC has suffered monetary damages, and seeks recovery in an amount adequate to compensate for Nintendo’s infringement, but in no event less than a reasonable royalty with interest and costs.



Bunsow De Mory LLP
701 El Camino Real, Redwood City CA
1 650 351 7248

IPR2024-00668
AGNC EX2007

## PRAYER FOR RELIEF

WHEREFORE, Plaintiff prays for judgment and seeks relief against Nintendo as follows:

(a) For judgment that U.S. Patent Nos. 6,508,122 and 6,671,648 have been infringed by Nintendo;

(b) For an accounting of all damages sustained by American GNC as the result of Nintendo's acts of infringement;

(c) For a finding that Nintendo's infringement was willful and enhancing damages pursuant to 35 U.S.C. § 284;

(d) For an award of past damages arising out of Nintendo's infringement of the Asserted Patents in an amount no less than a reasonable royalty, together with prejudgment and post-judgment interest, in an amount according to proof;

(e) For an award of attorneys' fees pursuant to 35 U.S.C. § 285 or otherwise permitted by law;

(f) For all costs of suit; and

(g) For such other and further relief as the Court may deem just and proper.

## DEMAND FOR JURY TRIAL

Pursuant to Rule 38(b) of the Federal Rules of Civil Procedure, American GNC demands a trial by jury of this action.

Dated: March 3, 2023

Respectfully submitted,

By: */s/ Michael N. Zachary*

Corey Johanningmeier (*pro hac vice* to be filed)
Michael N. Zachary (WSBA No. 27064)
**BUNSOW DE MORY LLP**
701 El Camino Real
Redwood City, CA 94063
Telephone: (650) 351-7248



IPR2024-00668
AGNC EX2007

Facsimile: (415) 426-4744
cjohanningmeier@bdiplaw.com
mzachary@bdiplaw.com

Attorneys for Plaintiff
**American GNC Corp.**



IPR2024-00668
AGNC EX2007