UNITED STATES PATENT AND TRADEMARK OFFICE

BEFORE THE PATENT TRIAL AND APPEAL BOARD

NINTENDO CO., LTD., and
NINTENDO OF AMERICA INC.,
Petitioners,

v.

AMERICAN GNC CORPORATION,
Patent Owner

IPR2024-00667 & -00668
U.S. Patent Nos. 6,508,122 & 6,671,648

DECLARATION OF LAWRENCE E. LARSON IN SUPPORT OF PATENT OWNER'S PRELIMINARY RESPONSES

I, Lawrence E. Larson, declare as follows:

INTRODUCTION

1. My name is Larry Larson. I have been retained by American GNC Corp. ("American GNC") to provide information and assistance regarding U.S. Patent No. 6,508,122 ("the '122 Patent") and U.S. Patent No. 6,671,648 ("the '648 Patent") (collectively, the "American GNC Patents"). Specifically, I have been asked to consider the Petitions for *Inter Partes* Review numbered IPR2024-00667 and IPR2024-00668 ("Petitions") regarding the Asserted Patents, and specifically the Declarations of Professor Darrin Young (EX1002) that accompany the Petitions.

2. For the purposes of this declaration concerning the '122 Patent, I have been asked to provide information and opinions about the state of the art and knowledge of a person of ordinary skill in the art, what such a person would understand from the American GNC Patents, what such a person would find disclosed in or obvious from the prior art references relied on in the Petitions, and related issues in response to the opinions expressed by Prof. Young.

3. I have personal knowledge of the facts and opinions set forth in this declaration, and, if called upon to do so, I would testify competently thereto.

4. I am currently Professor of Engineering at the School of Engineering, Brown University. I have also held the positions of Interim Provost of Brown

University, as well as Sorensen Family Dean and Founding Dean of the School of Engineering. I hold a Ph.D. in Electrical Engineering, as well as a M.B.A. degree, from the University of California, Los Angeles, and Master of Engineering and Bachelor of Science degrees in Electrical Engineering from Cornell University. I have over 40 years of experience in the design of high-performance circuits for RF communications and other applications including MEMS, both in industry and academia. I have published hundreds of papers in refereed journals and conference proceedings, and am a named inventor on at least 43 issued patents. My experience will be described further below under Qualifications and Background, and in my CV (EX2009).

5. I am being compensated for my work in connection with this matter at my standard hourly consulting rate. My compensation for my work in this matter is not dependent in any way on my conclusions and opinions, the contents of this declaration, the substance of any further opinions or testimony that I may provide, or the outcome of this matter or any matter involving the American GNC Patents.

6. The materials I have reviewed in forming the opinions in this declaration include the following:

a. The ’122 Patent and ’648 Patent (EX1001 to each Petition).

b. The *Fujiyoshi* (EX1003), *Townsend* (EX1004), *Kumar* (EX1005), and *Cox* (EX1006) references cited in the ’122 patent Petition.

c. The *Smith* (EX1003), *Tingleff* (EX1004), *Chan* (EX1005), *Bernstein* (EX1006), *Irwin* (EX1007), *Merhav* (EX1008), *Yamawaki* (EX1009/EX1010), and *Saubolle* (EX1011) references cited in the ’648 patent Petition.

d. The Declaration of Professor Darrin Young (EX1002 to each Petition) and the materials discussed therein.

7. In addition, I have considered the relevant legal standards, as they have been explained to me by counsel and as I understand them. I have also considered the knowledge and understanding of a person of ordinary skill at the time of the filing of the American GNC Patents, of which I am familiar.

QUALIFICATIONS AND BACKGROUND

8. My education and professional background is in Electrical Engineering, with a particular focus on high-speed integrated circuit design. I hold a Ph.D. (1986) in Electrical Engineering from the University of California, Los Angeles, as well as a M.B.A. degree (1996) from that university, and Master of Engineering (1980) and Bachelor of Science (1979) degrees in Electrical Engineering from Cornell University.

9. I am currently a Professor of Engineering at the School of Engineering at Brown University. I recently completed an appointment as Interim Provost for Brown University. I have also been the Sorensen Family Dean (Inaugural Chair

Holder) and Founding Dean of the School of Engineering there. I held that position beginning in 2011, during which time I oversaw a large expansion in the number of tenure-track engineering faculty, substantial increases in external research funding, the creation of new graduate programs, and the construction of a state-of-the-art research and teaching facility.

10. Over the course of my career, I have held a variety of positions in academia and industry. These include but are not limited to the following:

11. From 1980 to 1988, I was a Member of Technical Staff at Hughes Aircraft and Hughes Research Laboratories, where I was responsible for the development of CMOS and III-V analog and digital integrated circuits, modeling and characterization of MESFETs and HEMTs and the development of improved III-V process techniques. During my tenure, among other things, I helped developed the first high-performance GaAs switched-capacitor circuits with clock rates in excess of 100 MHz, demonstrated the first use of low-temperature buffer GaAs MESFET technology with digital integrated circuits, setting a record for digital divider performance (22 GHz), and developed GaAs MESFET operational amplifier with record GBW (10 GHz).

12. From 1988 to 1992, I was an Adjunct Associate Professor at UCLA, where I was responsible for senior level digital and analog integrated circuit design courses and a graduate analog MOS integrated circuit design course.

13. From 1992 to 1994, I was an Assistant Manager for the DARPA / Hughes MIMIC Program, where I was responsible for Program Management of the Advanced Technology Portion of DARPA/Hughes MIMIC Program, with a budget of approximately $8M/yr. In that capacity, I was responsible for the technical and program direction of GaAs HBT and PHEMT efforts. I also directed insertion of advanced GaAs-based technology into next generation communication and radar systems.

14. From 1988 to 1994, I was also a Manager in the HEMT Technology Department, Microwave Devices and Circuits Laboratory, at Hughes Research Laboratories, where I directed research in high-speed III-V materials, devices, and circuits, and was responsible for approximately $4M/yr. in Corporate IR&D and Government Research Contracts. In that capacity, I helped develop the first space-qualified InP low-noise millimeter wave HEMT. This effort was awarded the 1996 Lawrence Hyland Award - the highest technical achievement award at Hughes Electronics.

15. I pioneered the development of MEMS technology for microwave and RF applications in the early 1990's and hold many fundamental patents in the MEMS field as applied to microwave applications. In fact, an IEEE review article (Barker and Wel1er, IEEE Microwave Magazine, December, 2007) on RF MEMS technology, published in 2007, stated "For RF-MEMS, the "Hey" day may be traced

back to Larry Larson's seminal 1990 work at Hughes Research Labs on an electromechanical rotary switch on GaAs." This MEMS technology has now become an extremely active area of worldwide development, and RF MEMS switches are produced by major semiconductor companies like Analog Devices and Qorvo, with a worldwide market of roughly $300M in 2024 (Valuates Reports).

16. I also helped demonstrate the first InP-based HEMT low-noise and high- power MMICs from 2 - 60 GHz, with world record noise figures and power-added efficiencies. I further helped establish a state-of-the-art InP HEMT MMIC foundry at HRL, developed the first low-power/high-speed InP HEMT digital IC technology with ring oscillator delays of 4.2 pS, and directed the research program that demonstrated HEMTs with record fT's and fMAX's above 300 GHz (1993), which produced the highest frequency room temperature integrated circuit ever reported - a 210 GHz VCO (IEDM 1994).

17. From 1994 to 1996, I was a Manager in the Telecommunications Technology Department, Microwave Devices and Circuits Laboratory, at Hughes Research Laboratories, where I directed the research and development of integrated circuits for commercial RF and microwave communications applications, including DBS, cellular telephone, VSAT, and PCS.

18. From 1996 to 2011, I held the CWC Industry Chair Professor in Wireless Communications, in the Department of Electrical and Computer

Engineering at the University of California, San Diego (UCSD). Among other things, I helped develop improved integrated circuit techniques and novel device structures for wireless communications applications. This required development of high-frequency integrated circuits, devices, and packaging techniques for ultra-wide bandwidth telecommunications applications, and development of novel data converter and analog-signal processing architectures that are matched to communications applications.

19. From 2000 to 2001, while on academic leave from UCSD, I was a Director at IBM's West Coast Design Center of Excellence in IBM Research Division, where I directed development of Radio Frequency Integrated Circuits for SiGe RFICs for 3rd Generation wireless cellular applications. I was also responsible for leading the team that developed a complete Wideband CDMA chip set for several "first tier" cellular telephone providers.

20. From 2001 to 2006, I was the Director of the UCSD Center for Wireless Communications (http://cwc.ucsd.edu), which is one of the largest industry-funded University Research Centers in the world. Involving over 20 professors, and supporting roughly 50 PhD graduate students during my tenure, with an annual budget in excess of $3M, the CWC conducted research in all areas of wireless communications, from fundamental devices and materials to software applications.

I was responsible for all aspects of the Center, from new member development to financial management and establishing the research direction.

21. From 2007 to 2011, I was the Chair of the Department of Electrical and Computer Engineering at the University of California, San Diego. The ECE Department at UCSD is the largest graduate program on the UCSD campus. As Chair, I oversaw the faculty development (hiring, promotion, and tenure process), educational policy and teaching, successful accreditation review, department resource allocation, and external relations. I also led the development (with CS) of the Executive Masters of Advanced Study in Embedded Wireless Systems program.

22. I have authored more than 125 refereed journal publications and more than 250 peer reviewed conference publications. I have authored and/or edited 12 books or chapters, including:

- L. E. Larson, P. T. Greiling, and J. F. Jensen, "GaAs Device Physics and Circuit Design", in **Microprocessor Design for GaAs Technology**, V. Milutinovic, Ed., (Prentice Hall, York, 1989).
- L. E. Larson, "High-Speed Analog-to-Digital and Digital-to-Analog Conversion with GaAs Technology: Prospects, Trends, and Obstacles", in **GaAs Technology and Devices and Their Impact on Circuits and Systems**, D. Haigh, Ed., (Peter Peregrinus, Ltd, 1989).
- L. E. Larson and G. C. Temes, "Signal Conditioning and Interface Circuits", in **McGraw-Hill Handbook of Digital Signal Processing**, S. Mitra, Ed., 1993.

- L. E. Larson, “GaAs Operational Amplifier Design”, in **High-Speed Analog Integrated Circuits**, R. Goyal, Ed., (Wiley Interscience, York, 1995).

- L. E. Larson, **RF and Microwave Circuit Design for Wireless Communications** (Artech House, Inc., 1996).

- M. Matloubian and L. E. Larson, “InP-Based Power HEMTs”, in **Pseudomorphic HEMT Technology and Applications**, Ed. R. L. Ross et al., (Kluwer Academic Publishers, Netherlands, 1996).

- J. Groe, and L. E. Larson, **CDMA Mobile Radio Design: Systems, Algorithms, and Circuits** (Artech House, Inc., 2000).

- L. Larson and F. Chang, “Si/SiGe HBT Technology for Low-Power Mobile Communications Systems Applications,” **in RF Technologies for Low-Power Wireless Communications**, Ed. T. Itoh, G. Haddad, and J. Harvey, Wiley Interscience, 2001.

- X. Zhang, L. Larson, and P. Asbeck, **Design of Linear Outphasing Power Amplifiers for Wireless Communications**, Artech House, 2002. 196 pages. BOOK

- **Digital Communications Using Chaos and Nonlinear Dynamics**, Larson, Lawrence E; Liu, Jia-Ming; Tsimring, Lev S. (Eds.) 2006, XIV, Springer.

- **Circuits and Systems for Future Generations of Wireless Communications**, A. Tasic, W. Serdijn, L. Larson, G. Setti, G. (Eds.), 2009, VIII, Springer.

- **Fast Hopping Frequency Generation in Digital CMOS**, Mohammad Farazian, Lawrence E. Larson, Prasad S. Gudem. 2012 Springer.

I am also named inventor on at least 43 US patents.

23. I have been elected a Fellow of the IEEE, and am currently a “Life

Fellow" of the IEEE. The Fellow is the highest grade of membership of the IEEE, a world professional body consisting of over 300,000 electrical and electronics engineers, with only one-tenth of one percent (0.1%) of the IEEE membership being elected to the Fellow grade each year. Election to Fellow is based upon votes cast by existing Fellows in IEEE. I have also served on a number of IEEE Committees and as a Paper Reviewer.

24. EX2009 contains a true and correct copy of my *Curriculum Vitae* further describing my background and experience.

UNDERSTANDING OF RELEVANT LEGAL STANDARDS

25. In forming my opinions here, I have applied the following understanding of certain legal concepts related to anticipation, obviousness, combinations of references, and knowledge of one of ordinary skill in the art. This understanding was supplied to me by counsel.

26. I understand that in order for a patent claim to be invalid as anticipated by a prior art reference, each and every element of that patent claim must be found disclosed in that reference, explicitly or inherently, to a person of ordinary skill in the art. Inherent disclosure requires that the claimed element be the only possible option given the other disclosures of the reference. If any single element of a claim is not disclosed in the reference, the entire claim is not anticipated.

27. I understand that a patent may be invalid if the differences between the claimed subject matter and the prior art are such that the subject matter as a whole would have been obvious at the time the invention was made to a person of ordinary skill in the pertinent art.

28. I understand that a person of ordinary skill in the art provides a reference point from which the prior art and claimed invention should be viewed. This reference point prevents one from using his or her own insight or hindsight in deciding whether a claim is obvious.

29. I also understand that an obviousness determination includes the consideration of various factors such as (1) the scope and content of the prior art; (2) the differences between the prior art and the asserted claims; (3) the level of ordinary skill in the pertinent art; and (4) the existence of secondary considerations such as commercial success, long-felt but unresolved needs, failure of others, etc.

30. I understand that in considering the scope and content of the prior art, references must be reasonably related (i.e., analogous) to the claimed invention of that patent.

31. I understand that the test for determining whether a prior art reference constitutes analogous art to the claimed invention is (1) whether the reference is from the same field of endeavor, regardless of the problem addressed and, (2) if the reference is not within the field of the inventor's endeavor, whether the reference

still is reasonably pertinent to the particular problem the inventor is trying to solve.

32. I also understand that the existence of each and every element of the claimed invention in the prior art does not necessarily prove obviousness of the combination of those elements, and that inventions usually rely on building blocks of prior art.

33. I understand that one may consider whether a reason existed at the time of the invention that would have prompted a person of ordinary skill in the art in the relevant field to combine the known elements in the way the claimed invention does. The reason could come from the prior art, the background knowledge of one of ordinary skill in the art, the nature of the problem to be solved, market demand, or common sense. But it cannot come from hindsight.

34. I understand that in considering whether a claimed invention is obvious, one may but is not required to find obviousness if at the time of the claimed invention there was a reason that would have prompted a person having ordinary skill in the field of the invention to combine the known elements in a way the claimed invention does, taking into account such factors as: (1) whether the claimed invention was merely the predictable result of using prior art elements according to their known function(s); (2) whether the claimed invention provides an obvious solution to a known problem in the relevant field; (3) whether the prior art teaches or suggests the desirability of combining elements claimed in the invention; (4) whether the prior

art teaches away from combining elements in the claimed invention; (5) whether it would have been obvious to try the combinations of elements, such as when there is a design need or market pressure to solve a problem and there are a finite number of identified, predictable solutions; and (6) whether the change resulted more from design incentives or other market forces. To find it rendered the invention obvious, the prior art must provide a reasonable expectation of success. Obvious to try is not sufficient in unpredictable technologies.

35. I understand that each claim must be evaluated separately for obviousness, and that it is improper to use hindsight. In other words, one must consider only what was known at the time of the invention.

36. I understand that, when present, secondary indicia of non-obviousness must always be considered and can serve as an important check on hindsight bias. These factors may include (1) a long felt but unmet need in the prior art that was satisfied by the invention of the patent; (2) commercial success or lack of commercial success of processes covered by the patent; (3) unexpected results achieved by the invention; (4) recognition and praise of the invention by others skilled in the art; (5) taking of licenses under the patent by others; (6) skepticism, disbelief in or incredulity on the part of those skilled in the art that the patentee's approach worked; (7) rapid replacement of the prior art devices in the industry; (8) unsuccessful attempts by those skilled in the art to make the invention; (9) teaching

away by those skilled in the art; and (10) deliberate copying of the invention. I also understand that there must be a relationship, or nexus, between any such secondary indicia and the invention.

37. I have been informed and understand that the obviousness analysis requires a comparison of the properly construed claim language to the prior art on a claim-by-claim basis.

38. I understand that questions of fact concerning obviousness, such as the knowledge of a person of skill in the art, ordinarily must be proven by clear and convincing evidence. For an obviousness combination, obviousness must be proven by clear and convincing evidence such that a person of ordinary skill in the art at the time of the alleged invention would have had a reason (or reasons) for combining the teachings of those prior art references to achieve the claimed invention, and that same person of ordinary skill in the art would have had a reasonable expectation of success from combining those teachings.

39. I understand that the disclosures in a patent or prior art reference are viewed from the perspective of a person of ordinary skill in the art at the time of the invention.

40. I understand that a person having ordinary skill in the art is a hypothetical person and the concept is used to analyze the relevant art without the benefit of hindsight. A person of ordinary skill in the art is presumed to be one who

thinks along the lines of conventional wisdom in the art. I understand that the hypothetical person of ordinary skill is presumed to have knowledge of all references that are sufficiently related to one another and to the pertinent art, and to have knowledge of all arts reasonably pertinent to the particular problem that the claimed invention addresses.

THE AMERICAN GNC PATENTS

The '122 Patent:

41. I have reviewed the American GNC Patents (EX1001 to each Petition). I understand that the '122 Patent issued from U.S. Patent Application No. 09/662,438, which was filed on September 15, 2000. And that the '122 Patent claims priority to effective priority date of U.S. Provisional Application No. 60/451,229 and 60/154,700, filed September 16, 1999. I understand that claims 1 and 3 are asserted by American GNC against Nintendo, and are challenged in the Petition.

42. In the late 1990s, many companies and research institutions were working on commercial applications of MEMS. My own research work at Hughes Research Labs (now HRL Laboratories) in MEMS started in the early 1990's and continued until the early 2000's at UCSD. During that time, I published several papers in this area at major international conferences and obtained many U.S. Patents related to RF MEMS technology (see U.S. Patent Nos, 5,087,482 & 5,121,089 & 5,164,688 & 5,168,249 & 5,175,521 & 6,504,447 & 6,847,266 & 6,917,268).

43. In 1999, in the context of MEMS sensors for measuring motion, I understand that American GNC was developing and patenting, among other things, a MEMS angular rate sensor that employed digital signal processing in the dither motion control loop. ’122 Patent, Abstract (“a digital signal processing system analyzes digital low frequency inertial element displacement signals to feed back the dither drive signals to the angular rate sensor unit”), 9:39-54 (claim 1).

44. As American GNC explained in its ’122 Patent, the potential benefit of using MEMS devices in sensor applications was seen as very high, for example because this could result in “shrinking the sensor size by several orders of magnitude,” and would allow integrated control electronics to be added to the same chip. *Id.*, 1:48-56. The patent also explained that designing and manufacturing working MEMS-based sensor products was “still very challenging,” due to the high demands for, *e.g.*, accuracy and stability. *Id.*, 2:1-4. This comports with my understanding of the state of MEMS product development at the time.

45. As explained in American GNC’s ’122 Patent, the component blocks of claim 1 (angular rate sensor unit, central circuitry, and digital signal processing system) could be arranged as shown in Figure 1:

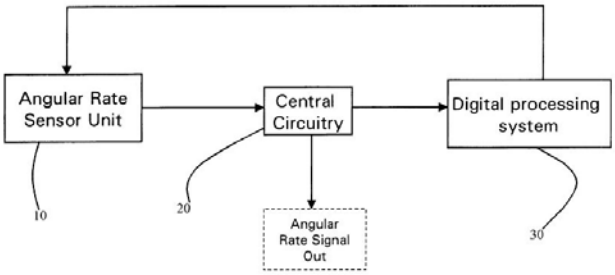

Figure 1

46. An example embodiment of the angular rate sensor unit and central circuitry is shown in Figure 6 of the ’122 Patent. That figure shows capacitive pickoff excitation signals and dither drive signals received by the sensor unit, as well as displacement restoring signals received from “angle signal loop circuitry 22.” This figure does not depict the digital signal processor, but shows an example of a Demodulator, Low-Pass Filter, and “A/D Converter” as part of the central circuitry for outputting “digital low frequency inertial element displacement signals” to the digital signal processor:

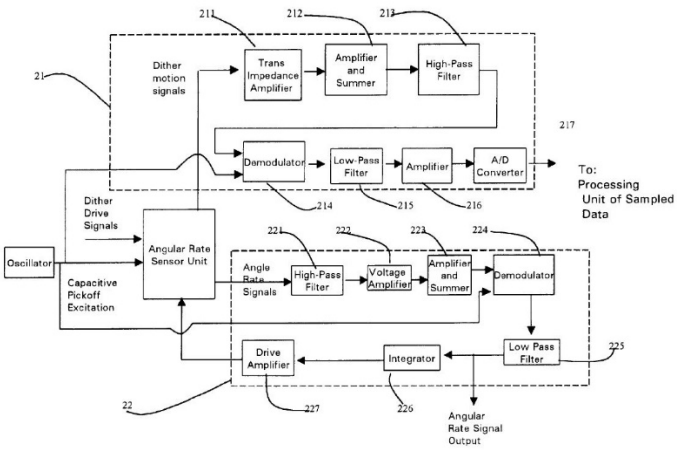

Figure 6

47. Claim 1 of the ’122 patent requires that the digital signal processor

receive and analyze the "digital low frequency inertial element displacement signals." *Id.*, 9:46-54. The patent describes, and Figure 7 shows, various examples of the analysis that can be performed on the digital signals:

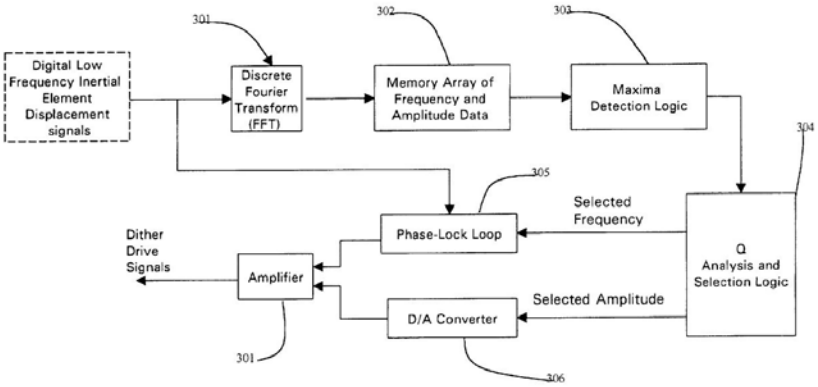

Figure 7

Claim 1 does not require a particular analysis from these disclosed options, but does require converting signals to digital, analyzing them, and "feeding back" dither drive signals to the angular rate sensor. *Id.*, 9:51-54. I understand that the inventors of the '122 Patent recognized the novelty and benefit of including digital signal processing in the dither control loop in this manner, stating that it would provide a dramatic improvement in reliability. *Id.*, 2:31-42.

48. I also understand from reviewing American GNC's Complaint against Nintendo (EX2007) that American GNC was successful at developing and commercializing a rate-integrating sensor based on the techniques claimed and patented in the '122 Patent. I understand that American GNC credited their application of signal processing expertise for much of the success of this innovation.

49. In my opinion, and in view of the state of the art as I understand it to have been in 1999, it would not have been obvious to a person of ordinary skill to insert a digital signal processing system into the dither control loop of a sensor like the one claimed, or those discussed in the references identified by Nintendo or Professor Young. To do so would have been seen to add significant complexity to the solutions that were being discussed; solutions relying on analog components in simple feedback loops. For example, *Fujiyoshi* teaches only a simple connection or wire in the place Nintendo claims it would have been obvious to insert an analog-to-digital converter, a digital signal processing system, and a digital-to-analog converter. *See* EX1003, Figure 9 (two instances of "c").

50. Also in my opinion, nothing in the references identified by Nintendo or Professor Young teaches or suggests this inventive step of adding digital signal processing to the dither control loop of the sensors those references discuss. As I describe more below, *Fujiyoshi* and *Mitamura* provide analog-only solutions, and contain no suggestion of any need to switch from those solutions to a complicated digital solution like the one in *Townsend.*

<u>The '648 Patent</u>:

51. I have also reviewed American GNC's '648 Patent. I understand that the '648 Patent issued from U.S. Patent Application No. 10/017,310, which was filed on October 22, 2001. And that the '648 Patent claims priority to effective priority

date of U.S. Patent Application No. 09/477,151, filed January 4, 2000. I understand that claims 1 and 4 are asserted by American GNC against Nintendo, and are challenged in the Petition.

52. In 2000, I understand that American GNC was developing and patenting, among other things, a MEMS inertial measurement unit ("IMU") that "employed MEMS rate and acceleration sensors" available at the time. '648 Patent, Abstract, 2:46-50 ("Although the MEMS angular rate sensors and MEMS accelerometers are available commercially and have achieved micro chip-size and low power consumption, however, there is not yet available high performance, small size, and low power consumption IMUs"), 23:43-24:21 (claim 1).

53. In the '648 Patent, American GNC's inventors described some of the problems with existing MEMS sensors that made using them in an IMU a difficult challenge, and described what needed to be done to address them. *E.g.*, '648 Patent, 6:12-41 ("Associated electronic circuitry needs to be designed" and then "shrunk"), 17:19-36 ("The performance of the dither drive signals is critical for the whole performance of a MEMS angular rate producer.").

54. This is consistent with my understanding and experience with designing RF MEMS and associated control circuits around this time. Doing so was a non-trivial design and development task, with little available knowledge and literature to guide the application of MEMS technology.

55. I also understand from reviewing American GNC's Complaint against Nintendo (EX2007) that American GNC was successful at developing and commercializing a MEMS Inertial Measurement Unit based on the techniques claimed and patented in the '648 Patent. *See also* '648 Patent, Fig. 17.

ONE OF ORDINARY SKILL

56. I have been asked to provide my opinion of the level of education and experience that would have been possessed by one of ordinary skill in the art at the time of the American GNC Patents, which I take for purposes of this declaration to be as of the current earliest undisputed priority date, on September 16, 1999 for the '122 Patent, or on January 4, 2000 for the '648 Patent. I understand that factors such as the education level of those working in the field, the sophistication of the technology, the types of problems encountered in the art, prior art solutions to those problems, and the speed at which innovations are made, may help establish the level of skill in the art at the time.

57. During the period of these disclosures, the technological development of this field – MEMS inertial sensors – was still in its early research stages. As a result, in my opinion, a person of ordinary skill in the art would have at least a Master's Degree in Electrical or Electronics Engineering, and approximately five years of relevant experience in the development of control systems for inertial navigation, MEMS semiconductor processing, and analog circuit design—with

additional education substituting for experience and vice versa.

58. At the time of the American GNC Patents, there was no established industry or large body of academic work in MEMS devices, and an undergraduate Engineering student would have been unlikely to have encountered opportunities to study them.

59. As described above, I obtained my Ph.D. in Electrical Engineering in 1986, and I had more than 10 years of professional experience in the analysis and design of high-performance MEMS devices and control circuits prior to the priority date of the American GNC Patents. I believe that my own education and experience exceeds that of a person of ordinary skill in the art, under my definition or Prof. Young's definition, today and as of September, 1999.

60. I understand that Prof. Young's declarations give a definition of a person of ordinary skill in the art that would only require a Bachelor's degree, with some professional experience. *See, e.g.*, IPR2024-00667, EX1002, ¶14 ("two to three years").

61. I disagree with Prof. Young about his opinions concerning what a person of ordinary skill would find disclosed or obvious from the prior art, as detailed in part below. I have considered both his and my opinion concerning the level of skill, and my opinions as expressed in this declaration do not change if I instead apply his definition.

FUJIYOSHI

62. I have reviewed EX1003, U.S. Patent No. 5,945,599 ("*Fujiyoshi*"), which describes a "resonance type angular velocity sensor." EX1003, Abstract.

63. *Fujiyoshi* describes an analog control loop for a vibrating sensor, that feeds back the output of a "capacity detecting circuit" 170, via connection "c," to a "self-exciting circuit" 176, an "amplitude control circuit" 177, and AC amplifier 179, which then drives the vibrating mass 1. It is also fed back to a "frequency control circuit" 174. *Id.*, Fig. 9 (annotated with feedback connection):

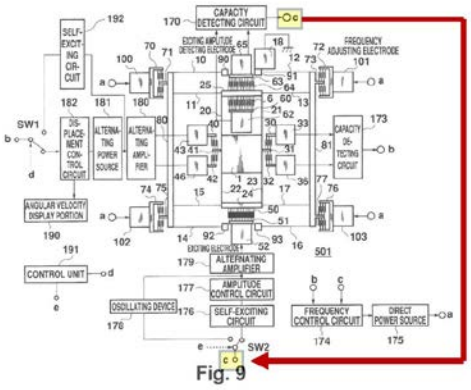

Fig. 9

64. The loop disclosed by *Fujiyoshi* that I just described does not contain any digital components. For example, the amplitude control circuit 177 is not described, other than as a circuit that receives an oscillating voltage, and keeps its amplitude constant. EX1003, 19:63-20:11, 21:29-33. This function could be performed by a simple analog circuit, such as an analog peak detector combined with an analog feedback loop, but the details are not given in *Fujiyoshi*.

65. I have reviewed the Declaration of Professor Young, and understand

that he suggests it would have been obvious for a person of ordinary skill to add "a sample-and-hold device, analog-to-digital converter, buffer," a "digital processing unit," and "a buffer and digital-to-analog converter," between the two instances of connection "c" at the top and bottom of Figure 9. EX1002, ¶¶180-181. Professor Young does not cite to any teaching of *Fujiyoshi* to support this opinion, and no disclosure of the reference does so in my opinion. He also does not draw the extent to which he is proposing an ordinary engineer would modify *Fujiyoshi*'s control loop, as to do so would illustrate how unlikely it would be for a person of ordinary skill to be motivated to add this complicated circuitry in place of a wire. EX1003, Fig. 9 (annotations below):

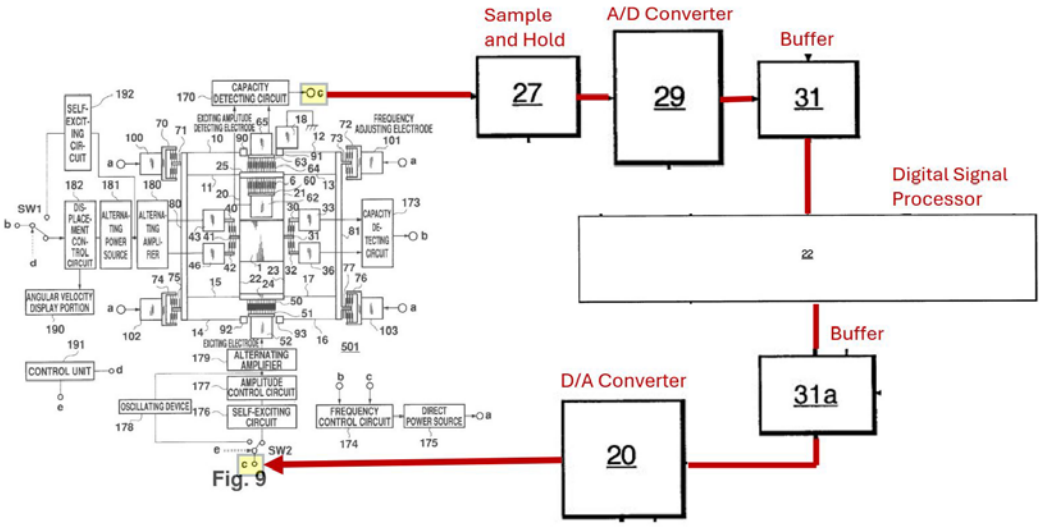

66. I do not agree that a person of ordinary skill would have found this very complex modification to *Fujiyoshi*'s wire "c" to be obvious, and I do not agree they would have been motivated to make that change. My opinion does not change if I

assume that the person of ordinary skill was aware of *Townsend*.

67. The *Townsend* reference does not disclose any specific benefit that would have been deemed applicable to the complete analog feedback loop taught in *Fujiyoshi*. To the extent that *Townsend* suggests that analog circuits are hard to specify or design (EX1002, ¶178), *Fujiyoshi* already teaches an analog circuit design that purportedly solves problems of noise, sensitivity, and reliability. EX1003, 6:35-52 ("sensor resolution can be improved"), 8:23-48 ("When a displacement controller having an above structure is provided, the linearity, sensibility, frequency characteristic, temperature characteristic, and the like of the resonance type angular velocity sensor can be improved."). True or not, *Fujiyoshi* taught a person of ordinary skill that its analog feedback loop would solve known problems in the art. There is simply no suggestion to look at other solutions.

68. For at least these reasons, I do not agree that a person of ordinary skill would be motivated to make the combination of *Fujiyoshi* and *Townsend* proposed by Professor Young, or that the combination renders obvious the "digital signal processing system for analyzing" or "digital low frequency inertial element displacement signals" elements of '122 Patent claim 1.

MITAMURA

69. I have reviewed EX1009, a translation of Japanese Patent Application No. H9-42973 ("*Mitamura*"), which describes an "angular velocity sensor" which is

purportedly "not susceptible to the effects of noise acceleration and other types of noise and achieves high sensitivity and high precision." EX1009, Abstract.

70. *Mitamura* describes an analog amplitude control loop for a vibrating sensor, that feeds back the modulated amplitude output of a "control circuit" 87, via drive voltages "Vd1," summed with an oscillator output 86, which then drives the vibrating mass 77. *Id.*, [0045]-[0046], Fig. 21:

[FIGURE 21]

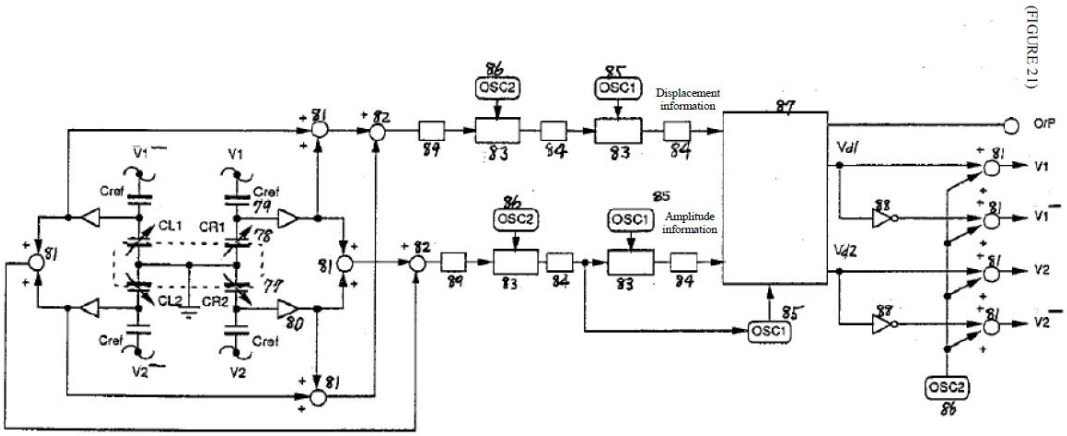

77…vibrating mass, 78…detection capacitance, 79…reference capacitance Cref, 80…buffers, 81…adder
82…subtractor, 83…demodulator, 84…low-pass filter, 85…oscillator OSC1, 86…oscillator OSC2
87…control circuit, 88…inverter, 89…high-pass filter

Mitamura discloses that "control circuit" 87 in Figure 21 above is shown in Figure 26 below. For the vibration amplitude control loop, a modulation amount is calculated in arithmetic unit 91, based on a difference from a reference voltage, and then input into an amplitude modulator 92. *Id.*, [0046], Fig. 26:

[FIGURE 26]

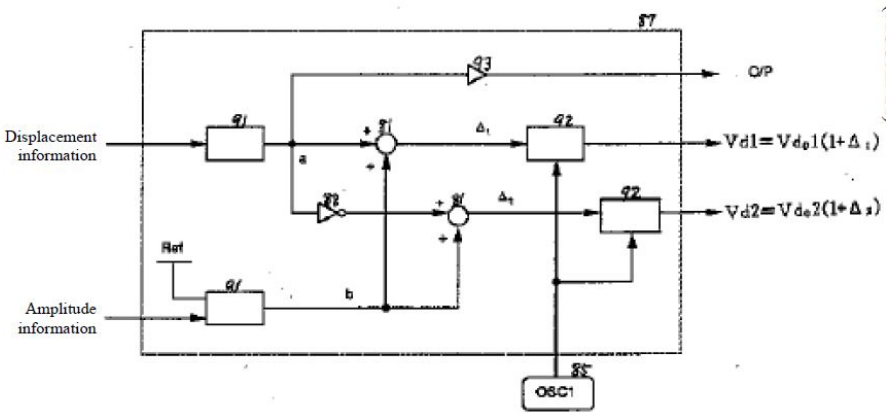

(FIGURE 26)

81…adder addition 85…oscillator OSC1, 87…control circuit, 88…inverter, 91…arithmetic unit 92…amplitude modulator 93…amplifier

71. The loop disclosed by *Mitamura* that I just described does not contain any digital components. For example, the arithmetic unit 91 is not described, other than as a circuit that computes a modulation amount "based on a deviation from a set reference level" Ref. EX1009, [0046], Fig. 26. This function could be performed by a simple analog circuit, such as a subtractor, but the details are not given in *Mitamura*.

72. I have reviewed the Declaration of Professor Young, and understand that he suggests it would have been obvious for a person of ordinary skill to add "sample-and-hold devices, buffers, analog-to-digital converters, digital-to-analog converters," and a "digital processing unit," in or around arithmetic unit 91 in Mitamura's Figures 21 and 26. EX1002, ¶¶240. Professor Young does not cite to any teaching of *Mitamura* to support this opinion, and no disclosure of the reference does so in my opinion. As with *Fujiyoshi*, he also does not draw the extent to which

he is proposing an ordinary engineer would modify *Mitamura*'s control loop, as to do so would illustrate how unlikely it would be for a person of ordinary skill to be motivated to add this complicated circuitry digital circuitry to the analog loop discussed in Mitamura. EX1006, Fig. 26 (annotations below):

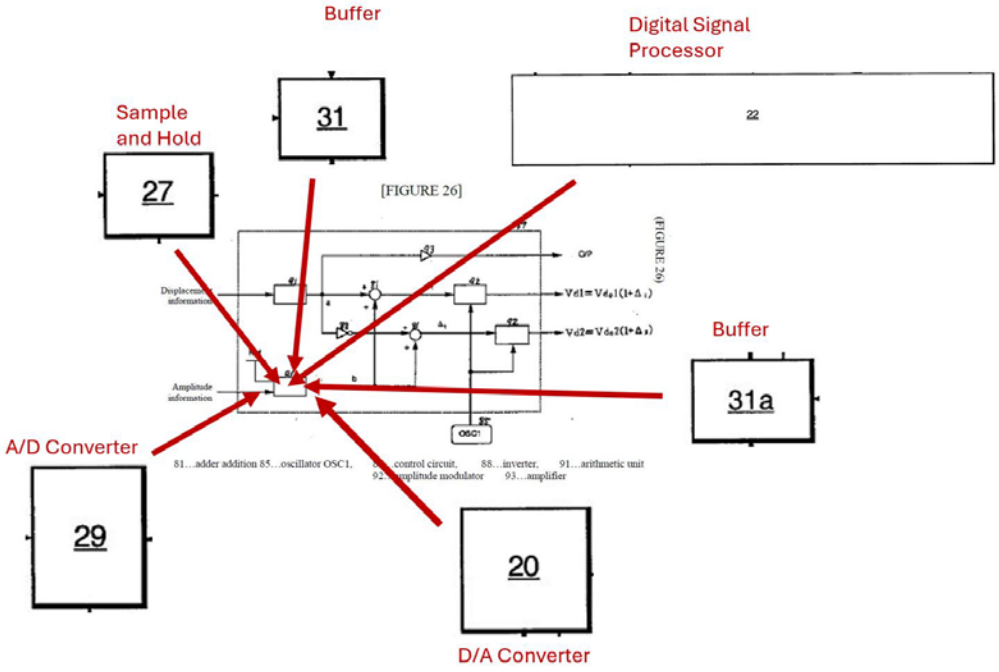

73. I do not agree that a person of ordinary skill would have found this very complex modification to or after *Mitamura*'s arithmetic unit 91 to be obvious, and I do not agree they would have been motivated to make that change. Compared to the simple analog circuit that *Mitamura* discusses for its arithmetic unit, an implementation involving analog-to-digital converters, a digital signal processor, and digital-to-analog converters would be much more complex, and changing

Mitamura to use such a system would involve significant design and engineering work. My opinion does not change if I assume that the person of ordinary skill was aware of *Townsend*.

74. The *Townsend* reference does not disclose any specific benefit that would have been deemed applicable to the complete analog feedback loop taught in *Mitamura*. To the extent that *Townsend* suggests that analog circuits are hard to specify or design (EX1002, ¶244), *Mitamura* already teaches an analog circuit design that purportedly solves problems of noise, sensitivity, and precision. EX1003, Abstract ("not susceptible to the effects of noise acceleration and other types of noise and achieves high sensitivity and high precision"). In particular, *Mitamura* teaches various analog approaches for the elimination of amplitude variation in its feedback loop. *Id.* [0034] ("This effect can be eliminated by monitoring the vibration amplitude and using the configurations shown in Figures 11, 12, and 13 to make it constant."). True or not, *Mitamura* taught a person of ordinary skill that its analog feedback loop would solve known problems in the art. There is simply no suggestion to look at other solutions.

75. For at least these reasons, I do not agree that a person of ordinary skill would be motivated to make the combination of *Mitamura* and *Townsend* proposed by Professor Young, or that the combination renders obvious the "digital signal processing system for analyzing" or "digital low frequency inertial element

displacement signals" elements of '122 Patent claim 1.

SUBSTITUTION OF MEMS SENSORS FOR CONVENTIONAL

76. I have reviewed the Declaration of Professor Young concerning the '648 Patent, and understand that he suggests it would have been obvious for a person of ordinary skill to replace the accelerometer and gyroscope elements in systems like those taught in *Smith*, *Tingleff*, or *Yamawaki*, with MEMS acceleration and rate sensors. *See* EX1002 ('648 Petition), ¶¶98-104, 156-157, 187.

77. In my opinion, Professor Young severely underestimates the knowledge, skill, and level of re-design that would be required to make this substitution of sensor technology type. Changing one type of sensor for another would require non-trivial re-design of the manufacturing process and associated control circuits, as Professor Young appears to acknowledge. EX1002 ('648 Petition), ¶99. And in particular, MEMS sensors at the time required complicated electronic circuitry to reliably control, as the '648 Patent described and taught. *See* '648 Patent, Abstract, 17:19-36.

78. I do not agree with Professor Young's suggestion that this substitution would be "straightforward" or implemented with "conventional techniques without undue experimentation." EX1002 ('648 Petition), ¶99, 104. While MEMS sensors existed at the time, the field of applying them in practice was nascent, without many successful examples to guide persons of ordinary skill. *See* '648 Patent at 2:46-50

("not yet available"). My own work with applications for similar RF MEMS devices involved many novel techniques and much experimentation, as seen in the patents and recognition I received as briefly discussed above. I understand that American GNC also received patents, recognition, and citations for its work in MEMS motion sensors. *E.g.*, EX2007 at ¶¶16-37. Based on this, and on my understanding as detailed here, integration of MEMS rate and acceleration sensors into an IMU at the time of the American GNC Patents was a difficult challenge beyond the capabilities of one of only ordinary skill, in what was a rapidly developing art.

79. I do not agree that a person of ordinary skill would have found this complicated substitution of MEMS technology to be obvious, for any of the systems in the *Smith*, *Tingleff*, or *Yamawaki* references, and I do not agree they would have been motivated to make that change. The design challenges involved, as also described in the '648 Patent, and also experienced by myself in my own work with control circuits for similar RF MEMS devices, would have been substantial for one of only ordinary skill, if possible for them at all.

CONCLUSION

80. This declaration and the opinions and statements herein are made to the best of my knowledge and understanding, based on the material available to me at the time. All statements made on my knowledge herein are true and all

statements made on my belief are believed to be true.

Executed this 12th day of June, 2024.

By: _____
Lawrence E. Larson, Ph.D