US006669689B2

(12) **United States Patent**
Lehmann et al.

(10) **Patent No.: US 6,669,689 B2**
(45) **Date of Patent: Dec. 30, 2003**

(54) **CRYOSURGICAL CATHETER**

(75) Inventors: **John W. Lehmann**, Wayland, MA (US); **Dan Wittenberger**, Pierrefonds (CA); **Claudia Lückge**, Pierrefonds (CA); **Jean-Pierre Lalonde**, Verdun (CA); **Cristian Petre**, Laval (CA); **Domenic Santoianni**, Kirkland (CA)

(73) Assignee: **CryoCath Technologies Inc.**, Kirkland (CA)

(*) Notice: Subject to any disclaimer, the term of this patent is extended or adjusted under 35 U.S.C. 154(b) by 0 days.

(21) Appl. No.: **10/050,452**

(22) Filed: **Jan. 16, 2002**

(65) **Prior Publication Data**

US 2002/0062122 A1 May 23, 2002

Related U.S. Application Data

(63) Continuation of application No. 09/845,535, filed on Apr. 30, 2001, which is a continuation of application No. 09/201,071, filed on Nov. 30, 1998, now Pat. No. 6,235,019, which is a continuation-in-part of application No. 08/893,825, filed on Jul. 11, 1997, now Pat. No. 5,899,899, which is a continuation-in-part of application No. 08/807,382, filed on Feb. 27, 1997, now Pat. No. 5,899,898.

(51) **Int. Cl.**[7] **A61B 18/18**
(52) **U.S. Cl.** **606/22**; 606/23
(58) **Field of Search** 606/20–25, 41, 606/42, 45–50; 607/96, 101–102, 104–106, 113

(56) **References Cited**

U.S. PATENT DOCUMENTS

3,903,871	A	9/1975	Chisum et al.
3,938,514	A	2/1976	Boucher
4,029,099	A	6/1977	Fifield
4,176,662	A	12/1979	Frazer
4,375,220	A	3/1983	Matvias
4,411,656	A	10/1983	Cornett, III
4,509,370	A	4/1985	Hirschfeld
4,620,769	A	11/1986	Tsuno
4,660,571	A	4/1987	Hess et al.
4,664,120	A	5/1987	Hess
4,686,996	A	8/1987	Ulbrich
4,690,155	A	9/1987	Hess
4,699,147	A	10/1987	Chilson et al.
4,704,104	A	11/1987	Christensen
4,709,698	A	12/1987	Johnston et al.
4,725,267	A	2/1988	Vaillancourt
4,754,752	A	7/1988	Ginsburg et al.
4,776,349	A	10/1988	Nashef et al.
4,787,882	A	11/1988	Claren
4,813,425	A	3/1989	Malis
4,945,912	A	8/1990	Langberg
4,946,440	A	8/1990	Hall
4,979,948	A	12/1990	Geddes et al.
4,998,933	A	3/1991	Eggers et al.
5,007,437	A	4/1991	Sterzer
5,010,894	A	4/1991	Edhag
5,015,240	A	5/1991	Soproni et al.
5,078,713	A	1/1992	Varney
5,100,388	A	3/1992	Behl et al.
5,139,496	A	8/1992	Hed

(List continued on next page.)

FOREIGN PATENT DOCUMENTS

GB	002163655	A	3/1986
JP	402095364	A	4/1990
JP	405293077	A	11/1993
WO	WO 9817187		4/1998

Primary Examiner—Roy D. Gibson
(74) *Attorney, Agent, or Firm*—Christopher & Weisberg, P.A.

(57) **ABSTRACT**

A cryogenic catheter includes an outer flexible member having at least one cryogenic fluid path through the flexible member. The at least one fluid path is defined by a plurality of flexible members disposed within the outer flexible member.

7 Claims, 10 Drawing Sheets

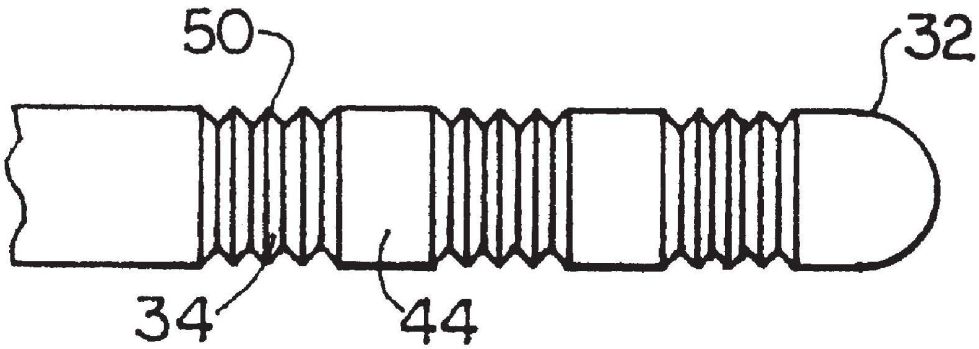

U.S. PATENT DOCUMENTS

5,147,355 A 9/1992 Friedman et al.
5,168,880 A * 12/1992 Sogawa et al. 607/102
5,205,298 A 4/1993 Hurst
5,224,943 A 7/1993 Goddard
5,228,442 A 7/1993 Imran
5,231,995 A 8/1993 Desai
5,281,213 A 1/1994 Milder et al.
5,281,215 A 1/1994 Milder
5,293,869 A 3/1994 Edwards et al.
5,314,408 A 5/1994 Salmon et al.
5,327,881 A 7/1994 Greene
5,334,181 A 8/1994 Rubinsky et al.
5,342,295 A 8/1994 Imran
5,363,882 A 11/1994 Chikama
5,364,353 A 11/1994 Corfitsen et al.
5,403,309 A 4/1995 Coleman et al.
5,409,469 A 4/1995 Schaerf
5,423,807 A 6/1995 Milder
5,452,582 A 9/1995 Longsworth
5,466,222 A 11/1995 Ressemann et al.
5,487,385 A 1/1996 Avitall
5,520,682 A 5/1996 Baust et al.
5,545,200 A 8/1996 West et al.
5,569,161 A 10/1996 Ebling et al.
5,575,773 A 11/1996 Song et al.
5,624,392 A 4/1997 Saab
5,669,870 A 9/1997 Elist
5,769,702 A 6/1998 Hanson
5,792,105 A 8/1998 Lin et al.
5,800,482 A 9/1998 Pomeranz et al.
5,810,802 A 9/1998 Panescu et al.
5,876,324 A 3/1999 Trouchine
5,921,982 A * 7/1999 Lesh et al. 606/41
5,957,963 A 9/1999 Dobak, III
6,001,117 A 12/1999 Huxel et al.
6,033,426 A 3/2000 Kaji
6,096,068 A 8/2000 Dobak, III et al.
6,106,518 A 8/2000 Wittenberger et al.
6,149,677 A 11/2000 Dobak, III
6,162,171 A 12/2000 Ng et al.
6,190,348 B1 2/2001 Tiemann et al.
6,224,624 B1 5/2001 Lasheras et al.
6,235,019 B1 5/2001 Lehmann et al.
6,238,371 B1 5/2001 Himbert et al.
6,238,428 B1 5/2001 Werneth et al.
6,245,095 B1 6/2001 Dobak, III et al.
6,248,089 B1 6/2001 Porat
6,248,096 B1 6/2001 Dwork et al.
6,251,130 B1 6/2001 Dobak, III et al.
6,254,626 B1 7/2001 Dobak, III et al.
6,270,482 B1 8/2001 Rosoff et al.
6,270,488 B1 8/2001 Johnson et al.
6,283,294 B1 9/2001 Thorball et al.
6,312,452 B1 11/2001 Dobak, III et al.
6,315,761 B1 11/2001 Shcherbina et al.
6,319,235 B1 11/2001 Yoshino
6,319,248 B1 11/2001 Nahon
2001/0001830 A1 5/2001 Dobak, III et al.
2001/0001831 A1 5/2001 Dobak, III et al.
2001/0002442 A1 5/2001 Dobak, III et al.
2001/0011184 A1 8/2001 Dobak, III et al.
2001/0011185 A1 8/2001 Dobak, III et al.
2001/0016763 A1 8/2001 Lasheras et al.
2001/0021865 A1 9/2001 Dobak, III et al.
2001/0021866 A1 9/2001 Dobak, III et al.
2001/0029394 A1 10/2001 Dobak, III et al.
2001/0047138 A1 11/2001 Kokate et al.

* cited by examiner

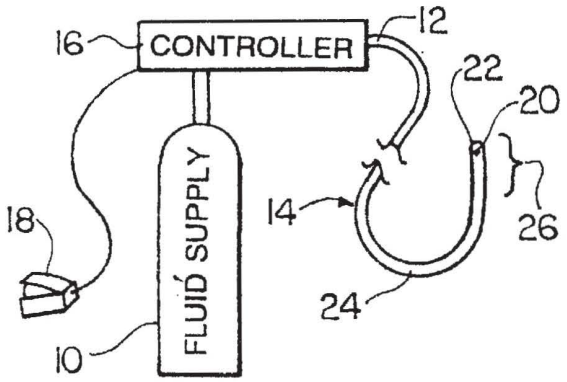

FIG. 1

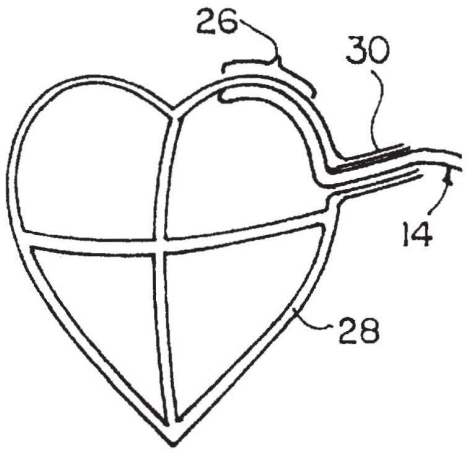

FIG. 2

FIG. 3

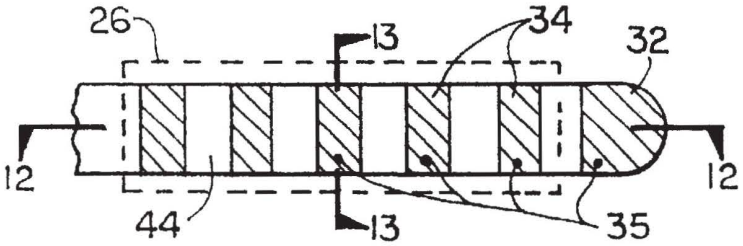

FIG. 4

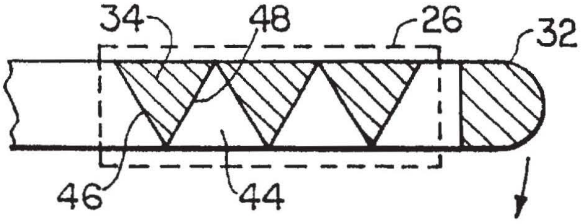

FIG. 5

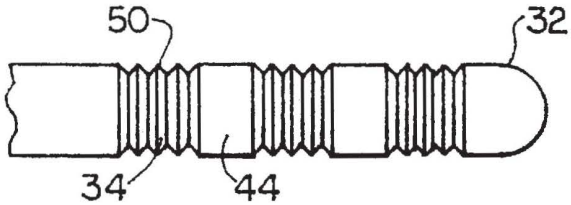

FIG. 6

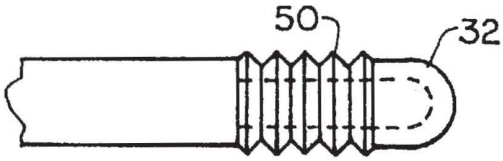

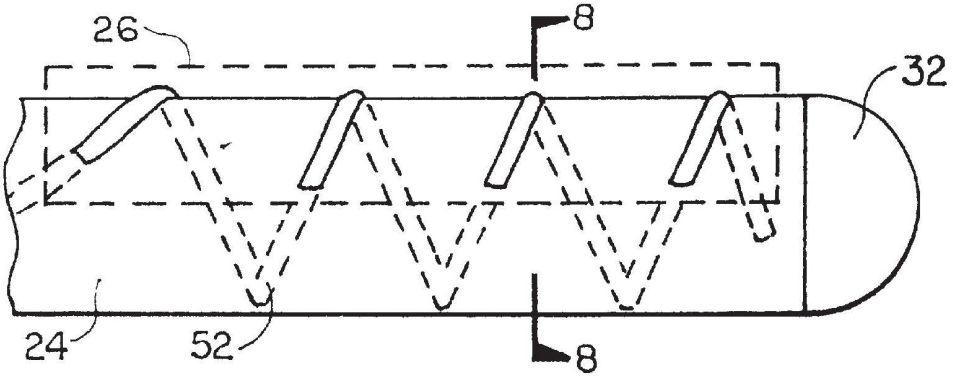

FIG. 7

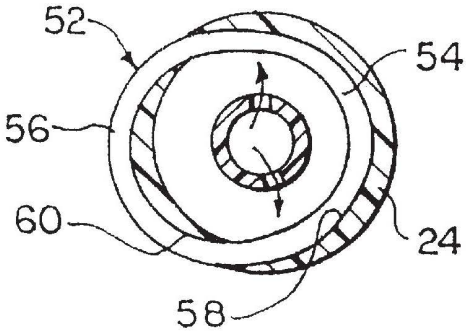

FIG. 8

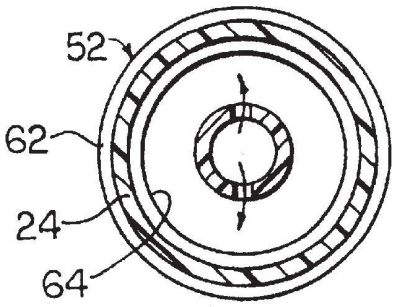

FIG. 9

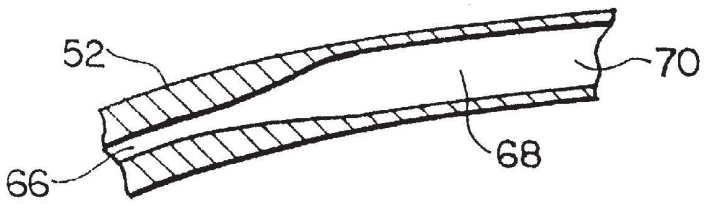

FIG. 10

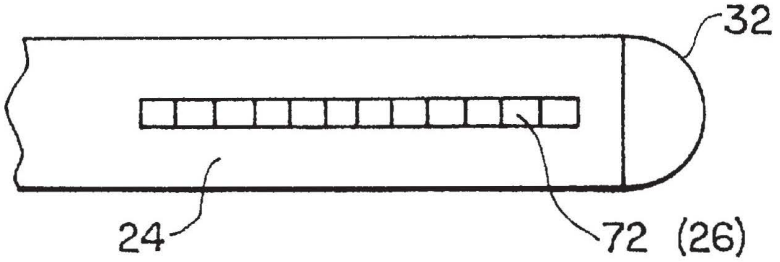

FIG. 11

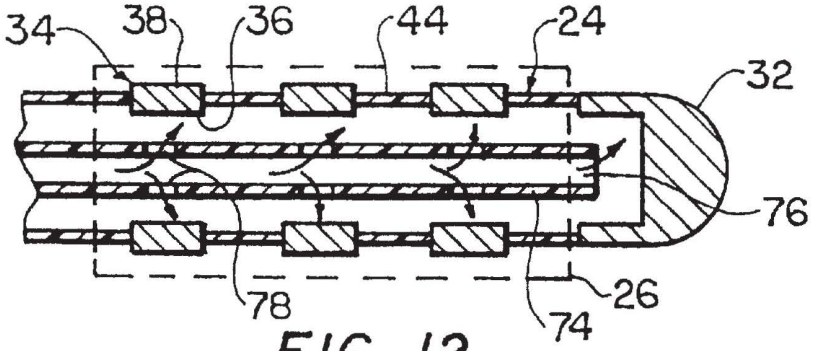

FIG. 12

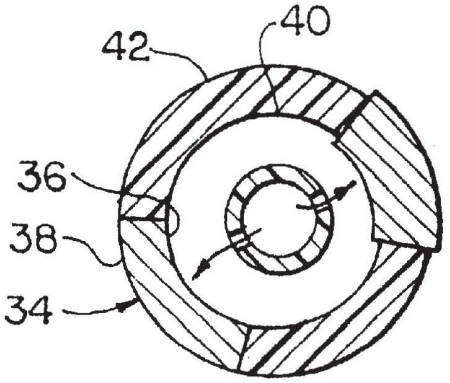

FIG. 13

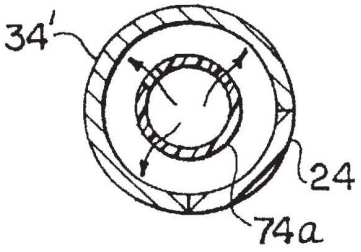

FIG. 14

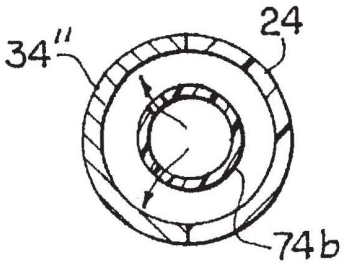

FIG. 15

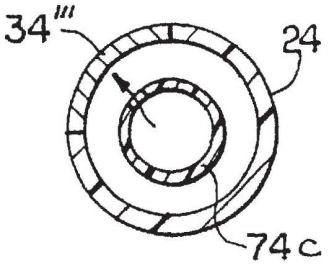

FIG. 16

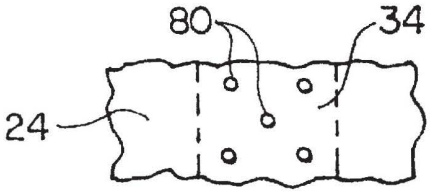

FIG. 17

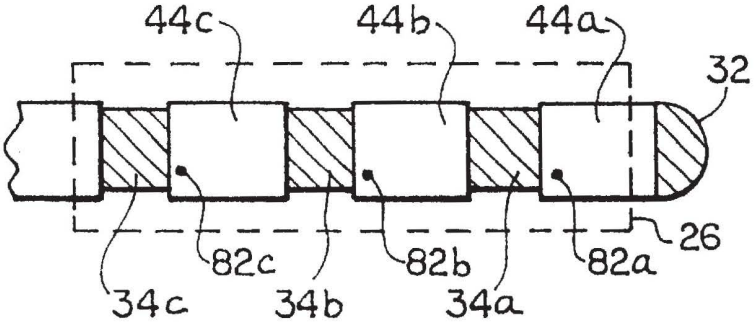

FIG. 18

	PRESS. [psi]	TEMPERATURE [°C]			
		TIP	RING1	RING2	RING3
Test I					
	230	-45	6	16	13
	250	-45	-36	3	1
	270	-43	-43	-19	-20
	290	-40	-47	-23	-22
	310	-40	-47	-32	-25
	330	-39	-47	-38	-27
	350	-39	-47	-47	-31
	370	-40	-47	-48	-45
	390	-39	-47	-48	-49
	410	-36	-46	-47	-49
	430	-36	-46	-48	-49
Test II					
	235	-50			
	275	-51	-52	-4	6
	300	-44	-50	-53	-2
	325	-43	-51	-52	-24
	350	-43	-50	-51	-33
	375	-42	-49	-50	-52
	400	-40	-49	-50	-53
	425	-39	-48	-49	-51
	449	-37	-47	-48	-50
Test III					
	235	-48	-40	20	25
	275	-48	-42	0	5
	300	-47	-47	-38	-8
	325	-45	-49	-44	-25
	350	-42	-51	-51	-35
	375	-41	-49	-52	-51
	400	-38	-47	-48	-52
	425	-38	-47	-48	-53
	449	-36	-47	-47	-50

FIG. 19

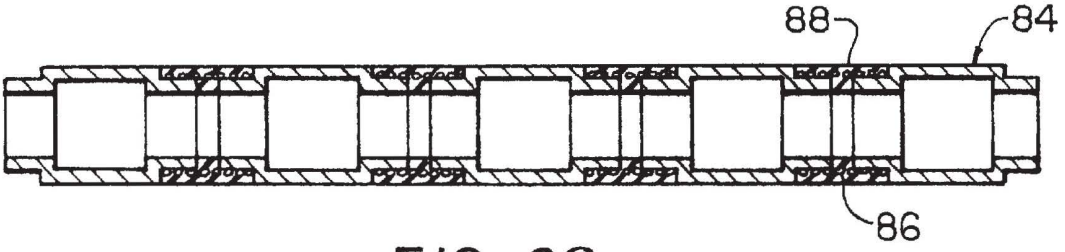

FIG. 20

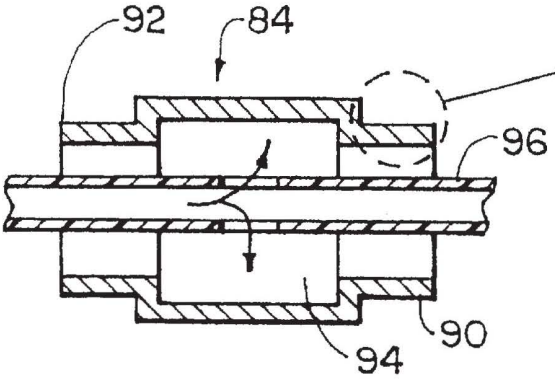

FIG. 21

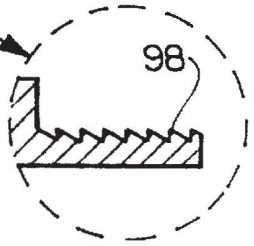

FIG. 22

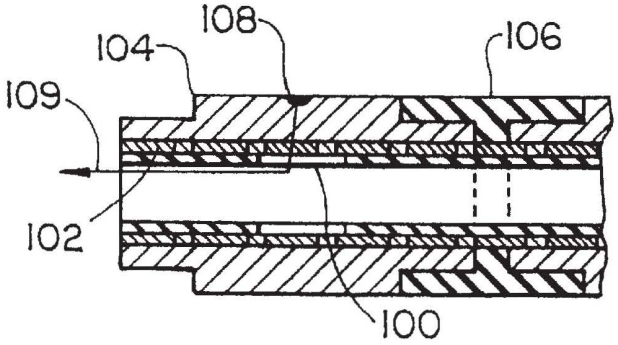

FIG. 23

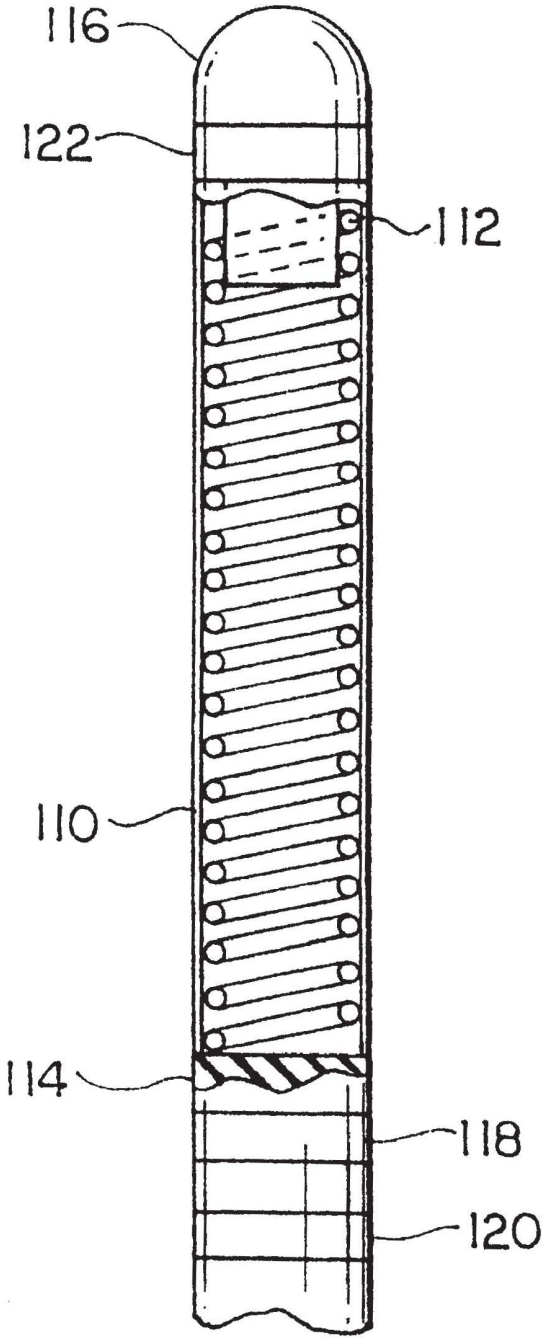

FIG. 24

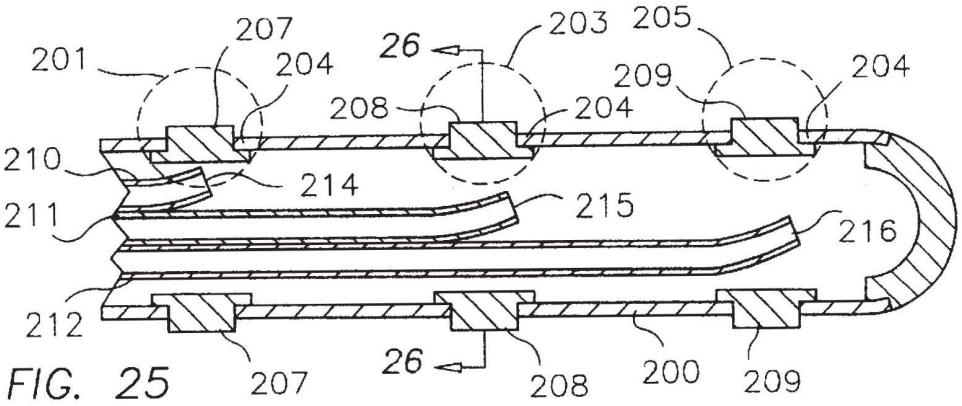

FIG. 25

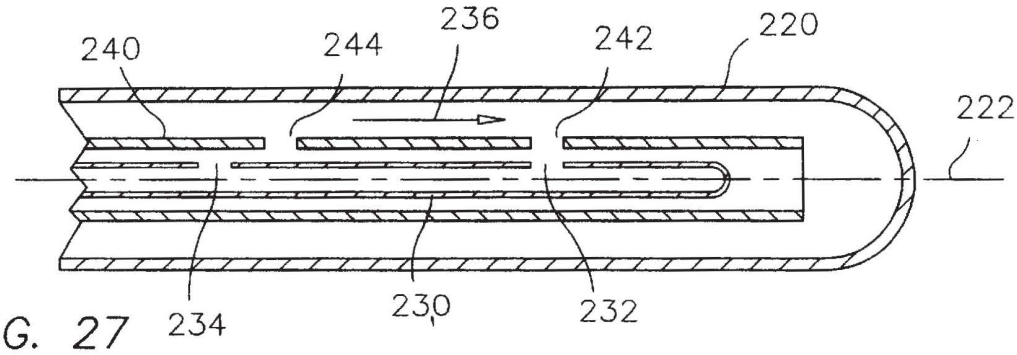

FIG. 27

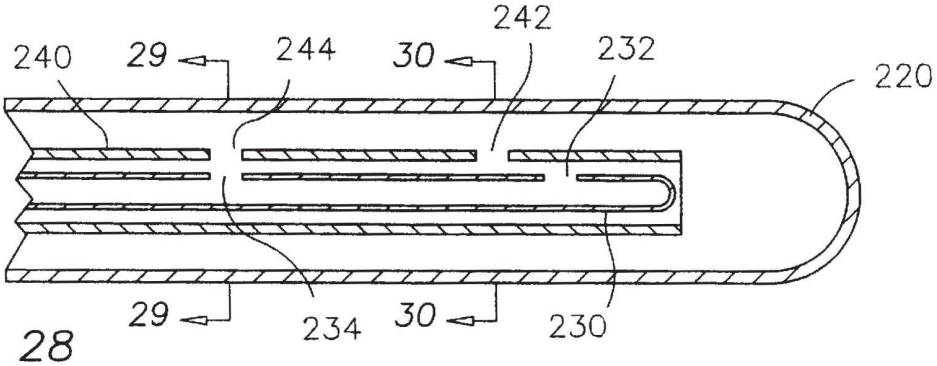

FIG. 28

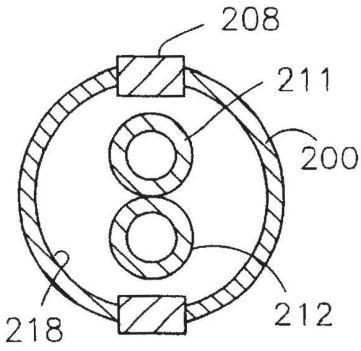

FIG. 26

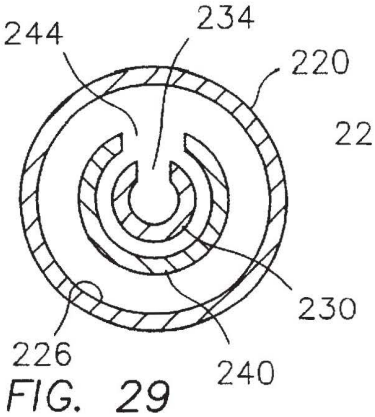

FIG. 29

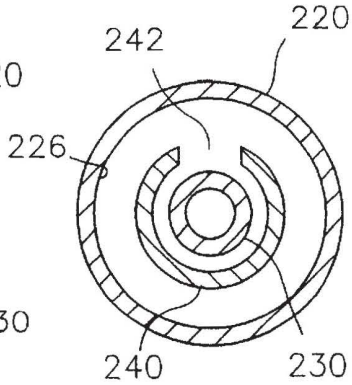

FIG. 30

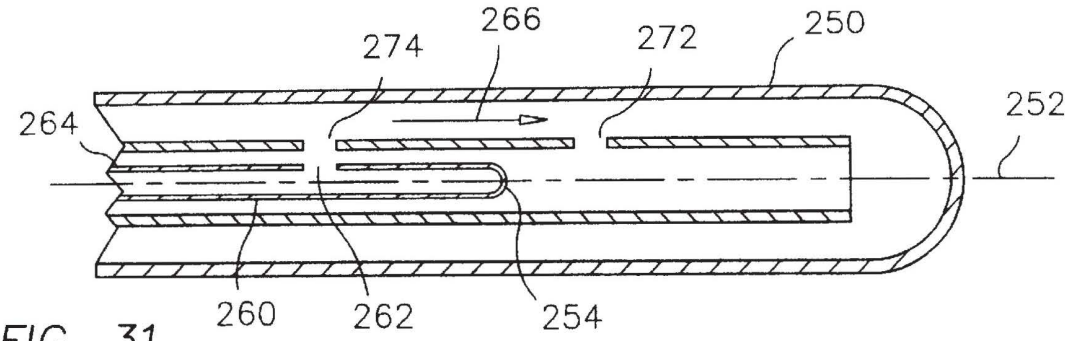

FIG. 31

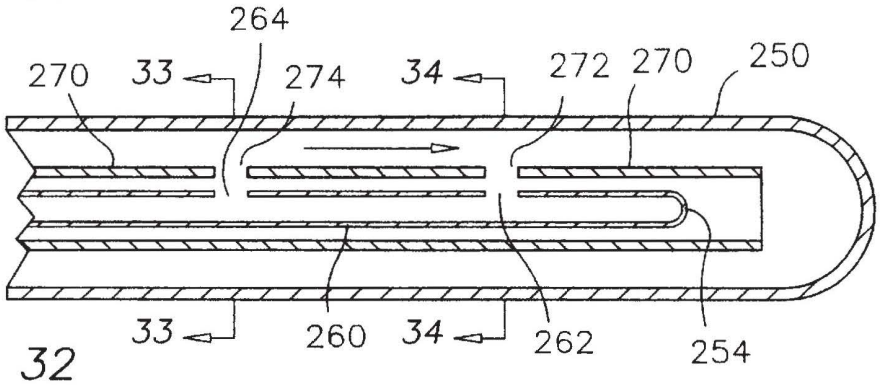

FIG. 32

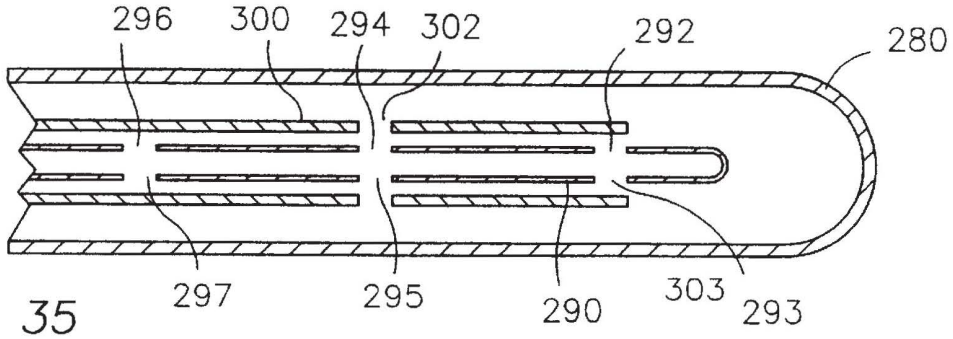

FIG. 35

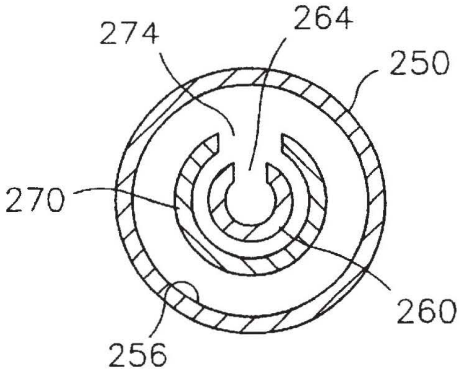

FIG. 33

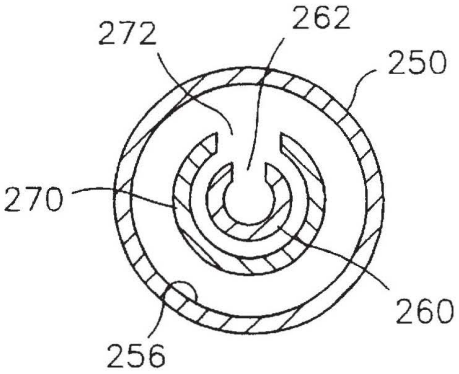

FIG. 34

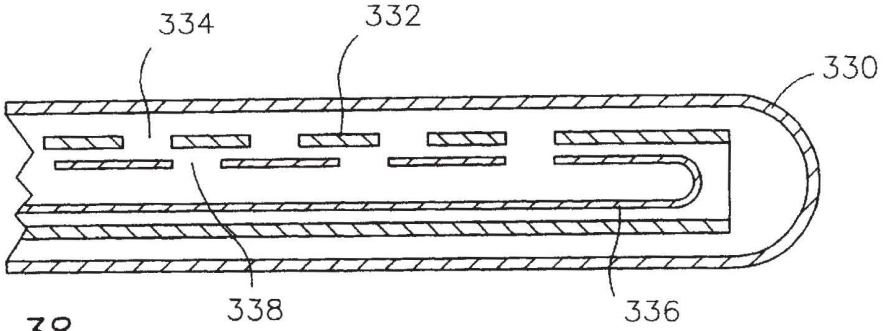

FIG. 38

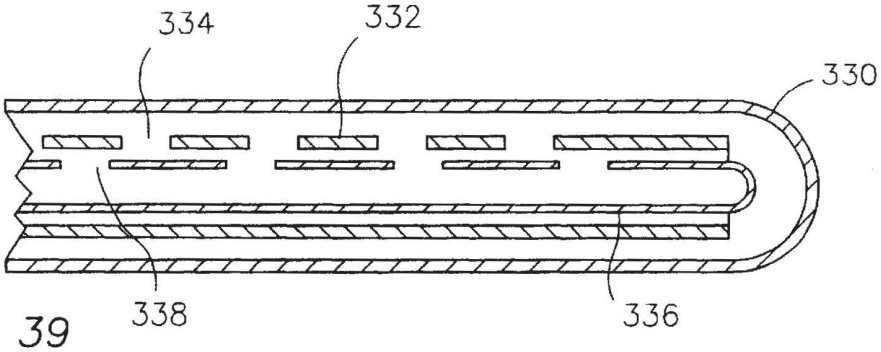

FIG. 39

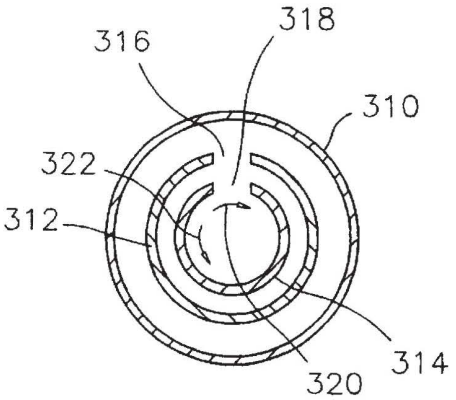

FIG. 36

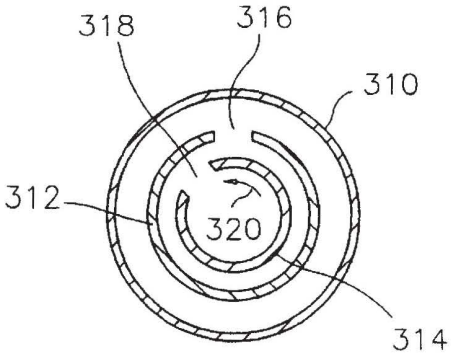

FIG. 37

CRYOSURGICAL CATHETER

CROSS-REFERENCE TO RELATED APPLICATIONS

This application is a continuation of U.S. patent application Ser. No. 09/845,535, filed Apr. 30, 2001, which is a continuation of U.S. patent application Ser. No. 09/201,071, filed Nov. 30, 1998, now issued U.S. Pat. No. 6,235,019, which is a continuation-in-Part of U.S. patent application Ser. No. 08/893,825, filed Jul. 11, 1997, now issued U.S. Pat. No. 5,899,899, which is a continuation-in-part of U.S. patent application Ser. No. 08/807,382, filed Jan. 27, 1997, now issued U.S. Pat. No. 5,899,898.

STATEMENT REGARDING FEDERALLY SPONSORED RESEARCH

Not Applicable

FIELD OF THE INVENTION

The invention relates to catheters, and more particularly to cryosurgical catheters used for tissue ablation.

BACKGROUND OF THE INVENTION

Many medical procedures are performed using minimally invasive surgical techniques, wherein one or more slender implements are inserted through one or more small incisions into a patient's body. With respect to ablation, the surgical implement can include a rigid or flexible structure having an ablation device at or near its distal end that is placed adjacent to the tissue to be ablated. Radio frequency energy, microwave energy, laser energy, extreme heat, and extreme cold can be provided by the ablation device to kill the tissue.

With respect to cardiac procedures, a cardiac arrhythmia can be treated through selective ablation of cardiac tissue to eliminate the source of the arrhythmia. A popular minimally invasive procedure, radio frequency (RF) catheter ablation, includes a preliminary step of conventional electrocardiographic mapping followed by the creation of one or more ablated regions (lesions) in the cardiac tissue using RF energy. Multiple lesions are frequently required because the effectiveness of each of the proposed lesion sites cannot be predetermined due to limitations of conventional electrocardiographic mapping. Often, five lesions, and sometimes as many as twenty lesions may be required before a successful result is attained. Usually only one of the lesions is actually effective; the other lesions result in unnecessarily destroyed cardiac tissue.

Deficiencies of radio frequency ablation devices and techniques have been overcome by using cold to do zero degree or ice mapping prior to creating lesions, as taught in U.S. Pat. Nos. 5,423,807; and 5,281,213; and 5,281,215. However, even though combined cryogenic mapping and ablation devices permit greater certainty and less tissue damage than RF devices and techniques, both the cryogenic and the RF devices are configured for spot or roughly circular tissue ablation.

Spot tissue ablation is acceptable for certain procedures. However, other procedures can be more therapeutically effective if multiple spot lesions along a predetermined line, or a single elongate or linear lesion is created in a single ablative step. Radio frequency ablation devices are known to be able to create linear lesions by dragging the ablation tip along a line while it is active. However, no cryogenic devices are known that are optimized for, or which are even minimally capable of, creating an elongate lesion.

SUMMARY OF THE INVENTION

The present invention provides a cryogenic catheter having an elongate outer member and a plurality of inner members disposed within the elongate outer member. The inner members have a plurality of controllable openings formed thereon for the selective release of cryogenic fluid. A plurality of electrode members are disposed on an external surface of the outer member. The inner members may be positioned in a staggered configuration or alternatively at least one inner member may be disposed within another inner member. In such a configuration, one of the inner members may be slidable or rotatable to the other.

BRIEF DESCRIPTION OF THE DRAWINGS

A more complete understanding of the present invention and the attendant advantages and features thereof will be more readily understood by reference to the following detailed description when considered in conjunction with the accompanying drawings wherein:

FIG. **1** is a schematic illustration of an embodiment of a cryosurgical system in accordance with the invention;

FIG. **2** is a schematic depiction of the chambers of the heart showing placement of the catheter of FIG. **1**;

FIG. **3** illustrates the tip region of one embodiment of the catheter in accordance with the invention;

FIG. **4** illustrates an alternative embodiment of the catheter of FIG. **3**;

FIG. **5** illustrates yet another embodiment of the catheter;

FIG. **6** illustrates a deformable tip for a catheter;

FIG. **7** illustrates yet another embodiment of the catheter;

FIG. **8** is a sectional view of the catheter of FIG. **7** taken along line **8—8**;

FIG. **9** is a sectional view of an alternative embodiment of the linear ablation catheter illustrated in FIG. **7**;

FIG. **10** illustrates an expansion chamber within a portion of a helical coil;

FIG. **11** illustrates a portion of a catheter having an elongate, thermally-transmissive strip;

FIG. **12** is a sectional view of the catheter of FIG. **3** taken along line **12—12**;

FIG. **13** is a sectional view of the catheter of FIG. **3** taken along line **13—13**;

FIGS. **14–16** are sectional views of additional catheter embodiments;

FIG. **17** illustrates an inner face of a flexible catheter member;

FIG. **18** depicts yet another embodiment of a catheter in accordance with the invention;

FIG. **19** is a table illustrating cooling performance of a catheter in accordance with the invention;

FIG. **20** is a sectional view of another catheter embodiment;

FIG. **21** is a sectional view of a portion of the catheter of FIG. **20**;

FIG. **22** is a detailed view of an area of the catheter portion illustrated in FIG. **21**;

FIG. **23** is an illustration of yet another catheter embodiment;

FIG. **24** depicts still another catheter embodiment;

FIG. **25** illustrates yet another embodiment of the catheter;

FIG. **26** is a sectional view of the catheter of FIG. **25** taken along line **26—26**;

FIG. **27** illustrates yet still another embodiment of the catheter;

FIG. **28** illustrates the catheter of FIG. **27** in a second configuration;

FIG. **29** is a sectional view of the catheter of FIG. **28** taken along line **29**—**29**;

FIG. **30** is a sectional view of the catheter of FIG. **28** taken along line **30**—**30**;

FIG. **31** illustrates yet another embodiment of the catheter;

FIG. **32** illustrates the catheter of FIG. **31** in a second configuration;

FIG. **33** is a sectional view of the catheter of FIG. **32** taken along line **33**—**33**;

FIG. **34** is a sectional view of the catheter of FIG. **32** taken along line **34**—**34**;

FIG. **35** illustrates yet another embodiment of the catheter;

FIG. **36** is a sectional view of yet another embodiment of the catheter;

FIG. **37** is a sectional view of the catheter of FIG. **36** after rotation;

FIG. **38** illustrates yet another embodiment of the catheter; and

FIG. **39** illustrates the catheter of FIG. **38** in a second configuration.

DETAILED DESCRIPTION OF THE INVENTION

FIG. **1** is a schematic illustration of a cryosurgical system in accordance with the invention. The system includes a supply of cryogenic or cooling fluid **10** in communication with the proximal end **12** of a flexible catheter **14**. A fluid controller **16** is interposed or in-line between the cryogenic fluid supply **10** and the catheter **14** for regulating the flow of cryogenic fluid into the catheter in response to a controller command. Controller commands can include programmed instructions, sensor signals, and manual user input. For example, the fluid controller **16** can be programmed or configured to increase and decrease the pressure of the fluid by predetermined pressure increments over predetermined time intervals. In another exemplary embodiment, the fluid controller **16** can be responsive to input from a foot pedal **18** to permit flow of the cryogenic fluid into the catheter **14**. One or more temperature sensors **20** in electrical communication with the controller **16** can be provided to regulate or terminate the flow of cryogenic fluid into the catheter **14** when a predetermined temperature at a selected point or points on or within the catheter is/are obtained. For example a temperature sensor can be placed at a point proximate the distal end **22** of the catheter and other temperature sensors **20** can be placed at spaced intervals between the distal end of the catheter and another point that is between the distal end and the proximal end.

The cryogenic fluid can be in a liquid or a gas state. An extremely low temperature can be achieved within the catheter, and more particularly on the surface of the catheter by cooling the fluid to a predetermined temperature prior to its introduction into the catheter, by allowing a liquid state cryogenic fluid to boil or vaporize, or by allowing a gas state cryogenic fluid to expand. Exemplary liquids include chlorodifluoromethane, polydimethylsiloxane, ethyl alcohol, HFC's such as AZ-20 (a 50–50 mixture of difluoromethane & pentafluoroethane sold by Allied Signal), and CFC's such as DuPont's Freon. Exemplary gasses include nitrous oxide, and carbon dioxide.

The catheter **14** includes a flexible member **24** having a thermally-transmissive region **26** and a fluid path through the flexible member to the thermally-transmissive region. A fluid path is also provided from the thermally-transmissive region to a point external to the catheter, such as the proximal end **12**. Although described in greater detail below, exemplary fluid paths can be one or more channels defined by the flexible member **24**, and/or by one or more additional flexible members that are internal to the first flexible member **24**. Also, even though many materials and structures can be thermally conductive or thermally transmissive if chilled to a very low temperature and/or cold soaked, as used herein, a "thermally-transmissive region" is intended to broadly encompass any structure or region of the catheter **14** that readily conducts heat.

For example, a metal structure exposed (directly or indirectly) to the cryogenic fluid path is considered a thermally-transmissive region **26** even if an adjacent polymeric or latex catheter portion also permits heat transfer, but to a much lesser extent than the metal. Thus, the thermally-transmissive region **26** can be viewed as a relative term to compare the heat transfer characteristics of different catheter regions or structures.

Furthermore, while the thermally-transmissive region **26** can include a single, continuous, and uninterrupted surface or structure, it can also include multiple, discrete, thermally-transmissive structures that collectively define a thermally-transmissive region that is elongate or linear. Depending on the ability of the cryogenic system, or portions thereof, to handle given thermal loads, the ablation of an elongate tissue path can be performed in a single or multiple cycle process without having to relocate the catheter one or more times or drag it across tissue. Additional details of the thermally-transmissive region **26** and the thermal transfer process are described in greater detail below.

In exemplary embodiments of the invention, the thermally-transmissive region **26** of the catheter **14** is deformable. An exemplary deformation is from a linear configuration to an arcuate configuration and is accomplished using mechanical and/or electrical devices known to those skilled in the art. For example, a wall portion of the flexible member **24** can include a metal braid to make the catheter torqueable for overall catheter steering and placement. Additionally, a cord, wire or cable can be incorporated with, or inserted into, the catheter for deformation of the thermally transmissive region **26**.

The cryogenic system of FIG. **1** is better understood with reference to its use in an operative procedure as shown in FIG. **2**. Following the determination of a proposed lesion site within a heart chamber **28**, for example, the catheter **14** is directed through a blood vessel **30** to a region within the heart; such as an atrial or ventricular chamber, where the lesion will be made. The thermally-transmissive region **26** is placed proximate to the tissue to be ablated. The thermally-transmissive region of the catheter may be deformed to conform to the curvature of the tissue before, during, or after placement against the tissue. The controller **16** allows or causes cryogenic fluid to flow from the cryogenic fluid supply **10** to the fluid path in the catheter **14** and thence to the thermally-transmissive region **26** to ablate the desired area or to cold map along the same tissue area. In one embodiment (e.g., FIG. **12**) a first conduit is concentric within a second conduit and cooling fluid travels to a thermally-transmissive region proximate a closed distal end

of the catheter through a first conduit (fluid path) and is exhausted from the catheter through the second conduit (fluid path).

Having described the function of the cryogenic catheter **14** and its use in a system context, several exemplary embodiments of the thermally-transmissive region **26** of the catheter are now described in greater detail. FIGS. **3**, **4**, **5**, **12–16** and **18** illustrate embodiments of the catheter, or portions thereof, having two or more thermally-transmissive segments in a spaced-apart relationship. Each of the illustrated catheters includes a closed tip **32** that can include a thermally-transmissive material.

Referring specifically to the embodiment depicted in FIG. **3**, multiple thermally-transmissive elements **34** are integral with a distal portion of a catheter. Each of the thermally-transmissive elements **34** includes a first side or face **36** (shown in FIGS. **12** and **13**) exposed to a cryogenic fluid path and cryogenic fluid (shown by arrows) and a second side or face **38** exposed to points exterior to the catheter. As shown in FIG. **13**, the first side **36** and/or second side **38** of any or all of the thermally-transmissive elements **34** can be substantially flush with, recessed below, or protruding from the inner surface **40** and outer surface **42** of a portion of the catheter. The thermally-transmissive elements **34** are separated by flexible portions of material **44** than can range from slightly less thermally-transmissive than the adjacent thermally-transmissive elements to substantially less thermally-transmissive than the adjacent elements. In the illustrated embodiment of FIG. **3**, the thermally-transmissive elements **34** are annular, cylindrical elements which are made of gold-plated copper or bronze. Thermocouples **35** can be associated with one or more of the elements **34** and the tip **32**. The thermally-transmissive elements **34** can be completely exposed, embedded, or a combination thereof along the full 360° of the catheter's circumference. In certain applications the thermally-transmissive elements traverse or define less than 360° of the catheter's circumference as shown in FIGS. **14–16** and as described below. The longitudinal width of each thermally-transmissive element **34**, the spacing between elements, the material thickness, and the material composition are matched with a selected cryogenic fluid, one or more cryogenic fluid delivery locations within the catheter and fluid delivery pressure to produce overlapping cold regions which produce a linear lesion.

The embodiment illustrated in FIG. **4** is substantially identical to the embodiment of FIG. **3**, however, at least one of the thermally-transmissive elements **34** includes a first open end **46** that defines a first plane and a second open end **48** that defines a second plane, wherein the first and second planes intersect to give the annular elements a wedge-like appearance. Such a configuration permits adjacent thermally-transmissive elements **34** to be positioned very closely together, but it can limit the possibilities for deforming the thermally-transmissive region **26**, which, in this embodiment, is flexible in the direction indicated by the arrow.

With respect to the embodiments shown in both FIGS. **3** and **4**, the thermally-transmissive elements **34** are substantially rigid and are separated and/or joined by a flexible material **44**. However, in other embodiments the thermally-transmissive elements **34** are flexible and are interdigitated with either rigid or flexible segments. FIG. **5**, for example, illustrates an embodiment of the cryogenic catheter having three thermally-transmissive elements **34** that are flexible. The flexibility is provided by a folded or bellows-like structure **50**. In addition to being shapable, a metal bellows can have enough stiffness to retain a selected shape after a deforming or bending step.

Instead of, or in addition to, flexible, thermally-transmissive elements **34** and/or flexible material **44** between elements, the distal tip **32** (or a portion thereof) can be deformable. For example, FIG. **6** illustrates a tip **32** having thermally-transmissive, flexible, bellows **50**.

Referring now to FIGS. **7–10**, a different approach is shown for providing multiple thermally-transmissive segments in a spaced-apart relationship. FIG. **7** illustrates a catheter embodiment having an elongate, thermally-transmissive region **26** that includes a helical coil **52** at least partially embedded in the flexible member **24**. As shown in FIG. **8**, at least a first portion **54** of the helical coil **52** is exposed to a fluid path within the flexible member **24** and a second portion **56** of the helical coil is exposed to the exterior of the flexible member. As described above with respect to FIG. **13**, the first portion **54** of the coil can be substantially flush with, recessed below, or protruding from an inner surface **58** of the flexible member **24**. Similarly, the second portion **56** of the coil **52** can be substantially flush with, recessed below, or protruding from an outer surface **60** of the flexible member **24**.

In the embodiment of FIG. **8**, the second portion **56** of the coil **52** is exposed along only a portion of the outer circumference of the flexible member **24** to define a longitudinally-elongate, thermally-transmissive region **26**. This configuration can be provided by eccentrically mating the helical coil **52** to the catheter so that the longitudinal axis of the coil and the longitudinal axis of the catheter are substantially parallel. The eccentric positioning of the coil **52** provides excellent cooling performance because the surface area available for thermal exchange between the first portion **54** of coil and the cryogenic fluid is greater than the surface area available for thermal exchange between the second portion **56** of the coil and adjacent tissue where cooling power is delivered by each exposed coil portion to provide a linear lesion.

Referring now to FIG. **9**, an alternative embodiment is shown wherein a first portion **62** of the coil **52** is exposed around the entire circumference of the flexible member **24**, and a second portion **64** is exposed to a fluid path around the inner surface of the flexible member **24**. This is achieved by having the longitudinal axis of the helical coil **52** co-axial with the longitudinal axis of the catheter.

In the embodiments illustrated in FIGS. **7–9**, the coil **52** is solid. However, in other embodiments the coil can be an elongate, hollow, gas expansion chamber. For example, FIG. **10** illustrates a portion of a helical coil **52** that includes a passage that defines at least a portion of a fluid path through a flexible member of the catheter. The coil **52** defines a first fluid path diameter at a fluid entry point **66** and a second fluid path diameter that is greater than the first fluid path diameter at a gas expansion or boiling location **68**. Gas escaping from a fluid exit point **70** can be exhausted through an open central region of the coil and/or another passage through the flexible member **24**.

FIG. **11** illustrates an embodiment of the catheter wherein a continuous, elongate, thermally-transmissive strip **72** is longitudinally integrated with a flexible member **24**. The strip can include a bellows-like structure. As described above with respect to other embodiments, a first portion of the strip can be substantially flush with, recessed below, or protrude from the outer surface of the flexible member. Similarly, a second portion of the strip can be substantially flush with, recessed below, or protrude from an inner surface of the flexible member.

Referring now to FIG. **12**, an embodiment of the catheter is illustrated having a second or inner flexible member **74** within a lumen of first or outer flexible member **24**, wherein the second flexible member defines a fluid path to the thermally-transmissive region **26**. The inner member **74** can include a single opening **76** at or near the tip **32**. Cryogenic fluid is expelled from the opening **76** and returns to the proximal end of the catheter along a fluid path defined by the outer wall of the inner member **74** and the inner wall of the outer member **24**. This fluid path configuration is also partially illustrated in FIGS. **8**, **9**, and **13**. Alternatively, as also shown in FIG. **12**, the inner member **74** can be provided with multiple openings **78** proximate to and/or aligned with the inner face of one or more thermally-transmissive elements **34** to achieve more uniform cooling across the entire elongate, thermally-transmissive region **26**.

Referring now to FIGS. **14–16**, sectional views of catheter embodiments are illustrated to show alternative configurations for thermally-transmissive elements. The previously described thermally-transmissive elements **34** are arcuate and form complete and continuous 360 degree structures that traverse the complete circumference of the catheter, notwithstanding being flush with, depressed below, or raised above the outermost surface of the flexible member **24**. However, the arcuate elements **34'**, **34"**, and **34'"** illustrated in FIGS. **14–16**, respectively, traverse less than 360 degrees of the circumference of the first flexible member and do not form complete loops. For example, in FIG. **14**, element **34'** defines an approximately 270 degree arc. In FIG. **15** the thermally-transmissive element **34"** defines an approximately 180 degree arc; and in FIG. **16**, the thermally-transmissive element **34'"** defines an approximately 90 degree arc. A catheter can include combinations of element types, such as a complete ring or loop element, a 270 degree element and a 180 degree element as desired to define a thermally transmissive region. In addition to the having applicability with respect to rigid thermally-transmissive elements, the bellows-like elements can also be less than 360 degrees.

The less than 360 degree arcuate elements provide unique functional benefits with respect to thermal transfer and flexibility of the thermally-transmissive region. For example, because the portion of the catheter between the opposing ends of element **34'**, **34"**, **34'"** does not include a rigid structure, but rather only the resilient material of flexible member **24**, the thermally-transmissive region of the catheter can be more tightly curved (gap between ends inward and element facing outward) than it could with complete 360 degree structures, especially if the elements are relatively long longitudinally.

The inner member **74** can be adapted to direct cooling fluid at only the thermally transmissive element(s) and the shape and/or the number of openings for cooling fluid can be configured differently depending on the length of the arc defined by the thermally-transmissive element(s). For example, FIG. **14** illustrates an embodiment of the inner member having three openings opposing the thermally transmissive element **34'**; FIG. **15** illustrates two openings for a smaller arc; and FIG. **16** discloses a single opening for an even smaller arc.

Another advantage to providing one or more thermally-transmissive elements that have a less than 360 degree configuration is that limiting the span of the elements to a desired lesion width, or somewhat greater than a desired lesion width, reduces the thermal load on the system and/or permits colder temperatures to be achieved than with respect to a complete 360 degree structure. Unnecessary and perhaps undesirable cooling does not occur at any other location along the catheter except at an elongate region of predetermined width. A similar effect can also be achieved by providing a non-circular 360 degree element or by eccentrically mounting a circular 360 degree element with respect to the flexible member, wherein a portion of the 360 degree element is embedded within the wall of the flexible member or otherwise insulated from the cryogenic fluid path in a manner similar to that shown in FIG. **8**.

Referring now to FIG. **17**, a portion of the inner face of an outer flexible member showing in an exemplary embodiment, thermal transfer pins **80** protruding from the inner face of a thermally-transmissive element **34**. The pins permit thermal transfer through the flexible member **24**. As with the other features of the invention, the pins are equally suitable for complete 360 degree element structures or less than 360 degree structures. Although only pins are shown on any geometric or surface means to increase heat transfer including but not limited to pins, irregularities, channels or surface modifications may be used.

Referring now to FIG. **18**, yet another embodiment of the catheter is shown wherein rigid metal rings **34***a–c* are interdigitated with flexible segments **44***a–c* to define a first flexible member and a thermally-transmissive region approximately one inch in length. A second flexible member is concentric within the first flexible member and has an outlet for cryogenic fluid at its distal end. Thermocouples **82***a–c* can be associated with one or more of the rings **34***a–c*.

It has been described above how the thermal loading of a cooling system can be reduced by providing thermally-transmissive elements that span less than 360 degrees. However, the thermal loading can also be reduced by sequentially cooling the thermally-transmissive region. One way to sequentially cool is to modulate the pressure of the cooling fluid along the fluid path through the flexible member. This modulation can be performed by the fluid controller which can be programmed to increase and decrease the pressure of the fluid by predetermined pressure increments over predetermined time intervals. When the cryogenic fluid is a liquid that provides cooling by changing phase from liquid to gas, the change of pressure alters the physical location along the fluid path where the phase change takes place and concomitantly changes the point of coldest temperature along the thermally-transmissive region. Thus, varying the pressure of the fluid can provide a moving ice-formation "front" along the catheter, enabling the creation of a linear lesion.

Therefore, a method of forming an elongate tissue lesion can include the following steps using any of the above described catheters having an elongate, thermally-transmissive region. In a first step a cryogenic fluid is introduced into the flexible member at a first predetermined pressure. Next, the pressure of the cryogenic fluid is incrementally increased within the flexible member until a second predetermined pressure is achieved. Similarly, the pressure of the cryogenic fluid within the flexible member can be decreased incrementally from the second predetermined pressure to the first predetermined pressure, wherein the steps of incrementally increasing and decreasing the pressure define a thermal cycle. Typically, from one to eight thermal cycles are required to achieve a desired therapeutic effect. In an exemplary method, about ten increments of about five seconds in duration are selected and pressure is increased by about 20 to 40 pounds per square inch in each increment. Thus, using this method an elongate lesion can be created in less than 20 minutes.

FIG. **19** is a table that illustrates sequential cooling in a catheter as described above having a thermally-transmissive

region that includes a tip and three elements or rings. The table illustrates three tests conducted in a still bath at 37° C., using AZ-20 as the cryogenic fluid. Associated with each pressure increment are measured temperatures at the tip, first ring, second ring, and third ring. The shaded region illustrates the sequential movement of a target temperature range (upper −40's to low −50's) in response to a change in pressure. Although values are only provided for three rings, a similar effect and pattern is obtained with more than three rings or elements.

Turning now to FIG. **20**, a thermally-transmissive portion of another embodiment of a medical device or structure such as a catheter is illustrated in a sectional view. The structure can include an inner passage or lumen as described above with respect to other embodiments, but which is not shown in this illustration for purposes of clarity. Thus, the illustrated portion is the outer passage or lumen that defines an elongate ablation region. Thermally-transmissive elements **84**, such as gold plated copper, are joined to adjacent elements by resilient connecting elements **86**, such as a stainless steel springs welded to the ends of the elements **84**. A resilient bio-compatible material **88** covers the connecting elements **86** and the interstices between adjacent thermally-transmissive elements. In an exemplary embodiment, the material **88** is vulcanized silicone. It should be noted in the illustration that the surface of the elements **84** is contiguous and co-planar with the material **88** to provide a smooth outer surface.

FIG. **21** illustrates a single thermally-transmissive element **84** having reduced diameter ends **90** and **92**. The wider central portion **94** provides an expansion chamber for gas (shown by arrows) exiting an apertured inner passage **96**. FIG. **22** shows additional detail of the end **90** of the element **84**. The end **90** is textured, such as by providing serrations **98**, to provide a good adhesion surface for the material **88**.

Referring now to FIG. **23**, a thermally-transmissive portion of yet another embodiment of a flexible cryogenic structure is illustrated in a sectional view. In this embodiment an inner, apertured structure **100** has a flat wire **102** wrapped around it in a spiral manner. Thermally-transmissive segments **104** are disposed upon the wire **102** in a spaced-apart relationship, and a flexible, bio-compatible material **106** fills the interstices between segments **104**. A thermocouple **108** can be associated with each segment **104**. A wire **109** connects the thermocouple **108** to instrumentation near the proximal end of the structure. The exterior surface of the structure is smooth, and the structure can include 3 to 12 segments **104**. In an exemplary embodiment the inner structure **100** is made of PTFE, the material **106** is 33 D Pebax, and the wire **102** is stainless steel or Nitinol. An apertured inner passage (similar to that shown in FIG. **21**) is placed within the structure.

FIG. **24** illustrates still another embodiment of a cryogenic cooling structure that includes a surface or wall **110** including a polymer or elastomer that is thin enough to permit thermal transfer. For example, polyamide, PET, or PTFE having a thickness of a typical angioplasty balloon or less (below 0.006 inches) provides acceptable thermal transfer. However, the thinness of the wall **110** allows it to readily collapse or otherwise deform under vacuum or near vacuum conditions applied to evacuate fluid/gas from the structure. Accordingly, the structure is provided with one or more supporting elements **112** such as a spring. The cooling structure is illustrated in association with a catheter **114** having a closed distal tip **116** and mono or bipolar ECG rings **118**, **120**, **122**. The thermally-transmissive region is approximately 30 mm in length and is effective for thermal transfer over its entire circumference. However, as illustrated in FIG. **11**, the thermally-transmissive region can be confined to specific region(s) of the device's circumference.

Referring now to FIG. **25**, an embodiment of the catheter is illustrated having three flexible members or injection tubes **210**, **211** and **212** disposed within a first or outer flexible member **200**. In an exemplary embodiment, the inner flexible members **210**, **211** and **212** are arranged in a staggered configuration within the outer flexible member **200**. As used herein, term "staggered" may be used to designate both a linearly/axially staggered configuration or alternatively, a rotationally staggered configuration. The flexible members **210**, **211** and **212** thus define multiple staggered fluid paths within the outer member **200**. In such a configuration, the injection tubes **210**, **211** and **212** allow for greater aggregate cooling power as well as the creation of a variety of different cooling/freeze zones **201**, **203** and **205** along the length of the outer flexible member **200**. In an exemplary embodiment, thermocouples **204** disposed along the outer surface of the outer flexible member **200** may be integrated with an internal feedback loop to provide independent and variable regulation of these freeze zones.

In an exemplary embodiment, the first inner member **210** includes at least one opening **214** positioned proximate an electrode ring member **207**. Cryogenic fluid is expelled from the opening **214** and returns to the proximal end of the catheter along a fluid path defined by the inner wall **218** of the outer member **200**, as shown in FIG. **26**. Similarly, the second inner member **211** includes at least one opening **215** positioned proximate a second electrode ring member **208**. Cryogenic fluid is also expelled from the opening **215** and returns to the proximal end of the catheter along the fluid path defined by the inner wall **218** of the outer member **200**. Similarly, the third inner member **212** includes at least one opening **216** positioned proximate a third electrode ring member **209**.

Alternatively, the catheter can be provided with only two inner members, or four or more inner members, not shown, disposed within the outer member. The inner members would have one or more openings proximate to and/or aligned with the inner face of one or more transmissive elements, as described earlier herein, to achieve different regions of freeze zones across the entire elongate member. Alternatively, all the staggered inner members may be simultaneously provided with cryogenic fluid to create a linear lesion for selected applications. The flow of cooling fluid along the fluid paths through the flexible members can also be alternated in any number of patterns among the multiple inner members to provide a desired cooling pattern such as a discontinuous or a continuous lesion across the entire catheter.

In an exemplary embodiment, a catheter with a plurality of thermally conductive electrode rings would have an underlying injection tube or tubes controlling the release of cryogenic fluid to each electrode. Such a catheter could be placed in the coronary sinus or endocardially along the atrioventricular junction. Once positioned, an electrogram of interest is located using a specific electrode ring on the catheter. Coldmapping may be performed on the selected location to confirm the correctness of the location. Once, confirmed, the area is cryoablated using the same electrode ring. The same embodiments and others described herein are equally suited to other organs besides the heart and/or any body portion that would benefit from the application of thermal energy.

Referring now to FIG. **27**, an embodiment of the catheter is illustrated having an outer member **220** with a fixed

injection tube **230** disposed within a slidable sheath or overtube **240** therein. The injection tube and overtube are shown spaced apart for illustrative purposes only. Preferably, the injection tube is sized so that an outer surface of the injection tube engages an inner surface of the overtube while still allowing one member to slide or rotate relative to the other.

The fixed injection tube **230** has multiple openings **232**, **234** formed thereon and the slidable overtube also has multiple openings or ports **242**, **244** formed thereon. In one configuration shown in FIG. **27**, opening **232** on the injection tube **230** coincides or is aligned with opening **242** on the slidable overtube **240**. Thus, any fluid exiting the injection tube **230** from opening **232** is able to escape through opening **242**.

As the slidable overtube **240** is slid or moved in a first direction as shown by arrow **236** along longitudinal axis **222**, opening **232** is covered or blocked by the surface of overtube **240** as now shown in FIG. **28**. In a second configuration shown in FIG. **29**, opening **234** of injection tube **230** is aligned with opening **244** of overtube **240**. In the same configuration, as shown in FIG. **30**, opening **242** is not aligned with any opening formed on the surface of injection tube **230**. Although only shown in two positions or configurations, the slidable overtube is positionable in any number of positions relative to the fixed injection tube. The overtube may also be used to partially cover the openings on the injection tube to provide for a limited or controlled flow of cryogenic fluid.

Depending on which opening of the injection tube is aligned with the openings formed on the overtube, cryogenic fluid is expelled from the opening and returns to the proximal end of the catheter along a fluid path defined by the inner wall **226** of the outer member **220**. The non-aligned opening will not expel fluid since the opening will be blocked. Alternatively, the injection tube and overtube can be provided with three or more openings to achieve multiple cooling/freeze zones along the length of the catheter.

Referring now to FIG. **31**, an embodiment of the catheter is illustrated having a slidable injection tube **260** disposed within a fixed sheath or overtube **270**. As shown in FIG. **31**, both the injection tube **260** and overtube **270** are disposed within a flexible outer member **250**. The slidable injection tube **260** has multiple openings **262**, **264** formed thereon which allows for the release of cryogenic fluid. The fixed overtube **270** also has multiple perforations or openings **272**, **274** formed thereon which allows for the differential release of fluid as described in more detail below. The injection tube may be further provided with a thermistor **254** disposed proximate the distal end of the tube to provide thermistor feedback. In one embodiment, the openings can be controlled by miniaturized means such as micro or nanovalves.

In a first configuration shown in FIG. **31**, opening **262** of the injection tube **260** coincides or is aligned with opening **274** of the fixed overtube **270**. As the slidable injection tube **260** is slid or moved in a first direction as shown by arrow **266**, opening **262** is then aligned with corresponding opening **272** on the overtube **270** in FIG. **32**.

In this second configuration, as shown in FIGS. **32–34**, openings **262**, **264** of injection tube **260** are aligned with openings **272**, **274** of overtube **270**. Although only two configurations for the catheter are shown, the injection tube **260** is positionable in any number of locations relative to the fixed overtube **270**.

In operation, cryogenic fluid is expelled from the openings and returns to the proximal end of the catheter along a fluid path defined by an inner wall **256** of the outer member **250**. Alternatively, the injection tube **260** and overtube **270** can be provided with multiple openings proximate to and/or aligned with the inner face of one or more thermally-transmissive elements as described earlier herein to achieve more uniform cooling across the entire elongate, thermally-transmissive region.

Referring to FIG. **35**, an embodiment of the catheter is illustrated having an outer member **280** with an injection tube **290** with multiple opposed openings **292–297** formed therein. Either the injection tube **290** or the overtube **300** may be slidable in a longitudinal plane to expose and/or cover one or more of the opposed openings on the injection tube **290**. For example, as shown in FIG. **35**, openings **294**, **295** formed on the injection tube **290** are aligned with openings **302**, **303** formed on the overtube **230**. Furthermore, the injection tube may be positioned in a forwardmost position, not shown, to expose openings on the injection tube proximate the tip of the catheter. In this configuration, the injection tube would provide fluid to cool the area around the tip of the catheter.

In the embodiments described and shown above in FIGS. **32–35**, electrode rings as shown in FIG. **25** may be provided along the outer surface of any of the outer members. The electrodes would serve both as electrical conductors and as a thermal transmitter at each location.

Referring to FIGS. **36** and **37**, an embodiment of the catheter is illustrated have one or more rotatable members disposed within a flexible outer member **310**. In this embodiment, the catheter includes an overtube member **312** and an injection tube member **314**, one or both of which are rotatable with respect to one another. In an exemplary embodiment as shown in FIGS. **36** and **37**, the injection tube **314** is rotatable relative to the fixed overtube **312**. The injection tube **314** may be rotatable in either or both a clockwise and counterclockwise direction as indicated by arrows **320** and **322**. As shown in FIG. **36**, in a first configuration, opening **316** formed on the overtube **312** aligns with an opening **318** formed on the injection tube **314**. As the injection tube **314** is rotated in a counterclockwise direction, the opening **318** on the injection tube **314** is placed out of alignment with the opening **316** formed on overtube **312**, as shown in FIG. **37**. Alternatively, the injection tube **314** may be fixed in the catheter while the overtube **312** is rotatable. In another embodiment, both the injection tube and overtube may both be rotatable. In yet a further embodiment, the injection tube and/or the overtube are rotatable and slidable within the outer member.

In the embodiments shown and described above, the slidable and rotatable inner and outer tubes may have openings so arranged as to allow the fluid releasing openings to be in a variety of open and closed configurations with a minimum of relational movement between the tubes. For example, as shown in FIG. **38**, an outer member **330** has disposed therein one slidably disposed inner tube **336** which has openings **338** formed thereon in a constant sequence, and a matching slidably disposed outer tube **332** which has openings **334** formed thereon in a constant sequence of slightly different length or intervals. In this configuration, as shown in FIG. **39**, small linear relational movements bring the openings on the outer tube **332** and the inner tube **336** into an overlapping configuration.

In addition, the openings as shown and described herein may be so shaped as to allow additional control of fluid release. For example, an outer hole could be tear-shaped and match up with an inner opening that is tear-shaped rotation-

ally aligned 180° oppositely not shown. As the two narrow ends begin to overlap with slidable motion, a tiny aperture is created. With further slidable motion in the same direction, larger areas of the two openings overlap and larger volumes of cryogenic fluid can be released.

A variety of modifications and variations of the present invention are possible in light of the above teachings. Specifically, although many embodiments are illustrated being slender and flexible, other embodiments may be thick and rigid, and introduced into the body directly through incisions or through structures such as trocars. The opening and closing of the catheter openings may also be controlled by using nanotechnology and miniaturized valving. Furthermore, although some of the illustrated devices are particularly well suited for cardiac procedures, the same embodiments and others are equally suited to other organs and/or any body portion that would benefit from the application of thermal energy. For example, the illustrated devices may be used for treating arteries for restenosis or portions of the GI tract to stop bleeding or portions of the GU tract to treat spasm, inflammation, obstruction or malignancy. Thus, the devices as shown are not to be limited to catheters but should be viewed more broadly as cryogenic structures or portions thereof. It is therefore understood that, within the scope of the appended claims, the present invention may be practiced otherwise than as specifically described hereinabove. All references cited herein are expressly incorporated by reference in their entirety.

What is claimed is:

1. A medical device comprising:

an elongate member having a bellows-shaped, thermally-transmissive region; and

a refrigerant path through the elongate member to the bellows-shaped, thermally-transmissive region,

wherein the elongate member includes a proximal portion and a distal portion, and wherein the distal portion includes the bellows- shaped, thermally-transmissive region,

wherein the proximal portion includes an elongated catheter, and

wherein the bellows-shaped, thermally transmissive region retains a selected shape after being bent.

2. A medical device comprising:

an elongate member having a bellows-shaped, thermally-transmissive region; and a refrigerant path through the elongate member to the bellows-shaped, thermally-transmissive region, further comprising a supply of pressurized refrigerant in fluid communication with the refrigerant path.

3. The medical device of claim **2**, therein the bellows-shaped, thermally-transmissive region is flexible.

4. The medical device of claim **2**, wherein the bellows-shaped, thermally-transmissive region is made of metal.

5. The medical device of claim **2**, wherein the refrigerant path through the elongate member includes an inner member disposed within the elongate member.

6. The medical device of claim **2**, wherein the elongate member includes a second bellows-shaped, thermally-transmissive region.

7. A medical device comprising:

an elongate member having a bellows-shaped, thermally-transmissive region; and a refrigerant path through the elongate member to the bellows-shaped, thermally-transmissive region, wherein the bellows-shaped, thermally-transmissive region retains a selected shape after being bent.

* * * * *