[19] Intellectual Property Office of the People's Republic of China

[51] Int. CL
***A47L9/16* (2006. 01)**

[12] Invention Patent Application Publication

[21] Application Number: 200610077262.3

[43] Publication Date: October 31, 2007

[11] Publication Number: CN101061932A

[22] Application Date: April 28, 2006
[21] Application Number: 200610077262. 3
[71] Applicant: Kwonnie Electrical Products Limited
Address: Kowloon, Hong Kong, China
[72] Inventor: He Jianan

[74] Patent Agency: Science Patent and Trademark Agency Co., Ltd.
Agent: Liu Xiaofeng

Claims 1 page, Description 10 pages, Drawings 8 pages

[54] Name of Invention

Cyclone Handheld Vacuum Cleaner

[57] Abstract

The rechargeable handheld vacuum cleaner related to the present invention has a detachable dust cup part. The dust cup part includes two parallel cyclones and two dust collection chambers. The dust collection chamber is connected to the cyclone body through the dust release hole. Adoption of the design of two parallel cyclones enables the use of smaller cyclones, which will not affect the air performance and at the same time achieve better dust separation performance. Moreover, there is neither a filter nor a dust collection chamber inside the cyclone body. This enables the dust collection chamber to be cleaned in a more convenient and hygienic way. The use of two parallel cyclones increases the efficiency of the cyclone action, so that only very simple filters are needed to protect the impeller inside the vacuum cleaner. Therefore, based on the above structure, the filter will not gradually become blocked, thereby allowing the suction power to be maintained at a fixed level.

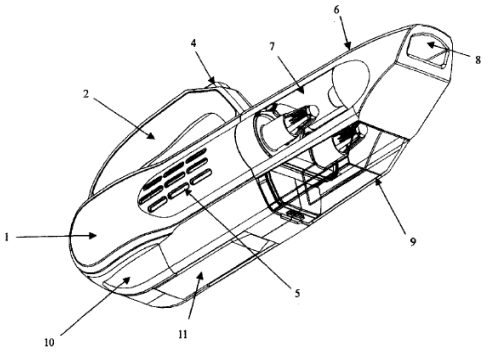

1. A handheld vacuum cleaner, comprising: a main housing; a removable battery cover; a motor connected to the impeller; a funnel-shaped inlet pipe; a removable dust cup part; and a release mechanism for releasing the dust cup part from the main housing, and the handheld vacuum cleaner having the following characteristics: the dust cup part includes an air inlet, an airpath to the cyclone, at least two cyclones arranged parallel to each other, separate dust collection chambers individually connected to cyclones, and an air return pipe connected to the air converging chamber, in which each cyclone has an air return pipe.

2. The handheld vacuum cleaner according to Claim 1, wherein the dust collection chamber has at least one opening for emptying dirt.

3. The handheld vacuum cleaner according to Claim 2, wherein the alternative device in which the dust chamber has at least one opening for emptying dirt is an opening and closing device such as a door or the like.

4. The handheld vacuum cleaner according to Claim 1, wherein the cavity between the top of the separator and the funnel-shaped inlet tube forms an air converging chamber adapted to converge the downstream air paths of a plurality of cyclones.

5. The handheld vacuum cleaner according to Claim 4, wherein the air converging chamber for converging air paths is adapted to accommodate a filter.

6. The handheld vacuum cleaner according to Claim 4, wherein the funnel-shaped inlet tube also forms part of the impeller housing.

7. The handheld vacuum cleaner according to Claim 1, wherein the air return duct having an air converging chamber with a converging downstream air path is removable from the dust cup part.

8. The handheld vacuum cleaner according to Claim 1, wherein the air path leads to the cyclone opening in a bifurcated manner.

9. The handheld vacuum cleaner according to Claim 1, wherein one end of the air return pipe is tapered and has a hole.

Cyclone Handheld Vacuum Cleaner

Technical Field

The present invention relates to a rechargeable handheld vacuum cleaner, and more specifically to a rechargeable handheld vacuum cleaner using a parallel cyclone as a separation device.

Background Art

A typical handheld vacuum cleaner has a motor connected to an impeller, which can be driven by main power or a rechargeable battery. The impeller generates an airflow that passes through the nozzle. Then, it flows through the dust cup and then into the impeller. In the dust cup, most will have a simple filter. The filters are sometimes used in conjunction with the cyclonic movement of the air to separate dirt and dust from the air. Another filter can be placed after the impeller to filter fine dust or carbon dust from the motor before the exhaust gas exits the vacuum cleaner.

One problem with typical handheld vacuum cleaners with a simple filter in the dust cup is that when the filter receives too much dust, it can quickly become clogged, thus reducing the performance of the vacuum cleaner. This requires the user to remove and clean the filter, making it inconvenient for the user. A related problem is that the filter is usually located in the dust cup, and in order to clean the dust cup, the user must first remove the filter from the dust cup. This step often makes the environment dirty and may soil the user's hands, causing hygiene problems.

Another problem with typical handheld vacuum cleaners equipped with a so-called cyclonic action is that the inefficient cyclonic action allows most of the dirt and dust to accumulate above the filter. As the filter becomes clogged with more and more dust, suction power is gradually lost. In such vacuum cleaners, the user still has to remove and clean the filter frequently, thus calling into question the purpose of using a cyclone.

Cyclonic separations are well known in the field. Its use in vacuum cleaners is also known (e.g., in EP 0042723B). The use of a single cyclone upstream and multiple parallel cyclones downstream has also been described in US 3425192. The use of two or more parallel cyclones can bring about less total air resistance and improve cyclonic separation performance. Improved separation performance is based on the principle that, for a given suction source, an air path can be divided into several air paths with smaller cross-sectional areas while maintaining the same overall flow rate. This means that the inner diameter of each individual cyclone can be reduced so that airborne particles experience greater radial acceleration as they rotate through the cyclone. Therefore, compared with using only a single cyclone, using multiple cyclones can separate finer dust from the air. But the particles sucked in by vacuum cleaners vary in size, and the design has practical disadvantages. Some particles that are larger than the air path entering the individual cyclone will become stuck. To overcome this problem, the arrangement in which a single large precyclone followed by multiple smaller parallel cyclones has been used.

A large number of patents have been issued in relation to this subject. EP 0042723 discusses a single cyclone or two cyclones arranged in series. GB 2372435 describes the arrangement of multiple separators, the air paths connecting them, and their relationship to the

outside surface of a vacuum cleaner. WO 00/24519 is another example of describing the characteristics of an air path in a narrower scope.

There are dual cyclone vacuum cleaners on the market, one in upright mode and the other in column mode. Both feature twin cyclones arranged in parallel and without an upstream separator stage. The two cyclones have straight bodies and are connected to separate dust collection chambers. The air inlet to the cyclone is T-shaped, so that the air is divided into two individual air streams and enters the two cyclones tangentially. US3425192 also describes the use of straight and parallel cyclones in the second stage. Therefore, parallel cyclones are known in the art and the present invention is based on related operating principles.

Details of Invention

The technical problem to be solved by the present invention is to provide an improved handheld vacuum cleaner, which mainly includes a housing and a dust cup part, and provides an efficient cyclone effect, a clean and convenient dust removal process, and constant suction performance.

The main housing part consists of two shells, which are held together by fastening devices. The upper part of the housing is a convenient handle that matched with another component to provide a comfortable and soft grip. Set within the shells on both sides are: a motor, which is connected to the impeller; rechargeable battery pack; air inlet part, which is used to guide air from the dust cup part into the impeller; a switch; a release mechanism for releasing the dust cup part; and an electronic component for controlling the device. The air inlet part has a funnel-shaped part that guides air into the center of the impeller. The funnel-shaped part is equipped with a protective rod to prevent the user from contacting the impeller. A removable battery cover attaches to the underside of the main housing to facilitate battery removal for recycling or repair purposes. The bottom part of the main housing has groove for storing accessory tools. Furthermore, the battery cover has slits extending longitudinally along the body, and these slits serve as connecting means to connect accessories, such as handlebar accessories.

The dust cup part consists of a dust cup in which an air inlet nozzle is formed, a cyclone body of cylindrical geometry with two parallel cyclones and separate dust receiving chambers, and a cyclone top including two return ducts parts. The return tube has a tapered end and air inlet slit, forming a rough safety filter cover. Slits may be replaced by or used in conjunction with other options such as mesh or similar filtering devices. The top of the cyclone also has a cavity where the two air return paths converge and is suitable for housing the filter. The filter protects the impeller and motor when sharp or hard objects pass through the cyclone system. The nozzle is shaped to allow accessory tools to be inserted.

For good suction and cyclonic performance, a completely sealed air path is important. Therefore, the main components of the dust cup part, dust cup, and cyclone body are permanently bonded together. The cyclone body and the top of the cyclone also fit closely.

During normal operation, the vacuum cleaner of the present invention operates in the manner described below. The battery pack powers the motor and impeller, and sucks dusty air through the suction nozzle. This air passes through the inlet channel until it reaches the T-shaped double bifurcation, where the air flow is divided into two streams, each air stream being directed tangentially into a cyclone. Within each cyclone, air and dust particles spiral along the cylindrical body, causing dirt particles that are heavier than air to move outward through centrifugal force. There is a hole cutout at the end of the cyclone body. Dust particles escape into the hole cutout

through inertia. At the same time, the cleaned air continues to follow the vortex and enter the return pipe. Dust particles are collected separately in two dust collection chambers, each dust collection chamber is used for a cyclone and is connected to the cyclone body through the hole cutout.
The cleaned air flows along the two return ducts and converges in a cavity downstream of the cyclone behind the cyclone top, which receives a filter. The filter removes any matter from the air that has not been separated by the cyclone and acts as a safety guard for the impeller and motor. The filters are not fine enough to block any tiny particles. The top of the cyclone is connected to the main body via an airtight sealing strip. Cleaned air enters through the funnel-shaped inlet, passes through the impeller, and then enters the body of the vacuum cleaner. In the main housing, the walls surrounding the motor and battery create a long air path that directs air out of the main housing, helping to cool components and reduce noise.

In order to remove the dust cup part for emptying accumulated dust, the user needs to press the button on the front of the handle, which releases the dust cup. The user can remove and empty the dust cup without touching or removing any parts or filters that come into contact with dust. This is an improvement of one aspect of the invention. Another improvement is the efficiency of the cyclone. Since most of the dust collects in a separate dust receiving chamber, there is no need to clean the filter after each use. Further improvements are related to suction performance. Since most dust in the air is cyclone separated rather than filtered, there is basically no clogging of the filter, so users will experience unchanged suction performance.

Explanation of Drawings

The preferred embodiments of the present invention are described in detail below with reference to the accompanying drawings, wherein:

Figure 1 is a perspective view of a handheld vacuum cleaner constructed in accordance with a preferred embodiment with a dust cup part attached to a main housing;

Figure 2a is a perspective view of the dust cup part of the vacuum cleaner;

Figure 2b is a perspective view of the vacuum cleaner of Figure 1 with the dust cup partially separated;

Figure 3 is a side cross-sectional view of the vacuum cleaner in Figure 1;

Figure 4 is another side cross-sectional view of the vacuum cleaner in Figure 1, showing the locking mechanism between the dust cup part and the main housing;

Figure 5 is a side cross-sectional view of the dust cup part of the vacuum cleaner of Figure 2a equipped with a filter and funnel-shaped inlet;

Figure 6 is a top cross-sectional view of the dust cup part of the vacuum cleaner of Figure 2a equipped with a filter and funnel-shaped inlet;

Figure 7 is a perspective view of a vacuum cleaner unit with a floor nozzle and handle attached;

Figure 8 is a traditional cyclone system with the filter installed in the cyclone body.

Ref Sign	English Name
1	main housing
2	handle
3	switch
4	dust cup release button

5	slits
6	dust cup
7	cyclone body
8	air inlet channel opening
9	dust collection chamber
10	battery cover
11	accessories
12	removable pin
13	fixing pin
14	battery pack
15	motor
16	impeller
17	groove
18	filter
19	dust collection chamber sealing strip
20	air inlet channel
21	middle wall
22	filter seal
23	putter
24	hinge
25	dust cup lock
26	spring
27	funnel-shaped inlet
28	switch
29	PCB component
30	cavity
31	cavity
32	filter in front of motor
33	contact surface
34	surface
35	dust collection chamber opening
36	convex surface
37	return pipe
38	return pipe
39	dust
40	cyclone opening
41	cyclone opening
42	vortex
43	vortex
44	cyclone end
45	cyclone end
46	cyclone
47	cyclone
48	return pipe end

49	return pipe end
50	protection rod
51	T-shaped double bifurcation
52	fixing wall
53	slit
54	slit
55	wall
56	end wall
57	end wall
58	tapered end
59	tapered end
60	air converging chamber
61	rod
62	hinge
63	vortex stopper
64	vortex stopper
65	separator top
66	floor nozzle
67	bar
68	cyclone body

Detailed Description

As shown in Figure 1, the vacuum cleaner mainly includes a main housing l and a dust cup 6. The dust cup 6 forms part of the vacuum cleaner body when connected to the main housing 1. The upper part of the main housing 1 has a handle 2 that includes a dust cup release button 4, an air inlet channel opening 8 located at the front end of the dust cup 6, and a dust collection chamber 9 formed from the bottom part of the dust cup 6. In a preferred embodiment, the dust chamber 9 is made of transparent material, so that the amount of dust accumulated inside can be observed. A removable battery cover 10 is attached to the rear bottom part of the main housing l to facilitate removal of the battery for recycling or repair purposes. Accessories 11 can be stored on the underside of the main housing 1 when not in use. Both sides of the main housing l have slits 5 used as exhaust gas outlets. A cyclone body 7 is located in the dust cup 6 and forms part of the surface of the vacuum cleaner. In a preferred embodiment, the cyclone body 7 is made of transparent material, so that the cyclone effect inside the cyclone body 7 can be observed. There can be multiple cyclones in the cyclone body 7. In a preferred embodiment, there are two cyclones.

Figure 2a and Figure 2b respectively show the dust cup 6 and the main housing l of the vacuum cleaner. Figure 2a shows the dust cup 6 separated from the main housing 1. It can be seen that the dust chamber 9 includes a dust chamber opening 35 and a middle wall 21. The middle wall 21 divides the cavity of the dust collection chamber 9 into two parts, forming a cavity 30 and a cavity 31. As shown in Figure 2a, the separator top 65 fits into the upper part of the dust cup 6. The separator top 65 has a return tube end 48, a return tube end 49, and a surface 34 surrounded by a filter seal 22. The filter sealing strip 22 is preferably made of elastic material.

Figure 2b shows the main housing 1 of the vacuum cleaner with the dust cup 6 removed. The filter 18 is located on the upper part of the contact surface 33 on the main housing 1. In a preferred embodiment, the filter 18 is made of a breathable material such as foam. The removable pin 12 is located in front of the handle 2 on the front top surface of the main housing 1. The movable pin 12 responds to the movement of the dust cup release button 4. The convex surface 36 protrudes forward at the lower part of the front part of the main housing l, and the dust chamber sealing strip 19 is arranged around the edge of the convex surface 36. The dust chamber sealing strip 19 is preferably made of elastic material such as rubber.

A cross-sectional view of the present invention is shown in Figure 3. Within the main housing l is a battery pack 14 and a motor 15 connected to the impeller 16. The impeller 16 is covered by a funnel-shaped inlet 27 provided with a protective rod 50 to prevent user access to the impeller 16. The handle 2 is provided with a switch 3, and the switch 3 is engaged with the switch 28 to control the PCB component 29 arranged at the rear position inside the vacuum cleaner. Under the main housing l, there is a groove 17 for storing accessories 11.
The internal structure of any of the cyclones is described below. In Figure 3, an air inlet channel 20 inside the dust cup 6 is shown, one end of which reaches the air inlet channel opening 8 and the other end reaches the T-shaped double bifurcation 51. The air inlet channel 20 communicates with the cyclone 46 through the cyclone opening 40 at the T-shaped double bifurcation 51. Inside the cyclone 46 there is a return pipe 37 and a cyclone end 44. During normal operation, the separator top 65 connected to the return pipe 37 and the return pipe 38 (not shown) is combined with the dust cup 6 to complete the cyclone system. There is a filter 18 between the dust cup 6 and the funnel-shaped inlet 27, which can protect the impeller 16 and the motor 15 when sharp or hard objects pass through the cyclone system. For cleaning purposes, the separator top 65 can be removed from the dust cup 6.

Figure 3 shows the general operating principle of air flow in a vacuum cleaner. When the switch 28 is in the “ON” position, the PCB component 29 controls the battery pack 14 to provide power to the motor 15. The motor 15 then rotates the impeller 16 to generate suction at the air inlet passage opening 8, and sucks the air with dust through the air inlet passage 20 into the cyclone 46 and the cyclone 47 (not shown). The dusty air is then cleaned by cyclone separation and flows into the main housing 1 through the filter 18 and the funnel-shaped inlet 27. The funnel-shaped inlet 27 converges the downstream air paths of all cyclones and directs the airflow into the center of the impeller 16. Within the main housing 1, the wall surrounding the motor 15 and battery pack 14 forms a long air path to guide clean air, which helps to cool the components and reduce noise. Finally, the air is discharged from the housing through slit 5.

It is shown in Figure 4 that the dust cup 6 is connected to the main housing 1 through a fixed pin 13 and a movable pin 12, the movable pin 12 responding to the movement of the dust cup release button 4. The figure shows that the movable pin 12 is provided on one end of a dust cup lock 25 which is rotatably fixed on the hinge 24 and which is in contact with the rod 61 with the other end. As shown in the figure, one end of the rod 61 rotatably fixed on the rod 62 is in contact with the dust cup lock 25, and the other end is in contact with the putter 23 extending from the dust cup release button 4. The spring 26 is disposed between the fixed wall 52 and the dust cup lock 25 to exert an upward force on the lower surface of the dust cup lock 25. Therefore, if the dust cup release button 4 is not pressed, the spring 26 pushes the dust cup lock 25 upwards and forces the movable pin 12 to stay in the locking position, thereby locking the dust cup 6.

In order to remove the dust cup 6 from the main housing 1, the user must press the dust cup release button 4 so that the putter 23 exerts a downward force on one end of the rod 61, and force it pivot about the rod 62 in a clockwise direction from the view shown in Fig. 4. The other end of the rod 61 then forces the dust cup lock 25 to pivot around the hinge 24 in a counterclockwise direction from the view shown in Fig. 4 , and the movable pin 12 is released from the dust cup 6. At this time, only the fixing pin 13 is engaged with the dust cup 6, so the dust cup 6 can be separated from the main housing 1.
For good suction and cyclonic performance, a completely sealed air path is important. Therefore, a filter seal 22 and a dust chamber seal 19 are provided between the dust cup 6 and the main housing 1 to ensure that there is no air leakage. Referring to Fig.4, when the dust cup 6 is connected to the main housing l, the filter 18 is located between the surface 34 and the protective rod 50. Further, the filter sealing strip 22 surrounding the surface 34 is in contact with the contact surface 33. Since the filter sealing strip 22 is made of elastic material, there is no air leakage between the filter sealing strip 22 and the contact surface 33. When the dust cup 6 is connected to the main housing 1, an air converging chamber 60 is formed between the separator top 65 and the funnel-shaped inlet 27. The air paths from the individual cyclones converge therein into a single air path and are directed into the funnel-shaped inlet 27. At the same time, the convex surface 36 fits the opening 35 of the dust collection chamber. Since the elastic dust chamber sealing strip 19 exists between the convex surface 36 and the dust chamber opening 35, the cavity 30 and the cavity 31 are sealed.

In the present invention, the dust cup 6 includes a cyclone system with two parallel cyclones. As shown in Figures 5 and 6, dust-laden air passes through the air inlet channel opening 8 and flows through the air inlet channel 20 to the T-shaped double bifurcation 51, where the air flow is divided into two streams. As shown in Figure 5, there is a wall 55 below the T-shaped double bifurcation 51, which causes the dust-laden air to be divided into two airflows and enter the cyclone 46 and cyclone 47 through the cyclone opening 40 and the cyclone opening 41, respectively. The wall 55 is preferably flat to avoid dirt material getting stuck there. As shown in Fig. 6, the dust-laden air flows tangentially onto the inner surfaces of the cyclones 47 and 46, and forms vortices 43 and 42 within the respective cyclones, respectively. This causes dust particles that are heavier than air to move out of the vortex through centrifugal force. This phenomenon is commonly referred to as cyclonic separation and is well known to those skilled in the art.

The air flow path in any of these cyclones is described below. As shown in Figure 5, there is a vortex stop 64 on the end wall 56 within the cyclone 46. The centers of the vortex stopper 64 and the vortex 42 are concentric. Therefore, at the center of the vortex 42, the cleaner air will first collide with the vortex stopper 64, and then the airflow will reverse to the opposite direction and enter the return pipe 37. At the same time, the dust 39 continues to flow towards the end wall 56 and escapes into the dust collection chamber 9 along the tangential direction. As mentioned before, the dust collection chamber 9 is connected to the cyclone body via the dust release hole. The figure shows that dust 39 escapes into the cavity 30 through the cyclone end 44 through the action of inertia. During normal operation, the dust cup 6 is connected to the main housing 1 so that the cavity 30 is sealed. Fig. 6 also shows the structure and air flow inside the cyclone 47. In the cyclone 47, there are the cyclone opening 41, the cyclone end 45, and the vortex stopper 6 holes on the end wall 57. The principle of cyclonic separation represented by the vortex 43 is also the same as in the cyclone 46.

Figure 6 shows that within each cyclone there is a return pipe with a tapered end. Taking the cyclone 46 as an example, the return pipe 37 has a tapered end 58. In a preferred embodiment, the tapered end 58 has several slits 54 that allow airflow into the return tube 37. Another function of the slit is to act as a rough safety filter to ensure that no large particles enter the return pipe 37. Moreover, other filtration devices such as grids can be used instead of slits or in combination with slits to provide better filtration effects. Within the cyclone 47, the tapered end 59 provided with the slit 53 has the same construction.

As shown in Figure 6, the cleaned air leaves the cyclones 46 and 47 through return tube ends 48 and 49, respectively. The separator top 65 and the funnel-shaped inlet 27 form an air converging chamber 60 to converge the downstream air paths of the cyclones 46 and 47 into a single air path. Filter 18 is located at the rear end of dust cup.

In the present invention, the cyclone system is designed to collect dust 39 in an independent dust collection chamber 9 , and the dust collection chamber 9 is far away from the cyclones 46 and 47. A clear illustration of the construction of the cyclone system and dust chamber 9 can be seen in Fig. 5, while Fig. 8 shows the difference in the dust storage method between a conventional cyclone system and the cyclone system of the present invention.
In a traditional cyclone system, generally speaking, there is no independent dust collection chamber, and the filter 32 in front of the motor is located in the cyclone body 68. It can be seen that the cyclone body and the dust collection chamber are actually the same part. This causes more and more dust 39 to accumulate on the filter without actually being separated by the cyclonic action. This invention uses an independent dust storage device located far away from the cyclone, and cooperates with an efficient cyclone system. As a result, most of the dust will be separated through the cyclone, and only a small amount of dust (mainly very fine dust) will pass through the system and enter the filter. As a result, users will not have to clean the filter as often and will experience constant suction power and a more convenient method of cleaning the dust cup.

The present invention provides a clean and fast dust removal process, which is an improvement over traditional handheld vacuum cleaners. The dust collection chamber 9 with the dust collection chamber opening 35 is provided together with the dust cup 6 of the vacuum cleaner. Therefore, simply separate the dust cup 6 from the main housing 1, the dust 3 accumulated in the cavity 30 and the cavity 31 can be discharged from the dust collection chamber 9, making cleaning the dust collection chamber 9 a more convenient and hygienic process. Because the user does not have to touch or remove any parts or filters that come into contact with dust. Another opening device that replaces the dust collection chamber opening 35 can be a movable door on the dust collection chamber 9.

In the present invention, some useful accessory tools are designed to improve the functionality of the vacuum cleaner. Fig. 7 shows the bar 67 and the floor nozzle 66.

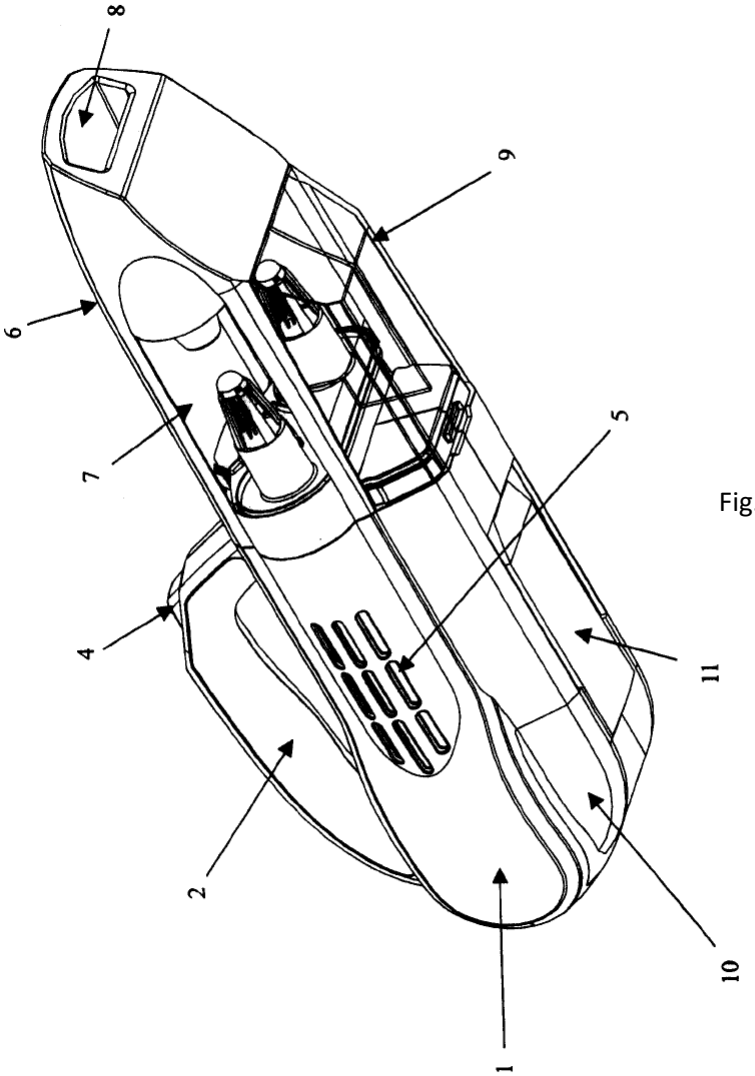

Fig.1

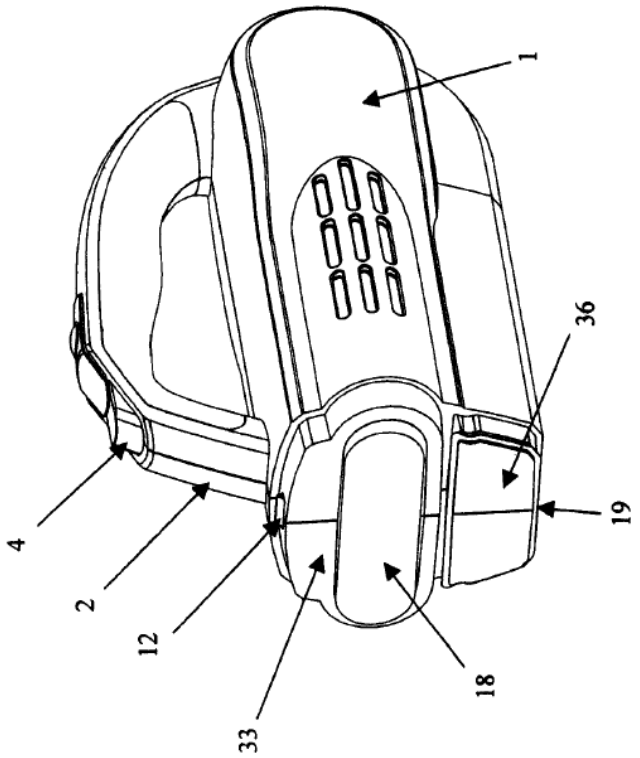

Fig. 2b

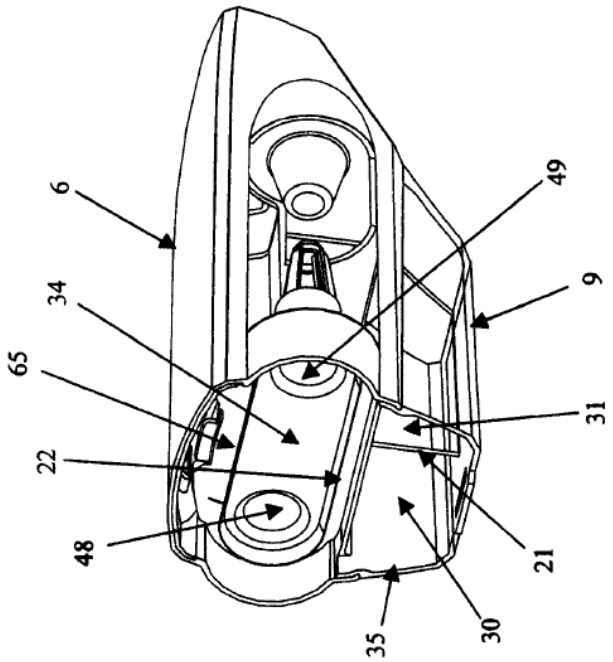

Fig. 2a

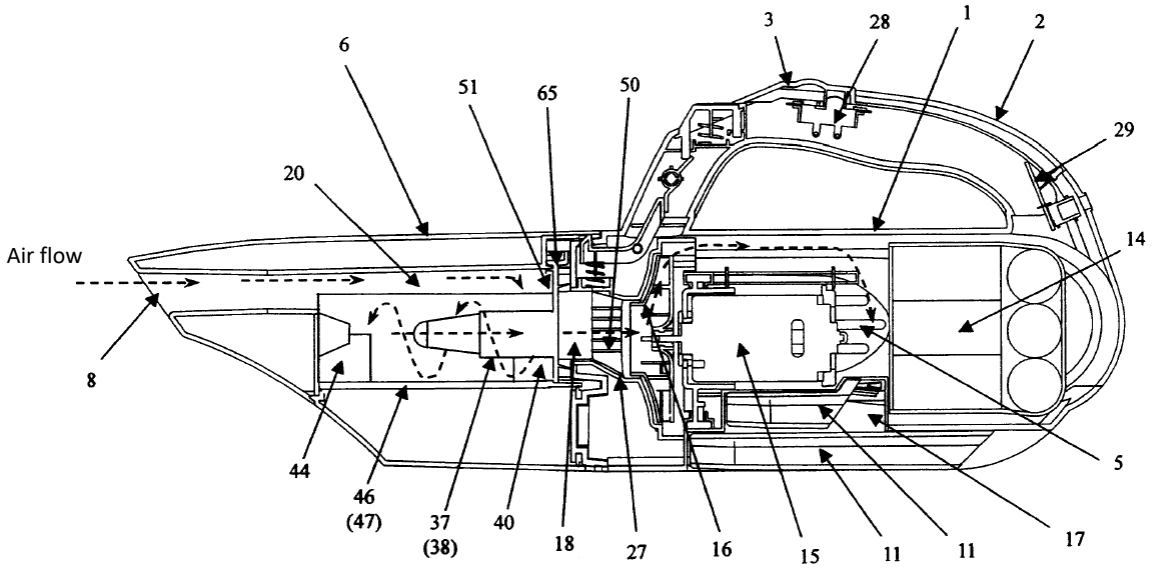
Air flow
6
51
65
50
20
3
28
1
2
29
14
8
44
46
(47)
37
(38)
40
18
27
16
15
11
11
17
5

Fig. 3

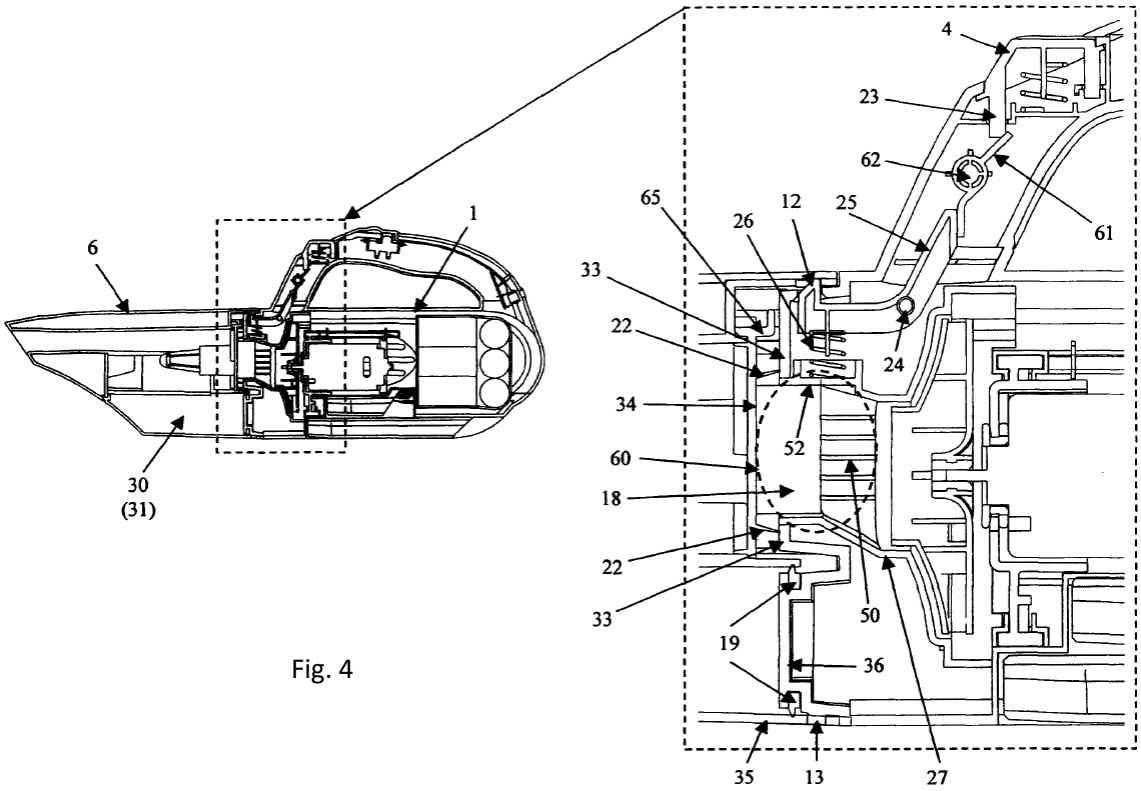
6
1
30
(31)
4
23
62
61
65
12
25
26
33
22
24
34
52
60
18
22
33
50
19
36
35
13
27

Fig. 4

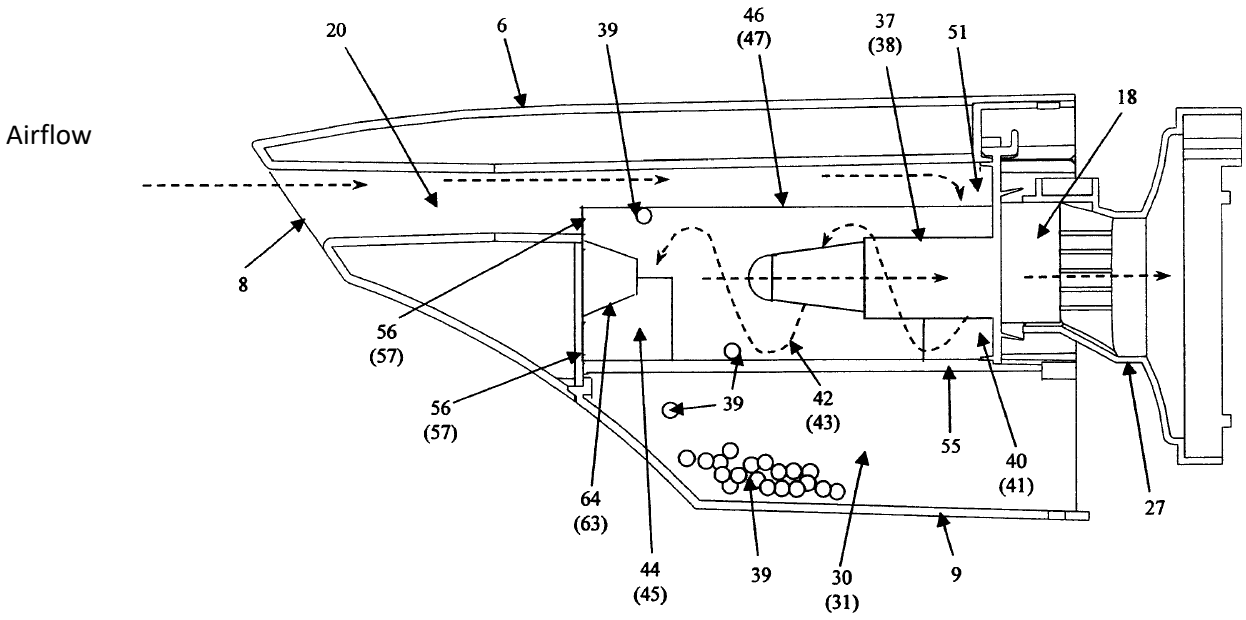
Airflow
20
6
39
46
(47)
37
(38)
51
18
8
56
(57)
56
(57)
39
42
(43)
55
40
(41)
64
(63)
44
(45)
39
30
(31)
9
27

Fig. 5

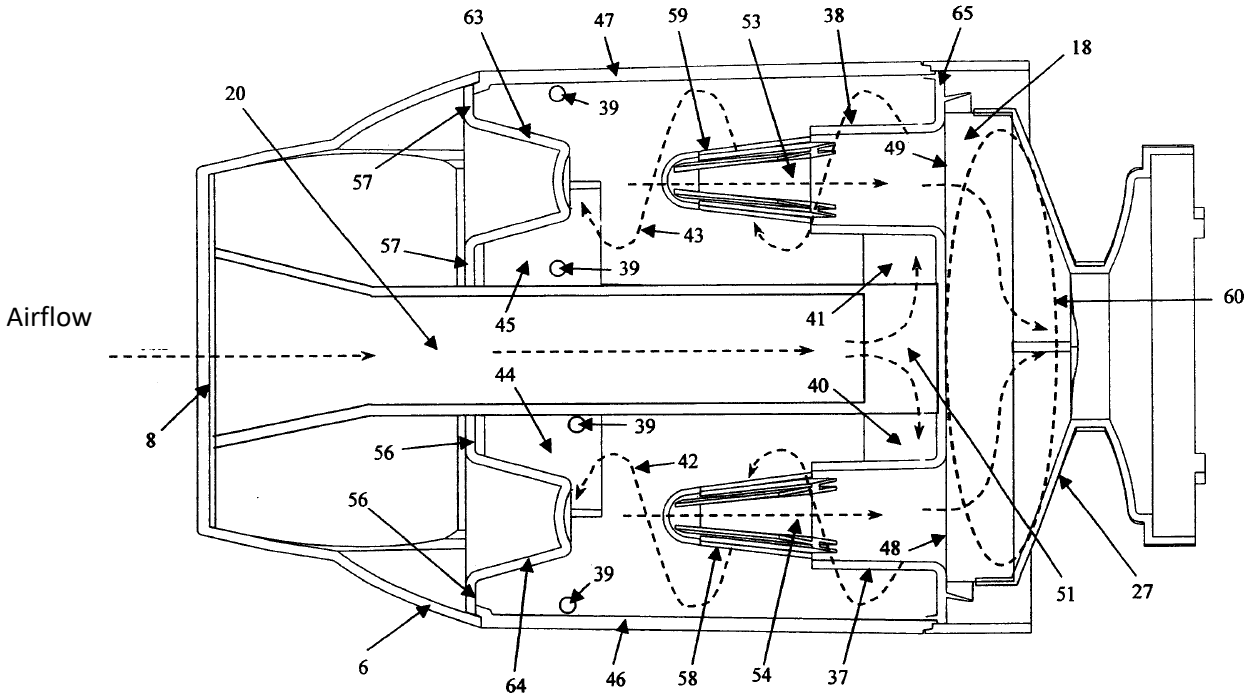
Airflow
63
47
59
53
38
65
18
20
39
57
49
43
57
39
60
45
41
44
40
8
39
56
42
56
48
39
51
27
6
64
46
58
54
37

Fig. 6

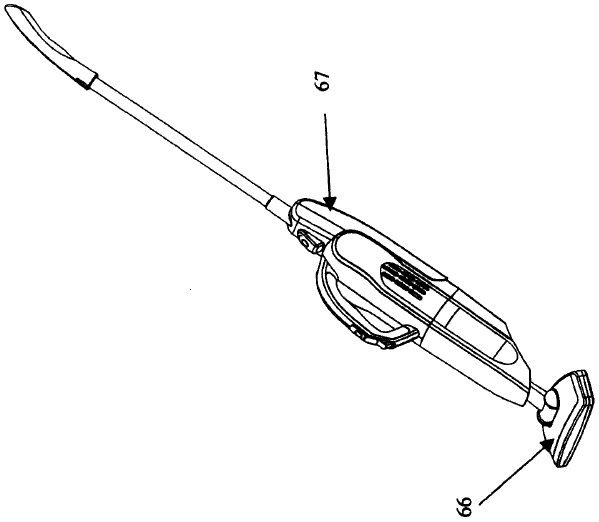

Fig. 7

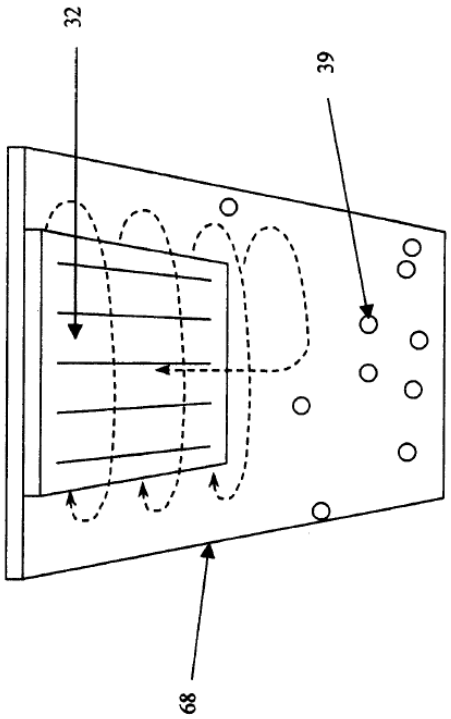

Fig. 8

MORNINGSIDE

TRANSLATOR CERTIFICATION

Date: November 27, 2023

To whom it may concern:

I, SHAUN WU , a translator fluent in the CHINESE and ENGLISH languages, on behalf of Morningside Translations, do solemnly and sincerely declare that the following is, to the best of my knowledge and belief, a true and correct translation of the document(s) listed below in a form that best reflects the intention and meaning of the original text.

The document is designated as:

- CN101061932A

Shaun Wu

Signature

SHAUN WU

Print