(12) INTERNATIONAL APPLICATION PUBLISHED UNDER THE PATENT COOPERATION TREATY (PCT)

(19) World Intellectual Property Organization
International Bureau

(43) International Publication Date
26 July 2007 (26.07.2007)

PCT

(10) International Publication Number
WO 2007/084543 A2

(51) International Patent Classification:
A47L 9/32 (2006.01) *A47L 9/10* (2006.01)

(21) International Application Number:
PCT/US2007/001205

(22) International Filing Date: 17 January 2007 (17.01.2007)

(25) Filing Language: English

(26) Publication Language: English

(30) Priority Data:
11/332,400 17 January 2006 (17.01.2006) US
60/809,789 1 June 2006 (01.06.2006) US

(71) Applicant *(for all designated States except US)*: **ELECTROLUX HOME CARE PRODUCTS NORTH AMERICA** [US/US]; 807 North Main Street, Bloomington, IL 61701 (US).

(72) Inventors: **BUTLER, Dennis**; 35366 E 1400 North Road, Saybrook, IL 61770 (US). **PAREDES, Apollo**; 211 Master Drive, Bloomington, IL 61704 (US). **SEPKE, Arnie**; 17567 Trillium Lane, Hudson, IL 61748 (US).

(74) Agents: **CAMPBELL, Christopher, C.** et al.; HUNTON & WILLIAMS LLP, INTELLECTUAL PROPERTY DEPARTMENT, 1900 K Street, N.w., Suite 1200, Washington, DC 20006-1109 (US).

(81) Designated States *(unless otherwise indicated, for every kind of national protection available)*: AE, AG, AL, AM, AT, AU, AZ, BA, BB, BG, BR, BW, BY, BZ, CA, CH, CN, CO, CR, CU, CZ, DE, DK, DM, DZ, EC, EE, EG, ES, FI, GB, GD, GE, GH, GM, GT, HN, HR, HU, ID, IL, IN, IS, JP, KE, KG, KM, KN, KP, KR, KZ, LA, LC, LK, LR, LS, LT, LU, LV, LY, MA, MD, MG, MK, MN, MW, MX, MY, MZ, NA, NG, NI, NO, NZ, OM, PG, PH, PL, PT, RO, RS, RU, SC, SD, SE, SG, SK, SL, SM, SV, SY, TJ, TM, TN, TR, TT, TZ, UA, UG, US, UZ, VC, VN, ZA, ZM, ZW.

(84) Designated States *(unless otherwise indicated, for every kind of regional protection available)*: ARIPO (BW, GH, GM, KE, LS, MW, MZ, NA, SD, SL, SZ, TZ, UG, ZM, ZW), Eurasian (AM, AZ, BY, KG, KZ, MD, RU, TJ, TM), European (AT, BE, BG, CH, CY, CZ, DE, DK, EE, ES, FI, FR, GB, GR, HU, IE, IS, IT, LT, LU, LV, MC, NL, PL, PT,

[Continued on next page]

(54) Title: STAIR CLEANING VACUUM CLEANER

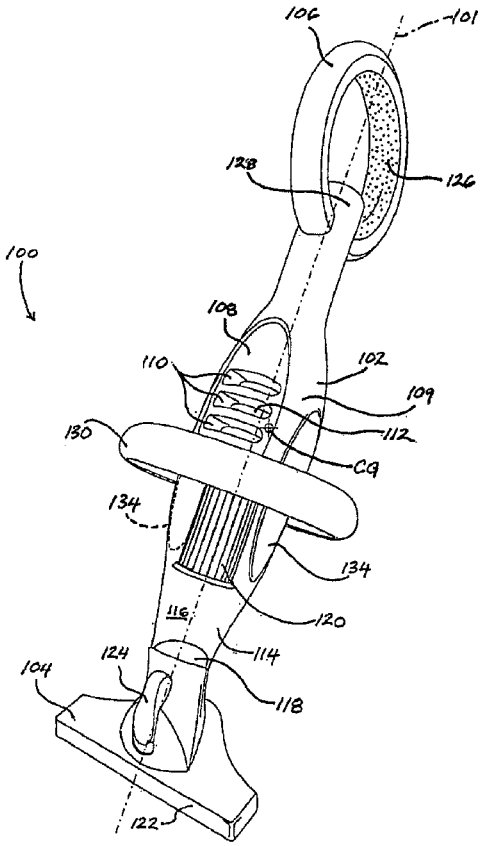

(57) Abstract: A vacuum cleaner having a generally elongated housing having a first housing end and a second housing end, a rear grip located at the first housing end, and an air inlet located at the second housing end. A vacuum fan and a motor are located within the housing and the motor is adapted to drive the vacuum fan to draw a working air flow into the air inlet. A dirt receptacle is operatively associated with the housing and adapted to remove particles from the working air flow. The vacuum cleaner also includes one or more foregrips located on the housing between the rear grip and the air inlet. In various aspects, the foregrips are adapted to: provide a user with multiple hand positions around the perimeter of the housing; simultaneously grasp the rear grip and the one or more foregrips and clean staircase surfaces while remaining substantially upright; and/or hold and operate the vacuum cleaner when the housing is rotated about its longitudinal axis at a first angular position and at a second angular position, the first angular position being approximately 90 degrees or more from the second angular position.

WO 2007/084543 A2

RO, SE, SI, SK, TR), OAPI (BF, BJ, CF, CG, CI, CM, GA, GN, GQ, GW, ML, MR, NE, SN, TD, TG).

Published:

— *without international search report and to be republished upon receipt of that report*

For two-letter codes and other abbreviations, refer to the "Guidance Notes on Codes and Abbreviations" appearing at the beginning of each regular issue of the PCT Gazette.

STAIR CLEANING VACUUM CLEANER

FIELD OF THE INVENTION

The present invention relates to vacuum cleaners, and particularly to a novel vacuum cleaner adapted for cleaning in stairwells and other confined spaces.

BACKGROUND

Vacuum cleaning devices are in widespread use as a tool to clean floors, upholstery, stairs, and other surfaces. Such vacuum cleaners are provided in a number of configurations, such as upright and canister vacuum cleaners, wet extractors, stick vacuums, electric brooms and so on. While these known vacuum cleaner configurations are useful for cleaning various surfaces, it has been found that they are generally better suited for some surfaces than others. For example, upright vacuum cleaners, such as those illustrated in U.S. Pat. Nos. 5,564,160, and 6,829,804, include a floor-engaging base to which an upright handle is pivotally attached, and are generally best suited for cleaning relatively unobstructed floor spaces. While such upright vacuums may be provided with a recessed grip on the handle just above the base to help the user lift the base for cleaning above the floor, such as in U.S. Pat. No. 5,564,160, the shape and balance of the device inhibits prolonged ergonomic use in this manner. As such, while such a grip might improve the user's comfort, various other features endemic to typical upright vacuums still make using them to clean stairs and other elevated surfaces relatively uncomfortable. Furthermore, even if a grip is provided on a conventional upright vacuum, it typically does not allow easy rotation of the device to clean vertical surfaces or other inclined surfaces, such as stair risers. When doing so, the user is often faced with the dangerous combination of heightened exposure to a rotating brushroll and unwieldy ergonomics.

Canister vacuum cleaners can be somewhat more user-friendly for cleaning stairs, stair risers, and other elevated and vertical surfaces. However, even these devices suffer from various shortcomings. Canister vacuums typically have a floor-cleaning nozzle attached by a hose to a canister that holds a dirt collection device

Dyson Ex1020
Page 3

and a vacuum source. The provision of a cleaning nozzle on the end of a hose allows greater flexibility in manipulating the vacuum nozzle to clean elevated and vertical surfaces. However, the canister portion of the device is typically at constant risk of tumbling down the stairs, the user's movement is limited by the device's hose length, and the use of a long hose often results in reduced suction at the nozzle inlet. Upright vacuums provided with extension hoses for cleaning above the floor also typically suffer from these and other problems. While some canister vacuums, such as that shown in U.S. Pat. No. 5,755,007, include a recess to make them more stable on stairs, such cleaners still must be constantly moved as the user progresses along the length of the stairs and reaches the end of the hose's reach, and they still suffer from potentially reduced suction force.

A third type of vacuum, commonly referred to as a stick vacuum, may be somewhat more appropriate for cleaning stairs and vertical surfaces than upright and canister vacuums. Stick vacuums are essentially lightweight or compact upright vacuums, and may be battery powered to make them more portable. An example of a stick vacuum is shown in U.S. Pat. No. D382,681. Stick vacuums often are easier to manipulate than upright vacuums, do not suffer from reduced suction caused by the use of a long hose (although use of battery power may require less powerful vacuum motors), and do not require constant tending to a canister. However, these devices still are not ideally designed for cleaning stairs and vertical surfaces. For example, stick vacuums are generally made to mimic the structure and ergonomics of a typical upright vacuum cleaner, and many do not even include a grip at the bottom of the handle to assist with lifting the device for above-floor and stair cleaning. Furthermore, even if the stick vacuum is provided with a handle along its length, such devices are not known to include features that allow them to be rotated to clean upright surfaces. For example, the device of U.S. Pat. No. 6,108,864 includes a handle (item 102 in Figure 3) located along its length, but it would be difficult for a user to use this handle to turn the device to face a stair riser without holding the device in an unbalanced position. Stick vacuums are also typically just as long as a conventional vacuum cleaner, which makes them difficult to manipulate in enclosed

stairwells, closets, and other confined spaces. This length also makes it difficult for the user to hold the grip located at the end of the handle when cleaning stairs.

Still other vacuums are provided in compact hand-held configurations that are often very easy to manipulate to clean raised and vertical surfaces. For example U.S. Pat. No. 4,993,108 illustrates a handheld vacuum cleaner with a stair riser cleaning feature that directs the inlet nozzle horizontally without having to rotate the device. However, even these devices are limited because the handle is located so close to the inlet nozzle, that in many instances the user must kneel or bend to reach the surface being cleaned.

In view of the foregoing considerations, and others not specifically listed herein, there exists a need for an improved vacuum cleaner for cleaning raised and vertical surfaces, and particularly stair treads and risers. It will be understood that the recitation of the foregoing observations of the prior art does not constitute an admission that these observations were previously known or understood by others, and is not intended to limit the invention to excluding embodiments that do not resolve or improve any or all of the foregoing observed aspects of the prior art.

Any and all patents listed in this specification are incorporated herein by reference.

SUMMARY OF THE INVENTION

In a first aspect, the present invention provides a vacuum cleaner having a generally elongated housing having a first housing end and a second housing end, a rear grip located at the first housing end, and an air inlet located at the second housing end. A vacuum fan and a motor are located within the housing and the motor is adapted to drive the vacuum fan to draw a working air flow into the air inlet. A power cord is operatively connected to the motor, through the housing, and adapted to provide electrical power to the motor. A dirt receptacle is operatively associated with the housing and adapted to remove particles from the working air flow. The vacuum cleaner also includes a foregrip located on the housing between the rear grip and the air inlet. The foregrip is adapted to provide a user with

multiple hand positions around the perimeter of the housing. In addition, the foregrip comprises a circumferential channel adapted to receive the power cord.

BRIEF DESCRIPTION OF THE DRAWINGS

The present invention is described in detail with reference to the examples of preferred embodiments shown in the following figures, in which like parts are designated by like reference numerals.

Figure 1 is a perspective view of an embodiment of a vacuum cleaner of the present invention.

Figure 2A is a perspective view of another embodiment of a vacuum cleaner of the present invention, showing various complementary parts therewith.

Figure 2B is a cutaway schematic view of a dust bag configuration that may be employed with the embodiment of Figure 2A.

Figure 2C is a cutaway schematic view of a dirt cup configuration that may be employed with the embodiment of Figure 2A.

Figure 2D is a cutaway schematic view of a cyclone separator configuration that may be employed with the embodiment of Figure 2A.

Figure 3 is a perspective view of a first alternative handle arrangement of the present invention.

Figure 4 is a perspective view of a second alternative handle arrangement of the present invention.

Figure 5 is a partially cut away side view of still another embodiment of a vacuum cleaner of the present invention.

Figure 6 is a partially cut away side view of another alternative handle arrangement of the present invention.

Figure 7 is a partially cut away side view of another alternative handle arrangement of the present invention.

Figure 8 is a schematic view of another alternative handle arrangement of the present invention.

Dyson Ex1020
Page 6

Figure 9A is a partially cut away, partially schematic view of an embodiment of a vacuum cleaner of the present invention having telescoping portions, shown with the telescoping portions retracted.

Figure 9B is a partially cut away, partially schematic view of the embodiment of Figure 9A, shown with the telescoping portions extended.

Figure 9C is a cut away fragmented view of a telescoping lock that may be used with embodiments of the present invention.

Figure 10 is a partially cut away fragmented view of an embodiment of a vacuum cleaner handle of the present invention.

Figure 11 is a cut away front view of an embodiment of a cleaning tool of the present invention.

Figure 12A is a cut away side view of an embodiment of a cleaning tool of the present invention, shown along reference line II-II of Figure 12B.

Figure 12B is a cut away front view of the cleaning tool of Figure 12A, shown along reference line I-I thereof.

Figure 13 is a partially cut away front view of still another embodiment of a cleaning tool of the present invention.

Figure 14A is a partially cut away perspective view of an embodiment of a stair cleaning vacuum of the present invention.

Figure 14B is a schematic side view of an embodiment of a stair cleaning vacuum of the present invention.

Figure 15 illustrates an exploded view of another embodiment of the present invention.

Figure 16 depicts the embodiment of Figure 15, showing the components required to be assembled by a consumer.

Figure 17A is an exploded view of some of the components of an embodiment of the present invention.

Dyson Ex1020
Page 7

Figure 17B is a cross-sectional view of the assembled embodiment of Figure 17A , shown along the centerline of the vacuum.

Figure 18 is an exploded view of a handle assembly of the present invention.

Figure 19 illustrates a variation to the handle assembly shown in Figure 18.

Figure 20A shows another handle assembly of the present invention.

Figure 20B illustrates a top view of the handle assembly of Figure 20A and the corresponding attachment features of a vacuum of the present invention.

Figure 21 depicts a perspective and front views of another embodiment of the present invention.

Figure 22A illustrates the assembly details of the embodiment shown in Figure 21.

Figure 22B illustrates a side view of the handle assembly of Figure 21 and the corresponding attachment features of a vacuum of the present invention.

Figure 23 illustrates a cord wrap and release feature of the present invention.

Figure 24 illustrates a nozzle assembly of the present invention.

Figure 25 illustrates one component of the nozzle assembly depicted in Figure 24.

Figure 26 illustrates another component of the nozzle assembly depicted in Figure 24.

Figures 27A and 27B illustrate the nozzle assembly shown in Figure 24 in collapsed and extended positions, respectively.

Figure 28 is an exploded view of a packing arrangement for the present invention.

Figure 29A is an assembled top view of the packing arrangement illustrated in Figure 28.

Figure 29B is an assembled side view of the packing arrangement illustrated in Figure 28.

DETAILED DESCRIPTION OF PREFERRED EMBODIMENTS

The present invention provides a vacuum cleaner that can be used to clean floors and carpets, but is particularly adapted to clean stair treads or other elevated horizontal surfaces, stair risers and other inclined or vertical surfaces, and surfaces located in confines spaces. A number of variations of the present invention are described herein, but the illustration of these particular embodiments is not intended to limit the scope of the appended claims. In addition, while the devices described herein relate to a vacuum cleaner, it will be understood that the invention may also cover other, similar devices, such as wet extractors and the like.

Various inventive vacuum cleaner accessories are also described herein. These accessories are inventive in their own right, and may be used in conjunction with the vacuum cleaners of the present invention, or with other cleaning devices, as will be understood by those of ordinary skill in the art.

Referring now to Figure 1, in a first embodiment, the present invention provides a stair cleaning vacuum 100 generally comprising a housing 102 having an inlet nozzle 104 at a first end of the housing 102, and a rear grip 106 at a second end of the housing 102. The housing 102 contains a conventional vacuum fan and motor assembly (sometimes referred to as a "fan/motor"), which is contained within the housing 102 and not visible in Figure 1. The housing also includes appropriate features to power the fan/motor, such as a power cord or batteries, as are known in the art.

In the embodiment of Figure 1, the fan/motor is contained in a fan/motor chamber 109 beneath a shroud 108 having a number exhaust vent apertures 110 passing therethrough. In operation, air drawn in by the fan/motor is exhausted from the housing 102 through these apertures 110. A post-motor filter 112 may be located between the vent apertures 110 and the fan/motor exhaust port to provide a final filtration stage, as known in the art. In such a case, the shroud 108 may be removable or openable to service the post-motor filter 112. As with any other filters described herein or otherwise used in embodiments of the invention, the post-motor filter 112 may take any shape or form. Typical filters are formed as a foam sheet or

block, a pleated sheet rigidly held in a frame, a rigid panel, a flexible sheet, and so on. Such filters may also have any filtration performance grade, such as HEPA grade (an acronym for "High Efficiency Particle Air," which is standardized as being capable of removing 99.97% of particles 0.3 microns in size or larger) or ULPA grade (an acronym for "Ultra Low Penetration Air," which is standardized as being capable of removing 99.999% of particles 0.12 microns in size or larger). Of course, lesser or greater grades of filtration media may also be used.

It is also known in the art to measure the differential pressure across the post-motor filter and others filter in a vacuum cleaner, using conventional pressure sensors, to determine when the pressure drop exceeds a given threshold to identify when the filter is clogged, and such features may be used with the present invention for the post-motor filter 112 or other filters. In addition, such a pressure differential sensor could also be used to determine when the post-motor filter 112 or other filter is absent, as would be indicated by little or no pressure drop across the sensors. Thus, suitable electronics may be wired to a differential pressure sensor to alert the user of the absence of the post-motor filter 112 or other filters in the device, or the need to service such filters.

A dirt receptacle 114 is provided in or on the housing 102, preferably between the fan/motor chamber 109 and the inlet nozzle 104. In the shown embodiment, the dirt receptacle 114 includes a transparent outer wall 116 forming a cup-like receptacle, and an inlet 118 through the end nearest the inlet nozzle 104. The inlet 118 may have a flap and/or tubular extension (not shown) into the receptacle 114 to help prevent entrapped dirt from falling back through the inlet 118. A filter 120 is positioned in the dirt receptacle 114 to cover the receptacle outlet (not shown) or the fan/motor inlet (not shown) and filter dirt out of the airstream.

While a cup and filter arrangement is illustrated, the dirt receptacle 114 may alternatively comprise any known type of dirt separation and retention system. Several exemplary variations are described later herein with reference to Figures 2A to 2D and 5. For example, the dirt receptacle 114 may comprise a structural extension of the housing 102, as explained more fully with reference to the

embodiment of Figure 5, or may be a non-structural part that is attached to the housing 102, as explained more fully with reference to the embodiment of Figures 2A to 2D. The dirt receptacle 114 may also comprise a chamber within the housing 104 that is emptied by opening or removing a door through the housing wall. Other configurations for the dirt receptacle may be used as well, and the dirt separation function of the vacuum cleaner 100 may be performed by any principle, such as cyclonic separation, dirt entrapment (filtering), or combinations thereof.

The inlet nozzle 104 may comprise any structure adapted to clean objects and surfaces, such as hardwood and carpets. A typical inlet nozzle 104 may comprise a laterally elongated cleaning head 122 having a similarly elongated inlet slot (not shown) facing downward towards the intended location of a surface desired to be cleaned. Wheels or skids may be provided to hold the inlet slot a predetermined distance from the surface being cleaned (see, e.g., Figure 13), and such devices may be adjustable to modify this height to suit the given conditions or surface type. Bristles may also be provided to help entrap hair, agitate the surface, and otherwise assist with cleaning. It is also known to place skirt-like strips of material on the bottom surface to prevent particles from escaping the airflow entering the inlet slot. One or more brushrolls may be positioned in the inlet nozzle 104 to further agitate the surface being cleaned and enhance cleaning performance. Such brushrolls may be powered by the fan/motor, a separate motor, by an airflow-powered impeller drive, or by other known means. The inlet nozzle 104 may also be removable, such as by actuating one or more release clasps 124, rotating a bayonet fitting, or by simply pulling on the inlet nozzle 104 to overcome a friction fit. Once removed, other types of inlet nozzle (such as dusters, crevice tools, and so on) may be attached to the to the vacuum cleaner 100, as known in the art.

In the embodiment of Figure 1, the inlet nozzle 104 is angled relative to the vacuum cleaner housing 102 such that the inlet nozzle's working surface (that is, the surface that is intended to face the surface being cleaned) is angled at about 30-60 degrees, and most preferably about 45 degrees, relative to the longitudinal axis 101 of the vacuum cleaner housing 102. This allows the operator to address the surface

being cleaned with the vacuum cleaner 100 in a comfortable angled position. Other angles may be used if so desired.

The inlet nozzle 104 may also be rotatably mounted to the housing 102 so that the angle between its working surface and the housing 102 can be changed. For example, the inlet nozzle 104 may be pivotable about an axis perpendicular to the longitudinal axis 101 of the housing 102. Such pivoting would allow the leading edge of the inlet nozzle 104 to move vertically with respect to the rear edge of the inlet nozzle 104 (or vice-versa), such as typically found in conventional upright vacuums. The inlet nozzle may instead be rotatable about the housing's longitudinal axis 101, or about an intermediate axis oriented somewhere between the longitudinal axis 101 and an axis perpendicular to the longitudinal axis 101. Various combinations of pivots may also be used to provide more complex rotation capabilities. Such pivoting mechanism are known in the art. In addition, in cases in which the inlet nozzle 104 is rotatable, it may also be desirable to provide pivot locks to prevent rotation when it is not desired.

The rear grip 106 is, in this embodiment, rigidly attached to the housing 102 at the second end, and is located generally opposite the inlet nozzle 104. The rear grip 106 is used to support and maneuver the back of the vacuum cleaner 100, and may have any shape suitable for doing so. Preferably, the rear grip 106 is generally circular in shape, and forms a loop that gives the user flexibility in selecting an ergonomic position in which to hold the rear grip 106. The center of the rear grip 106 loop maybe located along the longitudinal axis 101, but may be forward or rearward of this axis 101 if it is found to provide improved ergonomics or other benefits. For example, it may be beneficial to locate the center of the rear grip 106 slightly forward of the longitudinal axis 101 to assist with manipulating the vacuum 100 under low objects. The rear grip 106 also preferably has a circular or at least somewhat rounded cross-sectional profile to provide a natural fit in the user's hand.

While it is suitable to provide the grip as a simple rigid extension of the housing 102, it may instead be separately formed and attached to the housing 102 by

fasteners, welding, adhesives, snap engagement, or the any other suitable attachment method or mechanism.

The rear grip 106, and any other part of the vacuum cleaner 100, may be made from any suitable material, such as ABS plastic (i.e., acrylonitrile-butadiene-styrene copolymers), other plastics, metal, and so on. Plastics are generally preferred as a relatively inexpensive, moldable and structurally rigid material. The rear grip 106 may also include one or more gripping surfaces 126 comprising a material that is more particularly adapted to provide a favorable tactile feel and/or enhanced gripping friction. The gripping surfaces 126 may be formed by treating the surface of the material that forms the rear grip 106, such as by including dimples, checkering, ridges or bumps, or may be provided as a separate tactile material applied to the rear grip 106 itself by mechanical or adhesive attachment, overmolding, or the like. Of course, surface treatments and a separate tactile material may both be used, if desired.

A protrusion 128 extends into the opening formed by the rear grip 106, and has a power switch (not shown) located thereon. This position for the power switch is expected to provide convenient and intuitive operation of the vacuum cleaner 100, and ready access to turn the vacuum cleaner 100 on or off. This location also shields the power switch to some degree from being accidentally activated. Further details of this configuration are described elsewhere herein.

The vacuum cleaner 100 also includes a foregrip 130 located between the rear grip 106 and the inlet nozzle 104. As with the rear grip, the foregrip 130 may be made from any suitable material, and may also include gripping surfaces or surface treatments to enhance the user's grip and feel. As with the rear grip 106, the foregrip 130 preferably has a rounded cross-sectional shape, or is otherwise shaped to naturally fit into a user's hand. In the embodiment of Figure 1, the foregrip 130 is formed into an elliptical, circular, or otherwise continuous loop-like shape that surrounds the housing 102. One or more radial posts (not shown) are provided between the foregrip 130 and the housing 102 to hold it in place and provide one or

more gaps between the foregrip 130 and the housing 102 into which the user may fit his or her fingers or hand.

The foregrip 130 includes various features to enhance the ergonomics and control of the vacuum cleaner 100. For example, the foregrip 130 shown in Figure 1 has a continuous loop-like shape that surrounds the vacuum cleaner housing 102, which allows the user to hold the foregrip 130 in virtually any annular location around the housing 102. This provides improved flexibility in handling the device, and allows the user to rotate the housing to point the inlet nozzle 104 horizontally to clean surfaces such as stair treads, vertically to clean surfaces such as stair risers, or at any angle in between. Regardless of which angular position the housing 102 is in, the user can still maintain a firm and comfortable grip on the rear grip 106 and foregrip 130, and thus on the vacuum cleaner 100 as a whole. It will be appreciated from the foregoing that the foregrip 130 of the embodiment of Figure 1 provides many of the advantages of a rotating inlet nozzle 104 without the need to supply such a feature, but such rotatable inlet nozzle features may still be provided nonetheless.

Another advantage of the present invention is that the user can apply a bending moment force to the vacuum cleaner housing 102 by pressing in opposite directions on the rear grip 106 and foregrip 130. This bending moment force can be used to apply significant pressure between the inlet nozzle 104 and the surface being cleaned. Such pressure can be helpful to agitate the surface, scrub out deeply-embedded or clinging contaminants and dirt, remove entangled hair and fibers, and so on. In addition, the user can press forward on both grips to press the inlet nozzle 104 against the surface being cleaned, but without moving the inlet nozzle 104. This is not possible with conventional upright vacuums and canister vacuum cleaning heads, except when they are perfectly upright, because they are specifically designed to traverse the floor when they are pressed forward. In view of the foregoing capabilities, the vacuum cleaner 100 should be constructed to be able to resist any anticipated reasonable amount of bending or longitudinal force that may be applied through it during normal use.

It will also be seen that the foregrip 130 is arranged about the vacuum's longitudinal axis 101, along which a number of the working parts are approximately located. As such, the foregrip 130 should generally surround the device's center of gravity CG, which is likely to be proximal to the longitudinal axis 101. This being the case, as the user rotates the vacuum cleaner 100, the center of gravity CG will remain at generally the same location, causing the general balance of the device to feel the same regardless of its angular orientation. Furthermore, the user will be able to maintain a comfortable hold on the foregrip 130, with his or her hand above or beside the center of gravity CG, regardless of the angular orientation. This prevents adverse situations often encountered in the prior art of upright and stick vacuums when users attempted to orient the inlets of such vacuums vertically. These devices typically had no grip for stair cleaning, or a grip that was located on the front face of the device. When using these devices to clean vertical surfaces, the user was typically required to turn the device over and, if it was then possible, hold the provided grip with the center of gravity balanced above the user's hand, typically leading to an unstable situation. Alternatively, if there were no grip or the grip was blocked with the device turned over, the user would have to attempt to hold the device at a location that was not intended to be a handle, thereby risking damaging or dropping the device and contact with the inlet nozzle.

While it is likely that users will grasp the foregrip 130 in numerous different places at various times, it is expected that particular parts of the foregrip 130 will be preferred by many users for a large number of cleaning tasks. For example, it is currently believed that many users will prefer to hold the foregrip 130 generally along the side of the housing 102 for most stair cleaning tasks. This would correspond to about the one- to five-o'clock position on the foregrip 130 (as viewed along the longitudinal axis 101 from the rear grip 106) for users that place the right hand forward, and about the seven- to eleven-o'clock position on the foregrip 130 for users that place the right hand forward. When the user rotates the device to orient the inlet nozzle 104 to face stair risers, the user is expected to prefer to hold the foregrip 130 about 90 degrees from the original hand grip position, and perhaps as far as the opposite side of the housing. The user also may wish to hold the foregrip

130 with both hands on both sides of the housing 102 during either horizontal or vertical cleaning, depending on the distance to the surface being cleaned and other factors.

In view of the foregoing, the housing 102 is preferably provided with depressions 134 radially inward of the foregrip 130 at these expected preferred locations. The depressions 134 increase the size of the gap between the housing 102 and the foregrip 130, thereby making it easier for the user to secure a hold at the expected preferred locations. The use of such depressions also allows a more compact foregrip 130, particularly if there is no substantial detriment to the user's ability to grasp the foregrip 130 at locations other than the depressions 134.

As shown in the embodiment of Figure 1, it is currently preferred to provide a first depression 134 radially inward from the foregrip 130 on one side of the housing 103, and a second depression 134 radially inward from the foregrip 130 on the other side of the housing 103. In a preferred embodiment, the first depression's center point with respect to its annular extent around the circumference of the housing 102 is located, as viewed along the longitudinal axis 101, at about one- to five-o'clock, and more preferably at about two- to four-o'clock. In this embodiment, the second depression's center point is at about seven- to eleven-o'clock, and more preferably at about eight- to ten-o'clock. Of course, more or fewer depressions may be used, they may be located at different positions (such as at about twelve-o'clock and/or six-o'clock), or they may be omitted entirely.

It has been found that the position of the foregrip 130 along the longitudinal axis 101 of the vacuum cleaner 100 is also a factor to consider in providing a highly-ergonomic stair cleaning vacuum cleaner. It is preferred to locate the foregrip 130 at a point along the longitudinal axis 101 that allows the user to comfortably grasp both grips and operate the vacuum cleaner 100. In operation, the user is likely to grasp the rear grip 106 with one hand, and the foregrip 130 with the other hand, and move the inlet nozzle 104 in a sweeping action across surfaces being cleaned. If the distance between the grips is too great, the user might find it difficult to grasp both grips at the same time while still being able to easily maneuver the device. If the

distance between the foregrip 130 and the inlet nozzle 104 is too small, the user may have to bend over a significant distance to apply the inlet nozzle 104 to the surface being cleaned. These are both typical drawbacks of many conventional upright vacuum cleaners.

Considering the general build of many users, in one embodiment, the distance between the grips is about six to thirty inches. In a more preferred embodiment, the foregrip 130 is spaced from the most distant graspable portion of the rear grip 106 by about eight to twenty-four inches. These distances are expected to allow the user to comfortably grasp both grips and operate the vacuum cleaner 100 at about a 30 to 60 degree angle on the surface being cleaned, while remaining in a generally upright, comfortable standing position.

To further add to the ergonomics, it is preferred to locate the center of gravity CG between the foregrip 130 and rear grip 106. Doing so should reduce fatigue by distributing the weight between the user's hands, and improve the ease with which the user can rotate and swing the device. The position of the center of gravity CG can be adjusted when designing the device by selectively positioning the various working parts along the length of the vacuum cleaner 100, adding ballast, removing excess weight, and by other methods understood by those of ordinary skill in the art.

Referring now to Figures 2A through 2D, another embodiment of the present invention is disclosed to illustrate various additional features of the invention. As shown in Figure 2A, this embodiment comprises a vacuum cleaner 200 having an elongated housing 202, and inlet nozzle 204, a rear grip 206, and a foregrip 230. The housing 202 includes a fan/motor chamber 209, with a fan/motor 207 (Figures 2A-2D) therein. The fan/motor chamber 209 is located between the grips, and the housing 202 includes a number of outlet apertures 210 to exhaust the working airflow from the fan/motor chamber 209 to the atmosphere. These apertures 210 are shown on the top surface of the device, but any other suitable location could be used. Of course, a filter may be provided between the outlet apertures 210 and the fan/motor 207. Like the embodiment of Figure 1, the foregrip 230 is attached to the housing by a number of radial posts 236, and depressions 234 are provided to

facilitate grasping the foregrip 230. A power switch (not shown) may be provided in any suitable location, and suitable power supply means, such as a power cord or batteries, are also provided, as known in the art.

In this embodiment, the inlet nozzle 204 is attached to the housing 202 by a structural portion 238 of the housing 202. In light of the fact that the grips can be used to generate a significant bending moment within the housing 202, this structural portion is preferably constructed to resist such forces. In addition, this structural portion 238 preferably is formed to provide a dirt receptacle pocket 240 located adjacent the fan/motor chamber 209. An inlet air passage 242 (Figures 2B-2D) joins the inlet nozzle 204 to the pocket 240, either by entering through the bottom of the pocket, as in the variations of Figures 2B and 2C, or through the side, as in Figure 2D. The pocket also includes a fan/motor inlet opening 244 that leads to the fan inlet.

The vacuum cleaner 200 also includes a dirt receptacle 214, which is shaped and sized to be selectively positionable in the pocket 240. As best shown in Figures 2A to 2D, the dirt receptacle 214 is retained in the pocket 240 by fitting into a lip 246 at the end adjacent the inlet nozzle 204, and by a slideable tab 248 at the end adjacent the fan/motor chamber 209. A button 250 is provided to actuate the tab 248 and slide it out of engagement with the dirt receptacle 214 when it is desired to remove the dirt receptacle 214. A spring (not shown) is also provided to bias the tab 248 into engagement with the dirt receptacle 214 when the button 250 is not being actuated. Of course, any other retention mechanism(s) may alternatively be used to hold the dirt receptacle 214 in the housing 202, as will be appreciated by those of ordinary skill in the art.

The present invention may be used with any type of dirt separation system using any theory of operation. Thus, it is envisioned that various different types of dirt receptacle 214 may be used, and may be interchangeable with one another to provide the user with various cleaning options. Three examples are shown in the embodiment of Figures 2A to 2D and described below.

Dyson Ex1020
Page 18

In a first embodiment, shown most specifically in Figure 2B, the vacuum cleaner 200 employs a filter bag 252 to remove dirt from the working air flow. In this embodiment, the dirt receptacle 214 has an opening 254 through its bottom wall to the filter bag 252 opening attaches. The filter bag 252 is held in place by a flange 256 attached around its opening, and this flange 256 may be held in place by a friction fit, mechanical fasteners, being captured in place, or by any other means, as known in the art. The dirt receptacle 214 may include ribs 258 to hold the filter bag 252 away from the interior walls and allow air to flow evenly through the filter bag 252. To this end, similar ribs 260 may also be located on a lid over the end of the dirt receptacle 214, or on a wall of the housing 202 that faces into the dirt receptacle 214.

In the embodiment of Figure 2B, the fan/motor 207 generates a working air flow that enters the filter bag 252 from the inlet air passage 242. The working air passes through the walls of the filter bag 252 to remove particles, passes into the fan/motor 207, and exits the vacuum cleaner 200 through the exhaust apertures 210.

Referring now to Figure 2C, in another embodiment, the dirt receptacle 214 comprises a dirt cup that captures dirt passing therethrough using a non-bag filter. In this embodiment a filter 262 is positioned in the top of the dirt receptacle to filter air passing therethrough. Suitable ridges 264 or other features hold the filter 262 in place. The filter 262 is shown as a simple pleated filter having a planar shape, but may have a conical shape, cylindrical shape, or any other useful shape. As noted previously herein, any type of filter having any filter grade may be used. In addition, a number of different filters may be used, such as a pleated HEPA filter with a relatively coarse screen located upstream to block larger particles from occluding the HEPA filter. Other variations will be apparent to those of ordinary skill in the art.

In this embodiment, air enters the dirt receptacle 214 from the inlet air passage 242 through an opening 266 in the bottom wall. The opening 266 may be somewhat extended in the shape of a pipe to provide an area into which dirt particles can fall without exiting the opening when the fan/motor is turned off. In addition a one-way flap valve 268 may be located at the top of the opening to

prevent dirt from flowing back therethrough. Such a flap valve may also be provided with the other embodiments described herein.

Referring now to Figure 2D, in still another embodiment, the dirt receptacle 214 comprises a cyclone separation chamber in which the working airflow is swirled to remove dirt and dust by centrifugal or cyclonic action. In this embodiment, the inlet air passage 242 may be provided through the structural portion 238 of the housing 202 and terminate at or near the top of the dirt receptacle 214. Also in this embodiment, the inlet air passage 242 enters or terminates at an inlet port 270 through the dirt receptacle sidewall in a tangential or nearly tangential manner, which initiates a cyclonic flow therein. A frusto-conical filter 272 is located over the fan/motor inlet opening 244 to prevent dirt and debris that is not separated by cyclonic action from entering the fan/motor 207. As before, any alternative filter shape, material, construction or filtration grade may be used, and multiple filter layers may also be used, as known in the art.

Of course, alternative means for initiating cyclonic airflow may be used with the embodiment of Figure 2D. For example, the inlet air passage 242 may be generally perpendicular to the inlet port 270, and a diverting member may be included to initiate tangential airflow. The inlet air passage 242 may also be through the bottom wall of the dirt receptacle 214 and include a diverter to initiate cyclonic action. Other variations are also possible, as known by those of ordinary skill in the art.

The variations of Figures 2B to 2D are exemplary, and any other suitable variations to the foregoing embodiments may be practiced with the present invention. For example, the pocket 240 may be omitted, in which case the dirt receptacle would be carried externally to the housing 202 and connected by suitable air conduits to the inlet nozzle 204 and fan/motor 207. Also, the dirt receptacle 214 may be covered by an access panel or door. The dirt receptacle 214 may also be omitted and replaced by a non-removable chamber within the housing. In this variation, the chamber may be selectively covered by a door or the like to facilitate the chamber's emptying. This variation is particularly suited for use with a filter

bag, but may be used with other types of dirt separators. Other variations will be apparent to those of ordinary skill in the art in view of the present disclosure and with routine experimentation with the invention. In addition, various additional features may be provided with the dirt receptacle 214, such as gaskets, lids, and so on.

While the embodiments disclosed thus far have illustrated a looped rear grip and a looped foregrip, these constructions are not strictly required. In other embodiments, the loop-shaped grips may be flattened on one side, or may have rectilinear shapes. In still other embodiments, the loop-shaped grips may be replaced by any combination of rear grip and foregrip that provide the user with hand positions to ergonomically maneuver the device and rotate it into different positions for cleaning horizontal and inclined surfaces. The looped foregrip may also be replaced by a grip having a single hand position that is suited to conveniently apply, in conjunction with the rear grip, a bending moment on the vacuum cleaner housing. The looped foregrip may also be formed as a partial loop to provide multiple hand positions around a portion of the vacuum cleaner housing, or separated into multiple separate grips located around the housing.

One exemplary variation of the grip construction is shown in Figure 3. In this embodiment, the vacuum cleaner 300 comprises a rear grip 306 having a more conventional straight shape, and the foregrip comprises two separate straight grips 330 that extend generally radially from the vacuum cleaner housing 302 at a location adjacent or just forward of the fan/motor chamber 309. A similar variation is shown in Figure 4, in which the vacuum cleaner 400 includes a pistol-grip style rear grip 406, and pistol-grip style foregrips 430 (only one of which is visible). In either of these embodiments, it may be desirable to construct the foregrips 330, 430 such that they can be removed and inserted in various different locations on the housing. The foregrips 330, 430 also may be provided with joints or pivots to allow them to be articulated into more desirable positions. In still other variations, the foregrips 330, 430 may be formed as extensions of the housing 302, 402, or as graspable depressions or openings in the housing 302, 402. While the variations of Figures 3 and 4 do not

allow unlimited hand positions on the foregrip, they still allow greater flexibility and control than grips on conventional vacuum cleaners.

Referring now to Figure 5, another embodiment of the invention is illustrated and described in detail. In this embodiment, the invention comprises a vacuum cleaner 500, having a generally cylindrical housing 502 with a circular or looped rear grip 506, and a circular or looped foregrip 530. Of course, other grip shapes may be used, as explained previously herein. Like the embodiment of Figure 1, a protrusion 528 extends into the rear grip 506, and a power switch 529 is located on the protrusion 528 to provide quick and efficient activation and deactivation of the device. The foregrip 530 is attached to the housing 502 by a number of radially-extending posts 536.

The foregrip 530 surrounds a fan/motor chamber 509 in which the fan/motor 507 is located. The impeller fan 507′ is adjacent the bottom end of the housing 502, and the motor 507″ located between the fan 507′ and the rear grip 506. If motor cooling is required, the motor 507″ may be cooled by the working airflow after it is cleaned by the filtration system, by a separate flow of air, or by simple ventilation. In the embodiment of Figure 5, the housing includes a number of vents 540 for allowing air to pass through the housing 502 to cool the motor 507″. A foam ring 542 may also be provided to prevent particles from the motor from exiting the vents 540 and obstruct the user's view into the fan/motor chamber 509.

The housing 502 also includes a number exhaust apertures 510 for releasing the working air flow to the atmosphere after it is cleaned by the vacuum cleaner 500. The apertures 510 are arranged in an annular pattern around the fan 507′, but may be in other locations. A post-motor filter 512 may also be provided to further filter the air and reduce fan noise generated by the motor 507″ and fan 507′ as the air exits the device.

The motor 507″ is powered by a plurality of batteries 534, which are arranged in an annular fashion around the motor 507″. Of course, other locations for the batteries 534 are possible, such as in the grips or in the portion of the housing 502 between the fan/motor chamber 509 and the rear grip 506. Power may also be

provided by a conventional power cord. In battery-operated embodiments, the vacuum 500 may have exposed or exposable electrical connectors 538 that are adapted to fit in a corresponding charger. For example, in the shown embodiment, electrical connectors 538 are provided at the top of the rear grip 506, and the vacuum is provided with a charger (not shown) upon which the vacuum 500 is hung by the rear grip 506 in a vertical orientation to both store the device, and recharge the batteries 534.

A cylindrical dirt receptacle 514 is removably attached at a bottom end of the housing 502 adjacent the fan/motor chamber 509. In this embodiment, the housing 502 terminates at the dirt receptacle 514, and therefore the dirt receptacle 514 is constructed as a structural member of the vacuum cleaner 500 that can convey bending moments and longitudinal loads from the grips 506, 530 to the inlet nozzle 504. A set of over-center clamps 548 are used to hold the dirt receptacle 514 and housing 502 together, but bayonet fittings, threaded fitment, tabs and slots, screws, or other fasteners may alternatively be used. While the foregoing construction is preferred in this embodiment, other variations may be used. In one variation, the dirt receptacle 514 may be removably attached in pocket formed in a structural portion of the housing that extends to the inlet nozzle 504, as in the previous embodiments. In another variation, the dirt receptacle 514, or at least a portion of it, may be permanently attached to the housing 502, and only the bottom end of it is removable from the device, along with the inlet nozzle 504. For example, the bottom wall 522 may be removably attached to the sidewalls 516 by threaded engagement, bayonet fittings, clamps, screws, or the like.

A filter 520 is provided in or above the dirt receptacle 514, and attached by any suitable means to the housing 502, the dirt receptacle 514, or both. In the shown embodiment, the filter 520 comprises a coarse perforated shroud 520'' that acts as a preliminary filter, and a pleated fine filter 520' that acts as a fine particle filter. Of course, other filter arrangements may be used, as explained previously herein. For example, in one alternative variation, the coarse perforated shroud may be replaced by a cage-like structure having a filter material positioned across the cage openings.

Suitable materials include metal screens, fabric meshes made from woven materials or formed from spun-bonded or meltblown synthetic fibrous materials, and the like. The filter 520 may also include a self-cleaning feature, such as a scraper or other device, to remove dirt from its outer surface between or during use.

The nozzle inlet 504 of the embodiment of Figure 5 comprises an entry tube 524 that passes through the dirt receptacle bottom wall 522. It will be appreciated that any type of cleaning device may be attached to the entry tube 524, such as an elongated cleaning head as shown in the previous embodiments, a crevice tool, a dusting attachment, a so-called powerhead having a rotating agitator, and so on. Of course, if a powered attachment is provided, suitable power leads can be provided to connect the powered attachment to the electric circuit. These leads may pass around or through the dirt receptacle, or may be integrated into the dirt receptacle body.

Located inside the entry tube 524 is a helical ramp 526. The helical ramp 526 extends radially inward from the entry tube's inner wall, and may terminate short of the entry tube's centerline, as shown, to allow an unobstructed central path through the entry tube 524, or may extend to the centerline (or beyond) to block any direct flow of air through the entry tube 524. A one-way flap valve 532 made of a flexible material, such as are known in the art, is provided at the end of the entry tube 524 to prevent reverse flow of dirt out of the dirt receptacle 514. It has been found that the use of the foregoing helical ramp 524 is sufficient to establish a cyclonic airflow pattern within the dirt receptacle 514, despite the presence of the flap valve 532.

While the foregoing cyclonic arrangement for the dirt receptacle 514 is preferred, other types of dirt separation system may alternatively be used, as will be appreciated by those of ordinary skill in the art in view of the present disclosure.

Referring now to Figures 6 through 8, as previously mentioned herein, the rear grip and/or foregrip may be pivotable or otherwise articulated to provide even greater ergonomic flexibility and control of the device. Various non-limiting examples of such movable grips will now be described in detail.

Referring specifically to Figure 6, there is illustrated another embodiment of a vacuum cleaner 600, similar to the embodiment of Figure 5, having a pivotable rear grip 606, and a rotatable foregrip 630. In this embodiment, the rear grip 606 is attached to the housing 602 by a pivoting joint 610. To form this pivoting joint 610 the rear grip 606 is attached to a post 612, which fits into a corresponding opening 613 at the rear of the housing 602. The opening 613 includes a radial track 614 into which a corresponding annular wall 616 on the post 612 fits. This arrangement allows the parts to pivot relative to one another, but fixes them in the linear direction to prevent their removal. Suitable travel stops (not shown) may be provided to prevent excessive relative rotation, and a locking mechanism (not shown) may also be provided to hold the parts in a particular desired relative angular orientation.

The foregrip 630 of the embodiment of Figure 6 is also rotatable about the vacuum cleaner housing 602. In this embodiment, the foregrip is attached to the housing 602 by a number of radially-extending posts 618, which terminate at their inner radial extents at a ring 620. The ring 620 is captured within a track 622 in the housing 602, in which it is free to rotate. Travel stops or a lock may be provided to prevent excessive rotation or selectively prevent any rotation. Bearings or low-friction sliding surfaces may be provided in either the foregrip rotating arrangement or the rear grip pivoting arrangement to facilitate movement between the parts. Of course, other mechanisms for providing relative rotation between the rear grip 606 and/or the foregrip 630 and the housing 602 may be used instead.

The pivoting arrangements of Figure 6 are expected to provide a particular advantage in that they allow the user to hold one grip and rotate the entire vacuum cleaner 600 with the other grip. For example, if the foregrip rotating mechanism is provided, the user can hold the foregrip 630 in generally a single position, and rotate the entire device by twisting the rear grip 606. Similarly, if the rear grip rotation feature is provided, the user can hold the rear grip 606 in generally one position, and rotate the entire vacuum cleaner 600 by manipulating the foregrip 630 much like an automobile steering wheel. While foregrip and rear grip rotating mechanisms such as those shown in Figure 6, may both be provided with embodiments of the

invention, it is expected that it would only be necessary to provide one of these features to obtain these additional benefits of having rotating grip.

It may also be desirable to allow the user to adjust the distance between the rear grip and the foregrip. To this end, another embodiment of the invention, shown in Figure 7, provides a vacuum cleaner 700 having a housing 702, a rear grip 706, a foregrip 730, and other features as described elsewhere herein. In this embodiment, the foregrip 730 is attached to a ring 720 by a number of radial posts 718, and the ring 720 surrounds the cylindrical outer surface of the housing 702. The ring 720 is sized such that it can slide along the length of the housing 702, but is provided with a locking device that can be used to hold the ring 720, and thus the foregrip 730, in various axial positions along the length of the housing 702.

In the embodiment of Figure 7, the foregrip locking device is a locking ring 722 with a gap 724 spanned by a tightening cam mechanism 726. The cam mechanism 726 comprises flanges 728 that extend radially outward from the locking ring 722 on either side of the gap 724. A bolt 738 passes through both flanges 728, and is retained by its head 732 in one of the flanges 728. The other end of the bolt 738 is pivotally attached to a cam-shaped lobe 734 having a lever arm 736 attached thereto. When the lever arm 736 is used to rotate the cam-shaped lobe 734, pivot point between the lobe 734 and the bolt 738 moves towards or away from the flange 728. This closes the gap 724 and compresses the locking ring 722 to hold it in place, or vice versa. The locking ring 722 surrounds the foregrip ring 720, and thus, when it is locked in place, so too is the foregrip 730. Another advantage of this embodiment is that the ring 720 and foregrip 730 may be rotated about the housing 702 when the locking ring 722 is loosened. Of course, any other suitable locking mechanism, such as pins, set screws, and so on, could be used instead.

Referring now to Figure 8, another example of a rotating grip assembly is provided. In this embodiment, the foregrip 830 comprises a loop-like device that is attached to the housing 802 of a vacuum cleaner 800, much like in the embodiments of Figures 1 and 2. The foregrip 830 of this embodiment is pivotable about an axis generally perpendicular to the longitudinal axis 801 of the vacuum 800. This

perpendicular axis extends orthogonal to the page in the view of Figure 8. The foregrip 830 is movable between two positions: an operating position, designated by reference numeral A, and a collapsed position, designated by reference numeral B. Of course, intermediate or other positions may also be provided. In the operating position A, the foregrip 830 is in position to be grasped by a user as explained previously herein. In the collapsed position B, the foregrip lies at or near the surface of the housing 802, making the vacuum cleaner 800 more compact, and allowing it to rest more flatly against a wall 804 or other flat surface.

The inventors have found that the overall length of the vacuum cleaner of the present invention can be established to better suit it for cleaning in stairwells, closets, and other elevated and/or confined spaces. Typical vacuum cleaners are intended, as their primary use, to clean floors. As such, they include ergonomic features directed towards cleaning floors, such as a relatively long handle that prevents the user from having to stoop during normal operations of the device. However, when users clean stairs, they often clean from the bottom up, and stand on a low step to clean higher steps. As such, the distance and angle to the surface being cleaned is different when cleaning stairs than it is when cleaning floors, and users often find conventional vacuums to be too long and cumbersome to use for stair cleaning. Handheld vacuums have been used as a substitute for upright, stick and canister vacuums for cleaning stairs and confined spaces, but such vacuums require the user to stoop, if not kneel, to clean. In addition, some canister vacuum extension wands have adjustable lengths, but they still do not overcome the various other problems with canisters when cleaning stairs, such as the risk of the canister falling. In still other cases, upright vacuums having telescoping or collapsible handles have been provided, but these devices are still difficult to use on stairs because they typically have a conventional single-grip design that makes it difficult to address relatively high stairs, or use a pivoting base that is not particularly suited for cleaning stair risers. Even when such upright vacuums are provided with a second grip to assist with stair cleaning, it is often so close to the base that the user still must stoop to clean the stairs.

Embodiments of the present invention address these shortcomings by providing a relatively compact vacuum cleaner that is long enough to allow typical users to clean elevated stairs without excessive stooping, yet short enough to still provide ergonomic grip and control of the device, and the ability to maneuver in tight spaces, such as enclosed stairwells. As an ancillary benefit, this length may also prove to be better adapted for cleaning in confined spaces, such as closets. In a preferred embodiment, the vacuum cleaner of the present invention has an overall length of about 18 to 46 inches, and more preferably about 20 to 24 inches. In another preferred embodiment, the distance between the foregrip and the inlet nozzle is about 12 to 18 inches, and more preferably about 14 to 16 inches.

While the foregoing lengths are preferred, it may be desirable in some instances to make the vacuum cleaner longer or shorter. To obtain the benefits of the foregoing lengths yet still provide even greater ergonomics and control, embodiments of the present invention may include one or more telescoping sections. Referring now to Figures 9A to 9C one such embodiment is illustrated and described in detail.

Figures 9A and 9B illustrate a telescoping vacuum cleaner 900 in the fully-retracted and fully-extended positions, respectively. The vacuum cleaner 900 comprises a housing 902, a rear grip 906, a foregrip 930, and an inlet nozzle 904, as described elsewhere herein. The rear grip 906 and inlet nozzle 904 are telescopically attached to the housing 902, but in other embodiments only one telescoping part may be provided.

The telescoping mechanism for the rear grip 906 comprises a post 910 attached to the top end of the housing 902, and a sleeve 912 attached to the rear grip 906. The post 910 preferably is hollow to route wires 940 from the power switch 942 to the housing 902, but the power switch 942 may instead be located on the housing 902, or telescoping power leads, such as shown in U.S. Pat. No. 6,148,474 may be used. This patent is incorporated herein by reference.

A lock 914 is provided between the post 910 and the sleeve 912 to selectively prevent and allow the sleeve to slide along the post. While any telescoping lock

mechanism may be used, a preferred embodiment of the lock is shown in Figure 8C. The lock 814 comprises a pair of rollers 916 that are captured in place in openings 918 in the sleeve 912. These rollers fit into corresponding detents 920 on the post 910, and are held in place by a slider 922. In the shown position, the slider 922 holds the rollers 916 in the detents 920, thereby preventing relative movement between the sleeve 912 and post 910. When it is desired to unlock the sleeve 912 from the post 910, the slider is pressed downward against a spring 924 until the rollers 916 are free to move into a pair of recesses 926 in the slider 922, and out of the detents 920. With the rollers 916 out of the way, the sleeve 912 is free to slide along the post 910, thus allowing telescopic movement of the rear grip 906. Any means may be used to actuate the slider 922, such as a simple tab 928 that protrudes from the sleeve 912.

The inlet nozzle 904 is attached by a similar post 932, sleeve 934, and lock 936. In the case of the inlet nozzle 904, the post 932 preferably is a hollow tube that also forms a portion of the inlet air flow path 938 from the inlet nozzle 904 to the dirt receptacle (not shown). However, in an alternative embodiment, the inlet air flow path is instead formed by a flexible hose or a separate rigid telescoping tube. If it is desired to include a brushroll or other electrically-operated devices in the inlet nozzle 904, suitable telescoping electrical leads may be used in conjunction with the telescoping mechanism, wires may be provided outside the telescoping mechanism, or wires may be provided through the post 932 and sleeve 934 or a separate telescoping channel.

The foregoing telescoping arrangement allows several inches of extension at each end of the vacuum cleaner 900, which can effectively convert it from a configuration adapted to clean raised surfaces such as stairs, to a more conventional upright or stick vacuum configuration adapted to clean floors. An overall extension of about 14 to 20 inches is preferred to effectuate this conversion. As noted before, while both the rear grip 906 and inlet nozzle 904 are shown as being mounted in a telescoping manner, the desired telescoping capability may instead be provided by mounting just one of these parts on a telescoping mount.

Dyson Ex1020
Page 29

As shown in the embodiment of Figures 9A to 9C, the posts 910, 932 are attached to the housing 902, and the sleeves 912, 934 are attached to the part that is telescoped away from the housing 902. This configuration is preferred, as it allows the user to grasp the housing 902 in one hand, and grasp the inlet nozzle 904 or rear grip 906 in the other hand while simultaneously activating the respective lock 914, 936, and pull the parts apart to telescope them. The foregrip 930 provides a convenient hand hold on the housing 902 during this action. Alternatively, however, the posts 910, 912 may instead be attached to the rear grip 906 and inlet nozzle 904, respectively, the sleeves 912, 934 attached to the housing 902.

Turning now to Figure 10, another embodiment of the invention is illustrated and described. It has been found that the particular task of cleaning stairs often requires the user to stop the vacuuming process, relocated or reorient the vacuum cleaner, and then resume vacuuming. Using conventional vacuum cleaners, the users usually leave the vacuum fan running throughout this process because, for example, the power switch is remotely located (as in many canisters), not easily activated by hand (as with many upright vacuums with foot-operated power switches), or not within reach without letting go of the vacuum cleaner with one hand. As a result of this tendency to keep the vacuum motor running at all times, the stair cleaning process increases the risk of injury, and requires greater energy consumption. This excess power consumption is particularly an issue for cordless vacuum cleaners because it leads to shortened battery life.

In view of the foregoing, the present invention may also includes a power trigger 1008 located in the rear grip 1006 proximal to the expected hand location of a typical user. The power trigger 1008 comprises a momentary-on switch that completes the electrical circuit to activate the fan/motor (not shown) when it is depressed, but interrupts the circuit when it is released, thus allowing the user to deactivate the device between cleaning motions and conserve battery power. While the momentary on switch is preferred, other switch types may be used instead, such as a simple on-off switch (one having an on position and an off position), or a push switch (one that turns the circuit on and off with successive depressions).

In the embodiment of Figure 10, the power trigger 1008 is mounted in the rear grip 1006 at approximately the end of the vacuum cleaner. In this position, it may be activated by simply squeezing the rear grip 1006, regardless of whether the vacuum cleaner is positioned for cleaning horizontal surfaces or rotated 180 degrees for cleaning vertical surfaces. The power trigger 1008 is generally contained within the rear grip 1006, and may be covered by an overmolded flexible cover 1012. This cover 1012 may comprise a tacky material or otherwise have enhancing features, such as dimples 1014. Markings may be embossed or printed on the cover 1012 or elsewhere on the rear grip 1006 to alert the user to the presence of the power trigger 1008.

In the embodiment of Figure 10, the power trigger 1008 is wired into an electrical circuit with a main power switch 1010. The main power switch 1010 is shown mounted on a protrusion 1016 that extends into the loop formed by the rear grip 1006, but other locations may be used. In this embodiment, the main power lead 1018 from the power source (not shown) is attached to the first pole of the main power switch 1010. A second wire 1020 extends between the second pole of the main power switch 1010 and the first pole of the power trigger 1008. A third wire 1022 attaches the second pole of the power trigger 1008 to the remainder of the electrical circuit. In this configuration, the power trigger 1008 will only activate the device when the main power switch 1010 is on, thereby reducing the likelihood of accidental activation, and providing a backup switch to turn the device off if one switch fails.

It will be appreciated that numerous variations on this design are possible. For example, the power trigger 1008 may be located elsewhere than the rear grip 1006, and even in the foregrip (not shown), if so desired. The vacuum cleaner may also include multiple power triggers 1008 that must be activated in unison to start the fan/motor. For example, one power trigger may be located in the rear grip 1006, and another in the foregrip, which would ensure that the operator has a firm grip on the device before beginning use. Still further, the vacuum cleaner may have multiple

power triggers that separately control the fan/motor, which would provide the user with various optional hand locations in which to activate the device.

The present invention also provides a number of inlet nozzles having particular suitability for cleaning stairs or other surfaces, and which may be used with other embodiments of the invention or with conventional vacuum cleaning devices. Embodiments of these inlet nozzles are shown in Figures 11 to 13.

Referring to Figure 11, a first embodiment of an inlet nozzle 1100 comprises a brushroll chamber 1102 having a downwardly facing opening 1104 in which a rotatable brushroll 1106 is located. The brushroll 1106 comprises any rotating agitator design, such as a cylindrical spindle 1108 with a number of cleaning bristles 1110 extending radially therefrom. The brushroll 1106 is mounted to the inlet nozzle 1100 by bearings 1112 or journals. A motor 1114 is mounted in the inlet nozzle 1100 to drive the brushroll 1106 through a belt 1116.

The inlet nozzle 1100 also includes one or more angled cleaning spinners 1118, which are mounted to rotate about one or more axes that are tilted with respect to the rotary axis of the brushroll 1106. In the shown embodiment, two angled cleaning spinners 1118 are provided, one on each end of the brushroll 1106. Each spinner 1118 includes a set of radially-extending cleaning bristles 1120. The spinners 1118 are inclined at about 45 degrees with respect to the brushroll axis, and each is mounted to the brushroll chamber 1102 by a bearing 1122. Each spinner 1118 includes a gear 1124, which is driven by a corresponding gear 1126 on each end of the brushroll 1106. Alternatively, the gears 1124, 1126 may be replaced by rubber or other surfaces that drive one another by friction, the spinners 1118 may have their own motors and/or belt drives, or the spinners 1118 may be otherwise driven.

The inlet nozzle 1100 includes a vacuum tube 1128 that may be attached to a vacuum source. The vacuum tube enters the brushroll chamber 1102 at an inlet opening 1130. In use, the inlet nozzle 1100 of Figure 11 is applied to stair treads and risers such that the brushroll 1106 cleans the main surfaces, and the spinners 1118 reach into the tight space at the junction between the treads and risers. The working

air flows into the opening 1104, past the brushroll 1106 and spinners 1118, and into the inlet opening 1130 to be cleaned by the attached vacuum cleaner.

Another embodiment of an inlet nozzle of the present invention is shown in Figures 12A and 12B. Figure 12A is a cut away side view of an inlet nozzle 1200 shown along reference line II-II of Figure 12B, and Figure 12B is a cut away front view of the inlet nozzle 1200 shown along reference line I-I. According to this embodiment, the inlet nozzle 1200 comprises a tubular grip 1202 having a vacuum passage 1204 extending therethrough. The grip 1202 terminates at one end at an opening 1206 for attaching to a vacuum cleaner, and at the other end to a cleaning head 1208.

The cleaning head 1208 is mounted to a boss 1210 located at the end of the grip 1202. The boss 1210 is has a cylindrical exterior profile, with a portion of the profile being removed to form a boss opening 1228 that opens into the vacuum passage 1204. The cleaning head 1208 is retained in the axial direction between two flanges 1212 and 1214. As such, the cleaning head 1208 can be rotated about the boss 1214, but the flanges 1212 and 1214 prevent axial movement or inadvertent removal of the cleaning head 1208.

The cleaning head 1208 comprises two generally parallel trapezoidal plates 1216 and 1218 that are held together by sidewalls 1220 and/or interior walls 1222. The sidewalls 1220 and interior walls 1222 are positioned and shaped to form a first nozzle opening 1224 at one end of the cleaning head 1208, and a second nozzle opening 1226 at the opposite end of the cleaning head 1208. Each nozzle opening 1224, 1226 comprises an air passage, formed between the plates 1216, 1218 and interior walls 1222, that leads to the rotational center of the cleaning head 1208. As such, the first and second nozzle openings 1224, 1226 can be selectively placed in communication with the vacuum passage 1204 by rotating the cleaning head 1208 to align the desired nozzle opening air passage with the boss opening 1228.

As best shown in Figure 12B, in a preferred embodiment, the first nozzle opening 1224 comprises a relatively small opening formed by generally converging sidewalls 1220. This nozzle opening is suited to cleaning in tight spaces, such as the

junction between stair risers and stair treads. The second nozzle opening 1226 is wider and flat, and is more suited to cleaning larger areas. While these two nozzle opening shapes are preferred, it will be appreciated that other shapes may be provided, and more nozzle openings may be formed in the cleaning head. For example, the first nozzle opening 1224 may be more pointed, rather than being rounded, or the plates 1216, 1218 may be formed as curved surfaces, rather than being flat.

Referring now to Figure 13, still another inlet nozzle 1300 of the present invention comprises a cleaning head 1302 that is pivotally attached to a vacuum tube 1304 by a ball-and-socket joint 1306. In this embodiment, the cleaning head 1302 comprises a generally rectangular body having a number of cleaning bristles 1308 extending downwardly from the outer perimeter of the head 1302. A number of wheels 1310 or skids (not shown) may be provided to prevent the cleaning head 1302 from coming into direct contact with the surface being cleaned.

The ball-and-socket joint 1306 is formed by a generally spherical end portion 1312 of the vacuum tube 1304, which is contained within a generally spherical socket formed between a boss 1314 on the cleaning head 1302, and a cap ring 1316 that is removably attached to the boss 1314 to capture the spherical end portion 1312 in place. The cap ring 1316 may be attached in any manner, such as by threaded fasteners 1318 that pass through the cap ring 1316 and engage threaded holes (not shown) in the boss 1314. Using this construction, the vacuum tube 1304 can be rotated relative to the cleaning head 1302 in any direction until the vacuum tube 1304 contacts the cap ring 1316. If desired, one or more springs may be provided to bias the cleaning head 1302 into a particular position, or travel stops may be provided to limit rotation in certain directions.

Another embodiment of the invention is shown in Figures 14A and 14B. This embodiment comprises a hybrid stair cleaning nozzle/vacuum cleaner 1400 that is particularly suited for cleaning stair treads and risers. The vacuum cleaner 1400 generally comprises a downwardly directed floor nozzle 1402 having one or more brushrolls 1404 rotatably disposed therein. A motor 1406 and belt 1408 are provided

to drive the brushrolls 1404. The floor nozzle 1402 is attached to a vacuum housing 1410 in which a dustcup 1412 and a fan/motor 1414 are located. A rigid connection may be provided between the floor nozzle 1402 and the housing 1410, but it is preferred to use a flexible or pivotable connection, such as the shown bellows-type connection 1418. Any type of dust separator, such as a dust bag or cyclone, may be used. In the embodiment of Figures 14A and 14B, the dustcup 1412 has a generally planar filter 1416 to clean the air passing therethrough. One or more air conduits (not shown) pass from the floor nozzle 1402 to the dustcup 1412 to convey dust-laden air thereto.

A handle 1420 is attached to the top of the housing 1410 for use in guiding the vacuum cleaner 1400 across the floor or on stairs. The use of the bellows connection 1418 or other flexible joint allows the user to hold the device at a variety of angles relative to the floor or stair treads as he or she cleans them.

The vacuum cleaner 1400 also includes a riser nozzle 1422, which is attached to the side of the device, preferably at one end of the brushroll 1404. The riser nozzle comprises a generally vertically-oriented inlet conduit having an inlet opening 1424 facing to the side of the housing 1410. In this position, the vertical inlet opening 1424 can apply suction to clean stair risers without having to rotate the vacuum cleaner or lift the floor nozzle 1402. A separate conduit 1426 may lead from the riser nozzle 1422 to the dustcup, or it may share a common conduit or conduits with the floor nozzle 1402. If desired, the bottom end of the riser nozzle 1422 may include a downward-facing opening 1428, as shown in Figure 14A, to provide crevice cleaning in the corner between stair treads and risers.

In anticipation that the angle between some stair treads and risers may be less than 90 degrees, the riser nozzle 1422 may be attached to the housing 1410 or floor nozzle 1402 by a pivot or other flexible joint that allows it to tilt towards or away from the housing 1410. In such a case, the separate air conduit 1426 may be formed by a flexible hose to allow such movement.

It is also anticipated that it will not be desirable to always apply suction to the riser nozzle 1422. As such, the riser nozzle 1422 preferably includes a valve to block

the vertical inlet opening 1424, or otherwise impede or stop the flow of working air to the riser nozzle 1422. For example, as shown most clearly in the inset to Figure 14B, in one embodiment the riser nozzle 1422 includes a rotating valve 1430 that can be turned to block the vertical inlet opening 1424. A knob 1432 is provided on the outside of the riser nozzle 1422 to move the valve 1430 in the directions shown by the two-headed arrow. In a variation of this embodiment, the knob 1432 may be replaced by a lever arm having a spring that biases the lever to place the valve 1430 in the closed position. The lever is positioned outboard of the riser nozzle 1422, and when the vacuum cleaner 1400 is placed close enough to a stair riser, contact with the riser presses the lever towards the vacuum cleaner 1400 and opens the valve 1430. This provides automatic operation of the riser nozzle 1422.

Various alternatives to the embodiments of Figures 14A and 14B are envisioned. For example, rather than providing the device as a self-contained vacuum cleaner 1400, the floor nozzle 1402 and riser nozzle 1422 may be provided as a separate assembly that can be attached to vacuum cleaners of the present invention or to conventional vacuum cleaners. Furthermore, other valves and actuating arrangements, both automatic and manual, may be used instead, as will be appreciated by those of ordinary skill in the art in view of the present disclosure and with routine experimentation with the inventions described herein.

Referring now to Figure 15, another embodiment of the present invention comprises another vacuum cleaner 1500. Vacuum cleaner 1500 comprises a housing 1501, a nozzle assembly 1502 located at a first end of the housing 1501, and a generally toroidal-shaped rear grip 1503 located at a second end of the housing 1501. The vacuum 1500 also comprises a generally toroidal-shaped foregrip 1504 located in the mid-section of the housing 1501, between the nozzle assembly 1502 and the rear grip 1503.

Referring to Figure 16, one convenient feature of this vacuum 1500 is that the consumer can easily assemble it, preferably without tools. Assembly of this embodiment 1500 only requires the nozzle assembly 1502 and the rear grip 1503 to be attached to the housing 1501 by snap engagement. Requiring some assembly by

the consumer saves money for the manufacturer in shipping costs, because the device can be placed in a smaller package, this also benefits the consumer, because the smaller package is easier to handle and take home from the store.

Referring back to Figure 15, the housing 1501 generally comprises a main body 1505, a fan/motor assembly 1506, a fan/motor cover 1507, and a dustcup assembly 1508. The housing 1501 further comprises means to power the fan/motor assembly 1506 such as a power switch 1509 and power supply cord 1510 or batteries (not shown). The nozzle assembly 1502 serves as an inlet for a dirt and dust laden airstream coming into the vacuum 1500 during operation and generally comprises an inlet nozzle 1511 having a brush 1512, a nozzle connector 1513 and an inlet tube 1514.

The body 1505 comprises a dustcup chamber 1519 and a fan/motor housing 1520, which are aligned along the vacuum centerline 1537. Attaching the fan/motor cover 1507 to the main body forms the fan/motor housing 1520. The fan/motor assembly 1506 is positioned in the fan/motor housing 1520 and the dustcup 1522 is removably installed in the dustcup chamber 1519. A dividing midwall 1518 is positioned between the chamber 1519 and the fan/motor housing 1520 and includes openings 1536 or vents to allow air to pass from the dustcup 1522 to the fan/motor assembly 1506. The fan/motor housing 1520 also comprises vents 1538 in the sidewalls, which form an exhaust path for the fan/motor assembly 1506. A pre-motor filter 1545 may be located to cover the vent opening 1536 and attached in any known way, such as by being fit into ribs 1546 in front of the opening 1536. The inlet tube 1514 is attached to the housing 1501 at an end adjacent to the dustcup chamber 1519 and forms an air passage into the dustcup chamber 1519. The rear grip 1503 is attached at the end opposite the inlet tube 1514 to one or both of the main body 1505 or the fan/motor cover 1507.

The dustcup assembly 1508 comprises a dustcup 1522, a filter assembly 1523 and a latch assembly 1524. The dustcup 1522 comprises one or more sidewalls 1525 that form an open top 1526 and taper to an inlet 1528 at the bottom of the dustcup 1522. The inlet 1528 is generally smaller than the open top 1526 and has one or more

inlet sidewalls 1527 that extend past the dustcup sidewalls 1525 and may also extend into the dustcup interior. The dustcup 1522 provides storage of collected refuse and debris, and may comprise a bag chamber, a non-cyclonic cup, or a cyclonic separation chamber. A generally frusto-conical filter assembly 1523 extends into the dustcup 1522. The filter assembly 1523 comprises a filter 1529 and a frame 1530. The frame 1530 sealingly engages with the open top 1526 and is held in place by the attachment of the dustcup 1522 to the body 1505.

The dustcup assembly 1508 is held in the dustcup chamber 1519 by the inlet sidewalls 1527 and the latch assembly 1524. The inlet sidewall 1527 telescopically fits into or around the inlet tube 1514, which fluidly connects the dustcup assembly 1508 to the nozzle assembly 1502 and prevents the dustcup inlet 1528 from any forward or lateral movement. The inlet 1528 may alternatively be held in abutting relation to the inlet tube 1514 by a pocket (not shown) in the dustcup chamber 1519, into which the end of the dustcup assembly 1508 fits. A latch assembly 1524 secures the dustcup top 1526 to the vacuum housing 1501, and prevents the dustcup top 1526 from any forward or lateral movement. The latch assembly 1524 preferably comprises a spring-loaded slider 1531 with an associated finger tab 1532 that fits within a housing 1562. The slider 1531 mates with an open notch (not shown) on the housing 1501 to lock the two together until biased away from the engagement by applying a force to the finger tab 1532. The dustcup assembly 1508 is prevented from rear movement by the chamber sidewall 1515 and is prevented by any movement along the vacuum centerline 1537 by its relative position between the inlet tube 1514 and the midwall 1518. The dustcup inlet 1528 is installed by placing the inlet 1528 over or in the inlet tube 1514, rotating the dustcup assembly 1508 back in line with the rest of the housing 1501, and pressing the latch assembly 1524 into engagement with the notch (not shown).

The fan/motor assembly 1506 preferably comprises a fan/motor 1539, a sound insulating barrier 1540, a motor mounting ring 1541 and a rear bushing 1542. The motor mounting ring 1541 is generally round with a central opening, allowing the airflow path of the vacuum 1500 to pass therethrough. The mounting ring 1541

and bushing 1542 are held in place in the fan/motor housing 1520 by support ribs, interior pockets, or other conventional means. The mounting ring 1541 retains a first end of the fan/motor 1539 centered generally about the vacuum centerline 1537, to align the fan/motor inlet 1544 with the midwall opening 1536. The mounting ring 1541 and bushing 1542 comprise an elastomeric material to help reduce any vibrations that may otherwise be imparted to the vacuum operator. The sound insulating barrier 1540 preferably comprises a foam material that is wrapped around the fan/motor 1539 to reduce its sound level, act as a post-motor filter, and/or block the operator's view of the fan/motor 1539.

Referring now to Figures 17A-19, the foregrip 1504 provides one of two main gripping surfaces for the vacuum 1500 and comprises a central hub 1547, a toroidal gripping surface 1548, and one or more support spokes 1549 extending from the hub 1547 to hold the gripping surface 1548 in place. The foregrip 1504 comprises a top portion 1504a and a bottom portion 1504b. The two portions 1504a, 1504b may be assembled by any means known in the art, and are preferably assembled prior to shipment to the purchasing consumer. Suitable means of assembly of the two parts 1504a, 1504b may include, for example, ultrasonic welding, snap engagement, threaded fasteners, and so on.

As shown in Figures 17A and 17B, the foregrip 1504 is assembled to housing 1501 by sliding the hub 1547 over a similarly shaped mounting surface 1517 on the housing 1501. The surface 1517 is shown in this embodiment as being formed by the main body 1505 and the fan/motor cover 1507, but may instead be formed by other parts. The hub 1547 and mounting surface 1517 may be circular or may instead comprise matching non-circular shapes or matching ribs and slots to prevent relative rotation and/or assure proper alignment during installment. The mounting surface 1517 has detents 1521, and the hub 1547 has flexible tabs 1534 with protrusions 1534a that align with the detents 1521. When slid over the mounting surface, the tab protrusions 1534a lock into the detents 1521 to hold the foregrip 1504 in place. The shown embodiment is particularly advantageous because the foregrip hub 1547 can also be used to hold the fan/motor cover 1507 on the main body 1505. However, the

fan/motor cover 1507 may also or alternatively be attached by connecting means, such as screws 1561 (see Figure 15).

As shown in Figure 19, the foregrip 1504 may be adapted to provide the additional function of being a power cord retainer. To this end, the foregrip 1504 further comprises a groove 1550 that circumnavigates the gripping surface 1548, and in which the power supply cord 1510 fits. In addition, the plug 1551 preferably comprises one or more ears 1552 that allow the plug 1551 to be secured in the groove 1550 by friction or snap engagement during vacuum idle time.

The foregrip 1504 may also provide an exhaust path through the foregrip hub 1547 and spokes 1549. In this variation, the fan/motor housing sidewalls would not have openings 1538 to exhaust the fan/motor assembly 1506 as discussed herein. Instead, an airflow path may be provided through the attachment surface 1517, hub 1547, spokes 1549, and groove 1550 to exhaust air from the fan/motor assembly 1506.

Referring back to Figure 16, the body 1505 further comprises a rear grip receiver 1553 located at the second end of the housing 1501. The rear grip receiver 1553 comprises a generally round tube located on the housing opposite the inlet tube 1514. The receiver may extend outward from the housing, into the housing, or both, and provides a receptacle to telescopically attach the rear grip 1503. The receiver 1553 is preferably parallel to the vacuum centerline 1537, but may be offset or angled relative thereto. The end of the receiver 1553 that is distal from the body further comprises a square-retaining collar 1554. The rear grip receiver 1553 may be integrally formed with the body 1505, a separate piece attached to the body 1505, or any combination thereof.

The rear grip 1503 provides the second of two main gripping surfaces for the vacuum 1500, and comprises a generally toroidal shaped gripping surface 1555 and an attachment tube 1556 having a square shoulder 1557 extending from the gripping surface 1555. The attachment tube 1556 is telescopically received within the rear grip receiver 1553 and secured in place by snap engagement. The snap-fit attachment preferably comprises an opening 1535, shown in Figure 15, in the receiver 1553 and a

cantilevered tab 1558 in the rear grip tube 1556. The square shoulder 1557 is received in the receiver collar 1554 to prevent rotation of the rear grip 1503, and also prevents the rear grip 1503 from extending too far into the receiver 1553.

Referring to Figures 20A and 20B, a variation of this embodiment dispenses with the square shoulder 1557 and retaining collar 1554 and instead provides ribs 1559 on the attachment tube 1556 and corresponding slots 1560, shown in Figure 20B, in the receiving tube 1553. The ribs 1559 are received in the slots 1560 as a means to prevent the rear grip 1503 from rotating. Alternatively, the attachment tube 1556 and the receiver 1553 may have an oval shaped cross-section or possess other keying features to prevent the rear grip 1503 from rotating about the vacuum centerline 1537. Conversely, the rear grip 1503 may possess a feature to allow the operator to rotate the grip 1503 about the vacuum centerline 1537, allowing the operator to place the grip 1503 in a personalized comfortable position.

Referring now to Figures 21-23, another embodiment 1600 of a vacuum cleaner comprises a pivoting rear grip 1601. The vacuum cleaner is the same as to the previous embodiment, with the exception that the rear grip 1601 pivots about an axis 1602 perpendicular to the vacuum centerline 1603. The pivoting rear grip 1601 is preferably capable of being locked in at least two positions. One position is an in-use position, where the major plane of the grip 1601 is generally parallel to the vacuum centerline 1603. Another position, that is a storage position, places the major plane of the grip 1601 at an angle that is about 60° to 70° offset from the vacuum centerline 1603. This angle is shown as α in Figure 21. This arrangement provides a built in structural support to allow the vacuum 1600 to stand during idle time, making storage easier as well. The angle α preferably is chosen to provide the vacuum 1600 with sufficient stability while it is standing in storage to prevent it from easily tipping over. This angle will depend largely on where the vacuum's center of gravity is located and the shape and size of the rear grip 1601. In a preferred embodiment, this angle is about 60° to 70°.

To provide one embodiment of a pivoting rear grip 1601, the rear grip receiver 1605 comprises top 1605a and bottom 1605b portions that form a circular

aperture 1606, as shown in Figures 22A and 22B. The top portion 1605a is preferably integrally formed in the fan/motor cover 1607, and the bottom portion 1605b is preferably integrally formed in the body 1608. When the fan/motor cover 1607 is attached to the body 1608, the two portions 1605a, 1605b align about an axis 1602 that is perpendicular to the vacuum centerline 1603. It is about this axis 1602 that the rear grip 1601 will pivot. A gap 1609 is provided between the two receiver portions 1605a, 1605b. The rear grip attachment tube 1610 extends from the gripping surface 1611 and forms a circular aperture 1612, that is coplanar with the rear grip 1601, and sized to fit within the gap 1609 between the receiver portions 1605a, 1605b, as shown in Figure 22B.

To assemble the rear grip 1601 to the housing 1604, the attachment tube 1610 is inserted in the gap 1609 between the two halves 1605a, 1605b of the receiver 1605 such that the three parts 1605a, 1605b, 1610 are collinear. A pin 1613 is provided through the parts to pivotally secure the attachment tube 1610 to the receiver 1605. Alternatively, the pin 1613 may be integrally formed with the attachment tube 1610, requiring the pin 1613 to be aligned with the two receiver halves 1605a, 1605b during the assembly of the body 1608 and fan/motor cover 1607. The pin 1613 may also be a fastener that joins the two halves 1605a, 1605b together.

The vacuum 1600 also preferably incorporates a detent system (not depicted) to assist the operator in finding the two handle positions and locking the handle into these positions. While it is not strictly necessary to be able to lock the handle in the pivoted storage position, a lock preferably is provided to lock the handle in the used position.

Referring now to Figure 23, another feature of this embodiment is an integrated cord storage and release mechanism. The rear grip 1601 further comprises a cord hook 1614 extending from the attachment tube 1610 and generally coplanar with the rear grip 1601. The housing 1604 comprises a corresponding cord hook 1615 near the nozzle assembly 1616. When the rear grip 1601 is in the storage position, the grip hook 1614 extends away from the housing 1604 and provides a

surface for the power cord 1617 to maintain tension against as it is wrapped about the grip hook 1614 and the housing hook 1615.

When the rear grip 1601 is pivoted into the in-use position, the grip hook 1614 tucks into a groove 1618 provided in the vacuum body. When the grip hook 1614 is tucked away, tension is released from the power cord 1617 and it can easily be removed from the housing hook 1615.

Referring now to Figures 24 –27, an example of a preferred inlet assembly 1700 is illustrated. This inlet assembly 1700 can be used with any combination of the embodiments described herein. The preferred inlet assembly 1700 comprises an inlet nozzle 1701, a nozzle connector 1702, and an inlet tube 1703 located on the housing 1704. The nozzle connector 1702 is secured to the inlet tube 1703 and the inlet nozzle 1701 is selectively secured to the connector 1702. The inlet nozzle 1701 is secured to the connector 1702 in at least one position, but preferably in two or more different axial and/or radial positions.

The inlet tube 1703 comprises a hollow tube 1705 with an aperture 1706 on the side. It is preferably integrally formed with the housing 1704 and provides fluid communication between the vacuum dust receptacle (not shown) and the rest of the nozzle assembly 1700.

Referring to Figure 25, the connector 1702 is a hollow tube that preferably comprises an oval shaped cross-section to prevent rotation, but may comprise other anti-rotation features, or be allowed to rotate, if desired. The connector 1702 is divided into two portions by a collar 1707: an inlet portion 1708 and an outlet portion 1709. The outlet portion 1709 is telescopically received within or around the inlet tube 1703 and includes a cantilever tab 1710 that fits into the inlet tube aperture 1706. The tab 1710 and aperture 1706 prevent the connector 1702 from backing out of the inlet tube 1703. The inlet portion 1708 of the connector 1702 is telescopically received within the nozzle 1701 and comprises a flexible nozzle-attaching tab 1711 that corresponds to one or more apertures 1712 in the nozzle 1701 to secure the nozzle 1701 to the connector 1702. Preferably, the operator can depress this tab 1711 to remove the nozzle 1701 from the connector 1702, or move the nozzle 1701 between

multiple axial or radial positions on the connector 1702. If multiple radial positions are desired, then the inlet portion 1708 should be given a round profile to allow relative rotation between the parts. The collar 1707 prevents the connector outlet 1709 from sliding too far into the inlet tube 1703 and prevents the connector outlet 1708 from sliding too far into the nozzle 1701.

Referring to Figure 26 and 27, the inlet nozzle 1701 comprises an outlet duct 1713 and an intake duct 1714. The outlet duct 1713 comprises the outlet 1713a for the inlet nozzle 1701 and the intake duct 1714 comprises the inlet 1714a for the inlet nozzle 1701. The outlet duct 1713 comprises a proximal end that is adjacent to receive the connector 1702, and a distal end near the intake duct 1714. The outlet duct 1713 has an oval cross-section to match the oval cross-section of the connector 1702, but round cross-sections may be used if relative rotation is desired. In a preferred embodiment, the outlet duct 1713 accounts for about 50% to 75% of the inlet nozzle 1701 length. The interior circumference of the outlet duct 1713 is slightly larger than the outer circumference of the connector 1702, allowing the connector 1702 to be telescopically received within the outlet duct 1713. The outlet duct 1713 also comprises one or more apertures 1712 to accept the connector's nozzle attaching tab 1711. These apertures 1712 allow the operator to selectively fix the inlet nozzle 1701 on the connector 1702 in a collapsed, or extended positions, which are shown in Figures 27A and 27B respectively.

The intake duct 1714 comprises an opening that forms the inlet nozzle inlet 1714a. While any shape may be chosen for the nozzle inlet 1714a, it is preferably about twice the width and half the height of the outlet duct 1713 and forms a generally flattened slot. The nozzle inlet 1714a may have a serrated edge 1717 on at least a portion of its opening 1715 to assist in maintaining a consistent airflow during vacuuming operations. The inlet 1714a may also comprise a brush 1718 to assist in pulling lint and other debris from carpeted surfaces. The brush 1718 may comprise felt or tufts of natural or artificial fibers. The inlet nozzle 1701 may be shaped with a smooth transition between the intake duct 1714 and the outlet duct 1713. Alternatively, as shown in the depicted embodiments, the cross-sectional shapes of

the intake and outlet ducts 1714, 1713 may overlap, such that the intake duct 1714 includes a protrusion 1716 that can receive the connector 1702 and allow greater collapsibility.

Referring now to Figures 28 and 29, the foregoing embodiments of the invention provide a particular benefit in that they can be placed in a relatively small and compact package 1800. The vacuum housing 1801 is generally oval shaped, and shipped with the foregrip 1802 attached. Therefore, the vacuum 1803 can be packaged very compactly in a carton 1804 that is just wider than the foregrip 1802 diameter and is just taller than the housing 1801 length as measured along the centerline 1805. The detached rear grip 1806 can then be placed around the housing 1801 on top of the foregrip. Placing the housing 1801 and grips 1802, 1806 in a rectangular carton 1804 leaves some empty volume 1807 in the carton 1804. The various accessories that come with a vacuum cleaner may efficiently occupy this volume 1807. Examples of such accessories include the inlet nozzle assembly 1808, the power cord 1809, the owner's guide and product warranty information 1810, and possibly spare dust bags or filters (not shown). To keep the vacuum from being damaged during shipment to consumers and retail outlets, expanded polystyrene (EPS) foam pads 1811, 1812 or other packaging materials are preferably supplied at the top and bottom ends of the carton 1804.

While the embodiments described herein are preferred, these preferred embodiments are not intended to limit the scope of the invention. Also, many additional variations of the embodiments described herein will be apparent to those of ordinary skill in the art in view of the present disclosure and with practice of the invention. Furthermore, while the foregoing features of the invention, such as the foregrip, cleaning nozzles, and so on, have been described together as contributing to enhanced vacuum cleaner ergonomics and control and improved cleaning of stairs and other elevated or vertical surfaces, it will be appreciated that these features have separate utility and inventiveness on their own, and are not all required to be used together in every embodiment of the invention. As such, the present invention includes embodiments in which the features described herein are used individually

or in various other inventive combinations. Such alternative embodiments and combinations of the various features herein are within the scope of the present invention, which is limited only by the appended claims.

We Claim:

1. A vacuum cleaner comprising:
   a generally elongated housing having a first housing end and a second housing end;
   a rear grip located at the first housing end;
   an air inlet located at the second housing end;
   a vacuum fan located within the housing;
   a motor located within the housing and adapted to drive the vacuum fan to draw a working air flow into the air inlet;
   a dirt receptacle operatively associated with the housing and adapted to remove particles from the working air flow; and
   one or more foregrips located on the housing between the rear grip and the air inlet, the one or more foregrips being adapted to provide a user with multiple hand positions around the perimeter of the housing.
2. The vacuum cleaner of claim 1, wherein the rear grip is movable with respect to the housing.
3. The vacuum cleaner of claim 1, wherein the rear grip is attached to the housing by a telescoping grip member.
4. The vacuum cleaner of claim 1, wherein the air inlet is attached to the housing by a telescoping inlet member.
5. The vacuum cleaner of claim 1, wherein the rear grip is attached to the housing by a telescoping grip member, and the air inlet is attached to the housing by a telescoping inlet member.
6. The vacuum cleaner of claim 1, wherein the rear grip comprises a loop.
7. The vacuum cleaner of claim 6, further comprising a power switch disposed inside the loop.
8. The vacuum cleaner of claim 7, wherein the power switch is located on a protrusion extending into the loop.
9. The vacuum cleaner of claim 1, wherein the dirt receptacle comprises a dust bag.
10. The vacuum cleaner of claim 1, wherein the dirt receptacle comprises a filter.

11. The vacuum cleaner of claim 1, wherein the dirt receptacle comprises a cyclone separator.
12. The vacuum cleaner of claim 1, wherein the dirt receptacle forms structural portion of housing, and the air inlet is attached to dirt receptacle.
13. The vacuum cleaner of claim 1, wherein the dirt receptacle is selectively positionable in a pocket formed in the housing.
14. The vacuum cleaner of claim 1, wherein the one or more foregrips comprise a loop that extends around the housing.
15. The vacuum cleaner of claim 14, wherein the loop extends entirely around the housing.
16. The vacuum cleaner of claim 14, wherein the housing comprises one or more depressions located radially inward of the loop and adapted to provide additional clearance for a user's hand.
17. The vacuum cleaner of claim 14, wherein the loop comprises a circumferential channel adapted to receive at least a portion of a power cord attached to the vacuum cleaner.
18. The vacuum cleaner of claim 1, wherein the one or more foregrips comprise at least one grip protruding radially from the housing.
19. The vacuum cleaner of claim 1, wherein the one or more foregrips are movable with respect to housing.

Fig. 1

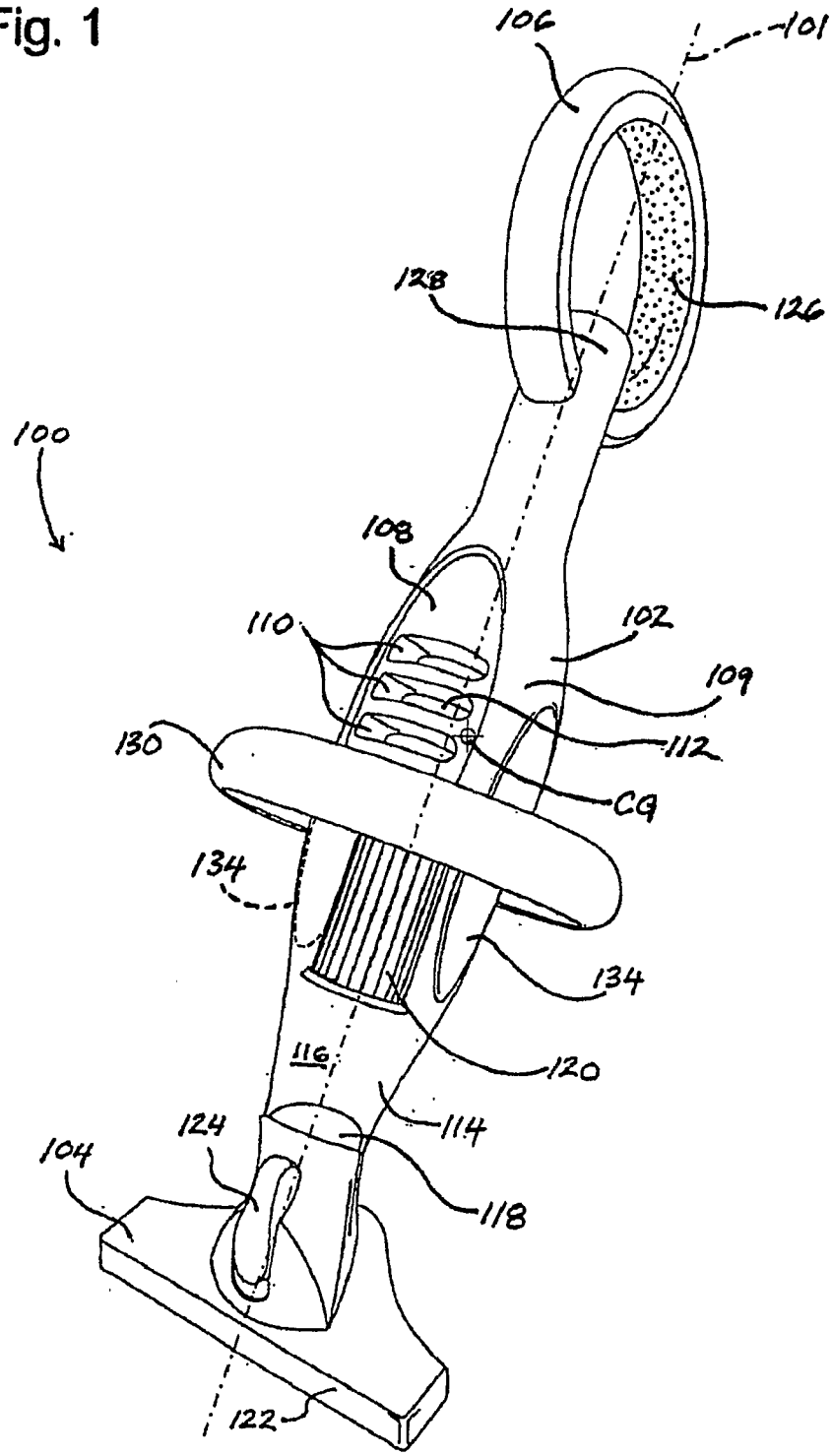
106
101
128
126
100
108
110
102
109
112
130
CG
134
134
116
120
114
124
104
118
122

Fig. 2A

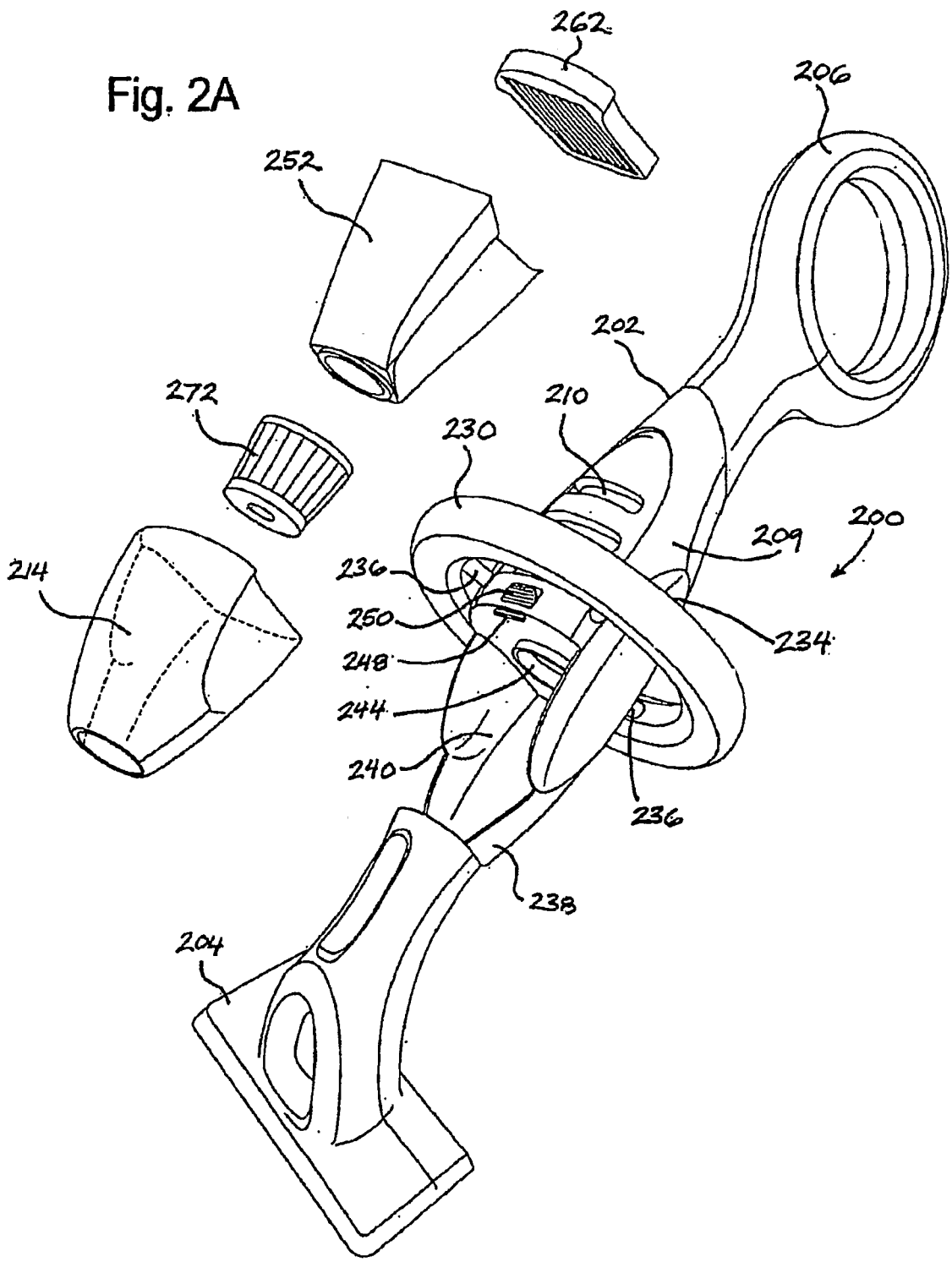
262
206
252
202
272
210
230
200
209
214
236
250
234
248
244
240
236
238
204

Fig. 2B

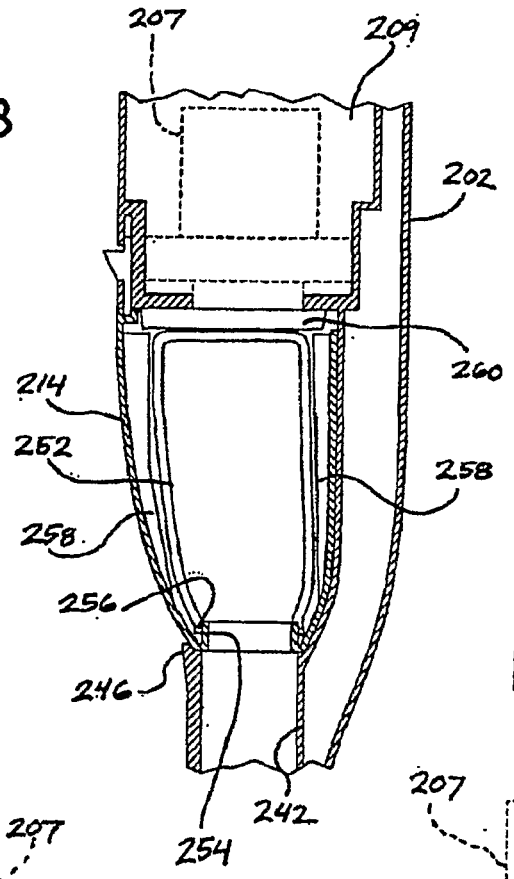

Fig. 2C

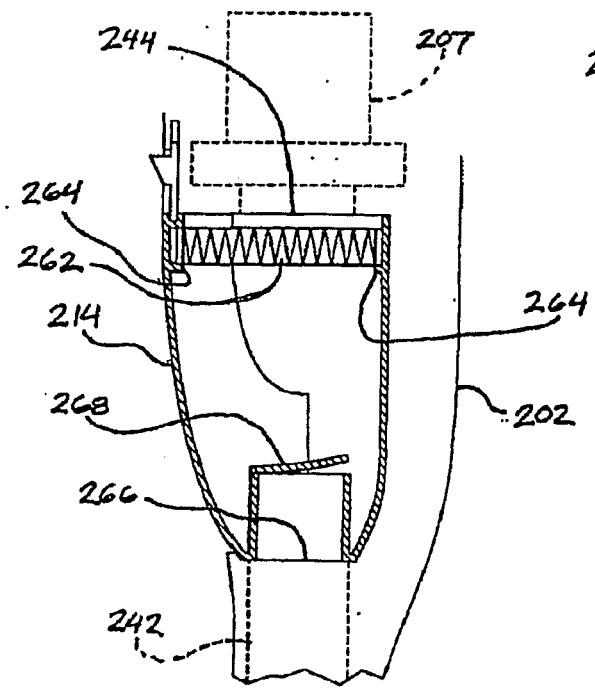

Fig. 2D

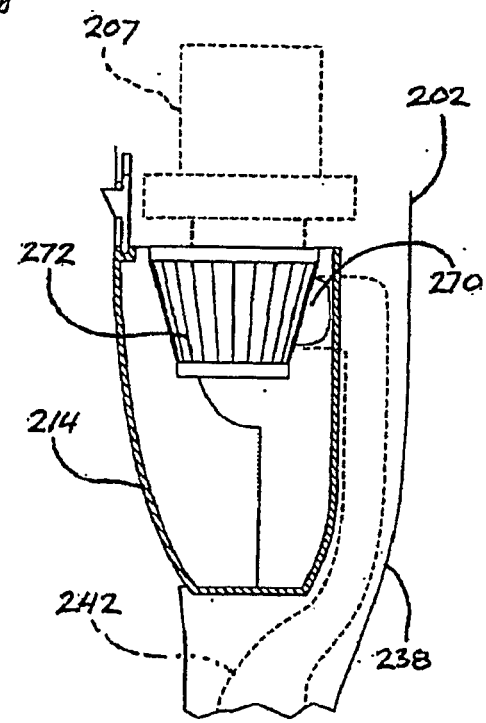

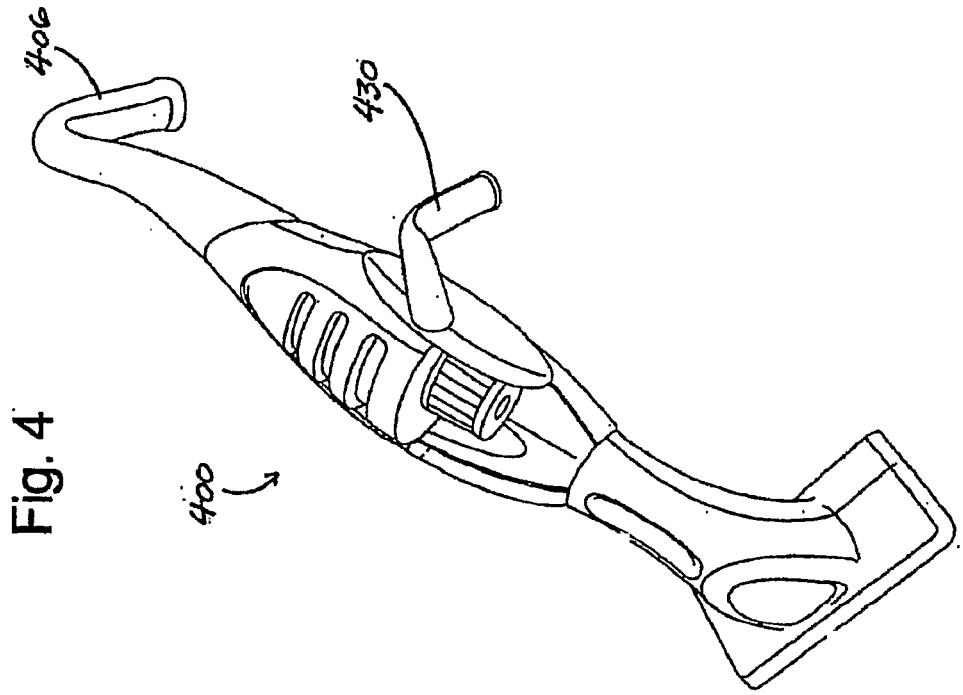

Fig. 4

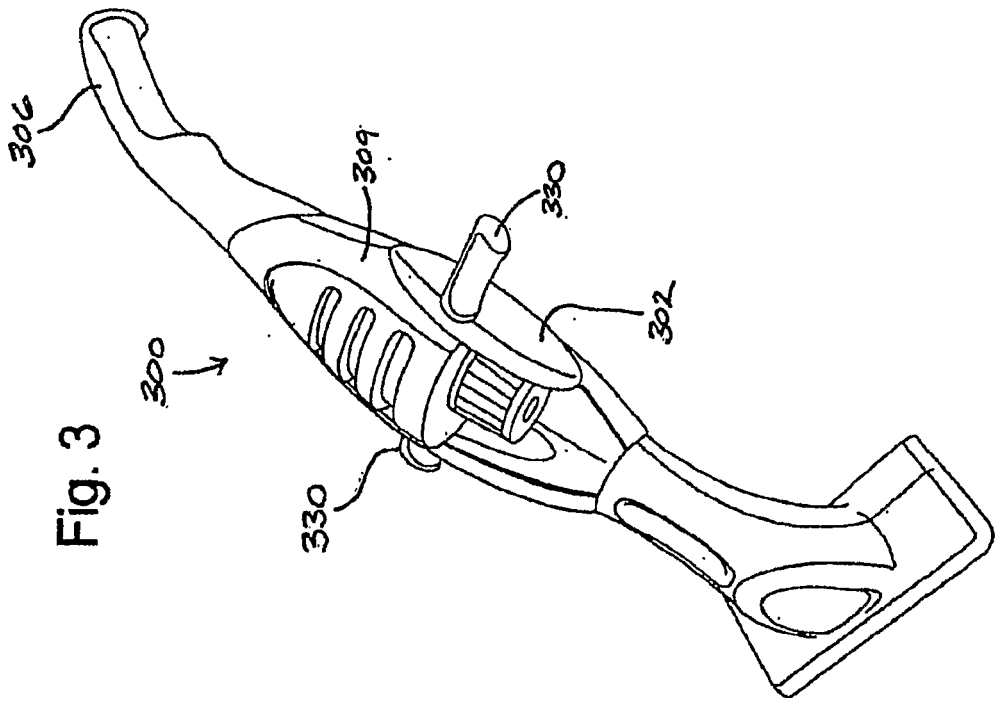

Fig. 3

Fig. 5

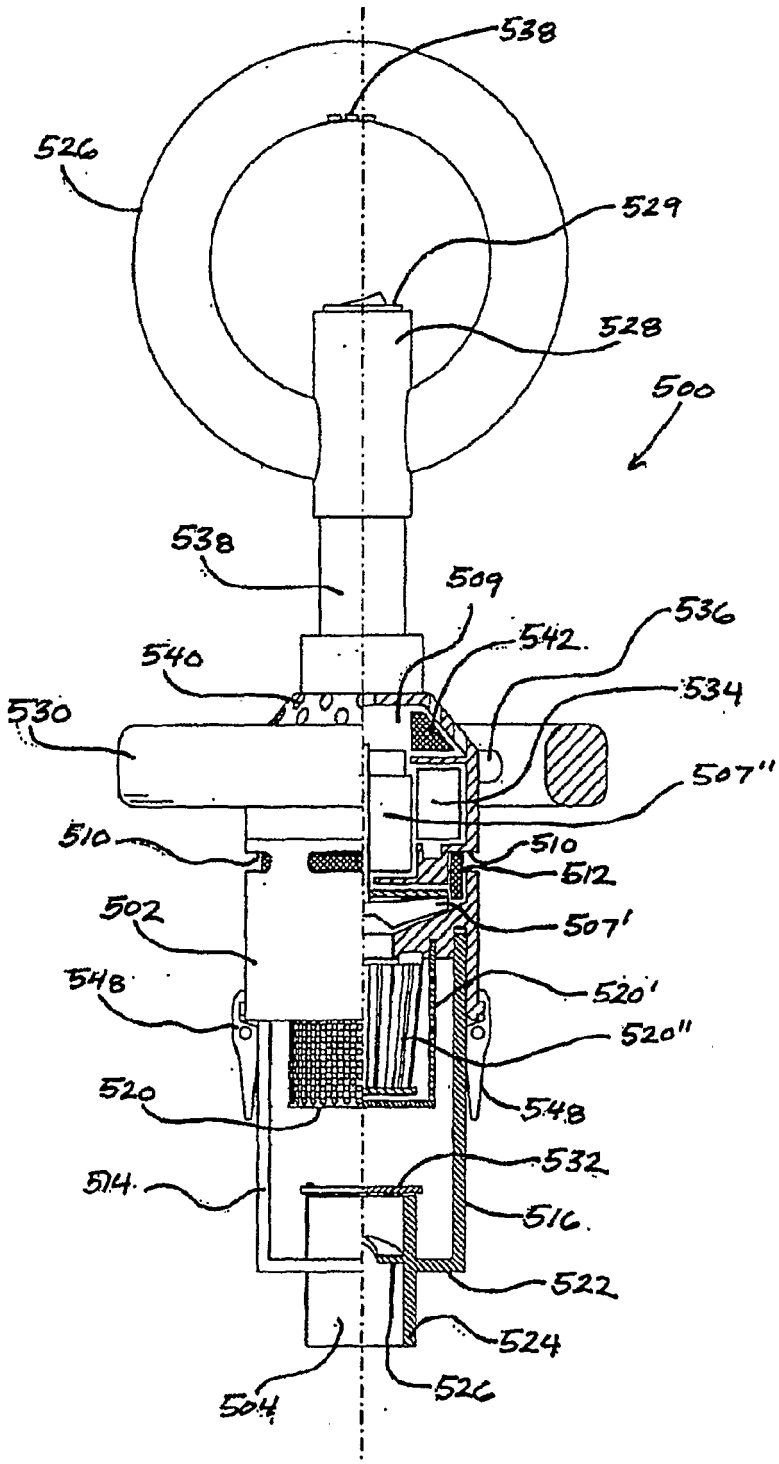
538
526
529
528
500
538
509
536
542
540
534
530
507''
510
510
512
502
507'
548
520'
520''
520
548
532
514
516
522
524
504
526

Fig. 6

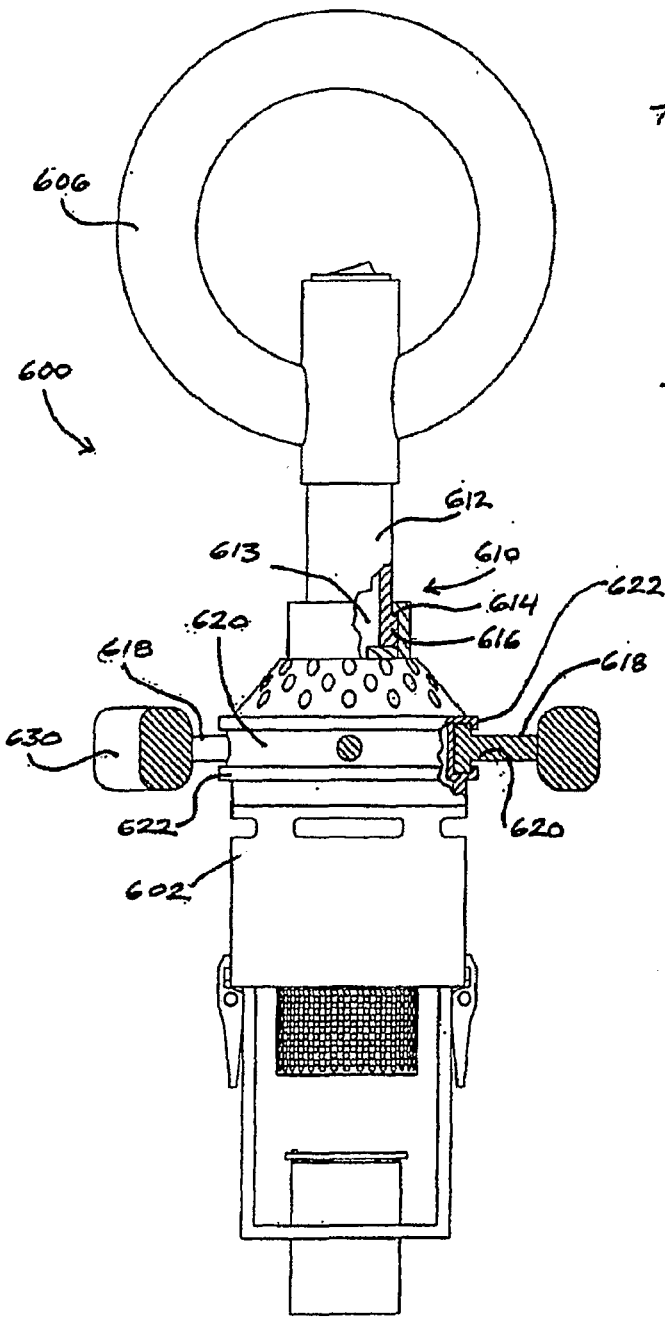
606
600
612
613
610
614
616
622
620
618
618
630
622
620
602

Fig. 7

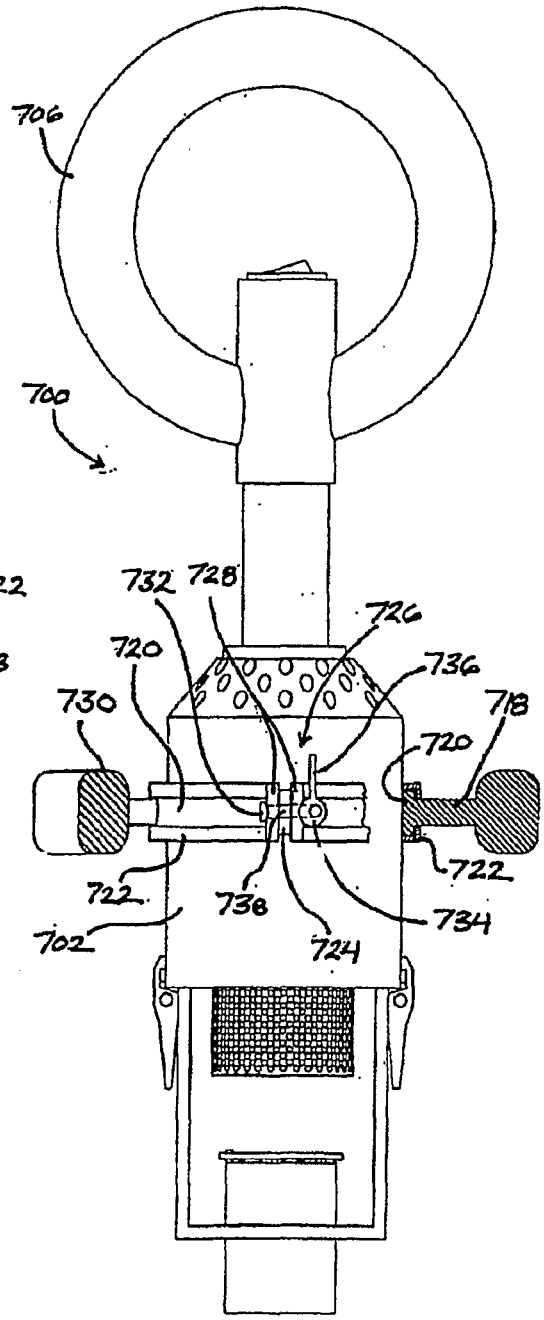
706
700
732
728
726
720
736
730
718
720
722
722
738
734
702
724

Fig. 8

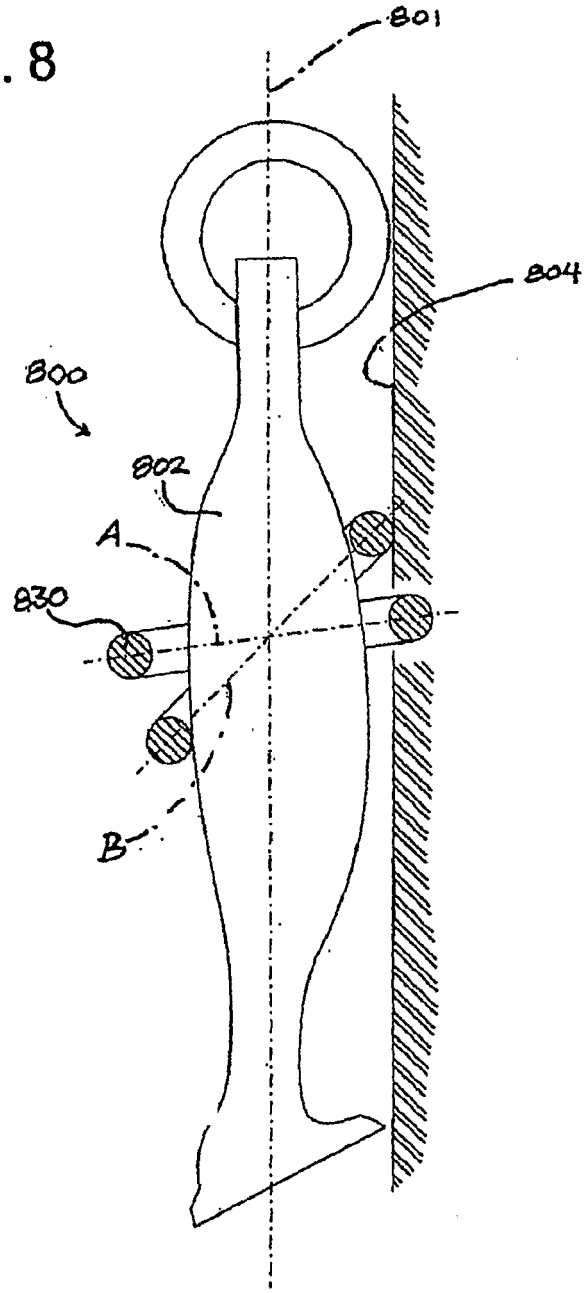

Fig. 9A

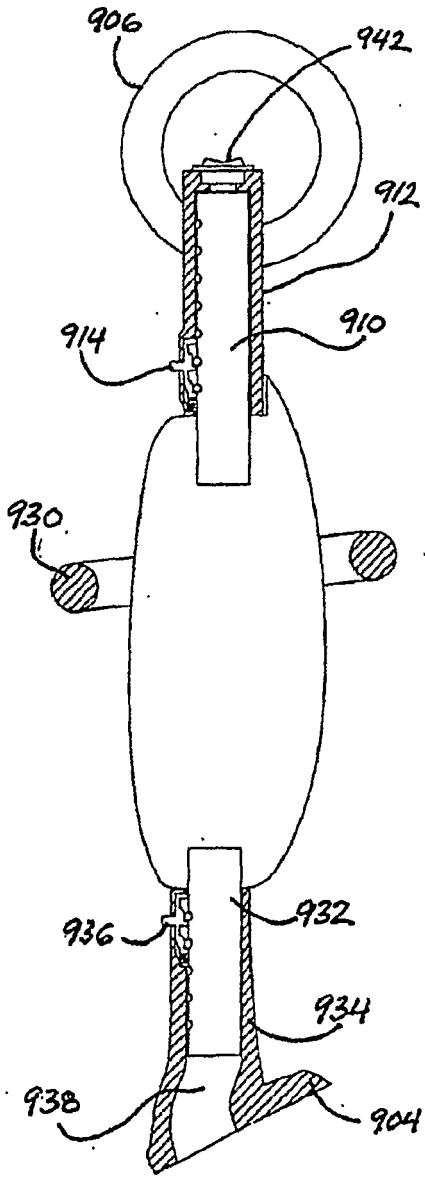

Fig. 9B

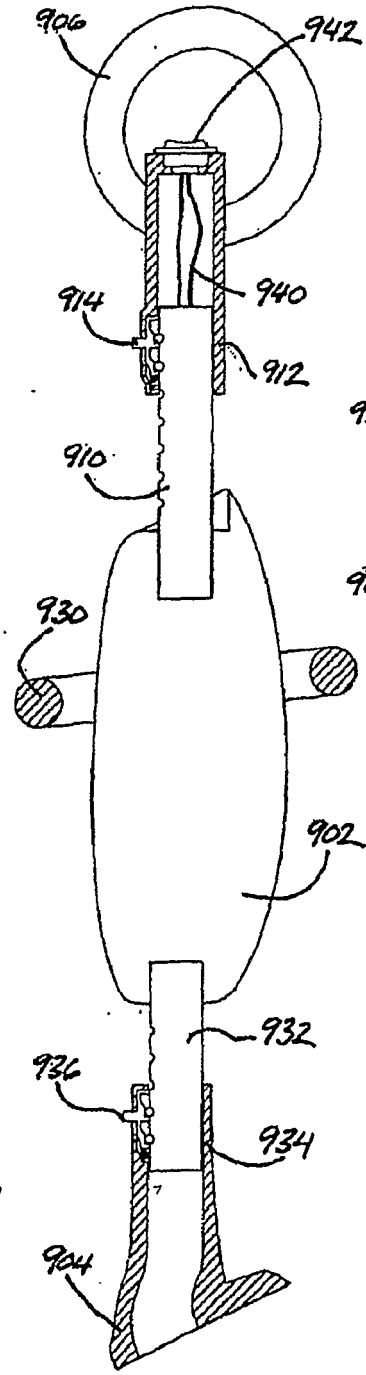

Fig. 9C

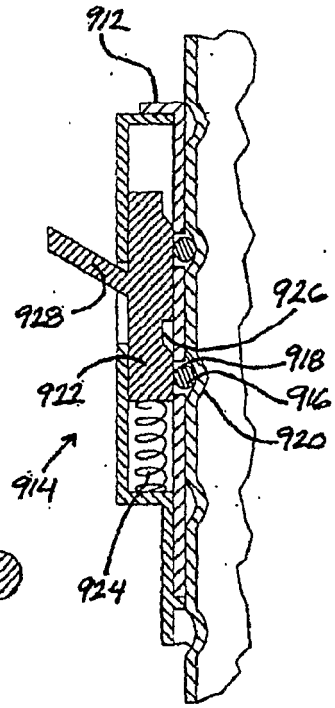

Fig. 10

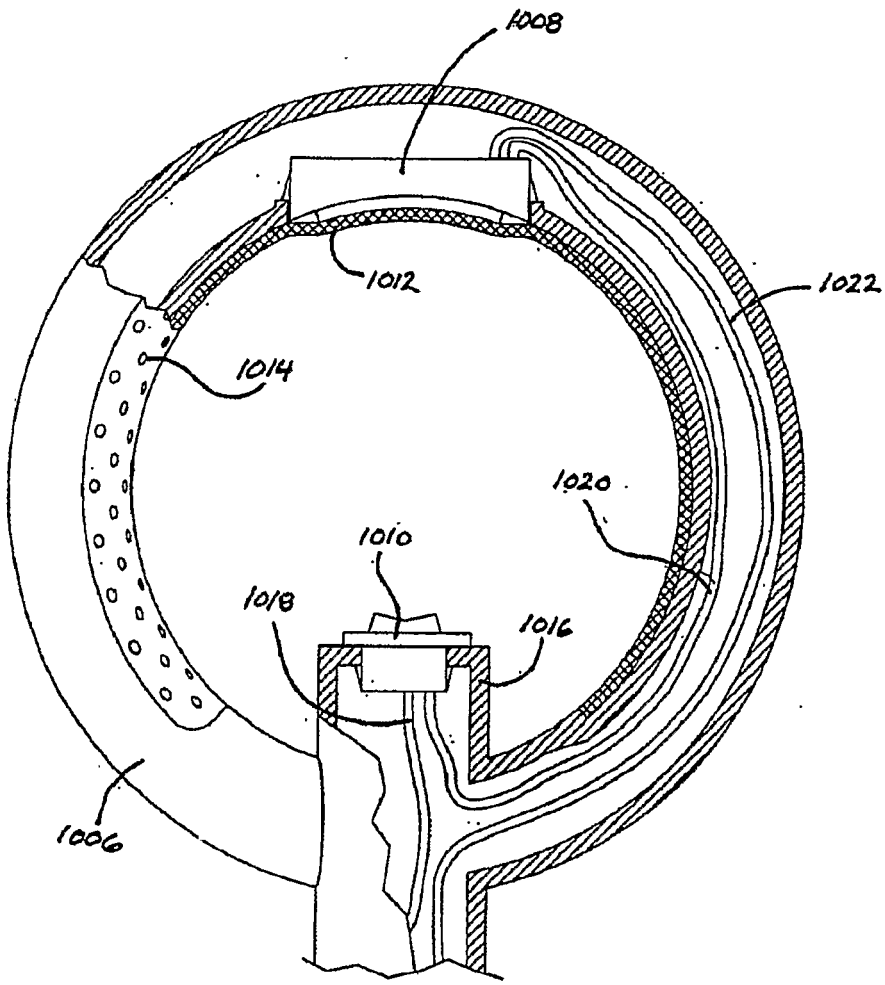

Fig. 11

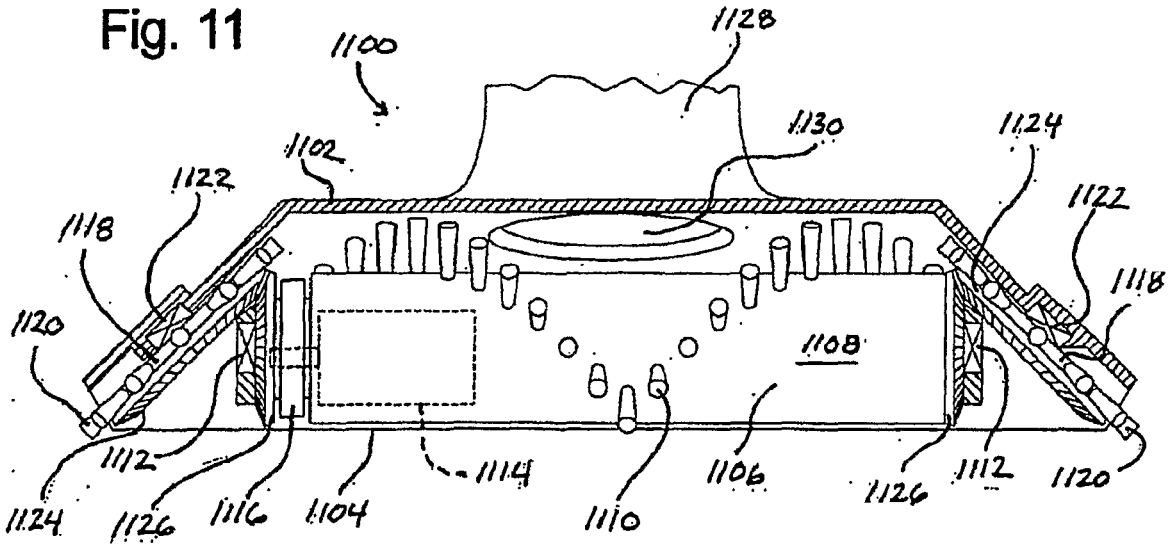

Fig. 12A

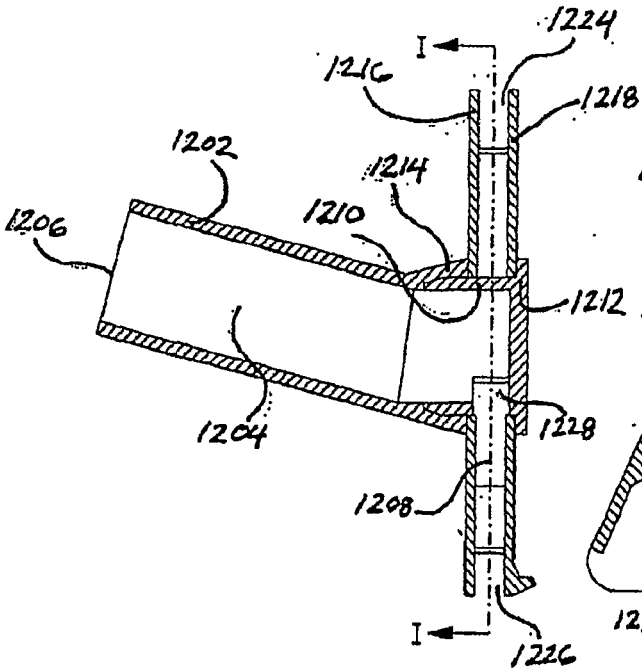

Fig. 12B

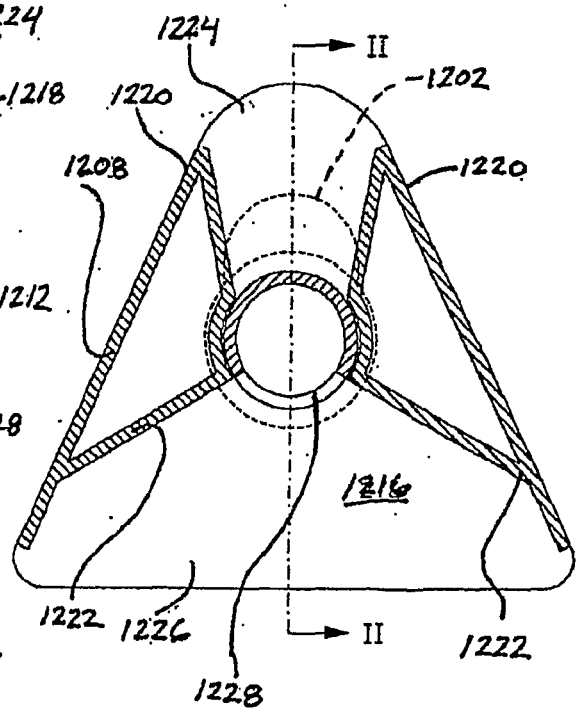

Fig. 13

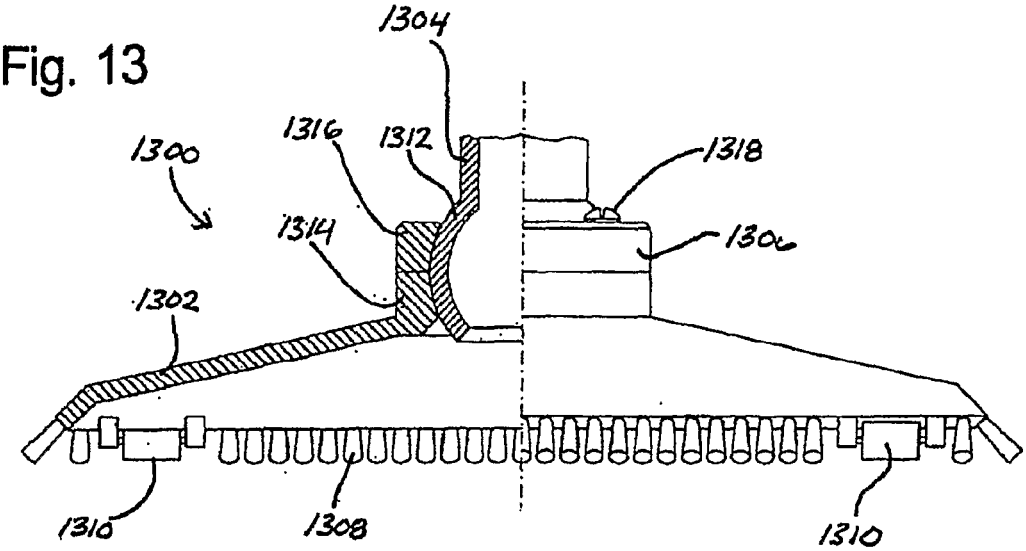

Fig. 14A

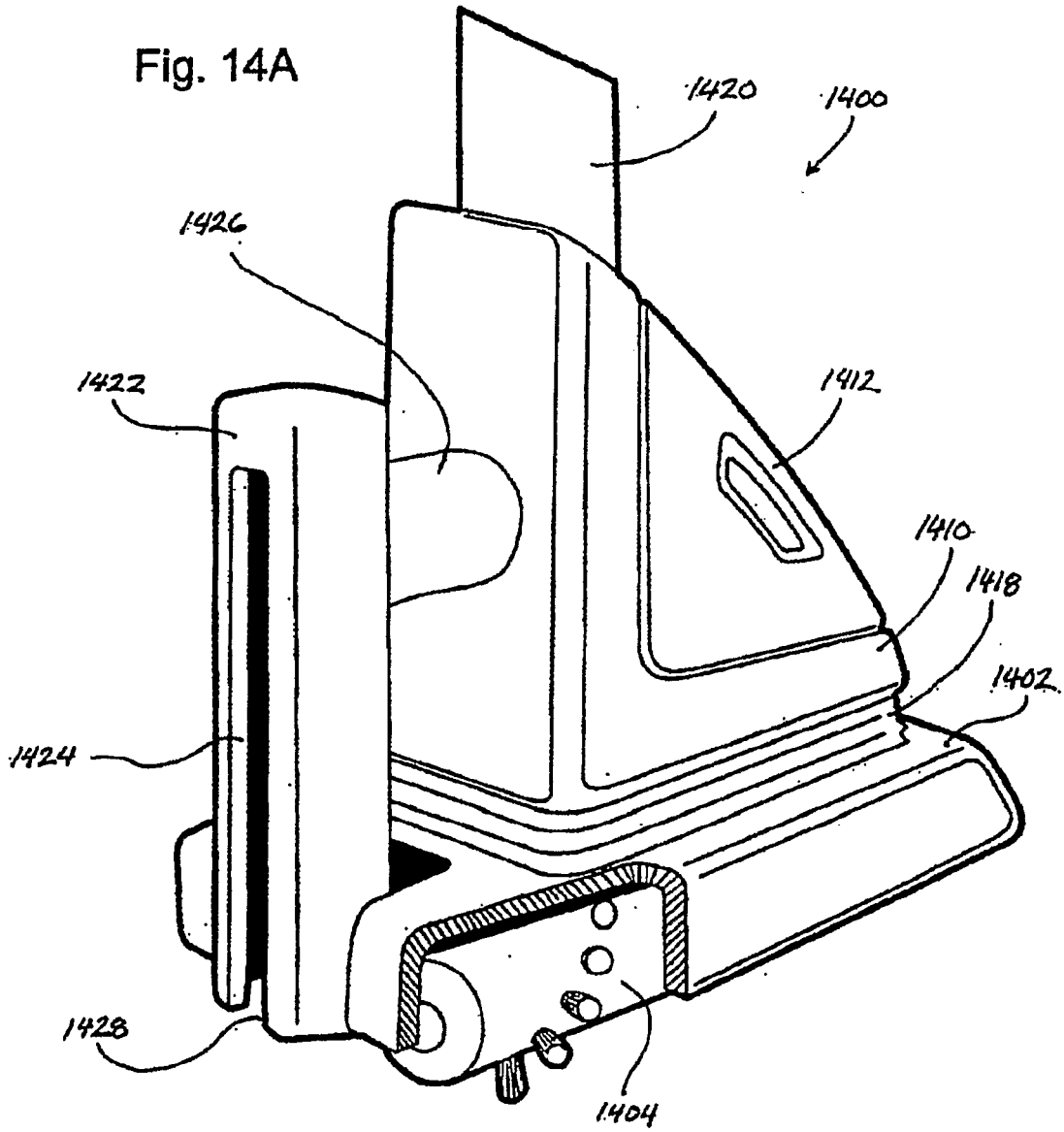

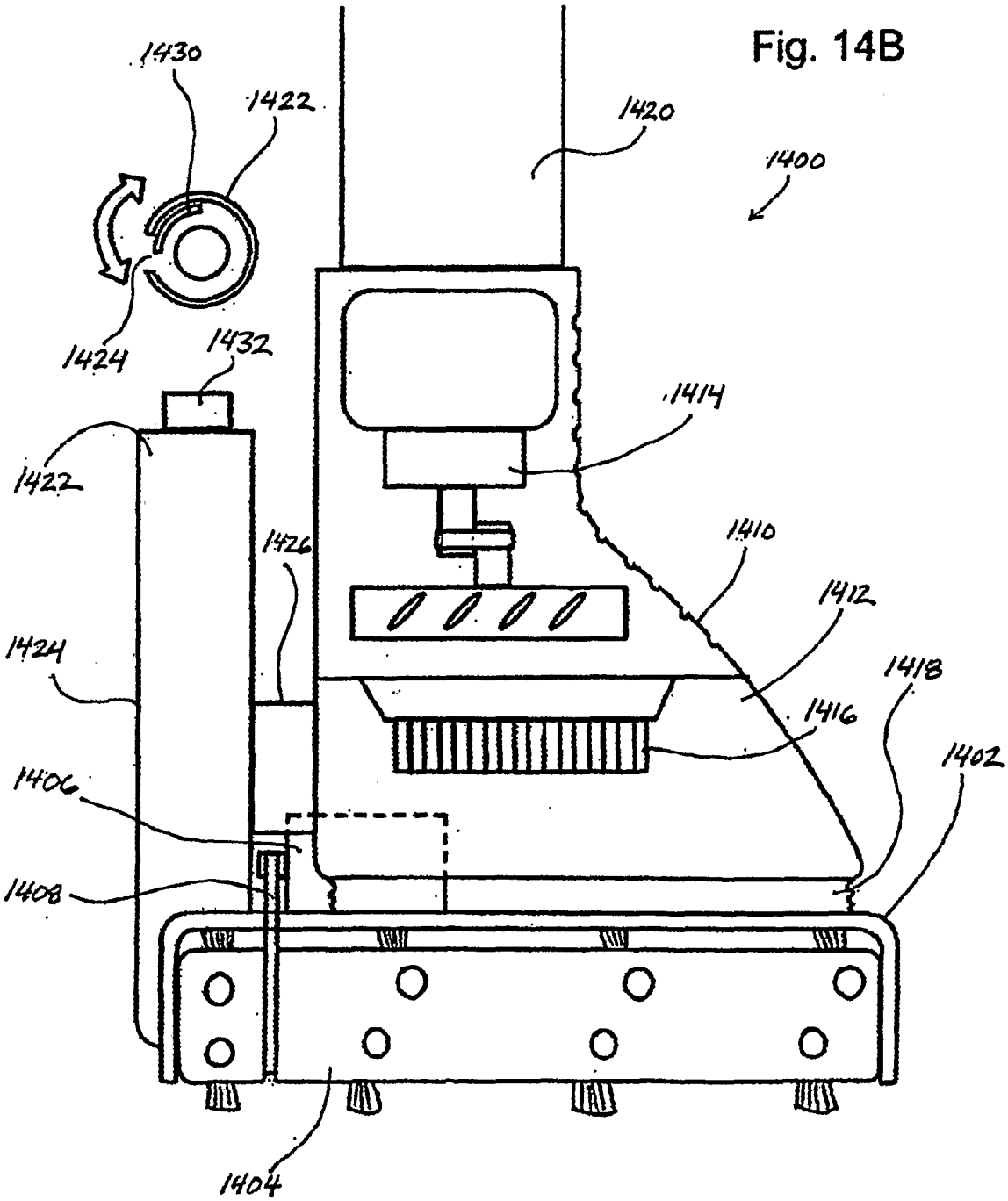
1430
1422
1420
1400
1424
1432
1414
1422
1426
1410
1412
1424
1418
1416
1402
1406
1408
1404

Fig. 14B

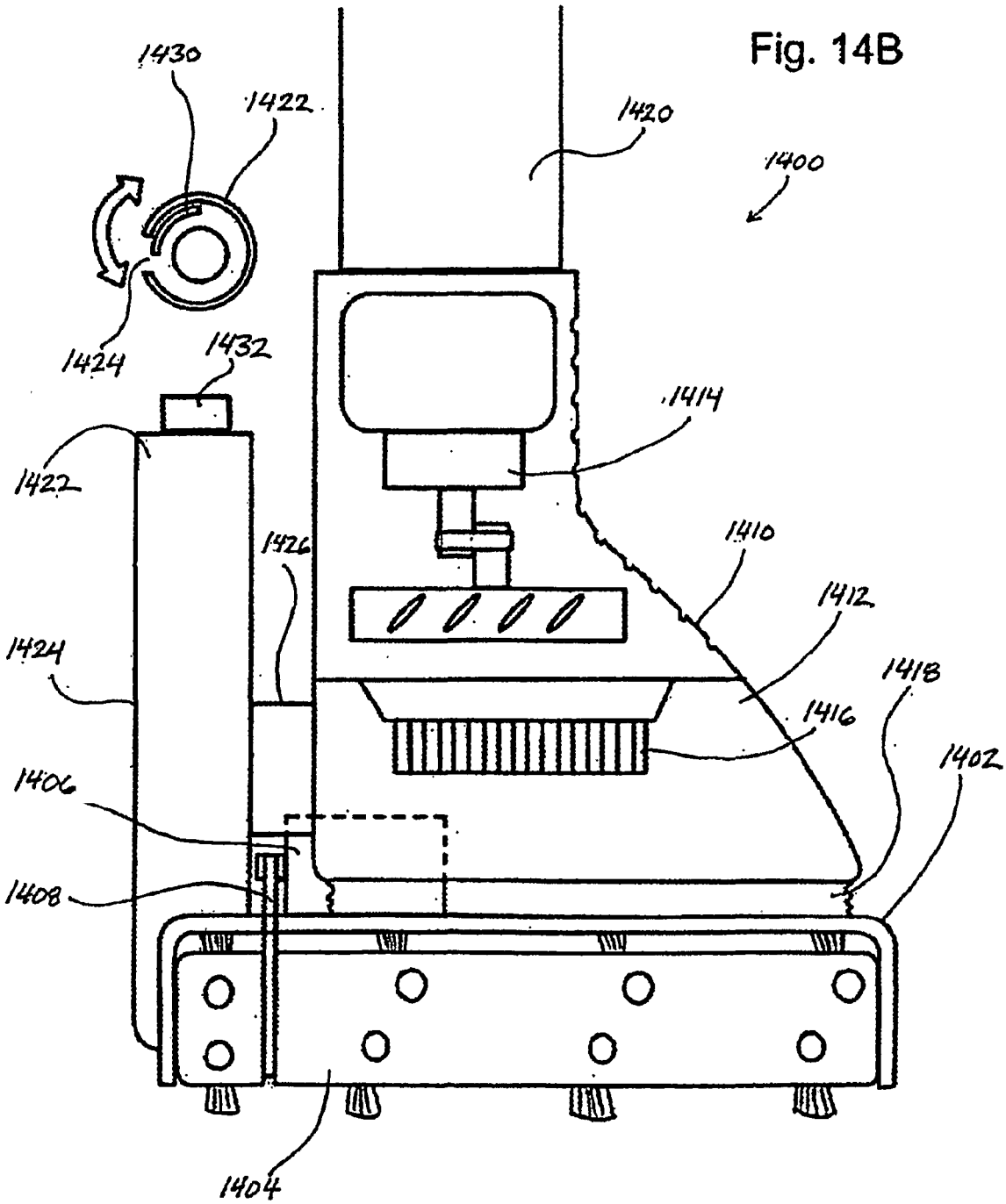
1430
1422
1420
1400
1424
1432
1414
1422
1426
1410
1412
1424
1418
1416
1402
1406
1408
1404

Fig. 14B

15/32

Fig 15

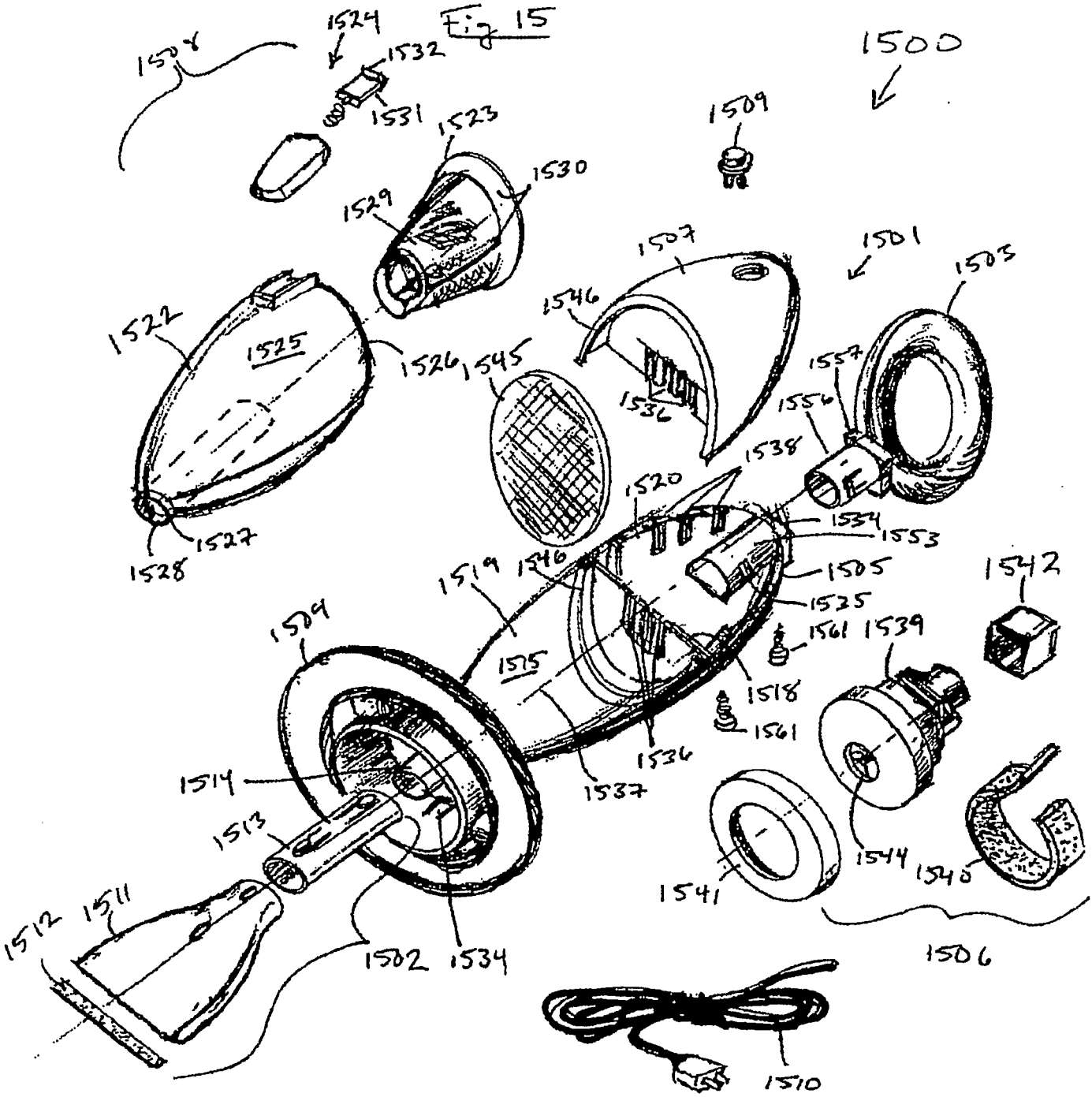
1500
1501
1502
1503
1504
1505
1506
1507
1509
1510
1511
1512
1513
1514
1515
1516
1518
1519
1520
1522
1523
1524
1525
1526
1527
1528
1529
1530
1531
1532
1534
1535
1536
1537
1538
1539
1540
1541
1542
1544
1545
1546
1553
1554
1556
1557
1561

16/32

Fig 16

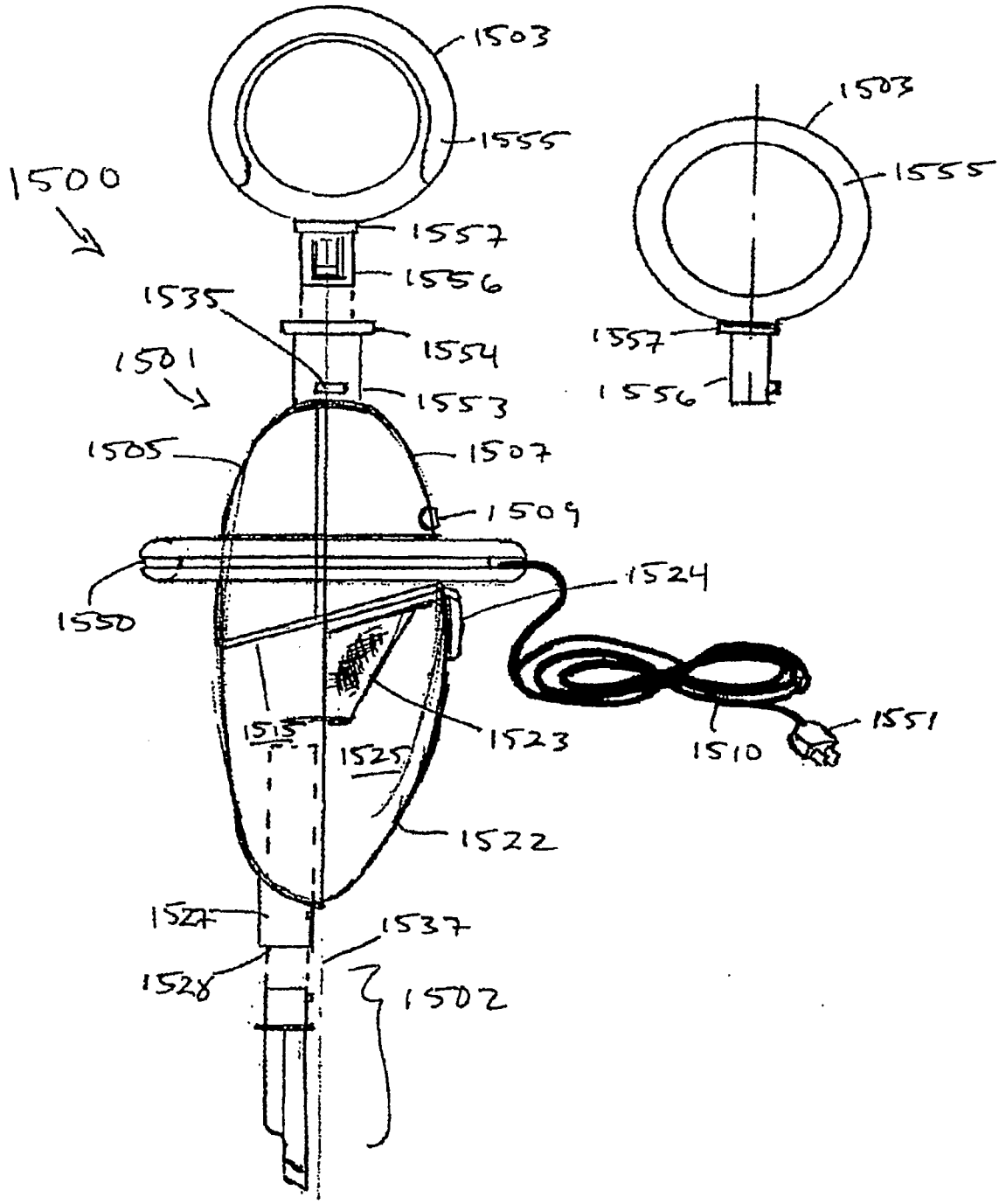
1503
1555
1500
1557
1556
1535
1554
1501
1553
1505
1507
1509
1550
1524
1515
1525
1523
1510
1551
1522
1527
1537
1528
1502
1503
1555
1557
1556

17/32

Fig 17A

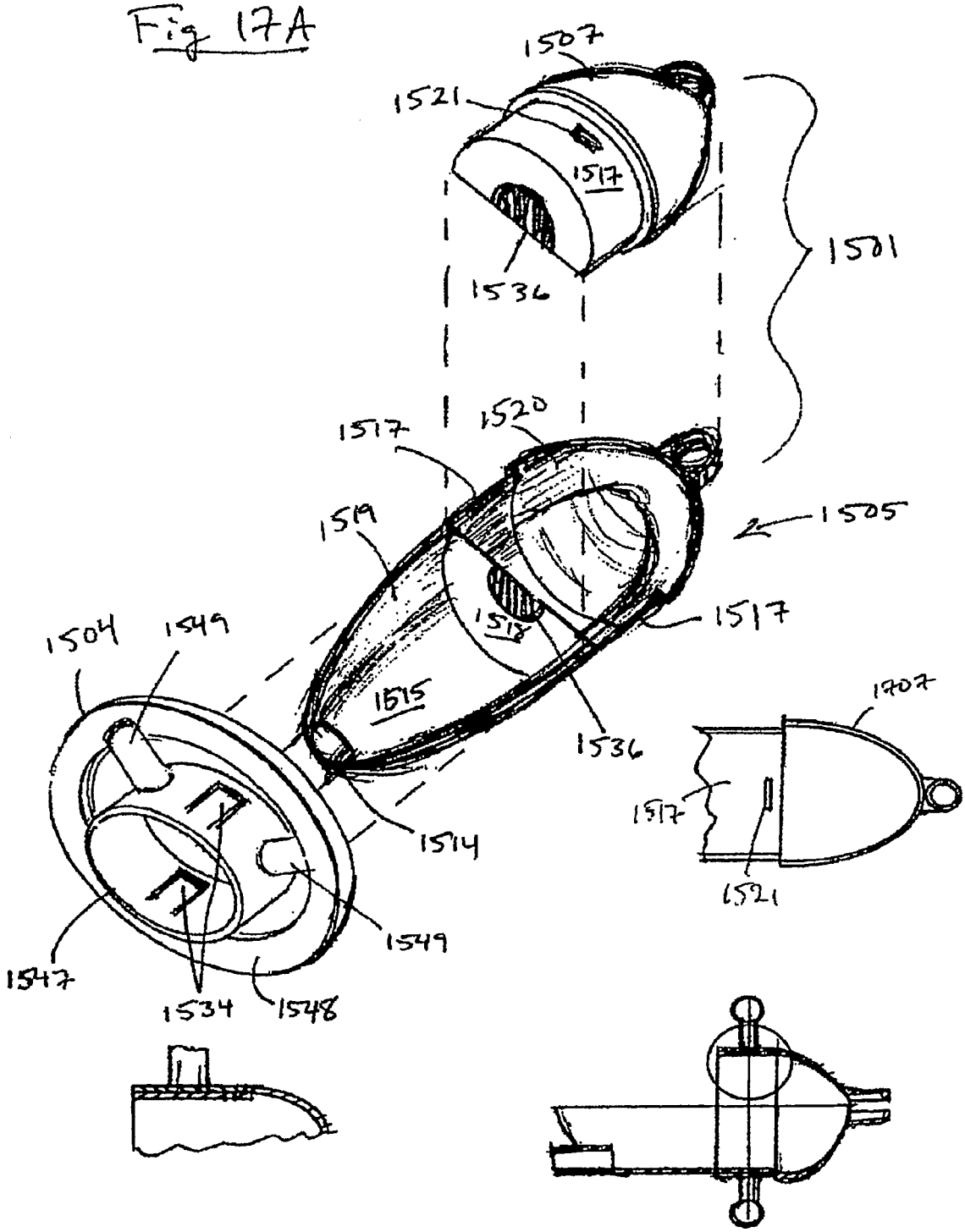
1507
1521
1517
1536
1501
1520
1517
1519
1505
1517
1518
1504
1549
1515
1536
1707
1517
1521
1514
1549
1547
1534
1548

18/32

Fig 17B

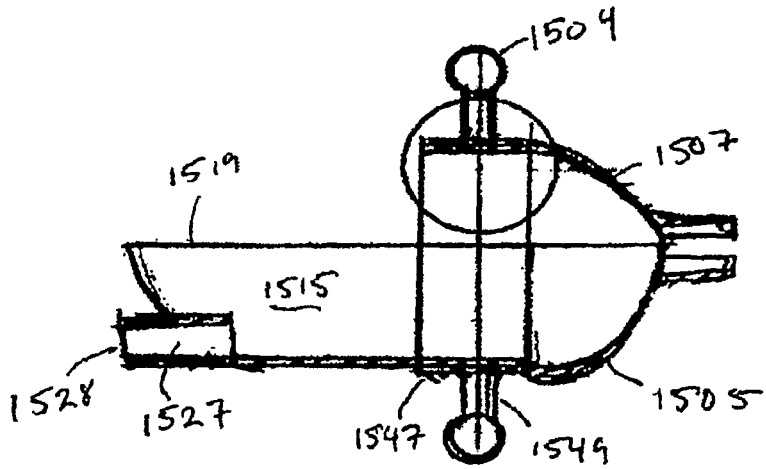
1504
1507
1519
1515
1528
1527
1547
1549
1505

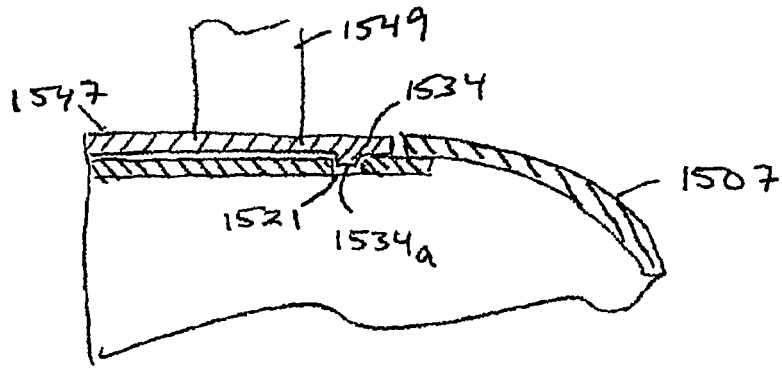
1549
1547
1534
1507
1521
1534a

Fig. 18

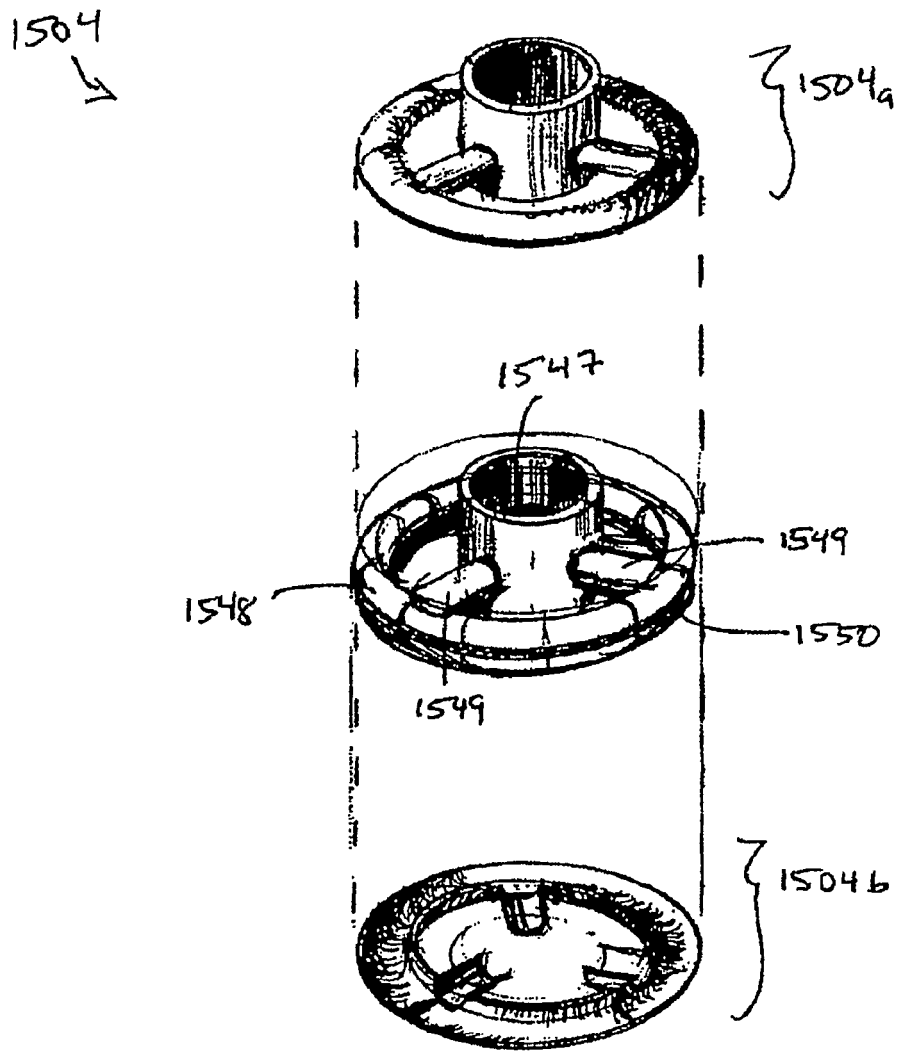

Fig 19

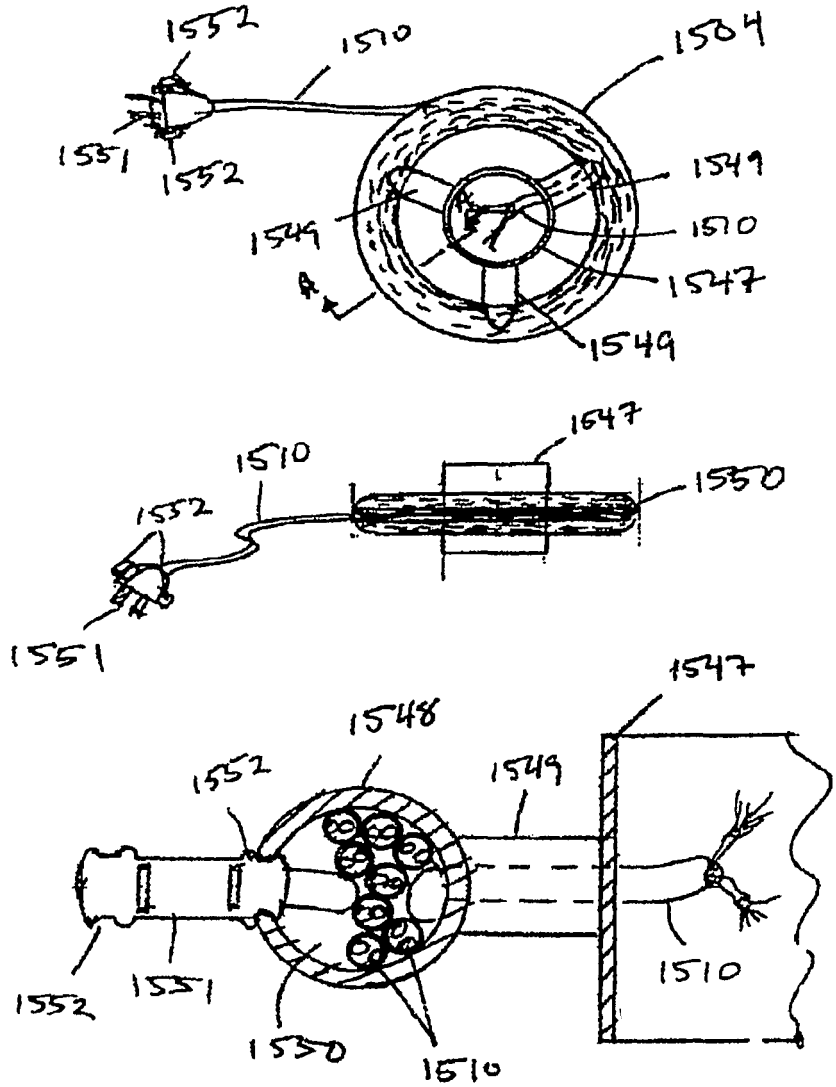
1552
1510
1504
1551
1552
1549
1549
1510
1547
1549
1647
1510
1550
1552
1551
1547
1548
1552
1549
1510
1552
1551
1550
1510

Fig 20A

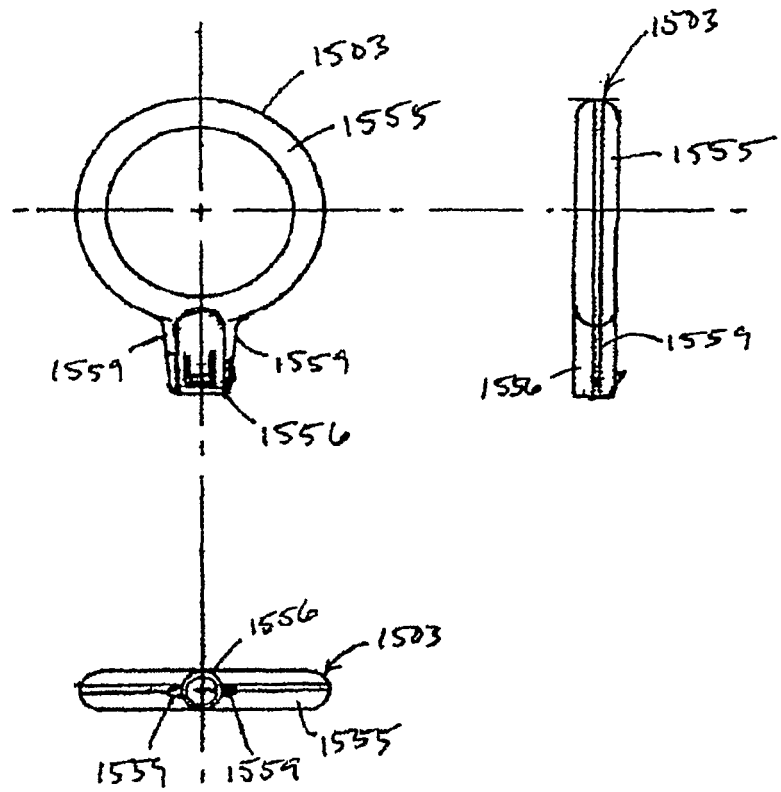
1503
1555
1559
1559
1556
1503
1555
1559
1556
1556
1503
1559
1559
1555

Fig 20B

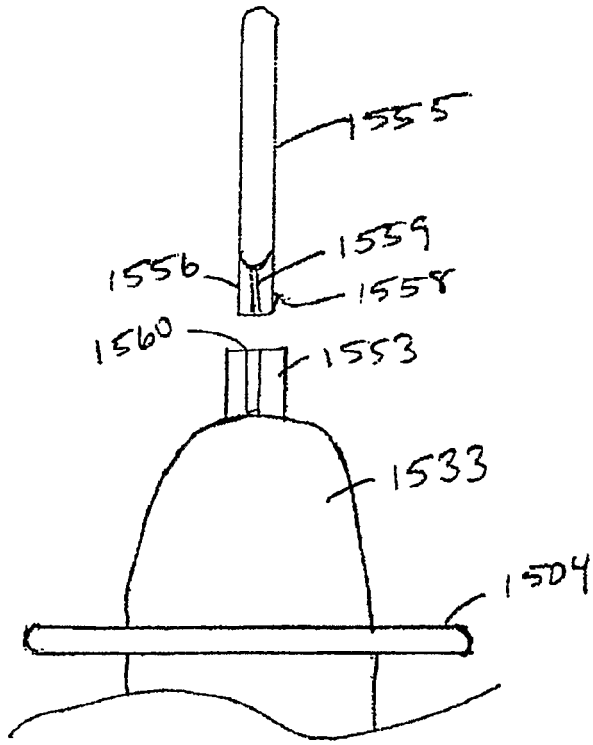

Fig 21

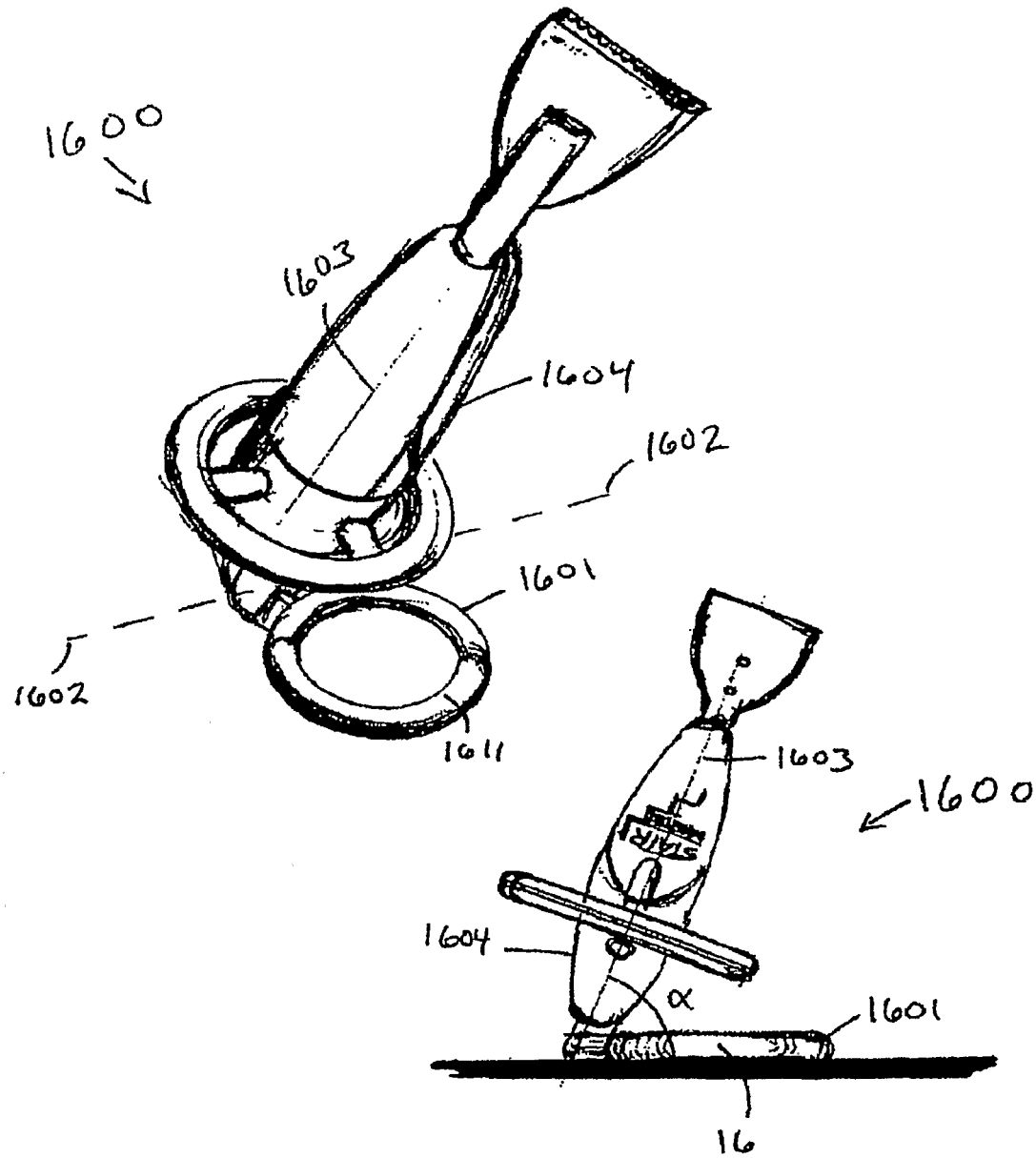

Fig. 22A

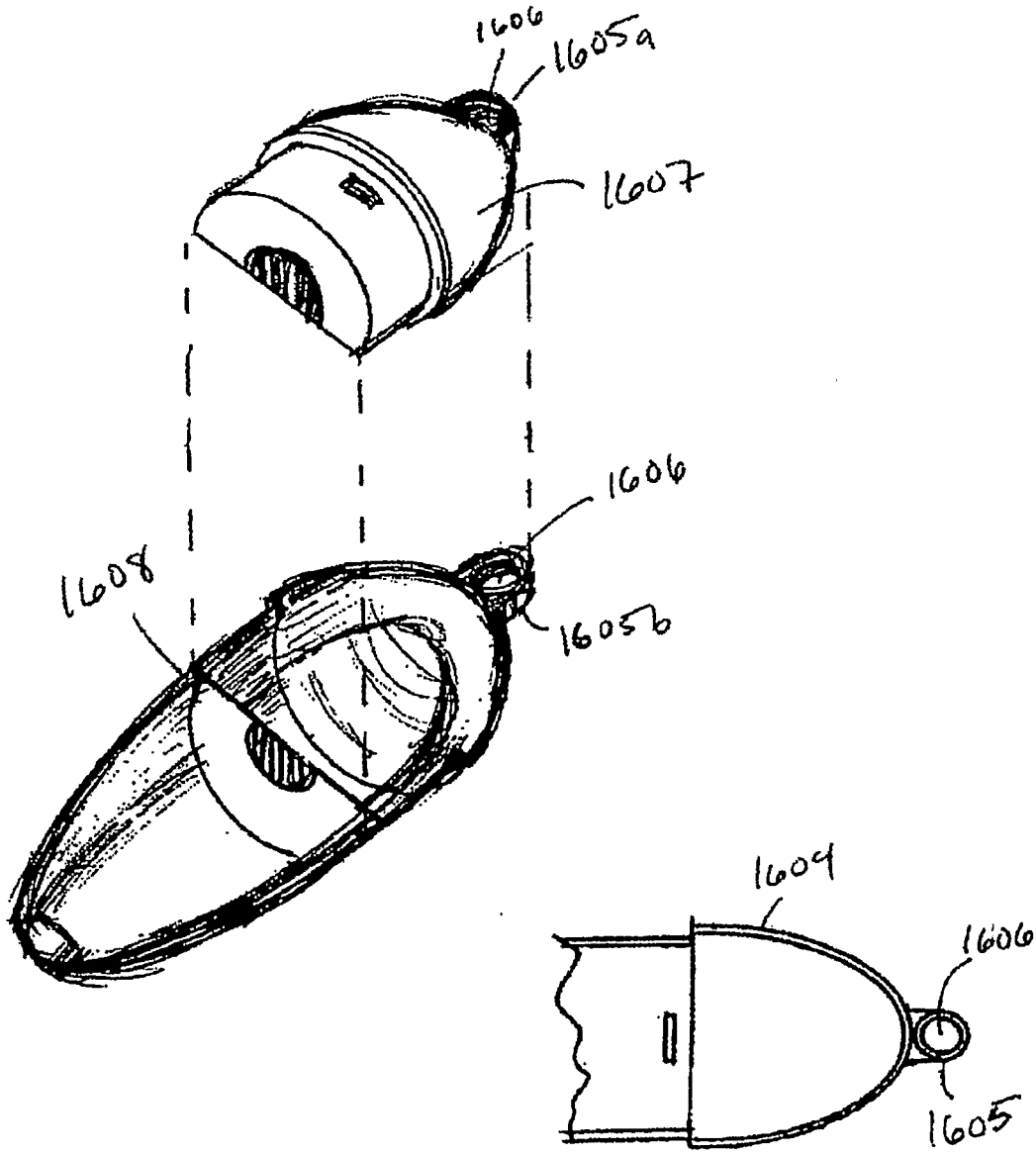

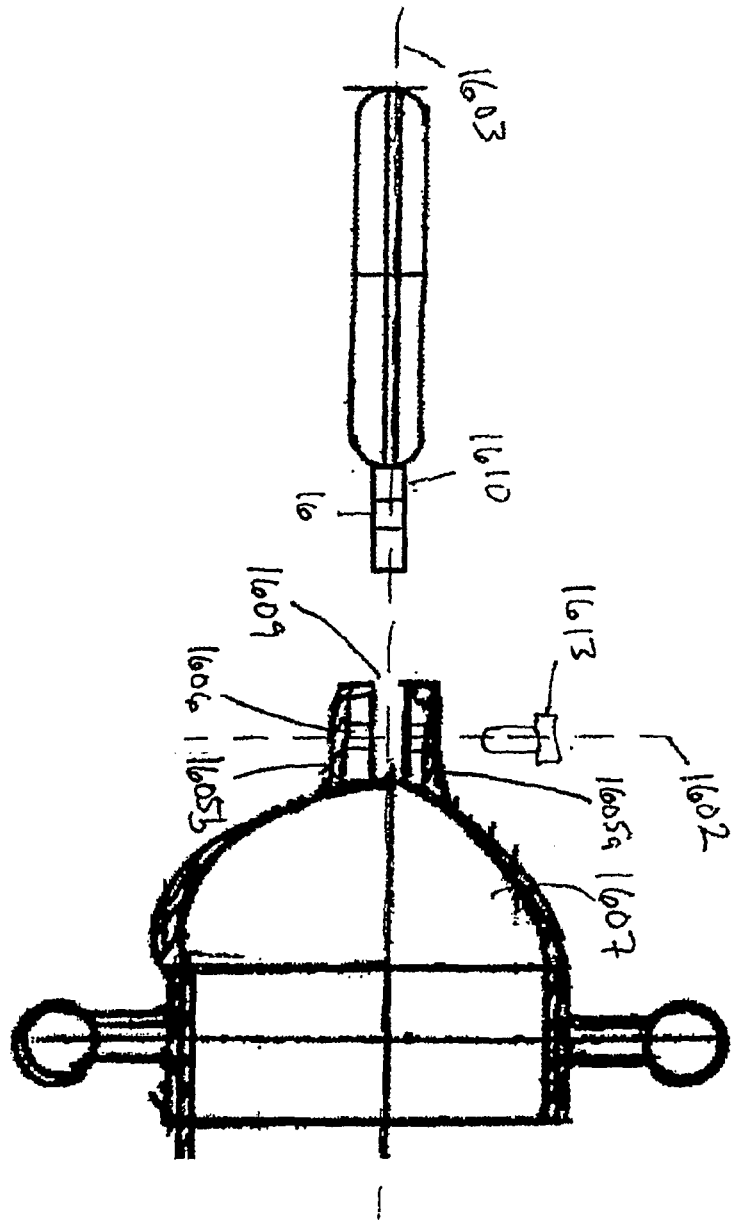

Fig 22B

26/32

Fig 23

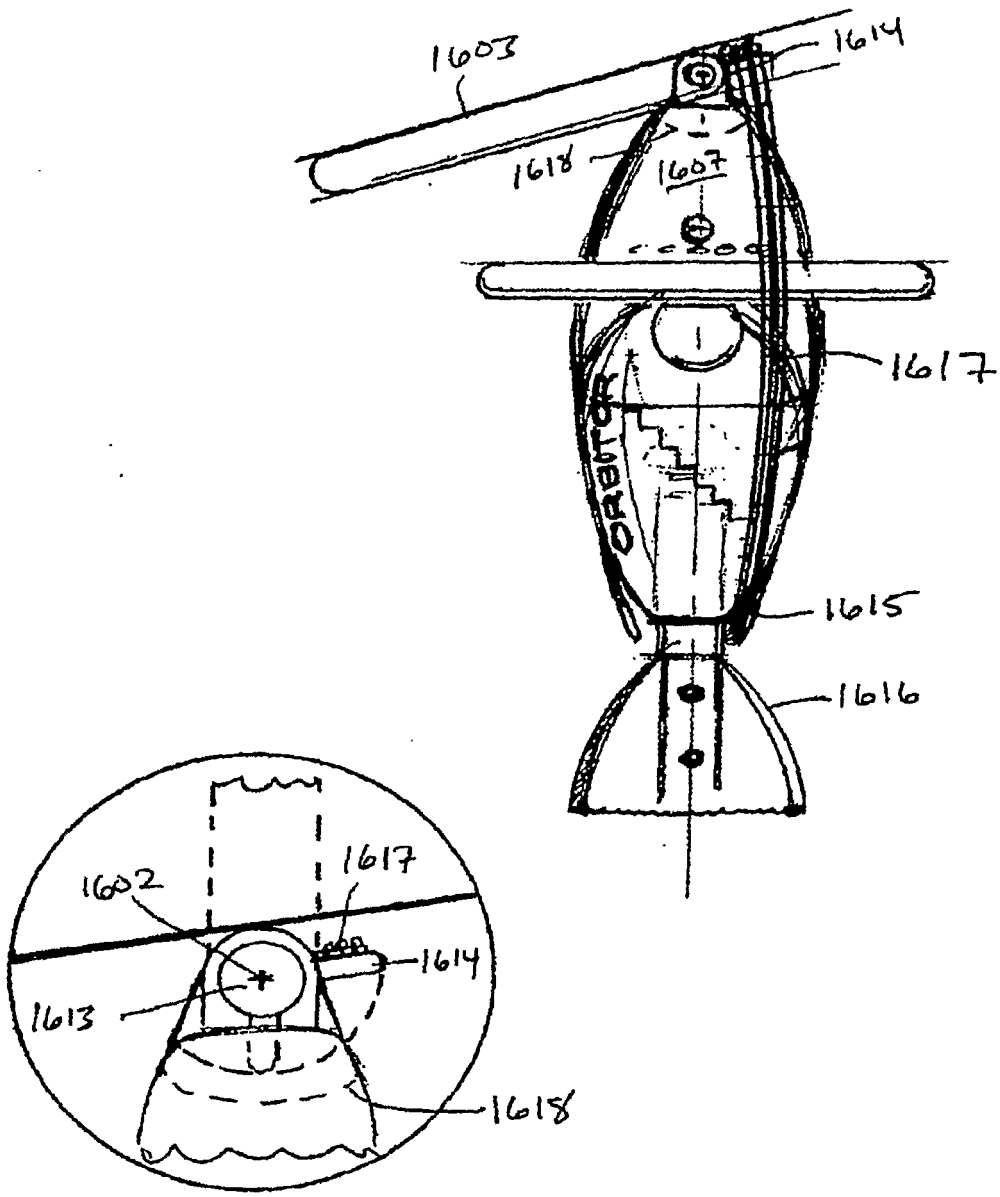
1603
1614
1618
1607
1617
CRBUTOR
1615
1616
1602
1617
1614
1613
1618

Fig 24

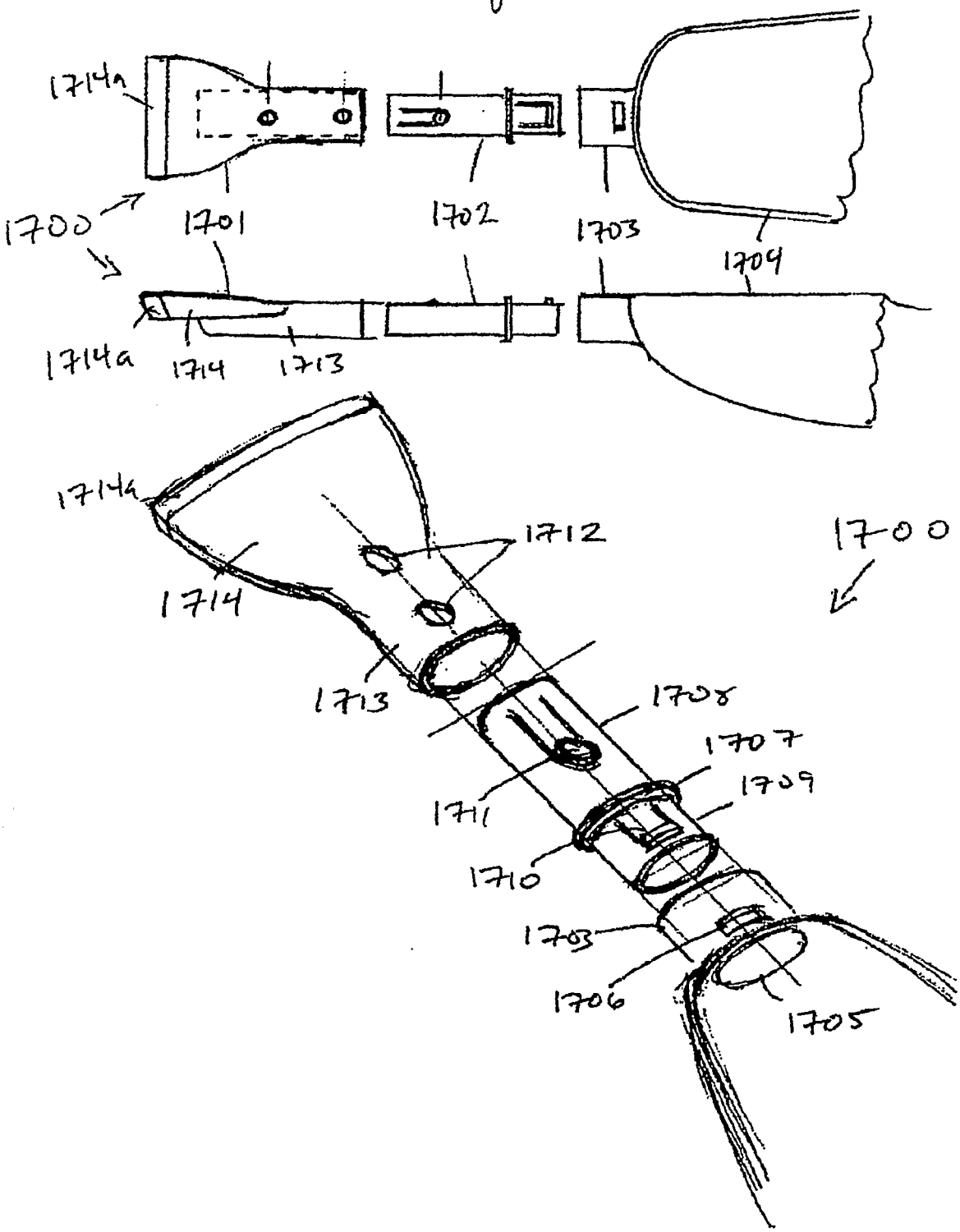
1714a
1700
1701
1702
1703
1704
1714a
1714
1713
1714a
1712
1700
1714
1713
1708
1707
1709
1711
1710
1703
1706
1705

Fig 25

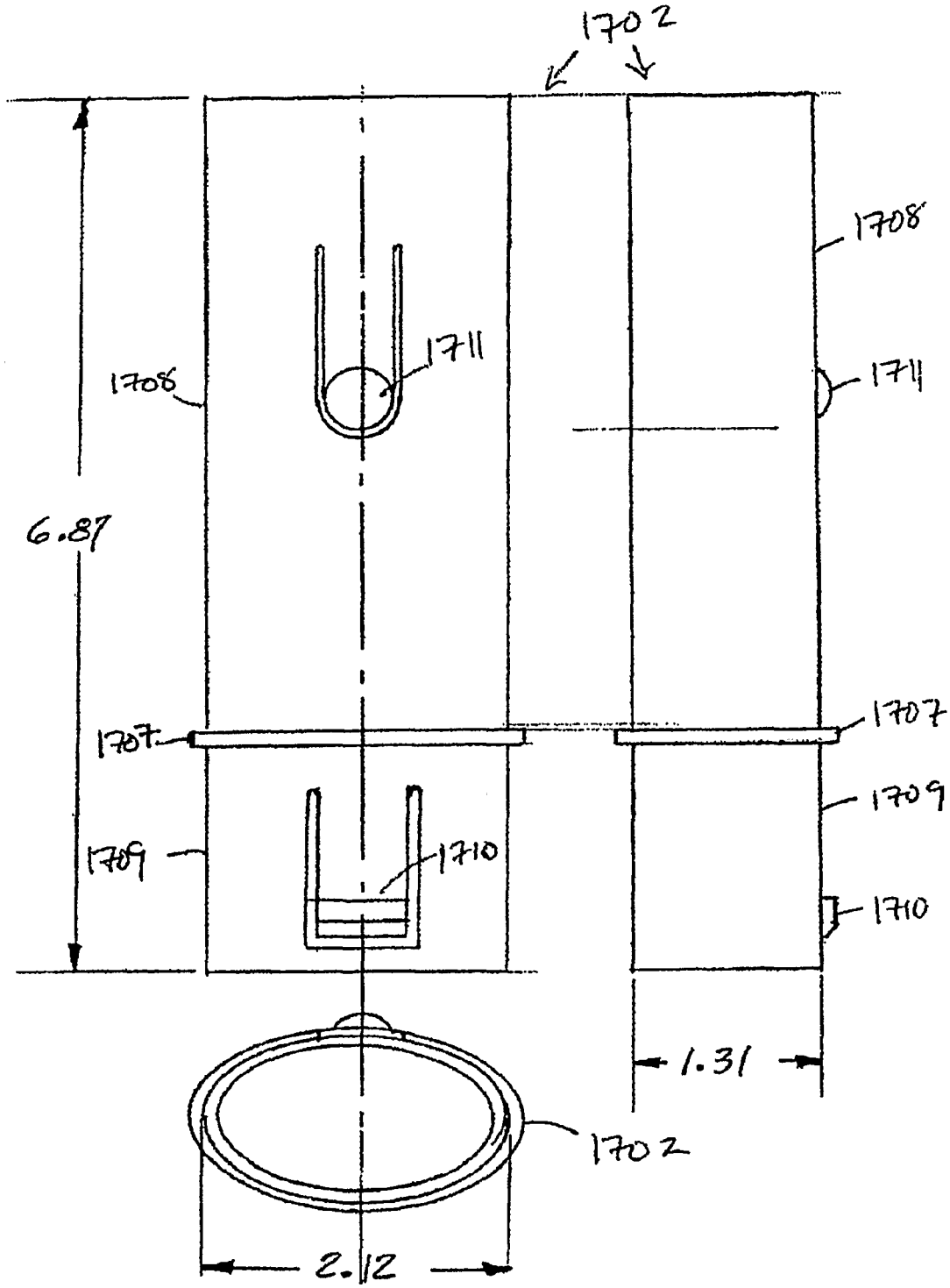
1702
1708
1711
1708
1711
6.87
1707
1707
1709
1709
1710
1710
1.31
1702
2.12

Fig 26

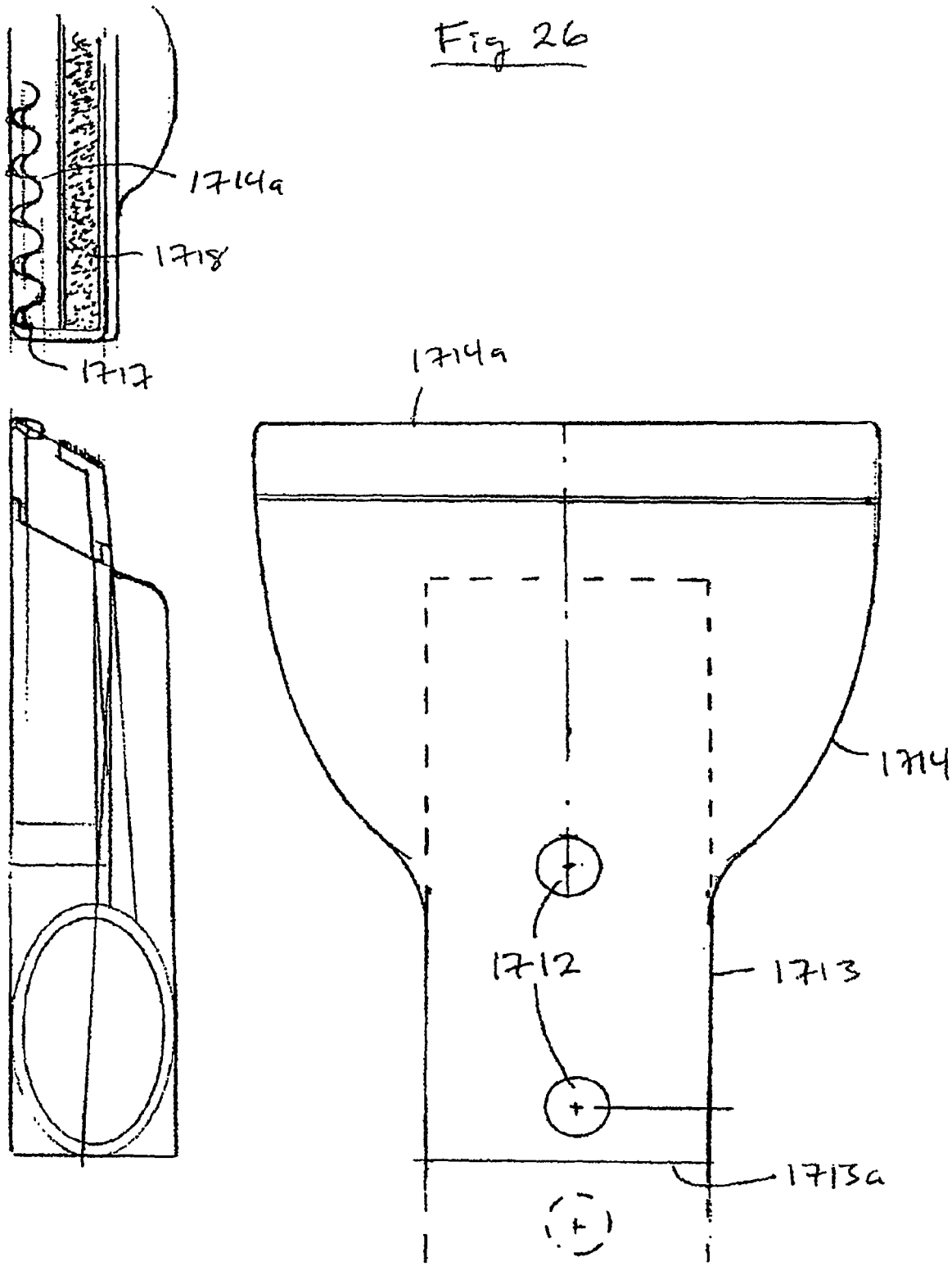

30/32

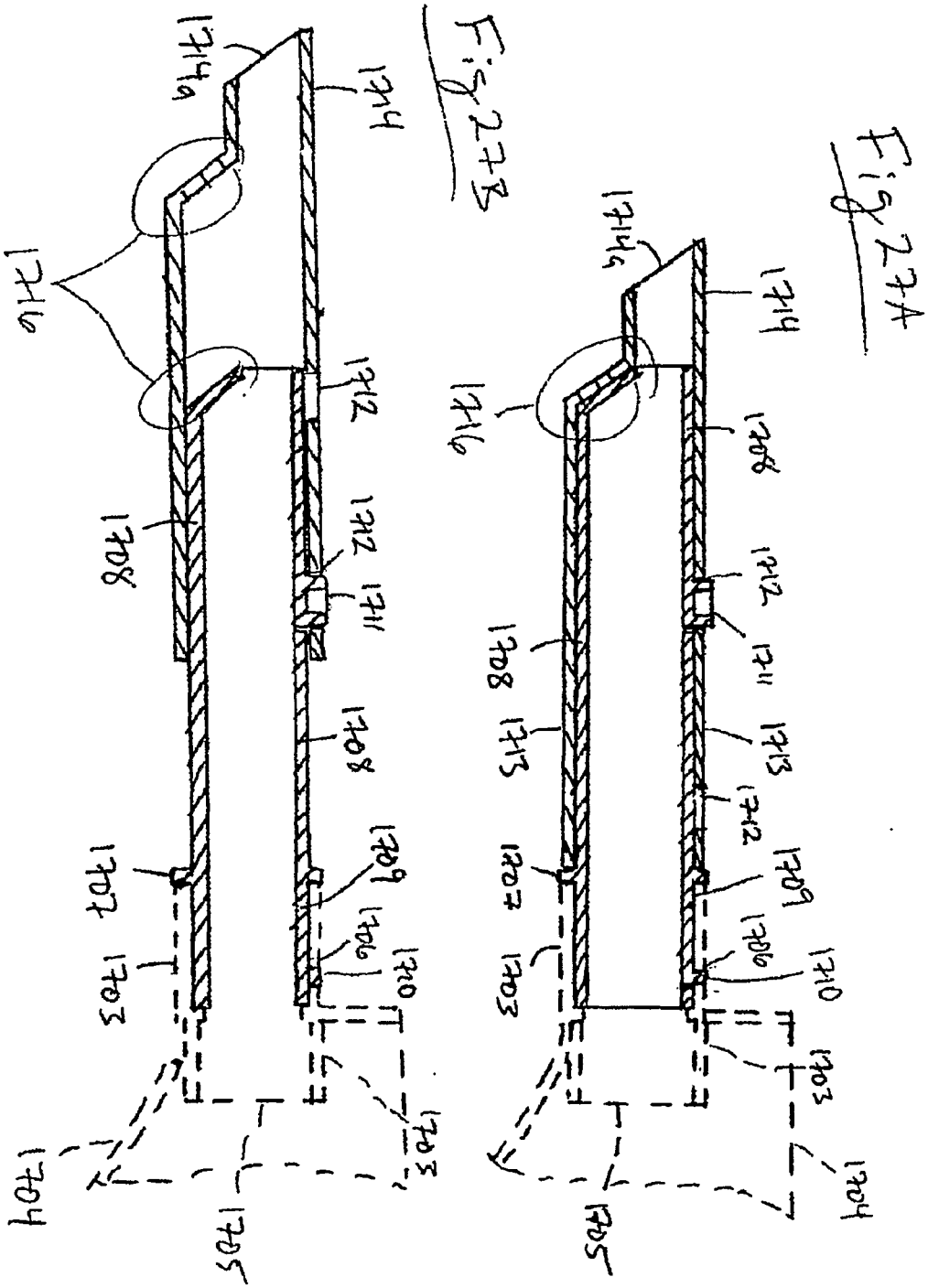

Fig 27A

Fig 27B

Fig 28

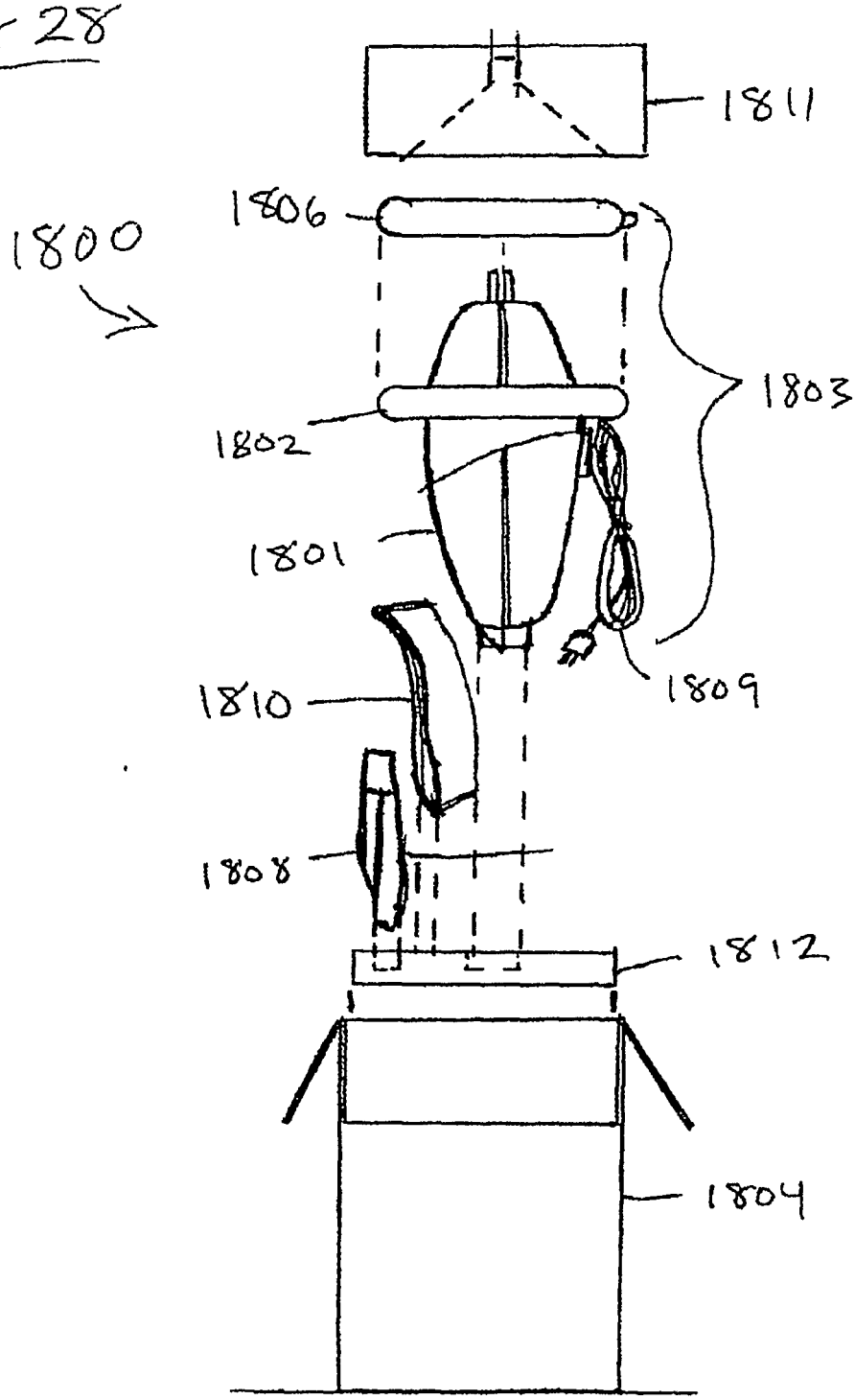

Fig 29A

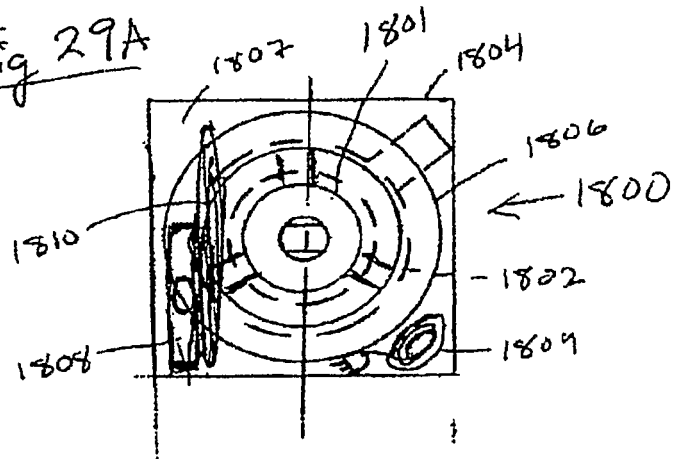
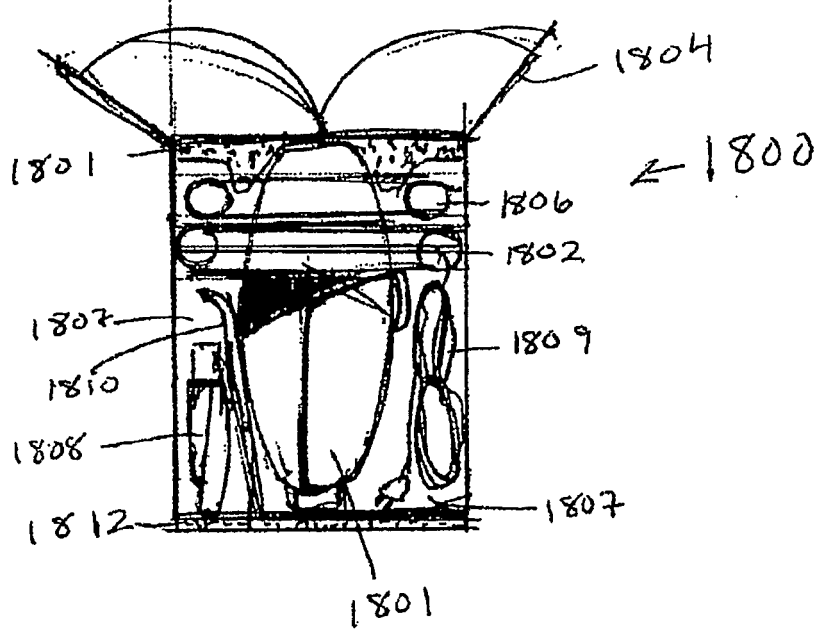
Fig 29B