Trials@uspto.gov
571-272-7822

Paper 73
Date: November 3, 2021

UNITED STATES PATENT AND TRADEMARK OFFICE

BEFORE THE PATENT TRIAL AND APPEAL BOARD

SHENZHEN CARKU TECHNOLOGY CO., LTD.,
Petitioner,

v.

THE NOCO COMPANY
Patent Owner.

IPR2020-00944
Patent 9,007,015 B1

Before JAMESON LEE, DAVID C. McKONE, and
JASON M. REPKO, *Administrative Patent Judges.*

LEE, *Administrative Patent Judge*.

JUDGMENT
Final Written Decision
Determining Some Challenged Claims Unpatentable
Denying Motions to Exclude
35 U.S.C. § 318(a)

EXHIBIT 1014
Petitioner ADC (IPR2024-00671)

I. INTRODUCTION

We have authority to hear this *inter partes* review under 35 U.S.C. § 6. This Final Written Decision issues pursuant to 35 U.S.C. § 318(a) and 37 C.F.R. § 42.73. We determine that Shenzhen Carku Technology Co., Ltd. ("Petitioner") has proved by a preponderance of the evidence that claims 1–10 and 12–23 of U.S. Patent 9,007,015 B1 (Ex. 1001, "the '015 patent") are unpatentable, but not proved that claim 11 is unpatentable.

A. Background

Petitioner filed a Petition for *inter partes* review of claims 1–23 ("challenged claims") of the '015 Patent." Paper 2 ("Pet."). The NOCO Company ("Patent Owner") filed a Preliminary Response. Paper 10. Petitioner filed a Preliminary Reply. Paper 13. Patent Owner filed a Preliminary Sur-Reply. Paper 14. We instituted review on November 12, 2020. Paper 20 ("Decision on Institution" or "DI"). Patent Owner filed a Patent Owner Response, an authorized Patent Owner Supplemental Response, and an authorized Corrected Patent Owner Supplemental Response. Paper 28 (PO Resp.); Paper 49 ("Supp. PO Resp."); Paper 50 (Corr. PO Supp. Resp."). Petitioner filed a Reply. Paper 51. Patent Owner filed a Sur-Reply. Paper 58.

Oral hearing was held on August 12, 2021. A copy of the hearing transcript has been entered into the record as Paper 72 ("Tr."). Each party has filed a Motion to Exclude Evidence, which the other party opposes. Papers 64, 65.

B. Real Parties-in-Interest

Each party identifies itself as the only real party-in-interest. Pet. 93; Paper 5, 1.

C. Related Matters

The parties identify multiple district court litigation involving the '015 patent, in the United States District Courts for the Northern District of Ohio, the Southern District of Ohio, the Northern District of California, the Central District of California, the District of Delaware, and the Middle District of Florida. Pet. 94–95; Paper 5, 1–2. Petitioner is not a party to any of these district court litigations. Prelim. Resp. 32. The parties also identify IPR2018-00503 as a proceeding involving a petition for *inter partes* review of claims 1–21 and 23 the '015 patent. Pet. 96; Paper 5, 3. Petitioner was not the petitioner in that proceeding. The Board declined institution in IPR2018-00503 on July 11, 2018. IPR2018-00503, Paper 9. Related IPR2021-00309 was also filed on December 11, 2020, as a "follow-on" petition attempting to join this proceeding, and Petitioner was also not the petitioner in that proceeding. The Board declined institution in IPR2021-00309 on May 10, 2021. IPR2021-00309, Paper 11.

D. The '015 Patent

The '015 patent is titled "Portable Vehicle Battery Jump Start Apparatus with Safety Protection." Ex. 1001, Code (54). It discloses an apparatus for jump starting a vehicle engine, which apparatus includes an internal power supply, an output port having positive and negative polarity outputs, a "vehicle battery isolation sensor" to detect presence of a vehicle battery connected between the positive and negative polarity outputs, a "reverse polarity sensor" to detect the polarity of the vehicle battery connected between the positive and negative outputs, a power FET switch connected between the internal power supply and the output port, and a microcontroller which receives input signals from the vehicle battery

EXHIBIT 1014
Petitioner ADC (IPR2024-00671)

isolation sensor and the reverse polarity sensor and provides an output signal to the power FET switch. *Id.* at 3:16–30. The ’015 patent describes that the power FET switch is turned on by the microcontroller to connect the internal power supply to the output port in response to signals from the two sensors indicating the presence of a vehicle battery at the output port and proper polarity connection of positive and negative terminals of the vehicle battery with the positive and negative polarity outputs. *Id.* at 3:31–36.

Figure 1 of the ’015 patent is a functional block diagram of the disclosed apparatus and is reproduced below.

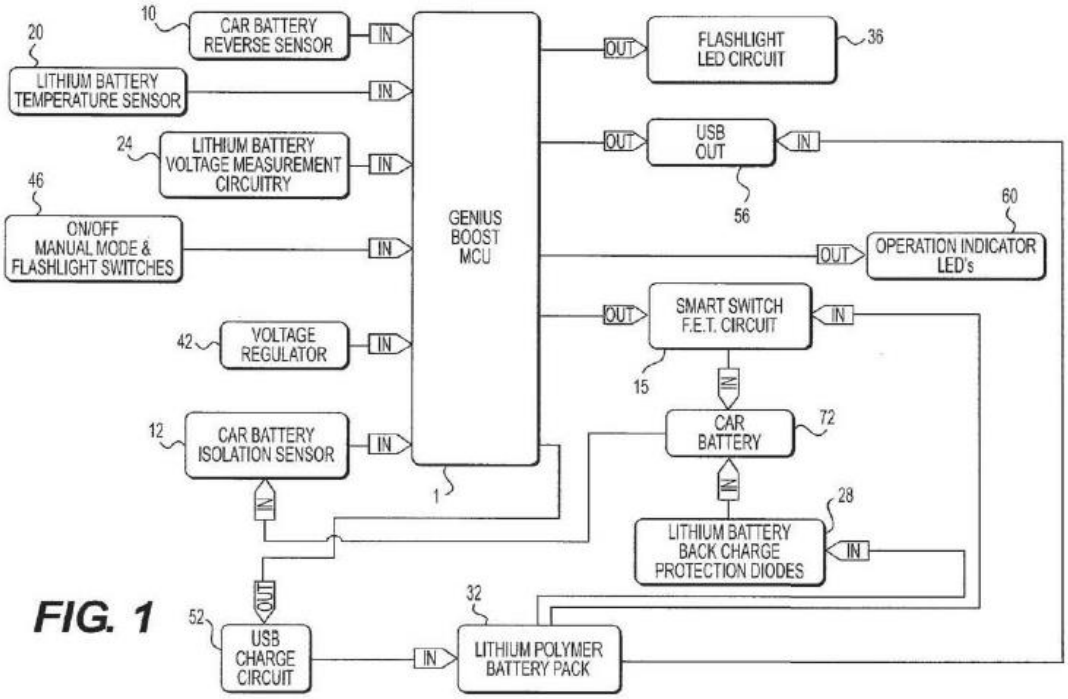

FIG. 1

Figure 1 is a functional block diagram of a handheld vehicle battery boost apparatus according to the ’015 patent. *Id.* at 3:50–52.

The apparatus includes, *inter alia*, lithium polymer battery pack 32, car battery isolation sensor 12, car battery reverse sensor 10, smart switch FET circuit 15, and programmable microcontroller unit (MCU) 1. *Id.* at

EXHIBIT 1014
Petitioner ADC (IPR2024-00671)

3:67–4:1, 4:20–38. Reverse sensor 10 "monitors the polarity of the vehicle battery 72 when the handheld battery booster device is connected to the vehicle's electric system." *Id.* at 4:20–22. Car battery isolation sensor 12 "detects whether or not a vehicle battery 72 is connected to the booster device." *Id.* at 4:26–28. Smart switch FET circuit 15 "electrically switches the handheld battery booster lithium battery to the vehicle's electric system only when the vehicle battery is determined by the MCU 1 to be present (in response to a detection signal provided by isolation sensor 12) and connected with the correct polarity (in response to a detection signal provided by reverse sensor 10)." *Id.* at 4:32–38.

Figure 2A-4 of the '015 patent discloses preferred embodiments of the vehicle isolation sensor 12 and the reverse sensor 10:

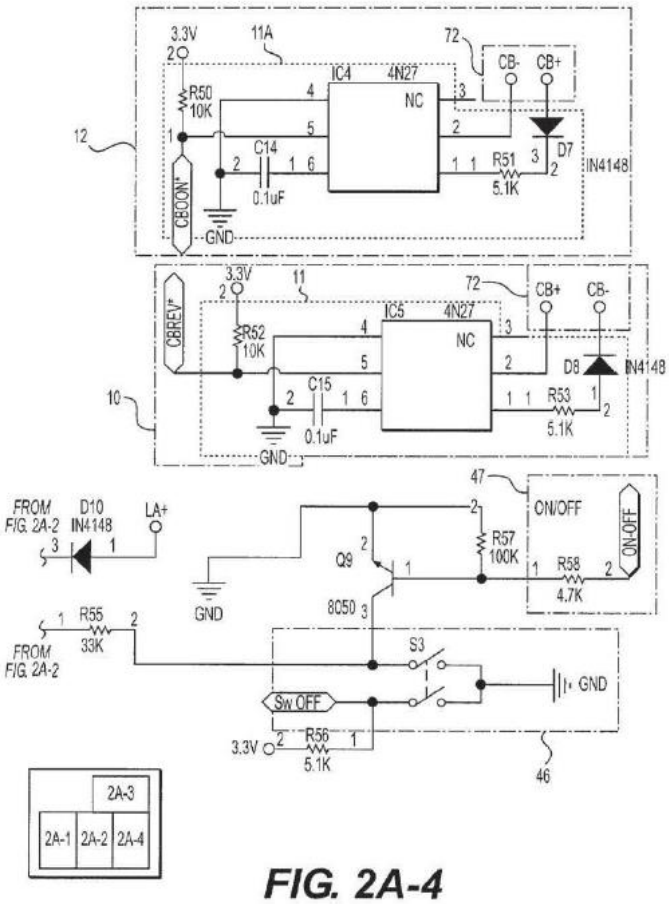

FIG. 2A-4

EXHIBIT 1014
Petitioner ADC (IPR2024-00671)

Id., Fig. 2A-4. Figure 2A-4, above, is a schematic circuit diagram depicting elements of an exemplary embodiment of a handheld vehicle battery boost apparatus. *E.g.*, *id.* at 3:53–55. Element 12 of Fig. 2A-4 is a preferred embodiment of the vehicle isolation sensor and comprises optocoupler LED 11A that, "if the battery 72 is connected to the terminals of the booster device with the correct polarity," will conduct current, "and is therefore turned on, . . . indicating the presence of a battery across the jumper output terminals of the handheld booster device." *Id.* at 5:26–36. Element 10 of Fig. 2A-4 is a preferred embodiment of the car battery reverse sensor and comprises optocoupler LED 11 that, "if the battery 72 is connected to the terminals of the booster device with the correct polarity," will not conduct current, "and is therefore turned off." *Id.* at 5:17–26.

The '015 patent explains:

> If the car battery 72 is connected to the handheld booster device with reverse polarity, the optocoupler LED 11 of the reverse sensor 10 will conduct current, providing a "0" or low signal to microcontroller unit 1. Further, if no battery is connected to the handheld booster device, the optocoupler LED 11A of the isolation sensor 12 will not conduct current, and is therefore turned off, providing a "1" or high output signal to the MCU, indicating the absence of any battery connected to the handheld booster device. Using these specific inputs, the microcontroller software of MCU 1 can determine when it is safe to turn on the smart switch FET 15, thereby connecting the lithium battery pack to the jumper terminals of the booster device. Consequently, if the car battery 72 either is not connected to the booster device at all, or is connected with reverse polarity, the MCU 1 can keep the smart switch FET 15 from being turned on, thus prevent[ing] sparking/short circuiting of the lithium battery pack.

Id. at 5:37–54.

E. Sole Independent Claim

Claim 1, reproduced below with bracketed letters added consistent with the labeling in the claim charts of the Petition, is the sole independent claim and is illustrative of the challenged claims (paragraph break added between limitations 1.f and 1.g).

1. Apparatus for jump starting a vehicle engine, comprising:

[a] an internal power supply;

[b] an output port having positive and negative polarity outputs;

[c] a vehicle battery isolation sensor connected in circuit with said positive and negative polarity outputs, configured to detect presence of a vehicle battery connected between said positive and negative polarity outputs;

[d] a reverse polarity sensor connected in circuit with said positive and negative polarity outputs, configured to detect polarity of a vehicle battery connected between said positive and negative polarity outputs and to provide an output signal indicating whether positive and negative terminals of said vehicle battery are properly connected with said positive and negative polarity outputs of said output port;

[e] a power switch connected between said internal power supply and said output port; and

[f] a microcontroller configured to receive input signals from said vehicle isolation sensor and said reverse polarity sensor, and to provide an output signal to said power switch,

[g] such that said power switch is turned on to cause said internal power supply to be connected to said output port in response to signals from said sensors indicating the presence of a vehicle battery at said output port and proper polarity connection of positive and negative terminals of said vehicle battery with said positive and negative polarity outputs, and is not turned on when signals from said sensors indicate either the absence of a vehicle battery at said output port or improper polarity connection of positive and negative

> terminals of said vehicle battery with said positive and negative polarity outputs.

Id. at 8:4–37.

F. Prior Art Relied Upon by Petitioner

Petitioner relies on the following references:[1]

References		Date	Exhibit
Richardson	US Pub. App. 2013/0154543 A1	Published June 20, 2013	Ex. 1006
Klang	US Patent No. 6,424,158 B2	Issued July 3, 2002	Ex. 1007
Lei	US Patent No. 9,954,391 B2	Issued Apr. 24, 2018; Filed Nov. 8, 2013	Ex. 1008
Krieger	US Pub. App. 2004/0130298 A1	Published July 8, 2004	Ex. 1009
Wanzong	US Patent No. 5,319,298	Issued June 7, 1994	Ex. 1010
Baxter	WO 2010/129723 A2 (International Published Pat. App.)	Published Nov. 11, 2010	Ex. 1011
Epower-20	Product Brochure for Model E-Power-20B, Shenzhen Carku Technology Co., Ltd.	Allegedly Distributed Apr. 15 – May 5, 2014, at "2014 Canton Fair"	Ex. 1012

[1] The '015 patent issued from Application 14/325,938, filed July 8, 2014, which is a continuation of Application PCT/US2014/045434, filed July 3, 2014. Ex. 1001 at Codes [21], [22], [63].

References		Date	Exhibit
Epower-21	Product Brochure for Model E-Power-21, Shenzhen Carku Technology Co., Ltd.	Allegedly Distributed Apr. 15 – May 5, 2014, at "2014 Canton Fair"	Ex. 1013
Richardet	US Patent 8,172,603 B1	Issued May 8, 2012	Ex. 1014

Petitioner also relies on the Declarations of James L. Kirtley, Jr., Ph.D. (Exs. 1002, 1050) and Xingliang Lei (Ex. 1022).

G. Asserted Grounds of Unpatentability

Petitioner asserts that the challenged claims are unpatentable on the following grounds:

Claim(s) Challenged	**35 U.S.C. §**[2]	**Basis**
1, 7–9, 15, 17–21	102	Richardson
2, 3, 12–14, 23	103	Richardson, Lei
4, 5	103	Richardson, Krieger
6	103	Richardson, Wanzong
16	103	Richardson, Baxter
10–13	103	Richardson and either Epower-20 or Epower-21
22	103	Richardson, Richardet
1, 17, 21	102	Klang
4, 5	103	Klang, Krieger
22	103	Klang, Richardet
23	103	Klang, Lei

[2] The Leahy-Smith America Invents Act ("AIA"), Pub. L. No. 112–29, 125 Stat. 284, 287–88 (2011), revised 35 U.S.C. §§ 102 and 103 effective March 16, 2013. Because the challenged patent has an effective filing date after March 16, 2013 (Ex. 1001, Codes (22), (63)), we refer to the post-AIA versions of §§ 102 and 103.

II. ANALYSIS

To prevail in its challenge to Patent Owner's claims, Petitioner must demonstrate by a preponderance of the evidence that the claims are unpatentable.[3] 35 U.S.C. § 316(e) (2018); 37 C.F.R. § 42.1(d). That burden never shifts to the patentee. *Dynamic Drinkware, LLC v. Nat'l Graphics, Inc.*, 800 F.3d 1375, 1378 (Fed. Cir. 2015).

A. Level of Ordinary Skill

Petitioner asserts that in the relevant time frame, a person of ordinary skill in the art ("POSITA") would have had "a minimum of a bachelor's degree in electrical engineering or its equivalent and two years of experience in electrical engineering with some experience in design of battery charging systems." Pet. 9. Petitioner also contends that graduate education could substitute for professional experience, and that significant experience in the field could substitute for formal education. *Id.* (citing Ex. 1002 ¶ 14).

Patent Owner has not proposed a description of the level of ordinary skill in the art or disputed Petitioner's articulation. Petitioner's articulation of the level of ordinary skill in the art is supported by the Declaration of Dr. Kirtley. Ex. 1002 ¶ 14. It also appears consistent with what is reflected by the content of the applied prior art references. *Cf. Okajima v. Bourdeau*, 261 F.3d 1350, 1354–55 (Fed. Cir. 2001) (the applied prior art may reflect an appropriate level of skill).

---

[3] The burden of showing something by a preponderance of the evidence requires the trier of fact to believe that the existence of a fact is more probable than its nonexistence before the trier of fact may find in favor of the party who carries the burden. *Concrete Pipe & Prods. of Cal., Inc. v. Constr. Laborers Pension Tr. for S. Cal.*, 508 U.S. 602, 622 (1993).

We adopt Petitioner's articulation of the level of ordinary skill in the art, but delete the qualifier "a minimum of" for the level of education to keep that level from being vague and extending to a range that corresponds to the skill level of an expert. Thus, we regard the level of ordinary skill as being at the level of a person with "a bachelor's degree in electrical engineering or its equivalent and two years of experience in electrical engineering with some experience in design of battery charging systems."

B. Claim Construction

We use the same claim construction standard that would be used to construe claims in a civil action under 35 U.S.C. § 282(b), including construing the claim in accordance with the ordinary and customary meaning of such claim as understood by one of ordinary skill in the art and the prosecution history pertaining to the patent. 37 C.F.R. § 42.100(b) (2019). Thus, we apply the claim construction standard from *Phillips v. AWH Corp.*, 415 F.3d 1303 (Fed. Cir. 2005) (en banc).[4]

Claim terms are generally given their ordinary and customary meaning as would be understood by one with ordinary skill in the art in the context of the specification, the prosecution history, other claims, and even extrinsic evidence including expert and inventor testimony, dictionaries, and learned treatises, although extrinsic evidence is less significant than the intrinsic record. *Phillips*, 415 F.3d at 1312–17. Usually, the specification is dispositive, and it is the single best guide to the meaning of a disputed term. *Id.* at 1315.

[4] Petitioner asserts that "[claim construction] standards applied during IPR are different from those in litigation." Pet. 10 n.2. That is incorrect.

EXHIBIT 1014
Petitioner ADC (IPR2024-00671)

The specification may reveal a special definition given to a claim term by the patentee, or the specification or prosecution history may reveal an intentional disclaimer or disavowal of claim scope by the inventor. *Id.* at 1316. If an inventor acts as his or her own lexicographer, the definition must be set forth in the specification with reasonable clarity, deliberateness, and precision. *Renishaw PLC v. Marposs Societa' per Azioni*, 158 F.3d 1243, 1249 (Fed. Cir. 1998). The disavowal, if any, can be effectuated by language in the specification or the prosecution history. *Poly-America, L.P. v. API Indus., Inc.*, 839 F.3d 1131, 1136 (Fed. Cir. 2016).

Only those claim terms that are in controversy need to be construed, and only to the extent necessary to resolve the controversy. *Nidec Motor Corp. v. Zhongshan Broad Ocean Motor Co.*, 868 F.3d 1013, 1017 (Fed. Cir. 2017); *Wellman, Inc. v. Eastman Chem. Co.*, 642 F.3d 1355, 1361 (Fed. Cir. 2011); *Vivid Techs., Inc. v. Am. Sci. & Eng'g, Inc.*, 200 F.3d 795, 803 (Fed. Cir. 1999).

Petitioner proposes a construction relating to four terms in claim 1: (1) "reverse polarity sensor," (2) "vehicle battery isolation sensor," (3) "input signals from said vehicle isolation sensor and said reverse polarity sensor," and (4) "output port." Pet. 11. Petitioner states that its proposed claim constructions "are the same as the constructions made in the Shenzen Dika Order (Ex. 1005 at 14–15) and the SmarTech Order (Ex. 1017 at 20–31)," claim construction orders entered in related district court litigations. *Id.* at 10. Patent Owner stated in the Preliminary Response that "Patent Owner will agree that the claim constructions set forth by Petitioner that were adopted in two pending litigations should be applied at this stage." Prelim. Resp. 7. In the Patent Owner Response, Patent Owner states:

"Patent Owner continues to agree that these constructions are appropriate." PO Resp. 11.

According to Petitioner, in the context of claim 1, "reverse polarity sensor" is a reverse polarity sensor "separate from the vehicle battery isolation sensor." Pet. 11. We have reviewed the Specification of the '015 patent and have no reason to disagree with the parties and the district courts. We adopt the construction that "reverse polarity sensor" is "separate from the vehicle battery isolation sensor."

According to Petitioner, in the context of claim 1, "vehicle battery isolation sensor" is a vehicle battery isolation sensor "separate from the reverse polarity sensor." Pet. 11. We have reviewed the Specification of the '015 patent and have no reason to disagree with the parties and the district courts. We adopt the construction that "vehicle battery isolation sensor" is "separate from the reverse polarity sensor."

According to Petitioner, in the context of claim 1, "input signals from said vehicle isolation sensor and said reverse polarity sensor" are "[d]istinct input signals from said vehicle isolation sensor and said reverse polarity sensor, respectively." Pet. 11. We have reviewed the Specification of the '015 patent and have no reason to disagree with the parties and the district courts. We adopt the construction that "input signals from said vehicle isolation sensor and said reverse polarity sensor" are "distinct input signals from said vehicle isolation sensor and said reverse polarity sensor, respectively."

According to Petitioner, in the context of claim 1, "output port" is a "[c]omponent through which power from an internal power supply is transmitted." Pet. 11. We have reviewed the Specification of the '015

patent and have no reason to disagree with the parties and the district courts that in the context of claim 1, power from an internal power supply is transmitted through the output port. We agree that, in the context of claim 1, "output port" is a "component through which power from an internal power supply is transmitted."

Limitation 1F ["1.f" and "1.g"]

In the Patent Owner Response, Patent Owner proposes to construe "element 1F" of claim 1. PO Resp. 12. Based on the discussion appearing on pages 12–14 of the Patent Owner Response, it is clear that what Patent Owner refers to as limitation 1F is actually the two limitations "1.f" and "1.g" in the above-quoted text of claim 1. *Id.* at 12–14. That is confirmed by the Patent Owner's reproduction of the text of limitations "1.f" and "1.g" in the Sur-Reply as what it refers to as limitation 1F. Sur-Reply 4–5. We understand and treat Patent Owner as using the identification 1F to refer to limitations "1.f" and "1.g."

Limitation "1.f" reads as follows: "a microcontroller configured to receive input signals from said vehicle isolation sensor and said reverse polarity sensor, and to provide an output signal to said power switch." Ex. 1001, 8:23–26. Limitation "1.g" continues from limitation "1.f" and adds:

> such that said power switch is turned on to cause said internal power supply to be connected to said output port in response to signals from said sensors indicating the presence of a vehicle battery at said output port and proper polarity connection of positive and negative terminals of said vehicle battery with said positive and negative polarity outputs, and is not turned on when signals from said sensors indicate either the absence of a vehicle battery at said output port or improper polarity connection of

> positive and negative terminals of said vehicle battery with said positive and negative polarity outputs.

Id. at 8:26–37.

Patent Owner asserts:

> Element 1F can be thought of as comprising two limitations. The first limitation describes the conditions necessary for the power switch to be turned on, in response to the signals from the two sensors. This can be referred to as the Trigger Limitation. The second limitation describes how the power switch must remain off if either sensor produces an incorrect signal. This can be referred to as the Fail Safe Limitation. (Wood Decl. ¶61.)

PO Resp. 12. Patent Owner further asserts: "a proper interpretation of this limitation gives weight not only to the circumstances in which the power switch is **turned on** (closed), but the circumstances in which the power switch must **remain off** (open)." *Id.* According to Patent Owner, referring to this alleged "Fail Safe Limitation":

> What this means is that the microprocessor must verify that neither sensor is providing an incorrect reading, not just "before" turning the power switch on but when the power switch is turned on. From a claim construction standpoint, therefore, the Fail Safe Limitation should be interpreted to mean that "the microprocessor verifies the presence of correct sensor signals when it sends an output signal to close the power switch." (Wood Decl. ¶65.)

Id. at 13–14.

We do not disagree that limitation 1F logically or nominally can be thought of as two limitations referred to by Patent Owner as a "Trigger" and a "Fail Safe." But they are two sides of the same coin, not a distinct determination from each other. The same check could determine both. Specifically, if a vehicle battery is absent, or if a vehicle battery is reverse connected, then the Fail Safe condition is met to keep the microprocessor

from proceeding to close the switch, but at the same time the Trigger condition is not met to trigger closing of the power switch. And if a vehicle battery is present and properly connected, then the Fail Safe condition is not met to keep the power switch from closing, but the Trigger condition is met to trigger closing of the power switch. Thus, what Patent Owner refers to as a "Trigger" and a "Fail Safe" need not be independent or distinct from each other. Determination of one could determine the other. Regarding them logically as two limitations does not require them to be independent of each other. One test could determine both.

We disagree with Patent Owner's contention that based on the "Fail Safe" limitation, "the microprocessor must verify that neither sensor is providing an incorrect reading, not just 'before' turning the power switch on but when the power switch is turned on." PO Resp. 13. We also disagree with Patent Owner's contention that the microprocessor must perform the Fail Safe test a second time to verify the presence of correct sensor signal when, i.e., at the moment, it sends an output signal to close the power switch. *Id.* at 14. For reasons discussed below, the claim does not require a re-test or subsequent verification because at the time the Trigger condition is met, for the microprocessor to be triggered to close the power switch, the Fail Safe condition would not be met.

None of the claims recites a verification function that is carried out subsequent to the microprocessor determining that a vehicle battery is present and is properly connected and just prior to closing of the power switch. The Specification of the '015 patent also does not identify, refer to, or discuss any "verification" function of the microprocessor subsequent to its determining that a vehicle battery is present and is properly connected.

Whatever unexpected condition that may occur between determining the Trigger condition and actual closing of the power switch is, e.g., the charging clamp falling off the vehicle battery for whatever reason, is accepted in the context of the '015 patent as a normal operational margin. The '015 patent does not demand or require absolute perfection, and it reasonably could not. For instance, lightening could strike the connection, or another vehicle may crash into the vehicle being charged. Both circumstances can undo the proper connection that was previously made.

Patent Owner relies on paragraph 65 of Dr. Wood's Declaration (Ex. 2016). PO Resp. 13–14. Dr. Wood, however, provides no explanation beyond referring to the claim language which, as we discussed above, does not require subsequent verification. Ex. 2016 ¶ 65. Patent Owner also relies on paragraph 63 of Dr. Wood's Declaration. There, Dr. Wood refers to "the importance of ensuring that the switch remains off whenever the sensors indicate an error." Ex. 2016 ¶ 63. But Dr. Wood does not explain why absolute perfection, or a "guarantee," is required by the claim, such that an additional verification function is necessary after initially determining that the conditions are proper for closing the power switch. *Id.*

Further, Mr. James Richard Stanfield, a named inventor of the '015 patent, testified at deposition in this proceeding about the operation of the disclosed device of the '015 patent with regard to the turning on or not turning on of the power switch on the basis of sensor inputs. Ex. 1049, 213–214. We do not observe where Mr. Stanfield mentioned or discussed any need or requirement to conduct subsequent verification at the exact moment of closing the power switch, if a determination already has been made that the conditions are proper for closing the power switch.

Patent Owner asserts that the Fail Safe limitation was added during prosecution to overcome prior art. Sur-Reply, 4. Petitioner does not disagree. Reply, 2–3. We see Patent Owner's noting that the limitation was added to overcome prior art as urging that the limitation is significant and cannot be ignored. We agree that it is significant and cannot be ignored. But that does not mean it requires subsequent verification of the Trigger condition at the time of actually closing the power switch, if it already has been determined that the condition is appropriate for closing the power switch. The limitation has significance in determining that only one of the two sensors is providing an "OK" indication, and having that determination would result in the microprocessor not proceeding to close the switch. Without this limitation, it would still be OK for the microprocessor to proceed to close the power switch if just one of the two sensors yields an "OK" indication. Thus, we can accord weight to this recitation without reading into the claims a subsequent verification requirement at the time of closing the power switch, if it has already been determined that the conditions are proper for closing the power switch.

Petitioner asserts that Patent Owner's proposal is contrary to the litigation position it has taken before a district court. Reply 4–5. Patent Owner states that Petitioner only provided small excerpts of Patent Owner's expert report in related district court litigation, and that the bulk of the Patent Owner's expert report was designated "Confidential – Attorney's Eyes Only." Paper 58, 9–10. Patent Owner further asserts that "the positions taken by Patent Owner in its infringement litigations are fully consistent with its position here." *Id.* at 10. The evidence of record is insufficient for us to find that Patent Owner's position here contradicts the positions it has

taken in related infringement litigations. We do not so conclude. Accordingly, the alleged inconsistency is not a reason we disagree with Patent Owner's proposed claim construction.

In summary, limitation 1F (1.f and 1.g) does not, as Patent Owner contends, require that based on the Fail Safe limitation, "the microprocessor must verify that neither sensor is providing an incorrect reading, not just 'before' turning the power switch on but when the power switch is turned on." PO Resp. 13. We conclude that no subsequent verification is required once it has been determined that the condition is proper for closing the power switch.

C. Alleged Anticipation of Claims 1, 7, and 21 by Klang

1. The Law on Anticipation

To establish anticipation, each and every element in a claim, arranged as recited in the claim, must be found in a single prior art reference. *Therasense, Inc. v. Becton, Dickinson & Co.*, 593 F.3d 1325, 1332 (Fed. Cir. 2010); *Net MoneyIN, Inc. v. VeriSign, Inc.*, 545 F.3d 1359, 1369 (Fed. Cir. 2008); *Karsten Mfg. Corp. v. Cleveland Golf Co.*, 242 F.3d 1376, 1383 (Fed. Cir. 2001). The applied reference "need not satisfy an *ipsissimis verbis* test." *In re Gleave*, 560 F.3d 1331, 1334 (Fed. Cir. 2009); *In re Bond*, 910 F.2d 831, 832–33 (Fed. Cir. 1990). Identity of terminology between the prior art reference and the claim is not required.

2. Overview of Klang

Klang relates to an apparatus and method for rapidly carrying out diagnostic tests on lead-acid batteries and charging such batteries if appropriate. Ex. 1007, 1:15–19. It relies on the known fact that battery

EXHIBIT 1014
Petitioner ADC (IPR2024-00671)

resistance can be characterized by discharging at various rates and measuring the resulting voltage. *Id.* at 3:5–9. In that context, it was known that current versus voltage relationship is linear and the proportionality constant is the resistance of the battery in a discharging mode. *Id.* at 3:9–13. Klang's diagnostic test unit utilizes a charger combined with a rapidly variable load controlled by signals to and from a microprocessor. *Id.* at 3:15–18. Figure 1 of Klang illustrates the diagnostic test unit and is reproduced below:

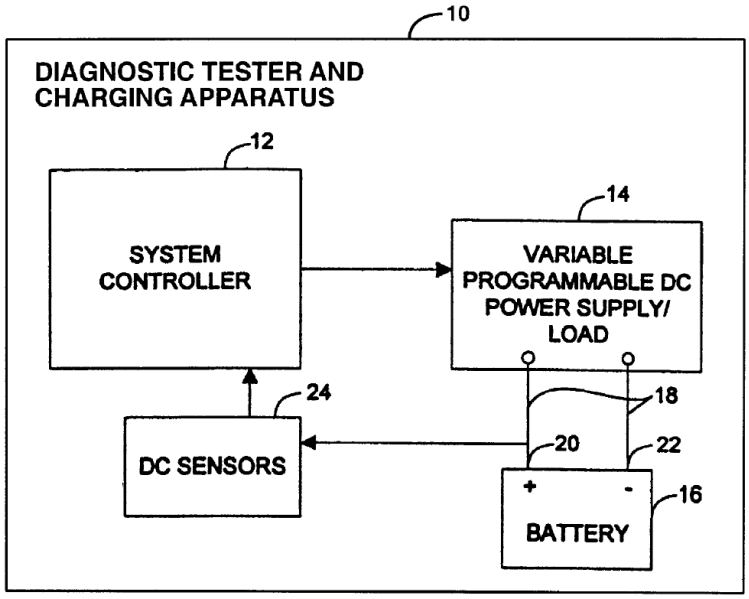

FIG._1

Figure 1 is a block diagram of Klang's diagnostic test unit. *Id.* at 3:66–67. Among other steps, Klang describes determining whether a battery is connected, and also whether the battery is connected in reverse polarity. *Id.* at 8:55–65.

Figure 2 illustrates the system controller and is reproduced below:

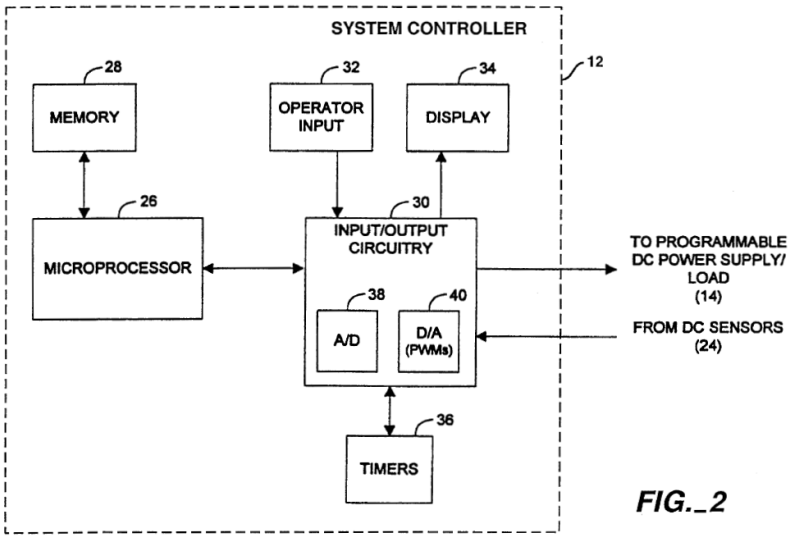

Figure 2 is a block diagram of a system controller, which includes microprocessor 6, memory 28, and input/output circuitry 30. *Id.* at 5:27–29. Input/Output circuitry 30 is coupled to operator input 32, and also display 34, which displays relevant output messages such as the status of diagnostic testing or charging or a prompt for the operator to enter commands or data. *Id.* at 5:34–39. Input/Output circuitry 30 is coupled to the power supply, load 14, microprocessor 26, and sensors 24. *Id.* at 5:39–46.

Figure 3 illustrates sensors in the diagnostic unit and is reproduced below:

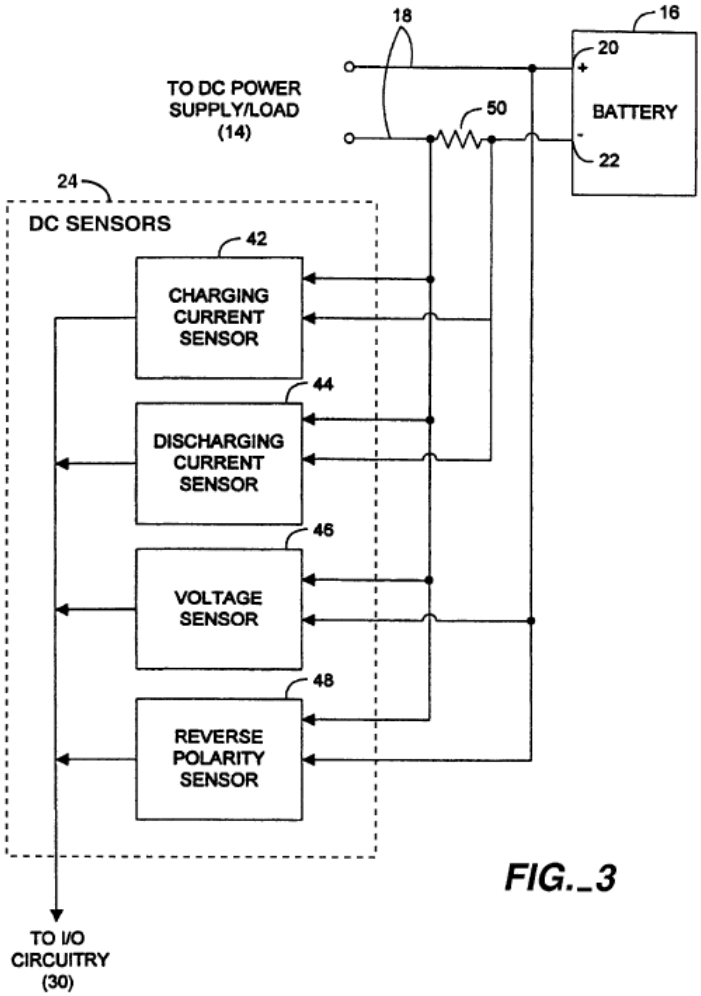

FIG._3

Figure 3 is a block diagram of DC sensors for sensing voltage and current across the battery terminals according to the Klang. *Id.* at 4:4–6. Voltage sensor 46 measures the voltage across terminals 20 and 22 of battery 16. *Id.* at 6:12–14. Reverse polarity sensor 48 also is connected across battery terminals 20 and 22, and senses negative voltage indicating that the battery leads are connected backwards. *Id.* at 6:20–22. Charging current sensor 42 and discharging current sensor 44 are connected to measure the current across shunt resistor 50. *Id.* at 6:27–29. Charging current sensor 42 measures current flow into the battery. *Id.* at 6:30–32. Discharging current sensor 44 is used to measure current flow out of the battery. *Id.* at 6:38–39.

Figure 4 illustrates Klang's variable power supply and load and is reproduced below:

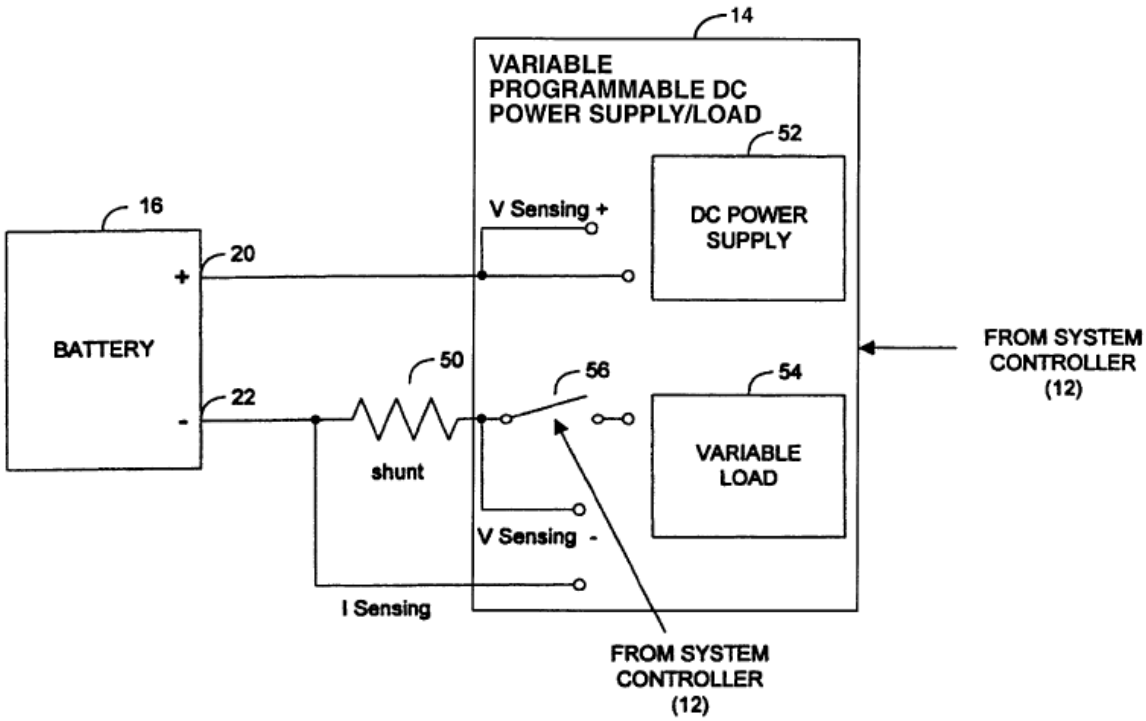

FIG._4

Figure 4 is a block diagram of a variable programmable DC power supply and load for charging and discharging batteries. *Id.* at 4:7–9.

Variable programmable DC power supply and load 14 includes DC power supply 52 and variable load 54. *Id.* at 6:47–49. The amount of current or voltage supplied by power supply 14 is determined by system controller 12, which sends commands to power supply 14. *Id.* at 6:52–54. With regard to connecting the variable programmable power supply and load to the vehicle battery, Klang describes as follows:

> During the diagnostic test or charge, the system controller 12 may control means 56 such as a relay, a switch or the like to automatically connect the battery 16 to the circuit. For example, the switch 56 is open while measuring the open circuit voltage of the system. Conversely, the switch 56 is closed allowing current

> to flow across a shunt resistor 50 to enable charging, discharging and current measurements to be taken.

Id. at 7:7–14.

3. Claim 1

Claim 1 begins with this recitation: "Apparatus for jump starting a vehicle engine." Ex. 1001, 8:4. Petitioner asserts that this preamble does not limit the claim, because (1) it only recites an intended use of an apparatus, (2) it imposes no structural requirement beyond those recited in the body of the claim, (3) no argument depending on "jump starting a vehicle engine" was made to overcome prior art during prosecution, and (4) "jump starting a vehicle engine" does not provide antecedent basis for anything in the body of the claim. Pet. 68. Patent Owner has not submitted any contrary argument in this regard. We agree with Petitioner that the recitation merely articulates an intended use, and, thus, is non-limiting. In any event, satisfaction of all of the elements in the body of the claim, as explained below, also would satisfy the intended use of "jump starting a vehicle engine."

Claim 1 recites "an internal power supply." *Id.* at 8:6. Petitioner asserts that Klang describes that its device includes an internal power supply. Pet. 69–70 (citing Ex. 1007, 5:9–17). Patent Owner does not dispute the assertion. Petitioner's assertion is supported by the cited description of Klang. Ex. 1007, 5:10–13. We are persuaded by Petitioner that Klang's device includes an internal power supply.

Claim 1 recites "an output port having positive and negative polarity outputs." Ex. 1001, 8:7–8. Petitioner asserts that Klang's device includes an output port having positive and negative polarity outputs through which power from the internal power supply is transmitted. Pet. 71 (citing

Ex. 1007, Fig. 1, 5:17–19). Patent Owner does not dispute the assertion. Petitioner's assertion is supported by the cited description of Klang. Ex. 1007, Fig. 1, 5:17–19. We are persuaded by Petitioner that Klang's device includes "an output port having positive and negative polarity outputs."

Claim 1 recites "a vehicle battery isolation sensor connected in circuit with said positive and negative polarity outputs, configured to detect presence of a vehicle battery connected between said positive and negative polarity outputs." Ex. 1001, 8:9–12. Petitioner cites to voltage sensor 46 of Klang's Figure 3 as meeting this limitation. Pet. 72–73. As illustrated, voltage sensor 46 is connected to measure the voltage across terminals 20 and 22 of battery 16. Ex. 1007, Fig. 3.

Petitioner explains as follows: "The voltage sensor 46 detects the presence of the battery 16 by detecting whether it is connected. 'If the OCV [open circuit voltage] is greater than -0.5V, at step 148, the OCV is compared to an extremely low voltage to determine whether a battery is connected.'" Pet. 73 (citing Ex. 1007, 8:55–58). Petitioner also explains that Figure 3 of Klang shows voltage sensor 46 as separate from reverse polarity sensor 48. Pet. 73. Petitioner's assertions are supported by the cited disclosures of Klang.

Patent Owner has not, in the Patent Owner Response, set forth contrary arguments regarding this vehicle isolation sensor limitation. We are persuaded by Petitioner that Klang's device includes "a vehicle battery isolation sensor connected in circuit with said positive and negative polarity outputs, configured to detect presence of a vehicle battery connected between said positive and negative polarity outputs."

Claim 1 recites "a reverse polarity sensor connected in circuit with said positive and negative polarity outputs, configured to detect polarity of a vehicle battery connected between said positive and negative polarity outputs and to provide an output signal indicating whether positive and negative terminals of said vehicle battery are properly connected with said positive and negative outputs of said output port." *Id.* at 8:13–20. Petitioner cites to reverse polarity sensor 48 of Klang's Figure 3 as meeting this limitation. Pet. 75–76. As illustrated, reverse polarity sensor 48 is connected to measure the voltage across terminals 20 and 22 of battery 16. Ex. 1007, Fig. 3.

Petitioner explains as follows:

> Referring to FIG. 3, Klang states: "[t[he reverse polarity sensor 48, connected in a like manner across the battery terminals 20, 22, senses negative voltage indicating that the battery leads are connected backwards." Ex. 1007, 6:20–23. Klang's reverse polarity sensor provides an output signal (sensed negative voltage) indicating whether the battery has a proper polarity connection. Klang states: "[i]f the start button has not been pressed, at step 144, the OCV [battery open circuit voltage] is compared to a low negative voltage to determine whether the conducting cables 18 are properly connected to the battery 16. If the OCV is less than -0.5V, the method proceeds at step 146 to notify the operator that the leads are reversed." Ex. 1007, 8:55–60.

Pet. 75–76. Petitioner also explains that Figure 3 of Klang shows reverse voltage sensor 48 as separate from voltage sensor 46. Pet. 76. Petitioner's assertions are supported by the cited disclosures of Klang.

Patent Owner has not, in the Patent Owner Response, set forth contrary arguments regarding this reverse polarity sensor limitation. We are persuaded by Petitioner that Klang's device includes "a reverse polarity

sensor connected in circuit with said positive and negative polarity outputs, configured to detect polarity of a vehicle battery connected between said positive and negative polarity outputs and to provide an output signal indicating whether positive and negative terminals of said vehicle battery are properly connected with said positive and negative outputs of said output port."

Claim 1 recites "a power switch connected between said internal power supply and said output port." Ex. 1001, 8:21–22. Citing Figure 4 of Klang, Petitioner asserts that "Klang discloses a switch 56 connected between the power supply 52 and the leads (output port) connected to the battery 16." Pet. 77. Petitioner explains that "[d]uring the diagnostic test or charge, the system controller 12 may control means 56 such as a relay, a switch or the like to automatically connect the battery 16 to the circuit. . . ." *Id.* at 77–78 (citing Ex. 1007, 7:7–14). Patent Owner does not dispute the assertions. Petitioner's assertions are supported by the cited disclosures of Klang. We are persuaded by Petitioner that Klang's device includes "a power switch connected between said internal power supply and said output port."

Claim 1 recites limitation "1.f": "a microcontroller configured to receive input signals from said vehicle isolation sensor and said reverse polarity sensor, and to provide an output signal to said power switch." Ex. 1001, 8:23–26. Petitioner identifies Klang's system controller 12, shown in Figure 1, as the claimed microcontroller. Pet. 78–79. Figure 1, illustrating Klang's test unit, is reproduced below:

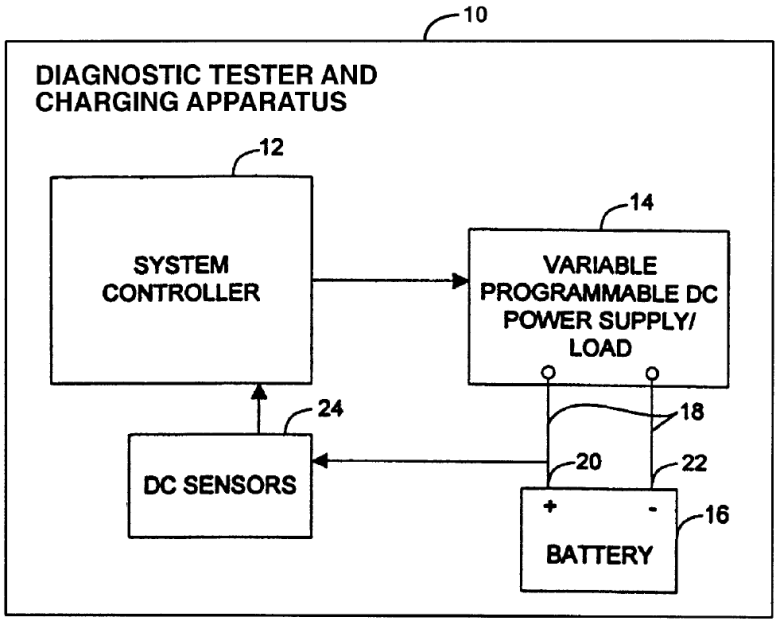

FIG._1

Figure 1 is a block diagram of Klang's diagnostic test unit. Ex. 1007, 3:66–67. Klang describes that "[t]he DC sensors [including voltage sensor 46 and reverse polarity sensor 48 shown in Klang's Figure 3], which sense current and voltage across the battery terminals 20, 22, return the values thereof to the system controller 12 to which they are coupled." *Id.* at 5:22–25 (cited by Petitioner at Pet. 79). Klang further describes that the system controller 12 is coupled to the power supply 14 and includes control circuitry for regulating the output of power supply 14." *Id.* at 5:13–16 (cited by Petitioner at Pet. 78). Petitioner notes that power switch 56 is within variable programmable DC power supply/load 14, citing Figure 4 of Klang. Pet. 78. These assertions are supported by the cited disclosures of Klang.

Claim 1, further with respect to operation of the claimed microcontroller, recites limitation "1.g":

> such that said power switch is turned on to cause said internal power supply to be connected to said output port in response to signals from said sensors indicating the presence of a vehicle

> battery at said output port and proper polarity connection of positive and negative terminals of said vehicle battery with said positive and negative polarity outputs, and is not turned on when signals from said sensors indicate either the absence of a vehicle battery at said output port or improper polarity connection of positive and negative terminals of said vehicle battery with said positive and negative polarity outputs.

Ex. 1001, 8:26–37.

Figure 5 is a logical flow diagram illustrating the steps in the overall performing the diagnostic battery test and battery charging procedures according to Klang. Ex. 1007, 4:10–12; 7:49–57. Figure 6 is a logical flow diagram more particularly illustrating the start-up portion of Klang's procedure. *Id.* at 4:13–15. Petitioner refers to the flow charts shown in Klang's Figures 5 and 6. Pet. 84–85. Box 102, immediately after "START" box 100, is labeled "START UP PROCEDURE (CONNECT AND INPUT BATTERY PARAMETERS)." Ex. 1007, Fig. 5. Petitioner asserts that in step 102, the start-up procedure is invoked "wherein proper connection of the battery to the diagnostic unit is verified." Pet. 83 (citing Ex. 1007, 7:49–57). Petitioner further notes that the "start-up" process is more particularly illustrated in Figure 6 of Klang. *Id.*

A pertinent part of Figure 5, illustrating the overall procedure according to Klang, from starting up the device at step 100 to starting to charge a depleted battery at step 114, is reproduced below:

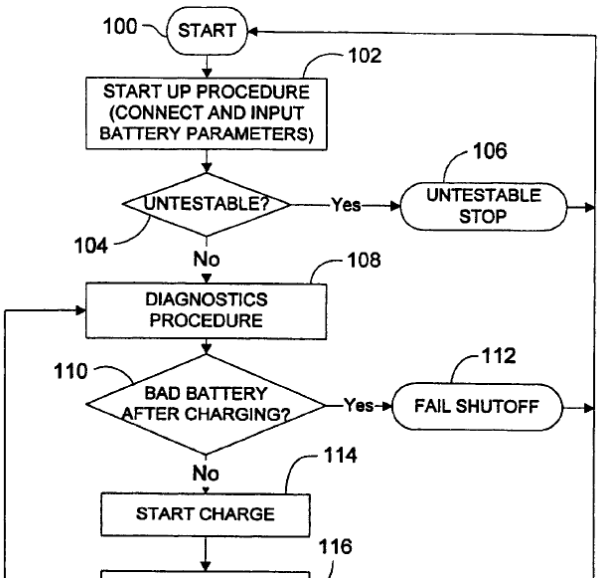

Figure 5 is a logic flow diagram illustrating the steps involved in performing the diagnostic battery test and battery charge procedure of Klang. Ex. 1007, 4:10–12.

A pertinent portion of Figure 6, illustrating the particulars of the start-up procedure relied on by Petitioner, is reproduced below:

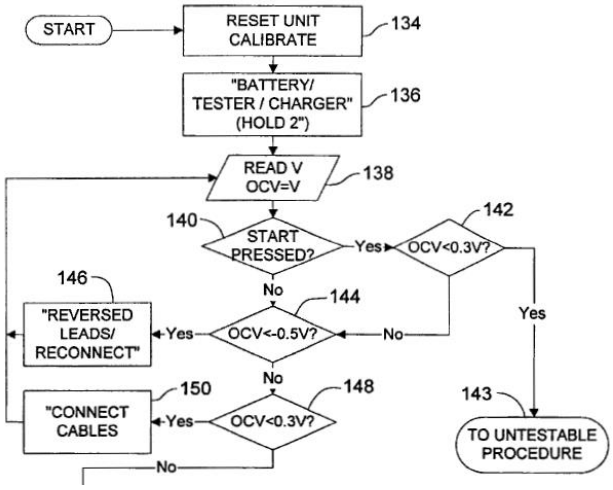

Figure 6 shows the logic flow of the steps involved in starting up Klang's diagnostic tester and charging system. Ex. 1007, 4:14–16.

Klang describes that, at step 144, a determination is made and if OCV is less than –0.5V, "the method proceeds at step 146 to notify the operator

that the leads are reversed." Ex. 1007, 8:55–60 (cited by Petitioner at Pet. 86). Klang describes that, at step 148, a determination is made and if OCV is less than 0.3V, "indicating that a battery is not connected, the method proceeds at step 150 to display a message instructing the operator to connect the cables." Ex. 1007, 8:60–65 (cited by Petitioner at Pet. 86). Referring to the flow diagram of Figure 5, Petitioner explains that it is only after the start-up process of Figure 6 has been completed that logic flow returns to the path in Figure 5 and then at step 114 in Figure 5, "the charger will be turned on and the battery will be charged." Pet. 83 (citing Ex. 1007, 8:5–8).

On the basis of the foregoing, Petitioner contends that Klang discloses the above-quoted limitation regarding the microcontroller, where the power switch is turned on "in response to signals from said sensors indicating the presence of a vehicle battery at said output port and proper polarity connection of positive and negative terminals of said vehicle battery with said positive and negative polarity outputs," and is not turned on "when signals from said sensors indicate either the absence of a vehicle battery at said output port or improper polarity connection of positive and negative terminals of said vehicle battery with said positive and negative polarity outputs." Pet. 82. Petitioner's position is supported by the cited disclosures of Klang.

Notwithstanding contrary argument of Patent Owner with respect to limitations "1.f" and "1.g," which Patent Owner refers to as limitation 1F, discussed below, we are persuaded by Petitioner that Klang discloses limitation 1F (limitations "1.f" and "1.g").

Patent Owner relies on the complete flow chart in Figure 6 of Klang. PO Resp. 47–48. The complete chart of Figure 6, color annotated by Patent Owner, is reproduced below:

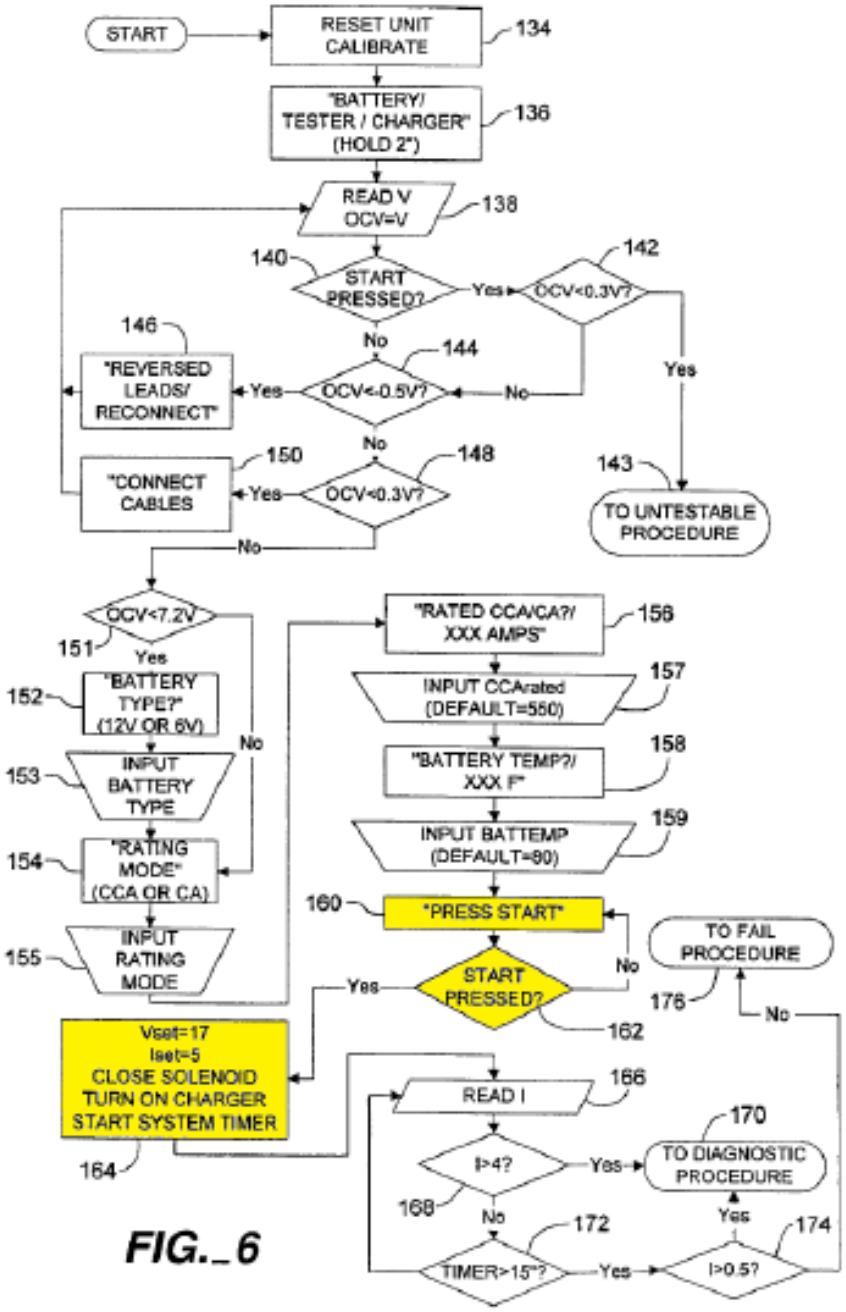

FIG._6

Figure 6 is a logic flow diagram illustrating the steps in starting up Klang's diagnostic tester and charging system. Ex. 1007, 4:14–16.

Patent Owner argues that the complete flow chart in Figure 6 of Klang shows that power switch 56, a solenoid, is closed at step 164, upon detecting that the START button has been pressed by the operator, and thus the power switch is turned on in response to the operator pressing the START button, not "in response to signals from said sensors indicating the presence of a vehicle battery at said output port and proper polarity connection of positive and negative terminals of said vehicle battery with said positive and negative polarity outputs" as claimed. P.O. Resp. 49–50 (emphasis omitted).

Patent Owner asserts that "[e]ven assuming that Klang disclosed every other limitation of claim 1, Klang is explicit that the solenoid switch is instructed to close in response to manual intervention of the user — specifically when the user presses the start button." *Id.* at 50. Patent Owner further asserts that "[n]either the Petition nor Petitioner's expert address the explicit disclosure that the Klang controller turns on the solenoid in response to manual intervention of the user." *Id.* Patent Owner states that "Klang is explicit that once the user presses the start button (step 162), the solenoid is closed (step 164)." *Id.* at 51. Patent Owner further asserts that "[t]here is no suggestion that the controller turns on the solenoid in response to either, let alone both, of these signals as required by claim 1." *Id.*

Patent Owner's argument is misplaced and an over-simplification of the operative steps of Klang. The pertinent disclosure of Klang is this:

> Once critical battery information is input into the system, at step 160 the operator is prompted to press start. The method then waits at step 162 until start is pressed . . . . Thereafter, commands are sent to close the solenoid switch 56 to allow

> current flow into the battery, to turn the charger on, and to set the start the system timer.

Ex. 1007, 9:45–54. Although it is true that the system prompts the operator to press the START button and waits for the START button to be pressed, that is not inconsistent with turning on the power switch in response to signals indicating presence of the vehicle battery and proper polarity connection to the vehicle battery.

As shown in Figure 6, step 160 is not reached until and unless the system has passed through steps 144 and 148, discussed above, which verify that vehicle battery leads are not reverse connected and that a vehicle battery is present, respectively. Thus, the closing of the solenoid or turning on of power switch 56 is in response to signals indicating presence of the vehicle battery and proper polarity connection of the vehicle battery and also to the operator pressing the START button upon being prompt to do so at step 160.

The recitation in the claim of "in response to" does not restrict the triggering sources of the response to "only" those specifically identified in the claim and nothing else. In this circumstance, the closing of the switch is in response to all three conditions, i.e., signal indicating presence of the vehicle battery, signal indicating proper polarity connection of the vehicle battery, and pressing of the START button by operator upon prompting. That meets the claim requirement of turning on the power switch in response to signals indicating presence of the vehicle battery and proper polarity connection of the vehicle battery.

Patent Owner further argues:

> In Klang, although the device does not prompt the operator to press start until after it has received correct signals from the two sensors, there is nothing that requires the operator to press start within a certain period of time. (Wood Decl. ¶ 113.) Instead,

> the system enters into wait loop until the button is pressed. Ex. 2017, Kirtley Dep., at 158.
>
> While the system is in wait mode, it is entirely possible that the cables on the battery to be charged could become dislodged, or even, due to negligence or malfeasance, reversed. (Wood Decl. ¶ 113.) In fact, Dr. Kirtley confirmed this aspect of Klang:
>
> > Q: . . . [I]s there anything in Klang that discloses that the system retests the battery connections at any time after the start prompt is given?
> >
> > A: I am not sure of such.
>
> Ex. 2017, Kirtley Dep., at 160–61.
>
> Because Klang does not verify that the sensors are still providing correct signals after the button is pressed, Klang does not ensure that the power switch is not closed when the signal from either of the sensors is incorrect. Klang thus fails to meet the Fail Safe Limitation and does not anticipate claim 1.

PO Resp. 52.

In Section II.B. above, we construed what Patent Owner regards as Limitation 1F (reproduced above as limitations "1.f" and "1.g"). We explained and determined that to meet the limitation, no verification is necessary at the time of microprocessor's closing of the power switch, so long as it has already been determined that the conditions are appropriate for the microprocessor to close the power switch. Thus, for Klang to meet the limitation, no retest or verification is necessary after the microprocessor prompts the operator to press the START button. Limitation 1F, as properly construed, tolerates possible anomalies which are unplanned.

Patent Owner asserts, and we agree, that it is "possible" that something could happen between the time that the conditions are determined as appropriate for closing the power switch and the time that the

microprocessor actually closes the power switch. But that amounts to mere speculation which does not render Klang's disclosure inapplicable. As noted above in our claim construction discussion, the claim does not require absolute perfection or a guarantee that something unplanned does not occur.

Furthermore, Klang does not include any mention of the operator, upon being prompted to press the START button, not immediately or as soon as practicable, press the START button. Nothing is described for the operator, when prompted, to do anything other than pressing the START button. Klang's Figure 6 shows a flow chart in which in Box 160 the operator is prompted to press the START button, and in the very next Box, Box 162, a check is made to see if the operator has pressed the START button. Ex. 1007, Fig. 6. Patent Owner's assertion that something possibly could happen between the time the operator is prompted and the time the operator presses the START button is high speculative and insufficient to render limitation 1F not satisfied. Possibility is not a proper test. In that regard, we note that a system malfunction possibly can occur at all times, despite having the best of designs, and that should not render a prior art reference disclosure inapplicable if it does not meet the claim when the described apparatus malfunctions.

In any event, in Klang's typical case that is the subject of Klang's description, the state of the system does not change before the user presses the START button such that the Fail-Safe condition would no longer be satisfied if re-tested. Rather, if at all, it would only be in atypical cases where the system state might change. Thus, we find that, in its description of its typical operation, Klang discloses a system that satisfies both the Trigger and Fail-Safe conditions before and at the time the START button is

EXHIBIT 1014
Petitioner ADC (IPR2024-00671)

pressed. Accordingly, Klang discloses limitation "1.g" even under Patent Owner's construction of this limitation. *See Hewlett-Packard Co. v. Mustek Sys., Inc.*, 340 F.3d 1314, 1325 n.6 (Fed. Cir. 2003) ("The anticipation analysis asks solely whether the prior art reference discloses and enables the claimed invention, and not how the prior art characterizes that disclosure or whether alternatives are also disclosed.").

For the foregoing reasons, Petitioner has proved by a preponderance of the evidence that claim 1 is anticipated by Klang.

4. Claims 7 and 21

Claims 17 and 21 each depend from claim 1, and thus incorporate all of the limitations of claim 1. 35 U.S.C. § 112(d). Claim 17 additionally recites "further comprising a visual indicator configured to warn a user when the vehicle battery is connected with reverse polarity." Ex. 1001, 9:17–19. Claim 21 additionally recites "further comprising a jumper cable device including a plug configured to plug into said output port, a pair of cables integrated with the plug at one respective end thereof and being configured to be connected to terminals of a battery at another respective end thereof." *Id.* at 10:10–4.

With respect to claim 17, Petitioner explains as follows:

> Klang states "[i]f the start button has not been pressed, at step 144, the OCV is compared to a low negative voltage to determine whether the conducting cables 18 are properly connected to the battery 16. If the OCV is less than –0.5V, the method proceeds at step 146 to notify the operator that the leads are reversed.

Pet. 87. Petitioner further asserts that Klang discloses outputting such messages on a visual display. *Id.* (citing Ex. 1007, 5:34–39). The assertion is supported by the cited disclosure of Klang, which states: "The I/O

circuitry 30 is also coupled to a display 34 that comprises the means to display relevant output messages, such as messages informing the operator on the status of diagnostic testing or charging, or messages prompting the operator to enter commands or data." Ex. 1007, 5:34–39. Further, Klang states that "the method proceeds at step 146 [Fig. 6] to notify the operator that the leads are reversed." *Id.* at 8:59–60 (cited by Petitioner at Pet. 87). Petitioner notes that in Figure 6, step 146 identifies the text "REVERSED LEADS / RECONNECT" in quotations, which further indicates that the text is displayed to the operator. Pet. 87–88.

Petitioner's assertions are supported by the cited disclosures of Klang. Patent Owner does not present counter-arguments with respect to claim 17, other than those already discussed above in the context of claim 1. We are persuaded by Petitioner that Klang discloses that its device includes "a visual indicator configured to warn a user when the vehicle battery is connected with reverse polarity."

With respect to claim 21, Petitioner identifies jumper cable 18 illustrated in Figure 3 of Klang as the claimed jumper cable device. Pet. 88. Petitioner cites to the following description in Klang: "The power supply and load 14 are coupled in a conventional manner to a battery 16 using conducting cables 18 which link the power supply and load 14 to the charging terminals 20, 22 of the battery 16." Ex. 1007, 5:17–20 (cited at Pet. 88).

Petitioner's assertions are supported by the cited disclosures of Klang. Patent Owner does not present counter-arguments with respect to claim 21, other than those already discussed above in the context of claim 1. We are persuaded by Petitioner that Klang discloses that its device includes "a

EXHIBIT 1014
Petitioner ADC (IPR2024-00671)

jumper cable device including a plug configured to plug into said output port, a pair of cables integrated with the plug at one respective end thereof and being configured to be connected to terminals of a battery at another respective end thereof."

For the foregoing reasons, Petitioner has proved by a preponderance of the evidence that claims 7 and 21 are anticipated by Klang.

D. Alleged Obviousness of Claims 4 and 5 over Klang and Krieger

1. The Law on Obviousness

A patent claim is unpatentable under 35 U.S.C. § 103 if the differences between the claimed subject matter and the prior art are such that the subject matter, as a whole, would have been obvious at the time the invention was made to a person having ordinary skill in the art to which said subject matter pertains. *KSR Int'l Co. v. Teleflex Inc.*, 550 U.S. 398, 406 (2007). The question of obviousness is resolved on the basis of underlying factual determinations including (1) the scope and content of the prior art; (2) any differences between the claimed subject matter and the prior art; (3) the level of ordinary skill in the art; and (4) when in evidence, objective evidence of nonobviousness. *Graham v. John Deere Co.*, 383 U.S. 1, 17–18 (1966).

2. Overview of Krieger

Krieger relates to a booster device used for boosting a depleted battery, and in particular to microprocessor control of the booster apparatus and a polarity protection circuit. Ex. 1009 ¶ 2. Krieger discloses a polarity protection circuit that is electrically connected to the battery to be charged, the depleted battery, and to a boosting battery or other power source. *Id.* ¶ 10. Figure 1 of Krieger is a schematic diagram and is reproduced below:

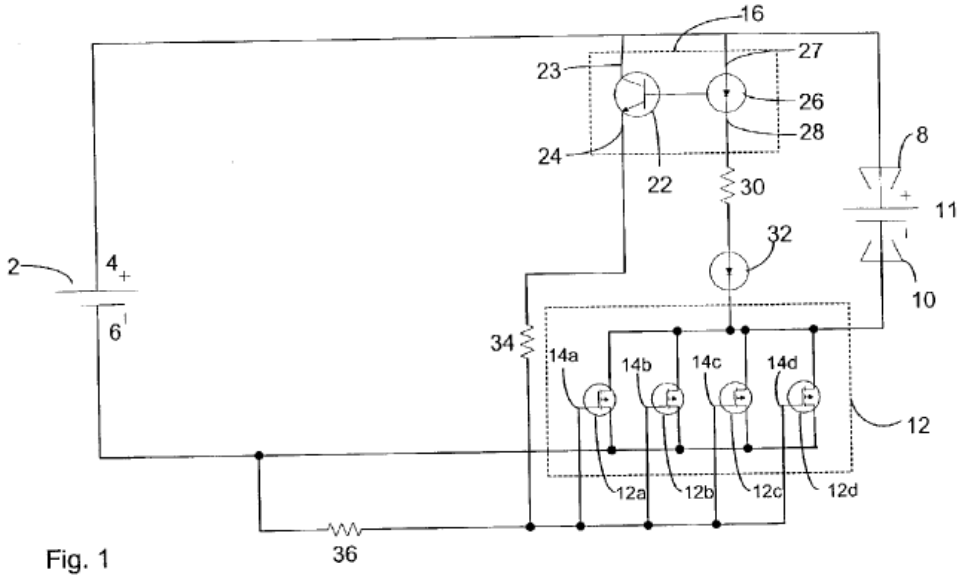

Fig. 1

Figure 1 of Krieger is a circuit schematic illustrating a polarity protection circuit. Ex. 1009 ¶ 22. Krieger describes "[t]he switch 12 is activated to complete a boosting circuit between the boosting battery 2 and the depleted battery 11 only when a correct polarity connection between the batteries is attained." *Id.* ¶ 29.

3. Claims 4 and 5[5]

Claims 4 and 5 each depend from claim 1, and thus incorporate all of the limitations of claim 1. 35 U.S.C. § 112(d). Claim 4 further recites "wherein said power switch comprises a plurality of FETs in parallel." Ex. 1001, 8:43–44. Claim 5 further recites "wherein said vehicle isolation sensor and reverse polarity sensor comprise optically coupled isolator phototransistors." *Id.* at 8:45–47.

With respect to claim 4, Petitioner asserts that Krieger discloses a power switch comprising a plurality of FETs in parallel. Pet. 47. Petitioner

[5] For claims 4 and 5, Patent Owner has not presented objective evidence of obviousness for consideration. *See* PO Resp. 41–46.

cites the following disclosure of Krieger: "The [power] switch 12 is preferabl[y] a solid state device, such as a transistor, diode, field effect transistor (FET), etc. FIG. 1 represents the switch 12 as a number [of] FETs 12a–12d connected in parallel with each other." Ex. 1009 ¶ 0030 (cited by Petitioner at Pet. 47). The assertions of Petitioner are supported by the cited disclosures of Krieger. Patent Owner does not present contrary arguments with respect to these assertions.

Petitioner notes that Krieger explains that by using a solid state switch comprising FETs, "[t]here is no need for any mechanical or electro-mechanical devices." Pet. 48 (citing Ex. 1009 ¶ 33). Petitioner explains, citing the testimony of Dr. Kirtley, that "[s]ubstituting a relay switch in [Klang's] jump starter with a solid state switch comprising a plurality of FETs would have been obvious to a POSITA to avoid or reduce electro-mechanical components, as suggested by Krieger." Pet. 48 (citing Ex. 1002 ¶ 144). Patent Owner does not present contrary arguments with regard to Petitioner's articulated reasoning for substituting Klang's relay with Krieger's solid state power switch. Petitioner's articulated reasoning has rational underpinning. We are persuaded by Petitioner that it would have been obvious to one with ordinary skill in the art to substitute Klang's relay switch with Krieger's solid state switch.

With respect to claim 5, Petitioner asserts that Krieger discloses a vehicle isolation sensor and reverse polarity sensor comprising an optically coupled phototransistor. Pet. 49. Petitioner cites the following disclosure of Krieger: "In the embodiment of FIG. 1, the polarity sensing circuit comprises an opto-isolator 16. The opto-isolator 16 comprises a phototransistor 22 and a light emitting diode (LED) 26." *Id.* (citing

EXHIBIT 1014
Petitioner ADC (IPR2024-00671)

Ex. 1009 ¶ 0032). Petitioner also asserts that "Krieger uses the opto-isolator 16 to perform the functions of both the vehicle isolation sensor and reverse polarity sensor." *Id.* at 50 (citing Ex. 1009 ¶ 0033). These assertions of Petitioner are supported by the cited disclosures of Krieger. Patent Owner does not present contrary arguments with respect to these assertions.

Petitioner asserts that in light of Krieger's disclosure, it would have been obvious to one with ordinary skill in the art "to use one opto-isolator to sense the presence of a vehicle battery and a correct polarity connection, or two opto-isolators if a POSITA wanted to use one for battery detection and another for polarity connection, e.g., for redundancy." *Id.* at 50–51. Regarding reasons to apply Krieger's teachings in Klang, Petitioner explains as follows:

> A POSITA would be particularly motivated to use opto-couplers of the type [disclosed] by Krieger for sensing the presence of a vehicle battery and a correct polarity connection because the opto-coupler used in Krieger is an inherently digital device that can be preferable over using analog inputs to the system microcontroller, which may be subject to tests to determine if the vehicle battery is present or reversed. A POSITA would be motivated to simplify the system by using an optical coupler for one or both sensing functions, e.g., to provide a compact, packaged jump starter. Ex. 1002, ¶ 150.

Pet. 51. Petitioner's assertion is supported by the cited testimony of Dr. Kirtley and has rational underpinning. Ex. 1002 ¶ 150. Patent Owner does not present contrary arguments with regard to Petitioner's articulated reasoning for constituting each of Klang's vehicle isolation sensor and reverse polarity sensor with an optically coupled isolator phototransistor. We are persuaded by Petitioner that, in light of Krieger, it would have been obvious to one with ordinary skill in the art to implement Klang's vehicle

isolation sensor and reverse polarity sensor with optically coupled isolator phototransistors.

With respect to claims 4 and 5, Patent Owner presents only the same argument it asserts with respect to claim 1, which we already have discussed and rejected above. PO Resp. 53–54. For the foregoing reasons, Petitioner has proved by a preponderance of the evidence that claims 4 and 5 are unpatentable over Klang and Krieger.

E. Alleged Obviousness of Claim 22 over Klang and Richardet

1. Overview of Richardet

Richardet relates to a battery terminal connector that provides a secure and stable connection to a motor vehicle battery. Ex. 1014, 1:60–65. Richardet also relates to providing a temporary clamping attachment to a charging battery to jump-start a car. *Id.* at 2:32–36. Petitioner cites to Figure 2A of Richardet, illustrating a battery connector assembly, reproduced below:

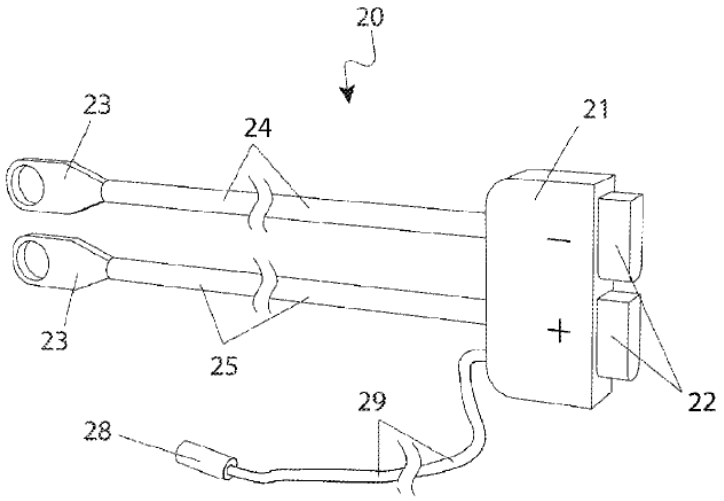

Fig. 2a

Figure 2A is a perspective view of a battery connector assembly portion 20 of a quick-release battery cable system 10. Ex. 1014, 3:5–7. Richardet describes:

> The battery connector assembly 20 comprises a first fastener 21, a pair of battery ring terminals 23, a negative battery cable 24, a positive battery cable 25, and an accessory connector 28. The battery ring terminals 23 provide an attachment means thereto a positive battery terminal 120 and a negative battery terminal 130 thereon a primary battery 100 (see FIG. 3). The battery ring terminals are attached to appropriately gauged battery cables 24, 25 comprising heavy gauged battery cables 24, 25 comprising heavily gauged conductors being approximately five (5) feet long.

Id. at 4:57–63 (cited by Petitioner at Pet. 65–66).

2. Claim 22[6]

Claim 22 depends from claim 21, which depends from claim 1, and thus incorporates all of the limitations of claims 1 and 21. 35 U.S.C. § 112(d). Claim 22 further recites "wherein said jumper cable device further comprises a pair of ring terminals configured to respectively connect said pair of cables at said another end thereof with one of a battery terminal and a battery terminal clamp." Ex. 1001, 10:15–19.

Petitioner asserts that Richardet discloses a pair of ring terminals 23 to connect a pair pf cables 24, 25 with battery terminals 120 and 130. Pet. 66. The assertion is supported by the cited disclosures of Richardet, and Patent Owner does not present contrary arguments with respect to the assertion. We are persuaded that Richardet discloses a pair of ring terminals as recited by claim 22.

---

[6] For claim 22, Patent Owner has not presented objective evidence of obviousness for consideration. *See* PO Resp. 41–46.

Petitioner notes that Richardet states, with respect to preexisting systems, that there is a need for a means to "provide a battery terminal connection which provides secure and stable connection to a motor vehicle battery or the like adaptable to a variety of common scenarios and which is simple and quick for an average user." Pet. 67 (citing Ex. 1014, 1:59–65). Petitioner asserts that using Richardet's cable system with ring terminals in Klang's battery charger would have been obvious to one with ordinary skill in the art "to provide a secure and stable connection to a motor vehicle battery in a way that is simple and quick for an average user, as suggested by Richardet." Pet. 92. The assertion is supported by the testimony of Dr. Kirtley and has rational underpinning. Ex. 1002 ¶ 203. Patent Owner does not present any contrary argument in this regard. We are persuaded that one with ordinary skill in the art would have had reason to use Richardet's cable system with ring terminals in Klang's battery charger.

With respect to claim 22, Patent Owner presents only the same argument it asserts with respect to claim 1, which we already have discussed and rejected above. PO Resp. 54. For the foregoing reasons, Petitioner has proved by a preponderance of the evidence that claim 22 is unpatentable over Klang and Richardet.

F. Alleged Obviousness of Claim 23 over Klang and Lei

1. Overview of Lei

Lei discloses an emergency power source that outputs a high current for starting a vehicle. Ex. 1008, 2:7–9. The emergency power source includes a battery pack. *Id.* at 2:13–14. Output terminals of the battery pack are connected to a high current outputting circuit for outputting a high current used for starting a vehicle. *Id.* at 2:17–20. An external smart battery

EXHIBIT 1014
Petitioner ADC (IPR2024-00671)

detection system is connected between the battery pack and the high current outputting circuit. *Id.* at 2:23–25.

2. Claim 23[7]

Claim 23 depends from claim 21, which depends from claim 1, and thus incorporates all of the limitations of claims 1 and 21. 35 U.S.C. § 112(d). Claim 23 further recites "wherein said output port and said plug are dimensioned so that the plug will fit into the output port only in one specific orientation." Ex. 1001, 10:20–22.

Petitioner asserts that Lei discloses a jumper cable device having a plug that fits into an output port only in one specific orientation. Pet. 45 (citing Ex. 1008, 7:65–8:35). The assertion is supported by the cited disclosure of Lei. In particular, Lei describes that a red power source clip and a black power source clip are used for connecting to an external battery. Ex. 1008, 7:65–67. Also, Lei describes that the red and black power source clips are connected, at the other end, to the battery pack "through an *anti-reverse connector* connected to the positive and negative electrodes of the battery pack 4." *Id.* at 8:10–14 (emphasis added). Dr. Kirtley testifies that "[t]he insertable anti-reverse connector disclosed by Lei comprises a plug that can fit into the output port only in the correct orientation, not a reversed connection." Ex. 1002 ¶ 131.

Patent Owner does not present contrary arguments with respect to the assertion. We are persuaded that Lei discloses a jumper cable device having a plug that fits into an output port only in one specific orientation.

[7] For claim 23, Patent Owner has not submitted objective evidence of nonobviousness for consideration. *See* PO Resp. 41–46.

Petitioner asserts that one with ordinary skill in the art would have been motivated to incorporate the insertable anti-reverse connector of Lei in Klang's battery charging system "for safety or convenience for the user." Pet. 92. Patent Owner has not presented contrary argument in that regard. We find Petitioner's proposed reasoning is based on rational underpinning.

With respect to claim 23, Patent Owner presents only the same argument it asserts with respect to claim 1, which we already have discussed and rejected above. PO Resp. 55. For the foregoing reasons, Petitioner has proved by a preponderance of the evidence that claim 23 is unpatentable over Klang and Lei.

G. Alleged Anticipation of Claims 1, 7–9, 15, and 17–21 by Richardson

1. Overview of Richardson

Richardson relates to a portable power source to provide supplemental power to start internal combustion and turbine engines. Ex. 1006 ¶ 2. As background, Richardson describes that internal combustion and turbine engines require a power source to start, and that commonly this power source is in the form of a battery. *Id.* ¶ 3. Richardson further describes that if the battery lacks sufficient power to start the engine, a supplemental power source is necessary to jump start the engine, and that, typically, "jumper cables are used to connect the battery of one vehicle to the dead battery of another vehicle needing to be jumped." *Id.* ¶ 4. Richardson discloses an apparatus and method for temporarily delivering supplemental power to the electrical system of a vehicle. *Id.* ¶ 6. A preferred embodiment is a portable supplemental power source, also called a "jump starter," illustrated in Figure 1, which is reproduced below:

EXHIBIT 1014
Petitioner ADC (IPR2024-00671)

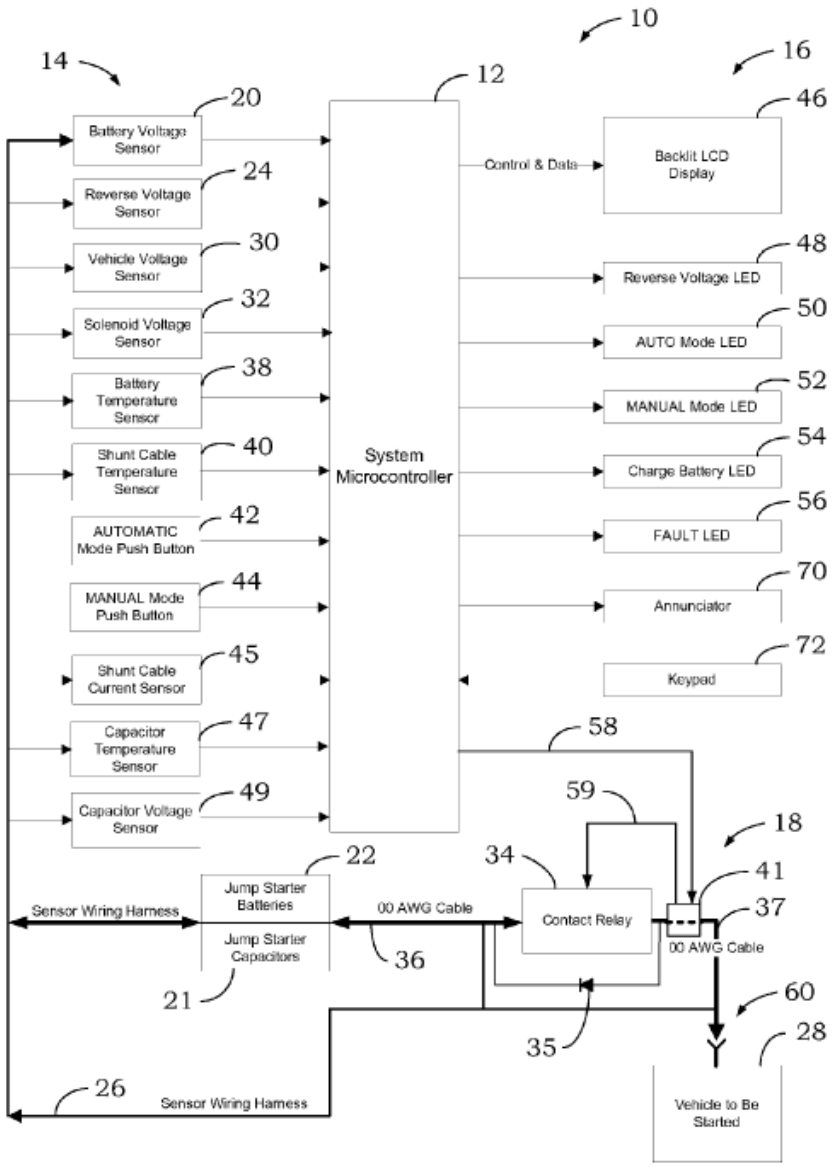

Fig. 1

Figure 1 is a functional block diagram of Richardson's portable jump starter. *Id.* ¶ 8.

Jump starter 10 includes programmable microprocessor 12, which receives input 14 and produces informational outputs 16 and control outputs 18. *Id.* ¶ 14. Control outputs 18 include contact relay control output 58, which operates contact relay 34 through temperature sensor 41. *Id.* ¶ 21.

Shunt cable 36 connects capacitors 21 and batteries 22 to control relay 34. *Id.* ¶ 16. "When the jump starter operation has been successfully initiated, the contact relay 34 is closed and the jump starter capacitors 21 and batteries 22 are connected to the starter system or batteries of the vehicle to be started." *Id.* ¶ 21.

Battery voltage sensor 20 monitors the voltage level of one or more internal batteries 22; reverse voltage sensor 24 monitors the polarity of the jumper cables on line 26; vehicle voltage sensor 30 monitors the voltage on line 37, which reflects the voltage of the vehicle battery. *Id.* ¶ 16. Capacitor voltage sensor monitors the voltage level of one or more capacitors 21. *Id.* ¶ 15. Battery temperature sensor 38 monitors the temperature of the jump starter's batteries 22 to detect overheating due to excess current draw from the batteries during jump starting, and shunt cable temperature sensor 40 monitors the temperature of shunt cable 36 to detect overheating of the cable. *Id.* ¶ 17. Automatic mode push button 42 is provided to set the jump starter in automatic mode of operation, and manual mode push button 44 is provided to set the jump starter in manual mode of operation. *Id.*

LCD display 46 displays user instructions, error messages, and real-time sensor data during operation. *Id.* ¶ 20.

2. Claim 1

At the outset, we eliminate an issue we raised, *sua sponte*, in the Decision on Institution. It relates to limitation "1.g" and we determined that paragraph 27 of Richardson does not support Petitioner's assertion that in Richardson "the power switch for charging the vehicle battery cannot be turned on unless there is a proper polarity connection of the cables." Paper 20, 18 (citing Petition at 26). Paragraph 27 of Richardson indicates that if a

EXHIBIT 1014
Petitioner ADC (IPR2024-00671)

battery is not already charging, then it is determined whether the vehicle battery is reverse connected. Ex. 1006 ¶ 27. We read that "battery" as the vehicle battery, because, logically, if the battery is not charging when it is supposed to be charging then it may be because it was reverse connected. Decision on Institution 18–19. After institution of review, however, both Petitioner and Patent Owner agree that that "battery" in paragraph 27 of Richardson does not refer to the vehicle battery, but to the internal batteries of the charger itself. Tr. 63:17–64:8. Thus, paragraph 27 of Richardson is not inconsistent with Petitioner's contentions regarding how Richardson meets limitation "1.g." The matter is no longer an issue for discussion and resolution.

Claim 1 begins with this recitation: "Apparatus for jump starting a vehicle engine." Ex. 1001, 8:4. Petitioner asserts that Richardson discloses an apparatus for jump starting a vehicle engine, citing paragraphs 2 and 7 of Richardson. Pet. 13. Richardson states: "The present invention relates to a portable power source for a motor vehicle and, more particularly, to a method and apparatus to provide supplemental power to start internal combustion and turbine engines." Ex. 1006 ¶ 2. Richardson further states: "The system includes one or more internal batteries and capacitors to provide the power to the battery of the vehicle to be jump started." *Id.* ¶ 7. Patent Owner has not presented a contrary argument. We are persuaded that Richardson discloses an apparatus for jump starting a vehicle engine.

Claim 1 recites "an internal power supply." Ex. 1001, 8:6. Petitioner asserts that Richardson's Figure 1 identifies Jump Starter Batteries 22 as the internal power supply of the charging apparatus. Pet. 13. Also, Richardson states: "The system includes one or more internal batteries and capacitors to

provide the power to the battery of the vehicle to be jump started." Ex. 1006 ¶ 7 (cited at Pet. 13). Further, Richardson states: "A battery voltage sensor 20 monitors the voltage level of one or more jump starter batteries 22." *Id.* ¶ 16 (cited at Pet. 13). Patent Owner does not dispute Petitioner's assertion that Richardson's charging apparatus includes an internal power supply. We are persuaded by Petitioner that Richardson's charging apparatus includes an internal power supply.

Claim 1 recites "an output port having positive and negative polarity outputs." Ex. 1001, 8:7–8. Petitioner explains that Richardson discloses conductive leads connected to jumper cables having positive and negative polarity outputs through which power from the internal power supply is transmitted. Pet. 14 (citing Ex. 1006, Abstr., Claim 1). Patent Owner does not dispute Petitioner's assertion that Richardson discloses "an output port having positive and negative polarity outputs." We are persuaded by Petitioner that Richardson's charging apparatus includes "an output port having positive and negative polarity outputs."

Claim 1 recites "a vehicle battery isolation sensor connected in circuit with said positive and negative polarity outputs, configured to detect presence of a vehicle battery connected between said positive and negative polarity outputs." Ex. 1001, 8:9–12.

Petitioner asserts:

> Richardson discloses a "vehicle voltage sensor 30 monitors the voltage on line 37 (voltage of the vehicle)." Ex. 1006, ¶ 0016. Shown in FIG. 2C of Richardson below, the line 37 is connected in series with said positive and negative polarity outputs, such that the vehicle voltage sensor can detect presence of a vehicle battery connected between said positive and negative polarity outputs. Ex. 1002, ¶ 65.

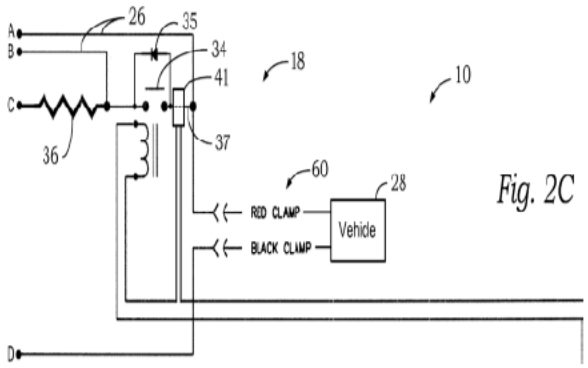

Ex. 1006, FIG. 2C

Pet. 17. Figure 2C of Richardson is a partial schematic diagram of Richardson's supplemental power charging apparatus for an engine. Ex. 1006 ¶ 9. Petitioner further refers to Figure 1 of Richardson which shows vehicle voltage sensor 30 as a separate sensor from reverse voltage sensor 24. Pet. 17–18.

Petitioner's position is that the sensor's detecting a voltage indicates the presence of a vehicle battery, and the sensor's not detecting a voltage indicates absence of a battery. Petitioner states: "The process of sensing the voltage of the vehicle battery by the vehicle voltage sensor 30 necessarily involves detecting the presence or absence of the vehicle battery since a reading of zero volts would indicate the absence of a battery." Pet. 30.

The parties' expert witnesses, Dr. Kirtley for Petitioner and Dr. Wood for Patent Owner, agree that for a 12 volt vehicle battery, Richardson's vehicle battery sensor 30 outputs approximately 0.7 volts to the microcontroller when the battery is present, and approximately 0.032 volts to the microcontroller when the battery is not present. Ex. 1050 ¶¶ 113, 156–71; Ex. 1017, 120:6–15. Although 0.032 volts is not precisely zero as Petitioner contends in the Petition, the point made is the same, i.e., detecting almost zero voltage indicates absence of a battery.

Petitioner's counsel confirmed, at oral hearing, that it is Petitioner's position that an output of approximately 0.032 volts indicates absence of a vehicle battery, and an output of approximately 0.7 volts indicates presence of a vehicle battery. Tr. 28:15–26. Patent Owner has not presented a contrary argument to refute this assertion which is supported by the testimony of both Dr. Kirtley and Dr. Wood.

We determine Petitioner has shown that Richardson's vehicle voltage sensor 30 is "a vehicle battery isolation sensor connected in circuit with said positive and negative polarity outputs, configured to detect presence of a vehicle battery connected between said positive and negative polarity outputs" as recited in claim 1.

Claim 1 recites "a reverse polarity sensor connected in circuit with said positive and negative polarity outputs, configured to detect polarity of a vehicle battery connected between said positive and negative polarity outputs and to provide an output signal indicating whether positive and negative terminals of said vehicle battery are properly connected with said positive and negative outputs of said output port." *Id.* at 8:13–20.

Petitioner notes that Richardson's Figure 1 illustrates reverse polarity sensor 24 which is separate from vehicle voltage sensor. Pet. 18–19. Petitioner explains:

> Richardson states the "reverse voltage sensor 24 monitors the polarity of the jumper cables on line 26 which are connected to the vehicle's electrical system 28." Ex. 1006, ¶ 0016. "A reverse voltage LED 48 is illuminated when the microprocessor 12 determines that a reverse voltage jumper cable voltage is detected by reverse voltage sensor 24." Ex. 1006, ¶ 0020. "If the system does not detect a battery charging voltage 212, once jumper cables 60 have been manually connected to the vehicle to be started 28, the voltage is measured by the reverse voltage

EXHIBIT 1014
Petitioner ADC (IPR2024-00671)

> sensor 24 to determine if the cables have been properly connected to the vehicle 214. If the voltage measured is significantly less than the voltage of the jump starter capacitors 21 and batteries 22, then a reverse polarity connection of the jumper cables to the vehicle is determined and an error flag is set and the event saved in non-volatile memory 216. A "Reverse Polarity" error message is displayed 218 on the LCD 46, and the reverse voltage LED 48 is illuminated 216." Richardson Ex. 1006, ¶ 0027.

Pet. 20. Petitioner's assertions are supported by the cited evidence. Patent Owner does not present contrary arguments in this regard.

We determine Petitioner has shown that Richardson's reverse voltage sensor 24 is "a reverse polarity sensor connected in circuit with said positive and negative polarity outputs, configured to detect polarity of a vehicle battery connected between said positive and negative polarity outputs and to provide an output signal indicating whether positive and negative terminals of said vehicle battery are properly connected with said positive and negative outputs of said output port."

Claim 1 recites "a power switch connected between said internal power supply and said output port." Ex. 1001, 8:21–22. Petitioner asserts that Richardson discloses a power switch connected between the batteries 22 as internal power supply and the leads which serve as output port. Pet. 20. Petitioner identifies Richardson's contact relay 34 in Figure 1, connected between jump starter batteries 22 and the leads serving as output port as the power switch. *Id.* at 20–21. Petitioner further quotes the following text from Richardson:

> When the jump starter operation has been successfully initiated, the contact relay 34 is closed and the jump starter capacitors 21 and batteries 22 are connected to the starter system or batteries of the vehicle to be started 28. The contact relay 34

> is opened when a successful starter cycle has been completed, a start fault has occurred or the operator interrupts the jump starter cycle." Ex. 1006, ¶ 0021.

Pet. 22. Petitioner's assertions are supported by the cited evidence. Patent Owner does not submit contrary arguments in this regard. We determine Petitioner has shown that Richardson's contact relay 34 is "a power switch connected between said internal power supply and said output port."

Claim 1 further recites: "a microcontroller configured to receive input signals from said vehicle isolation sensor and said reverse polarity sensor, and to provide an output signal to said power switch." Ex. 1001, 8:23–26.

Petitioner identifies Richardson's system microcontroller 12, shown in Figure 1, as the claimed microcontroller, which receives inputs 14 and provides informational outputs 16 and control outputs 18. Pet. 23 (citing Ex. 1006 ¶ 15, Fig. 1). Petitioner further states: "Richardson's FIG. 1 shows distinct input signals received by the microcontroller 12 from the vehicle voltage sensor 30 and the reverse voltage sensor 24 . . . ." *Id.* at 24–25. Also referring to Figure 1, Petitioner asserts that microprocessor 12 provides control signal to contact relay 34. *Id.* at 23. We understand Petitioner to be referring to lines 58 and 59 in Figure 1. In that regard, Richardson states:

> The temperature of 00 AWG shunt cable 37 may also be monitored by a temperature sensor or thermal switch 41. As long as the temperature of the cable 37 is below a predetermined limit, the input on line 58 is passed through sensor 41 to line 59 to enable the contact relay 34 as controlled by system controller 12.

Ex. 1006 ¶ 18.

Petitioner's assertions are supported by the cited evidence. Patent Owner does not present contrary arguments in that regard. We are

persuaded by Petitioner that Richardson discloses "a microcontroller configured to receive input signals from said vehicle isolation sensor and said reverse polarity sensor, and to provide an output signal to said power switch."

Claim 1 further recites the following limitation "1.g" regarding the claimed microcontroller:

> such that said power switch is turned on to cause said internal power supply to be connected to said output port in response to signals from said sensors indicating the presence of a vehicle battery at said output port and proper polarity connection of positive and negative terminals of said vehicle battery with said positive and negative polarity outputs, and is not turned on when signals from said sensors indicate either the absence of a vehicle battery at said output port or improper polarity connection of positive and negative terminals of said vehicle battery with said positive and negative polarity outputs.

Ex. 1001, 8:26–37.

The limitation refers to the action of the claimed microcontroller, which receives input signals from the vehicle isolation sensor and the reverse polarity sensor and provides an output signal to the power switch. Ex. 1001, 8:23–25. According to this limitation, the power switch can be turned on in response to affirmative indication of both (1) a signal indicating presence of a vehicle battery, and (2) a signal indicating proper polarity connection to that vehicle battery. If either signal is negative, however, the power switch cannot be turned on. The parties' arguments are consistent with this understanding. Neither party argues anything different.

With regard to the first condition, Petitioner explains:

> Richardson discloses that the starter voltage of the jump starter apparatus can be configured by the operator "for 12, 18, 24, 30, 36, 42 or 48 volts, for example." Ex. 1006, ¶ 0034.

> Richardson discloses a vehicle voltage sensor 30 that "monitors the voltage on line 37 (voltage of the vehicle)" for detecting the voltage of the vehicle to be started. Ex. 1006, ¶ 0016. "If one of the push buttons 42 or 44 has been selected, the system will compare the operator-configured starter voltage against the voltage of the vehicle to be started 28. . . . If the difference between the voltage selected and the voltage measured is not within a predetermined range and tolerance 252, a "Wrong Selector Volts" message is displayed 254 on the LCD 46 and further operation is prohibited until the correct voltage is selected 256 at which point processing returns to the main processing loop 210." Ex. 1006, ¶ 0034. In other words, Richardson discloses that if a vehicle battery with a particular voltage that matches an operator-configured starter voltage is not detected by the vehicle voltage sensor 30, then the charging process cannot occur.

Pet. 29–30. Petitioner's position is that a reading of zero volts or 0.032 millivolts, indicative of the absence of a vehicle battery, would lead to a Wrong Selector Type determination and prevent closing of the power switch.

With regard to the second condition, Petitioner refers to paragraph 27 of Richardson which reads as follows:

> If the system does not detect a battery charging voltage 212, once jumper cables 60 have been manually connected to the vehicle to be started 28, the voltage is measured by the reverse voltage sensor 24 to determine if the cables have been properly connected to the vehicle 214. If the voltage measured is significantly less than the voltage of the jump starter capacitors 21 and batteries 22, then a reverse polarity connection of the jumper cables to the vehicles is determined and an error flag is set and the event saved in non-volatile memory 216. A "Reverse Polarity" error message is displayed 218 on the LCD 46, and the reverse voltage LED 48 is illuminated 216. Any further jump starter action by the operator is ignored until the reverse polarity condition is corrected 220, at which point processing returns to the start of the main processing loop 210.

Ex. 1006 ¶ 27 (cited at Pet. 26–27). According to this description, the power switch (contact relay 34) cannot be closed to cause charging of the vehicle battery unless the vehicle battery is properly connected in polarity.

Dr. Kirtley, Petitioner's expert, testifies:

> Richardson discloses in FIGS. 3–8 "flow charts of the processing steps of the portable power source of the present invention." Ex. 1006, ¶ 0010. This sequence of processing steps involves several checks performed by the microcontroller before turning on the power switch to jump start the vehicle. As discussed below, these checks include detecting (1) the presence of a vehicle battery at said output port and (2) proper polarity connection of positive and negative terminals of said vehicle battery with said positive and negative polarity outputs.

Ex. 1002 ¶ 76 (cited at Pet. 26). Dr. Kirtley further testifies:

> Thus, Richardson discloses that the power switch is turned on to cause the internal power supply to be connected to the output port in response to distinct signals from the sensors indicating (1) the presence of a vehicle battery at said output port and (2) proper polarity connection of positive and negative terminals of said vehicle battery with said positive and negative polarity outputs. Richardson also discloses that the power switch is not turned on when signals from said sensors indicate either the absence of a vehicle battery at said output port or improper polarity connection of positive and negative terminals of said vehicle battery with said positive and negative polarity outputs.

Id. ¶ 81.

For ease of referencing when, according to Petitioner, Richardson's contact relay 34 is closed, we reproduce below Richardson's Figure 6:

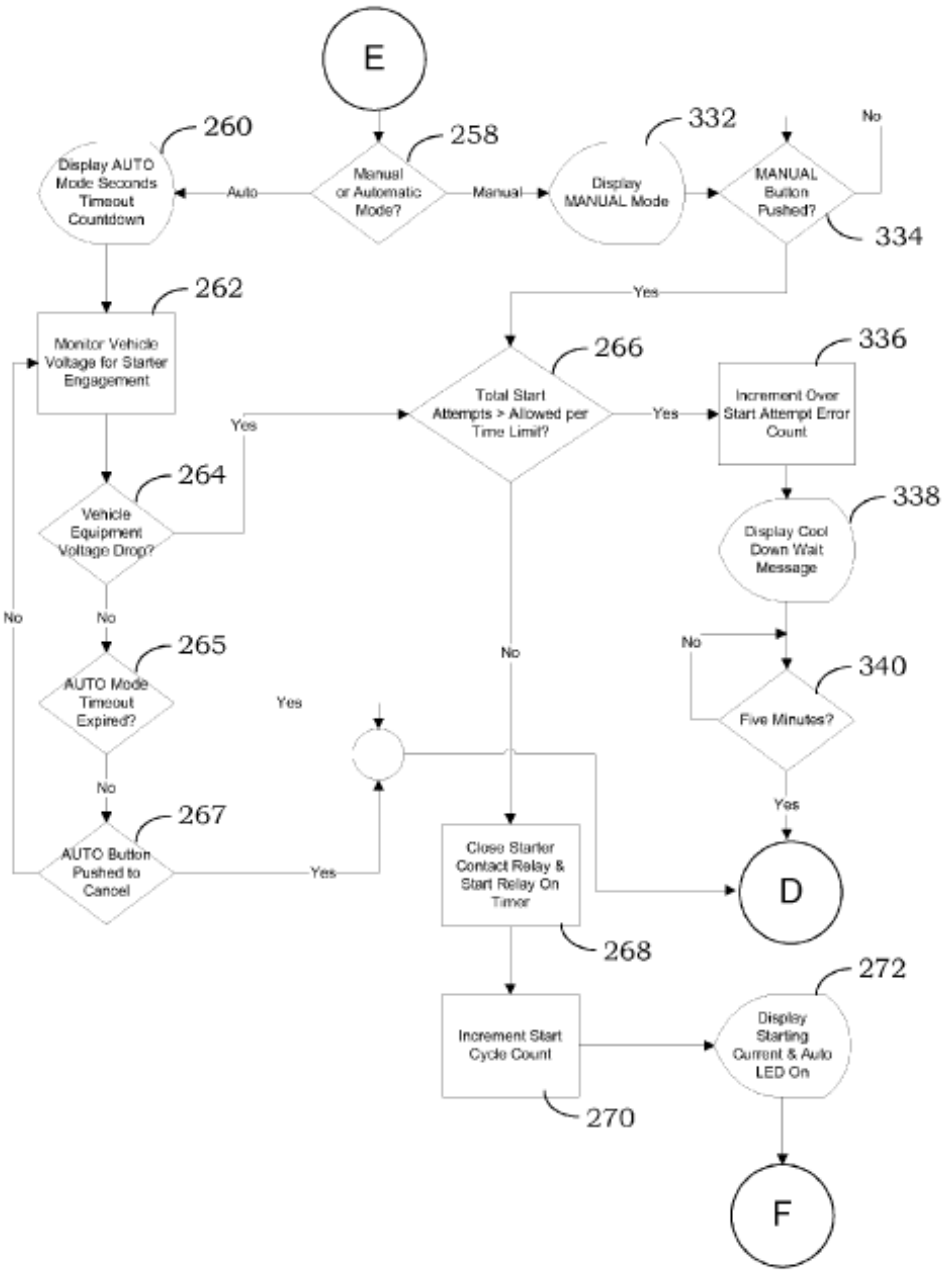

Fig. 6

Figure 6 is a partial flow chart of the processing steps of Richardson's device. Ex. 1006 ¶ 10. In particular, at Step 268, the Starter Contact Relay corresponding to the power switch of claim 1 of the '015 patent is closed. *Id.* at Fig. 6.

Notwithstanding Patent Owner's arguments to the contrary, discussed below, we are persuaded by Petitioner that Richardson discloses limitation "1.g." In particular, we note that Richardson's device "may be configured for 12, 18, 24, 30, 36, 42, or 48 volts." Ex. 1006 ¶ 34. Thus, it can distinguish batteries which are six volts different from each other, for determining a Wrong Selector Type condition where the detected voltage does not match the preset configuration of the charging device. That gives support to Petitioner's assertion that where the device is configured for a 12 volt battery, a detected voltage or zero or 0.032 volts will yield a Wrong Selector Type condition which precludes further action in the charging process.

At the outset, we note that in the Decision on Institution, we stated that Richardson's microprocessor does not compare the detected voltage to zero and makes no determination that the detected voltage equals zero, and that, rather, the determination is made on whether the difference between the detected voltage and the battery type as set by the operator is within a predetermined range. Decision on Institution 23. We further stated that in Richardson there is no awareness by the microprocessor of whether a battery is connected, and that if a battery is not connected, Richardson would conclude that the operator has selected the wrong battery type setting and cause an alert message to be displayed to the operator. *Id.* (citing Ex. 1006 ¶ 34).

Those observations about Richardson remain true but do not undermine Petitioner's accounting for limitation "1.g." We did not, in the Decision on Institution, construe claim 1 or any other claim as requiring express awareness or acknowledgment by the microprocessor that a vehicle

battery is connected. Claim 1 requires only that a signal indicating presence or absence of a vehicle battery and a signal indicating whether a vehicle battery is properly connected in polarity are sent to the microprocessor, and that the microprocessor in response to both signals being affirmative would close the power switch and in response to one or both signals being negative, would not close the power switch. These conditions are met by Richardson, as explained by Petitioner, noted above.

Patent Owner argues:

> To the contrary, Richardson discloses that the power switch may be closed without regard to either (1) the presence or absence of the vehicle battery, or (2) the proper or improper polarity connection of a vehicle battery. More specifically, Richardson discloses that the microcontroller is configured to close the contact relay if a shunt calibration flag is set, and that this occurs prior to any check for the vehicle battery presence or polarity. Richardson, Ex. 1006, at [0024]. As such, Richardson does not disclose a microcontroller configured "such that said power switch . . . is not turned on when signals from said sensors indicate either the absence of a vehicle battery at said output port or improper polarity connection . . ." as recited in claim 1. (Wood Decl. ¶ 76.)

PO Resp. 27. Patent Owner refers to Figures 3 through 6 of Richardson in support of the above-quoted argument. *Id.* Figure 3 of Richardson is reproduced below:

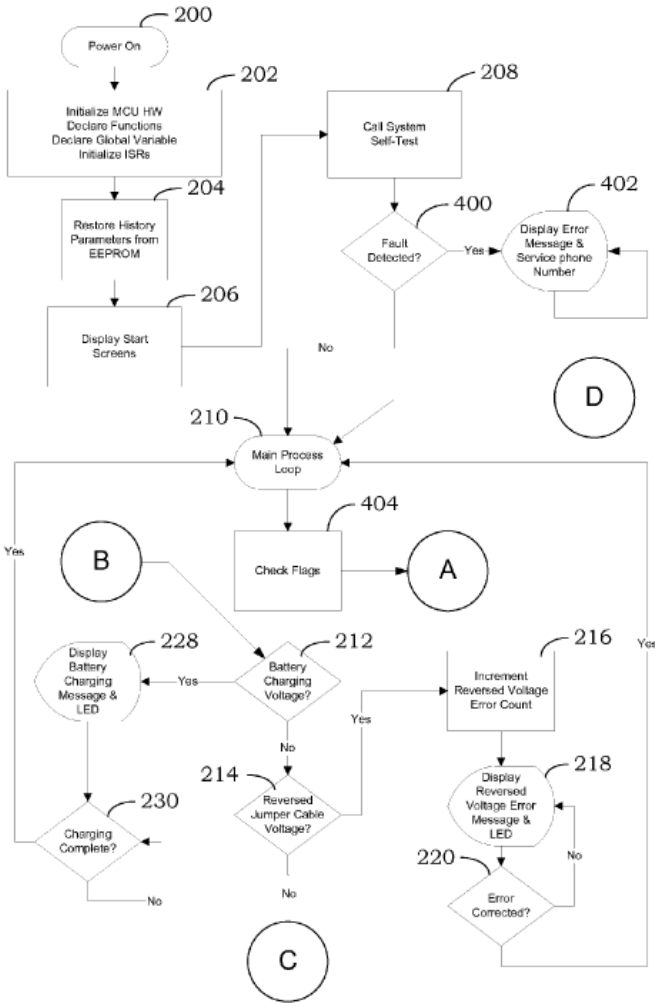

Fig. 3

Figure 3 is a partial flow chart of the processing steps of Richardson's device. Ex. 1006 ¶ 10. It includes main processing loop 210. The first step is to check flags at 404, and leads to Point A, continued in Figure 4, reproduced below:

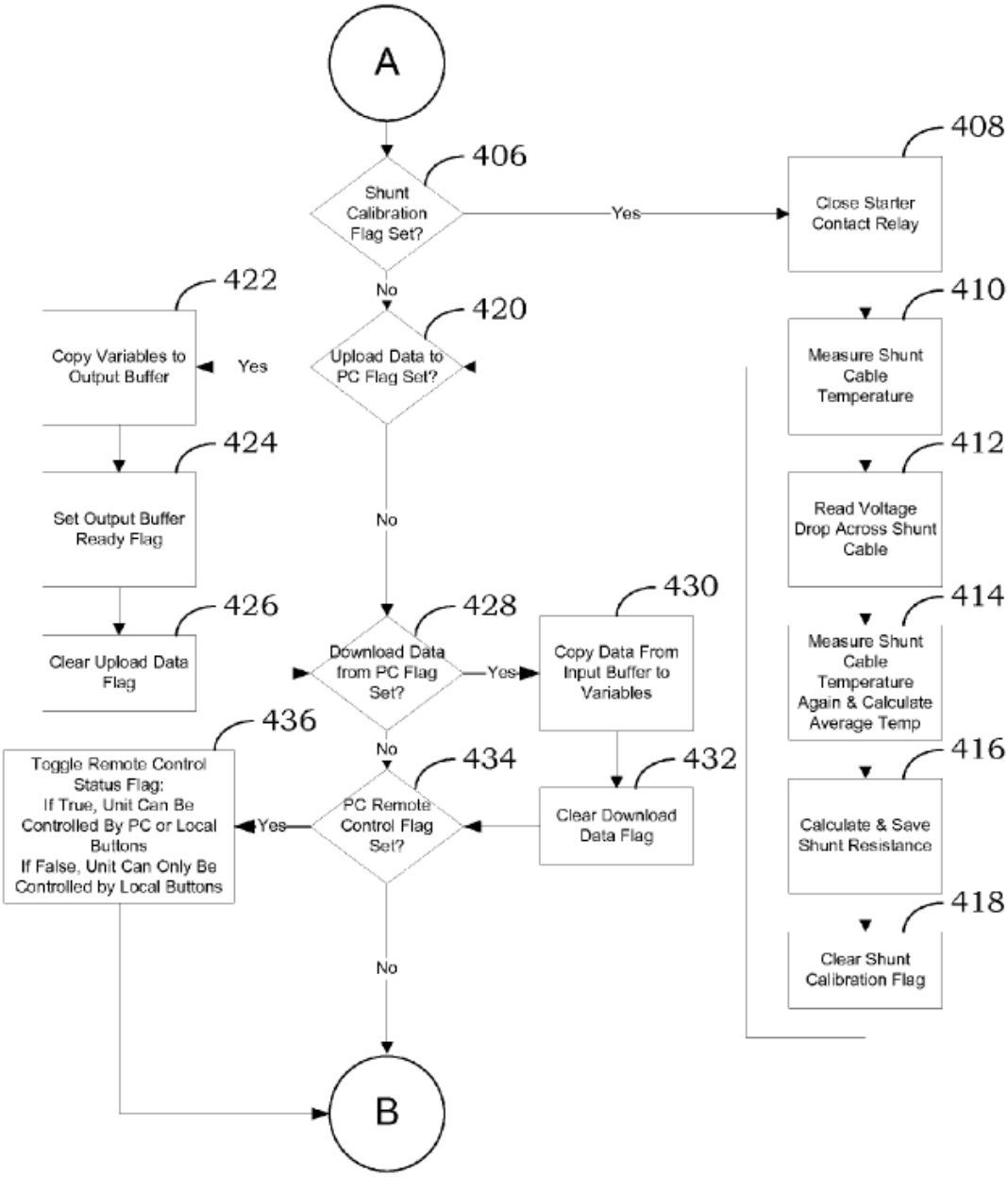

Fig. 4

Figure 4 is a partial flow chart of the processing steps of Richardson's device. Ex. 1006 ¶ 10. It shows that only a single question is asked at 406, i.e., whether the shunt calibration flag is set, before closing the starter contact relay at 408, if the answer is affirmative, thus turning on the power

switch. Thereafter, further steps are taken leading to Point B which leads back to Figure 3.

Patent Owner asserts:

> After closing the contact relay at step 408, the Richardson system continues through the calibration process steps in FIG. 4, and returns to its main process loop in FIG. 3. The system then checks whether the batteries of the Richardson system are being charged at step 212 (Battery Charging Voltage?). Only after these steps are complete does Richardson finally perform a polarity check at step 214 (Reversed Jumper Cable Voltage?).

PO Resp. 28. In summary, Patent Owner states: "The Richardson microcontroller does not consider either a signal from the vehicle battery isolation sensor or a signal from a reverse polarity sensor prior to closing the contact relay at step 408." *Id.*

Patent Owner's contentions are misplaced. Although it is true that in one circumstance, i.e., when the shunt calibration flag is set, Richardson's microprocessor will close contact relay 34 without making any check on the output of vehicle voltage sensor 30 and reverse voltage sensor 24, Richardson does not describe that the shunt calibration flag is always set. Thus, it is only in one particular mode of operation, i.e., when the shunt calibration flag is set, that the operation of Richardson's device does not meet the claim requirement. Patent Owner does not dispute that in a mode of operation represented by the shunt calibration flag not set, contact relay 34 is not closed unless a signal is received by the microprocessor from a sensor indicating presence of a vehicle battery and a signal is received by the microprocessor from a sensor indicating the vehicle battery is not reverse connected. Richardson does not have to meet the claim in all of

Richardson's modes of operation. Meeting the claim in one mode of operation is sufficient for anticipation.

Regarding shunt calibration, Richardson describes:

> The temperature of the shunt cable is measured 410 and the voltage drop across the shunt cable is read 412. The temperature of the shunt cable is measured a second time and averaged with the previous reading 414. The shunt resistance is then calculated and saved 416 and the shunt calibration flag is cleared.

Ex. 1006 ¶ 24. Richardson states: "The shunt cable 36 is a precisely measured and calibrated 00 AWG wire, the temperature of which is monitored 40 and used to calculate the resistance across the length of the cable." *Id.* ¶ 43. Shunt cable 36 is shown in Figure 1 connecting jump starter batteries 22 to contact relay 34. *Id.* at Fig. 1. Notably, Richardson describes that after each calibration, the shunt calibration flag is cleared, and does not describe that the shunt calibration flag is set for each and every use of the charging apparatus.

Petitioner asserts that the calibration procedure is only optional. Reply 5. We understand Petitioner's position to be that the calibration procedure is only performed sometimes, when the shunt calibration flag is set, but not in times when the shunt calibration flag is not set. We agree. In that regard, Patent Owner's expert, Dr. Wood, agrees that Richardson contemplates a flow of control where the shunt calibration flag is not set:

> Q. So Richardson contemplates a flow of control where the shunt calibration flag was not set, correct?
>
> A. That is reasonable. He shows an option -- an option of a "no" result from Step 406.

Ex. 1047, 110:14–18. Dr. Wood also agrees that when the shunt calibration flag is not set and the procedure advances to Step 420, the contact relay in Richardson is still open:

> Q. Now, if the shunt calibration flag is not set and we go to Step 420, the starter contact relay in Richardson is still open, correct?
>
> A. That is my understanding.

Id. at 77:10–13. Dr. Wood further agrees that when the shunt calibration flag is not set and the procedure advances to Step 214, where reverse polarity connection is tested, the starter contact relay is still open:

> Q. Okay. Then if we continue to Step 214 in this example, where the shunt calibration flag was not set, when we're testing for the condition reverse jumper cable voltage, the starter contact relay is still open, right?
>
> A. That appears to be the case.

Id. at 78:23–79:3. Dr. Wood still further agrees that when the shunt calibration flag is not set, at Step 266 contact relay 34 is still open and Step 268 closes the contact relay:

> Q. Okay. But in -- so let me ask the question again.
>
> In the situation where the shunt calibration flag was not set in Step 266, the starter contact relay is still open, and then it is closed when control goes from -- passes from 266 and goes to 268, correct?
>
> A. Well, that's -- I agree with that with the caveat of my previous answer, in which I've stated the conditions under which Step 268 takes place. I don't need to repeat my previous answer.

Id. at 83:22–84:6.

For the foregoing reasons, the fact that Richardson discloses a separate mode of operation when the shunt calibration flag is set,

during which contact relay 34 is immediately closed without checking if a vehicle battery is connected or if a vehicle battery is connected in reverse polarity, does not defeat or undermine Petitioner's reliance on a mode of operation that corresponds to non-setting of the shunt calibration flag.

For the foregoing reasons, Petitioner has proved by a preponderance of the evidence that claim 1 is anticipated by Richardson.

3. Claims 7–9, 15, 17–21

Claim 7 depends from claim 1 and further recites: "further comprising a temperature sensor configured to detect temperature of said internal power supply and to provide a temperature signal to said microcontroller." Ex. 1001, 8:53–56. Petitioner identifies Richardson's battery temperature sensor 38 as such a sensor. Pet. 31–32 (citing Ex. 1006 ¶ 17, Fig. 1). Patent Owner does not present any argument additional to that it presents with respect to claim 1, which we already have discussed and rejected above in the context of claim 1. We are persuaded that Richardson discloses this additional limitation of claim 7.

Petitioner has proved by a preponderance of the evidence that claim 7 is anticipated by Richardson.

Claim 8 depends from claim 1 and further recites: "further comprising a voltage measurement circuit configured to measure output voltage of said internal power supply and to provide a voltage measurement signal to said microcontroller." Ex. 1001, 8:57–60. Petitioner identifies Richardson's battery voltage sensor 20 as such a voltage measurement circuit. Pet. 32–33 (citing Ex. 1006 ¶ 16, Fig. 1). Patent Owner does not present any argument additional to that it presents with respect to claim 1,

which we already have discussed and rejected above in the context of claim 1. We are persuaded that Richardson discloses this additional limitation of claim 8.

Petitioner has proved by a preponderance of the evidence that claim 8 is anticipated by Richardson.

Claim 9 depends from claim 1 and further recites: "further comprising a voltage regulator configured to convert output voltage of said internal power supply to a voltage level appropriate to provide operating power to internal components of the apparatus." Ex. 1001, 8:61–64. Petitioner identifies component "LM7805" in Richardson's Figure 2A as such a voltage regulator providing power to the internal components of the charging apparatus. Pet. 34 (citing Ex. 1001, Fig. 2A; Ex. 1002 ¶ 91). Patent Owner does not present any argument additional to that it presents with respect to claim 1, which we already have discussed and rejected above in the context of claim 1. We are persuaded that Richardson discloses this additional limitation of claim 9.

Petitioner has proved by a preponderance of the evidence that claim 9 is anticipated by Richardson.

Claim 15 depends from claim 1 and further recites: "further comprising a plurality of visual indicators configured to display remaining capacity status of said internal power supply." Ex. 1001, 9:11–13. Petitioner identifies Richardson's LED 54 and LCD 46 as visual indicators which display remaining capacity status of the internal power supply. Pet. 36. In that regard, Richardson states:

> If the voltage level of the system batteries 22 measured by the voltage sensor 30 is equal to a state of charge of eighty percent or more below a fully charged voltage level 222, an error flag is

> set and the event recorded in memory 224. The charge battery LED 54 is illuminated and the LCD 46 displays a "Charge Battery" message 225.

Ex. 1006 ¶ 28 (cited at Pet. 36). Petitioner's assertion is supported by the cited evidence.

Patent Owner does not present any argument additional to that it presents with respect to claim 1, which we already have discussed and rejected above in the context of claim 1. We are persuaded that Richardson discloses this additional limitation of claim 15.

Petitioner has proved by a preponderance of the evidence that claim 15 is anticipated by Richardson.

Claim 17 depends from claim 1 and further recites: "further comprising a visual indicator configured to warn a user when a vehicle battery is connected with reverse polarity." Ex. 1001, 9:17–19. Petitioner identifies in Richardson a "Reverse Polarity" error message displayed on LCD 46 and the illumination of reverse voltage LED 48 as such a visual indicator. Pet. 37 (citing Ex. 1006 ¶ 27). Petitioner's assertion is supported by the cited evidence.

Patent Owner does not present any argument additional to that it presents with respect to claim 1, which we already have discussed and rejected above in the context of claim 1. We are persuaded that Richardson discloses this additional limitation of claim 17.

Petitioner has proved by a preponderance of the evidence that claim 17 is anticipated by Richardson.

Claim 18 depends from claim 1, and further recites: "further comprising separate visual indicators configured to display the power on status of the apparatus, and the jump start boost power status of power

supplied to said output port." Ex. 1001, 9:20–23. Petitioner identifies Richardson's LCD 46 as a visual indicator showing the power on status of the jump starter, and Richardson's LED 54 as a separate visual indicator displaying the jump start boost power status of power supplied to the output port. Pet. 37–38 (citing Ex. 1006 ¶¶ 20, 22). The assertions are supported by the cited evidence.

Patent Owner does not present any argument additional to that it presents with respect to claim 1, which we already have discussed and rejected above in the context of claim 1. We are persuaded that Richardson discloses this additional limitation of claim 18.

Petitioner has proved by a preponderance of the evidence that claim 18 is anticipated by Richardson.

Claim 19 depends from claim 1, and further recites: "further comprising a manual override switch configured to activate a manual override mode to enable a user to connect jump start power to said output port when said vehicle battery isolation sensor is unable to detect presence of a vehicle battery." Ex. 1001, 10:1–5. Petitioner explains:

> Richardson discloses a manual override mode that can be used if the presence of the vehicle battery cannot be detected. "The unit 10 also includes automatic 42 and manual 44 pushbutton inputs to accept user input to select either automatic or manual operation." Ex. 1006, ¶ 0017. "If in manual mode, the jump starter 10 may be used when the battery voltage of the vehicle is below 10 volts, or if the vehicle's battery is not connected." Ex. 1006, ¶ 0049.

Pet. 39. The assertions are supported by the cited evidence. It also is true that if vehicle battery is not connected, no sensor is able to detect the presence of a vehicle battery.

Patent Owner does not present any argument additional to that it presents with respect to claim 1, which we already have discussed and rejected above in the context of claim 1. We are persuaded that Richardson discloses the additional limitation of claim 19.

Petitioner has proved by a preponderance of the evidence that claim 19 is anticipated by Richardson.

Claim 20 depends from claim 19, and further recites: "wherein said microcontroller is configured to detect actuation of said manual override switch for at least a predetermined period of time before activation of said manual override mode." Ex. 1001, 10:6–9. Petitioner explains:

> [I]f manual mode is selected 258, "Manual" is displayed 332 on the LCD 46, the system will prompt the operator to press the manual button again. If the manual button 44 is pressed a second time 334, then the system checks the number of start attempts 266. If the maximum number of start attempts has been exceeded, an over start attempt error count is incremented 336, a "Cool Down Unit" message is displayed 338 on the LCD 46, and the system waits for five minutes for the system to cool 340. Once the cool down time has expired, processing returns to the main processing loop 210. If the total start attempts have not exceeded the limit 266, the processing continues at block 268 as described above." Ex. 1006, ¶ 0047.

Pet. 39. The assertion is supported by the cited evidence.

Patent Owner does not present any argument additional to that it presents with respect to claim 1, which we already have discussed and rejected above in the context of claim 1. We are persuaded that Richardson discloses the additional limitation of claim 20.

Petitioner has proved by a preponderance of the evidence that claim 20 is anticipated by Richardson.

Claim 21 depends from claim 1, and further recites: "further comprising a jumper cable device including a plug configured to plug into said output port, a pair of cables integrated with the plug at one respective end thereof and being configured to be connected to terminals of a battery at another respective end thereof." Ex. 1001, 10:10–14.

Petitioner identifies Richardson's jumper cables 60 shown in Figure 2C of Richardson, including red and black clamps connected to vehicle 28, as such a jumper cable device. Pet. 40. Petitioner further asserts that Figure 2C "shows electrical symbols depicting a plug/socket connection of the jumper cables 60 to the output port." *Id.* The assertions are supported by Figure 2C of Richardson, reproduced below:

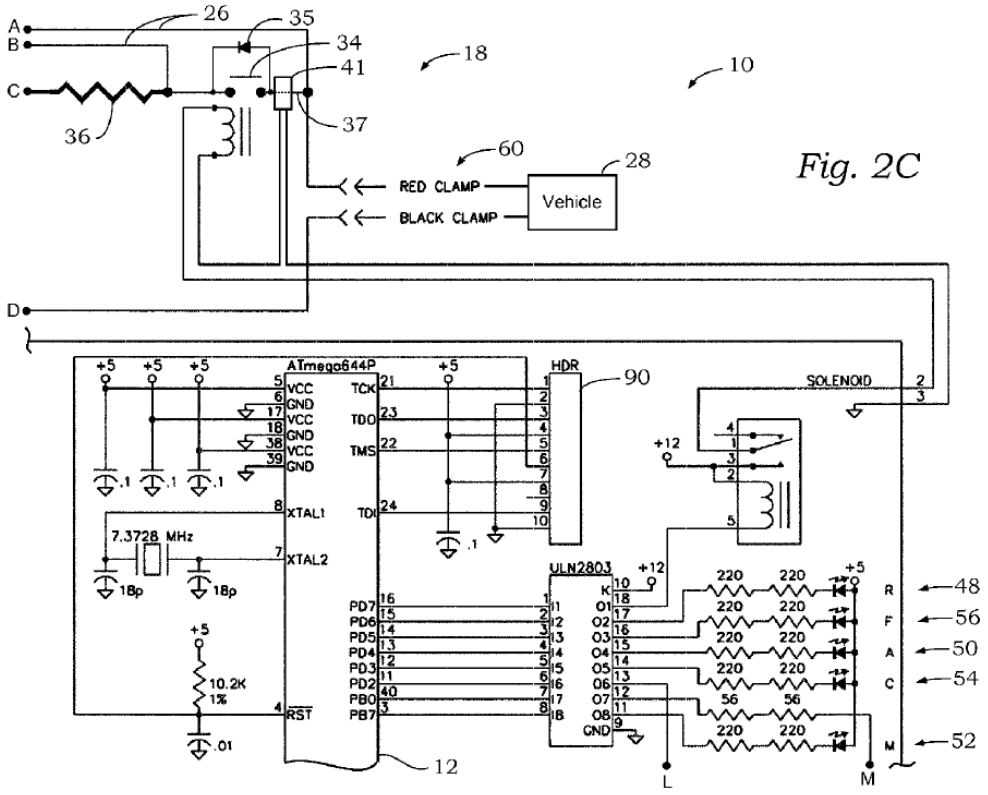

Figure 2C is a partial schematic of Richardson's portable power source, control circuit, and sensors. Ex. 1006 ¶ 9.

Patent Owner does not present any argument additional to that it presents with respect to claim 1, which we already have discussed and rejected above in the context of claim 1. We are persuaded that Richardson discloses this additional limitation of claim 21.

Petitioner has proved by a preponderance of the evidence that claim 21 is anticipated by Richardson.

H. Alleged Obviousness of Claims 2, 3, 12–14, and 23 over Richardson and Lei[8]

Claim 2 depends from claim 1 and further recites: "wherein said internal power supply comprises a lithium ion battery." Ex. 1001, 8:38–39. Claim 3 depends from claim 2 and further recites: "wherein said internal power supply comprises a battery pack of multiple lithium ion batteries." *Id.* at 8:40–42.

Lei discloses an emergency power source that outputs a high current for starting a vehicle. Ex. 1008, 2:7–9. The emergency power source includes a battery pack. *Id.* at 2:13–14. Output terminals of the battery pack are connected to a high current outputting circuit for outputting a high current used for starting a vehicle. *Id.* at 2:17–20. An external smart battery detection system is connected between the battery pack and the high current outputting circuit. *Id.* at 2:23–25. Lei further states: "emergency power source uses lithium-ion batteries as its battery pack." *Id.* at 6:50–51. Lei additionally states: "In certain embodiments, the battery pack consists of lithium-ion batteries connected in series or parallel." *Id.* at 2:22–3.

[8] For these claims, Patent Owner has not submitted objective evidence for consideration. *See* PO Resp. 41–46.

Petitioner asserts:

> A POSITA would have been particularly motivated to use lithium-ion batteries because Lei discloses several specific benefits of using lithium-ion batteries in jump starter devices: "The emergency power source uses lithium-ion batteries as its battery pack, which has the characteristics of light weight, small size, durability, high instantaneous discharge current and rechargeability, which is capable of supplying a high current for starting a vehicle." Ex. 1008, 5:15–21. This teaching would have provided motivation to a POSITA to use lithium-ion batteries in Richardson. Ex. 1002, ¶ 120.

Pet. 42. The assertions are supported by the cited evidence, and the reasoning has rational underpinning.

Patent Owner does not present any argument additional to that it presents with respect to claim 1, which we already have discussed and rejected above in the context of claim 1. We are persuaded that the proposed combination of Richardson and Lei is proper and teaches the additional limitations of claims 2 and 3.

Petitioner has proved by a preponderance of the evidence that claims 2 and 3 are unpatentable over Richardson and Lei.

Claim 12 depends from claim 1 and further recites: "further comprising a flash-light circuit configured to provide a source of light to a user." Ex. 1001, 9:4–5. Claim 13 depends from claim 12 and further recites: "wherein said source of light is at least one LED." *Id.* at 9:6–7. Petitioner cites to the following disclosure of Lei: "an output terminal of the LED driving circuit 12 is connected to a LED lighting lamp 13." Ex. 1008, 6:36–38 (cited at Pet. 43). Petitioner further cites to this description in Lei: "LED lighting lamp may provide outdoor lighting." *Id.* at 5:32–33 (cited at Pet. 43). Petitioner asserts: "A POSITA would have been motivated to

incorporate a flashlight circuit having an LED light source in Richardson's jump starter to provide outdoor lighting for the user, as suggested by Lei." Pet. 43. The assertions are supported by the cited evidence and the reasoning has rational underpinning.

Patent Owner does not present any argument additional to that it presents with respect to claim 1, which we already have discussed and rejected above in the context of claim 1. We are persuaded that the proposed combination of Richardson and Lei is proper and teaches the additional limitations of claims 12 and 13.

Petitioner has proved by a preponderance of the evidence that claims 12 and 13 are unpatentable over Richardson and Lei.

Claim 14 depends from claim 13 and further recites: "wherein said microcontroller is configured to control said at least one LED to provide a visual alarm indicating an emergency situation." Ex. 1001, 9:8–10.

Petitioner cites to the following disclosure of Lei:

> An output terminal of the DC-DC 12V output circuit 10 is connected to an alerting system, 15 for transmitting an alerting signal. . . . A start button of the alerting system 15 can be pressed by the user when he or she is lost or some condition occurs. The alerting system 15 may notice people around for help by lighting the indicator light or transmitting sounds with the alerting system 15.

Ex. 1008, 7:3–13 (cited at Pet. 43). Petitioner asserts that as shown in Lei's Figure 1, alerting system 15 is operably coupled controller circuit 14. Pet. 43. Petitioner further asserts: "A POSITA would have been motivated to incorporate a visual alarm feature indicating an emergency situation controlled by the microcontroller in Richardson's jump starter as a safety feature for the user, as suggested by Lei. Ex. 1002, ¶ 128." *Id.* at 44.

Petitioner's assertions are supported by the cited evidence and Petitioner's reasoning has rational underpinning. Patent Owner does not present any argument additional to that it presents with respect to claim 1, which we already have discussed and rejected above in the context of claim 1. We are persuaded that the proposed combination of Richardson and Lei is proper and teaches the additional limitations of claim 14.

Petitioner has proved by a preponderance of the evidence that claim 14 is unpatentable over Richardson and Lei.

Claim 23 depends from claim 21 and further recites: "wherein said output port and said plug are dimensioned so that the plug will fit into the output port only in one specific orientation." Ex. 1001, 10:20–22. Petitioner cites to the following disclosure of Lei:

> The external smart battery detection system 6 includes a red power source clip and a black power source clip for connecting with an external battery . . . the red and black power source clips are connected to the battery pack through an anti-reverse connector connected to the battery pack through an anti-reverse connector connected to the positive and negative e electrodes of the battery pack 4 or conducting wires welded to the positive and negative electrodes of the battery pack 4.

Ex. 1008, 7:65–8:14. Petitioner asserts that "[t]he insertable anti-reverse connector disclosed by Lei comprises a plug that can fit into the output port only in the correct orientation, not a reversed connection." Pet. 45. Petitioner further explains: "A POSITA would have been motivated to incorporate the insertable anti-reverse connector disclosed by Lei in Richardson's jump starter to avoid a reverse connection, as suggested by Lei, for safe operation and convenience. Ex. 1002, ¶ 132." *Id.* at 45–46.

Petitioner's assertions are supported by the cited evidence and Petitioner's reasoning has rational underpinning. Patent Owner does not

present any argument additional to that it presents with respect to claim 1, which we already have discussed and rejected above in the context of claim 1. We are persuaded that the proposed combination of Richardson and Lei is proper and teaches the additional limitations of claim 23.

Petitioner has proved by a preponderance of the evidence that claim 23 is unpatentable over Richardson and Lei.

I. Alleged Obviousness of Claims 4 and 5 over Richardson and Krieger[9]

Claim 4 depends from claim 1 and further recites: "wherein said power switch comprises a plurality of FETs in parallel." Ex. 1001, 8:43–44. Petitioner identifies Krieger's switch 12 as shown in Krieger's Figure 1 as such a power switch. Pet. 47. Petitioner cites the following description of Krieger: "The switch 12 is preferably a solid state device, such as a transistor, diode, field effect transistor (FET), etc. FIG. 1 represents the switch 12 as a number [of] FETs 12a-12d notes that Figure 1 of Krieger illustrates switch 12 as a number of FETs 12a-12d connected in parallel with each other." Ex. 1009 ¶ 30 (cited at Pet. 47). Petitioner further explains:

> Krieger says by using a solid state switch comprising FETs, "[t]here is no need for any mechanical or electro-mechanical devices, as the FETs are the current handling devices." Ex. 1009, ¶ 0033. Substituting a relay switch in Richardson's jump starter with a solid state switch comprising a plurality of FETs would have been obvious to a POSITA to avoid or reduce electro-mechanical components, as suggested by Krieger. Ex. 1002, ¶ 144.

Pet. 48.

---

[9] For these claims, Patent Owner has not submitted objective evidence for consideration. *See* PO Resp. 41–46.

Petitioner's assertions are supported by the cited evidence and Petitioner's reasoning has rational underpinning. Patent Owner does not present any argument additional to that it presents with respect to claim 1, which we already have discussed and rejected above in the context of claim 1. We are persuaded that the proposed combination of Richardson and Krieger is proper and teaches the additional limitation of claim 4.

Petitioner has proved by a preponderance of the evidence that claim 4 is unpatentable over Richardson and Krieger.

Claim 5 depends from claim 1 and further recites: "wherein said vehicle isolation sensor and reverse polarity sensor comprise optically coupled isolator phototransistors." *Id.* at 8:45–47. Petitioner identifies in Krieger opto-isolator 16 including phototransistor 22, which according to Petitioner performs the functions of both a vehicle isolation sensor and a reverse polarity sensor. Pet. 49–50 (citing Ex. 1009 ¶ 33). Petitioner asserts: "It would therefore be obvious to a POSITA to use one opto-isolator to sense the presence of a vehicle battery and a correct polarity connection, or two opto-isolators if a POSITA wanted to use one for battery detection and another for correct polarity connection, e.g., for redundancy." Pet. 50–51. Petitioner further explains:

> A POSITA would be particularly motivated to use opto-couplers if the type disclose[d] by Krieger for sensing the presence of a vehicle battery and a correct polarity connection because the opto-coupler used in Krieger is an inherently digital device that can be preferable over using analog inputs to the system microcontroller, which may be subject to tests to determine if the vehicle battery is present or reversed. A POSITA would be motivated to simplify the system by using an

> optical coupler for one or both sensing functions, e.g., to provide a compact, packaged jump starter. Ex. 1002, ¶ 150.

Pet. 51.

Petitioner's assertions are supported by the cited evidence, and Petitioner's reasoning has rational underpinning. Patent Owner does not present any argument additional to that it presents with respect to claim 1, which we already have discussed and rejected above in the context of claim 1. We are persuaded that the proposed combination of Richardson and Krieger is proper and teaches the additional limitation of claim 5.

Petitioner has proved by a preponderance of the evidence that claim 5 is unpatentable over Richardson and Krieger.

J. Alleged Obviousness of Claim 6 over Richardson and Wanzong[10]

Claim 6 depends from claim 1, and further recites: "further comprising a plurality of power diodes coupled between said output port and said internal power supply to prevent back-charging of said internal power supply from an electrical system connected to said output port." Ex. 1001, 8:48–52.

Wanzong discloses a voltage regulated battery maintainer and charger apparatus. Ex. 1010, Abstr. Wanzong describes:

> The battery maintainer apparatus also includes a variety of safety features not ordinarily associated with a battery charger including but not limited to a circuit which shuts out charging current when reverse polarity is detected, a feature whereby current is not supplied to the output terminals until said terminals have come in contact with a storage battery of sufficient initial

[10] For this claim, Patent Owner has not submitted objective evidence for consideration. *See* PO Resp. 41–46.

> voltage, thus preventing the output terminals from sparking should they accidentally contact each other prior to hook-up with the storage battery.

Id.

Petitioner explains:

> Wanzong discloses an "isolation diode 160", which acts as the power diodes to prevent back-charging of said internal power supply from an electrical system connected to said output port. Shown in FIG. 1 below, the isolation sensor 160 is between the output port (output terminals 170 and 180) of the charger apparatus and the internal power supply (transformer 20/full wave bridge rectifier 30/ main capacitor). Ex. 1010, 4:10–20; 4:45–53. While the storage battery 150 is being charged, "[c]harging current for the battery will pass through the isolation transistor 110 and out through the final isolation diode 160 to the storage battery 150 under charge." Ex. 1010, 12:15–18. The isolation sensor 160 acts as the power diodes to prevent back-charging of said internal power supply from the storage battery 150.

Pet. 5–53. For additional support, Petitioner cites to the following description in Wanzong:

> When a storage battery 150 containing more than 6 cells is connected to the terminals 170 and 180, the voltage regulator integrated circuit 70 will modulate off the main power transistor 90, current will cease to flow from the voltage regulator integrated circuit to the storage battery 150 and the final isolating diode 160 will be reverse biased and block current flow from the storage battery 150 to the present invention.

Ex. 1010, 13:1–10 (cited at Pet. 53). Petitioner further explains: "While Wanzong shows a single isolating diode 160 in the schematic diagram of FIG. 1[, i]t would be understood by a POSITA that a plurality of isolating diodes could be arranged in parallel to handle higher current flow. Ex. 1002, ¶ 160." Pet. 53.

Petitioner asserts that incorporating Wanzong's isolating diode 160 in Richardson "would have been obvious to [] a POSITA to prevent back-charging of the charging circuit during or after the charging process." *Id.* at 54. Petitioner further asserts that a "POSITA would have been motivated to use an isolating diode 160 to prevent damage to the charging circuit. Ex. 1002, ¶ 161." *Id.*

Petitioner's assertions are supported by the cited evidence, and Petitioner's reasoning has rational underpinning. Patent Owner does not present any argument additional to that it presents with respect to claim 1, which we already have discussed and rejected above in the context of claim 1. We are persuaded that the proposed combination of Richardson and Wanzong is proper and teaches the additional limitation of claim 6.

Petitioner has proved by a preponderance of the evidence that claim 6 is unpatentable over Richardson and Wanzong.

K. Alleged Obviousness of Claim 16 over Richardson and Baxter[11]

Claim 16 depends from claim 15 and further recites: "wherein said plurality of visual indicators comprises a plurality of LEDs providing output light of different colors." Ex. 1001, 9:14–16. Baxter's disclosure relates to safety features provided for batteries and jumper cables. Ex. 1011, 1:4–6. Baxter describes:

> Implementation of the invention provides a connecting cable between two low-voltage systems (such as batteries) that includes a safety circuit. The safety circuit leaves the two low-voltage systems disconnected until it determines that it is safe to

[11] For this claim, Patent Owner has not submitted objective evidence for consideration. *See* PO Resp. 41–46.

> make a connection. If the safety circuit detects an unsafe condition, it responds to the unsafe condition in one or more of several fashions. In some instances, the safety circuit can internally reverse connection polarity to correct for incorrect connections between low-voltage systems of reverse-polarity type. In some instances, the safety circuit provides an audible and/or visible alarm identifying a potential problem. In some instances, the safety circuit refuses to make a connection between the two low-voltage systems while an unsafe condition exists.

Ex. 1011, 1:24–32.

Petitioner asserts that using LEDs to provide output light of different colors to indicate different conditions is plainly obvious by itself. Pet. 55. Nevertheless, Petitioner also relies on Baxter. *Id.* at 55–56. Petitioner cites to the following description in Baxter: "microcontroller 26 can activate a green LED as a signal of proper connection . . . . Alternatively, a red LED might be activated if an improper connection is detected." Ex. 1001, 10:24–31 (cited at Pet. 55–56). Petitioner further asserts that in Baxter, different color LEDs are also used to indicate other conditions, e.g., if the cable clamps accidentally are touching. Pet. 56 (citing Ex. 1011, 12:18–29).

Baxter states: "if the cable clamps accidentally are touching or if the positive clamp is also touching a ground source, the red LED could flash (possibly in a different timing pattern or a different LED), the connection would not be completed, and the user could adjust or reconnect the cables correctly and try again." Ex. 1011, 12:18–26.

Petitioner asserts: "It would be obvious to a POSITA to incorporate LEDs providing output light of different colors in the Richardson device to indicate various conditions, including the capacity status of the internal power supply, since using lights of different colors enables users to readily

view particular conditions clearly and easily." Pet. 56 (citing Ex. 1002 ¶ 170).

Regarding the disclosure of Baxter and the proposed combination of Richardson and Baxter, Petitioner's assertions are supported by the cited evidence and Petitioner's reasoning has rational underpinning. Patent Owner does not present any argument additional to that it presents with respect to claim 1, which we already have discussed and rejected above in the context of claim 1. We are persuaded that the proposed combination of Richardson and Baxter is proper and teaches the additional limitation of claim 16.

Petitioner has proved by a preponderance of the evidence that claim 16 is unpatentable over Richardson and Baxter.

L. Alleged Obviousness of Claim 22 over Richardson and Richardet[12]

Claim 22 depends from claim 21 and further recites: "wherein said jumper cable device further comprises a pair of ring terminals configured to respectively connect said pair of cables at said another end thereof with one of a battery terminal and a battery terminal clamp." Ex. 1001, 10:15–19. Figure 2A of Richardet is reproduced below:

[12] For this claim, Patent Owner has not submitted objective evidence for consideration. *See* PO Resp. 41–46.

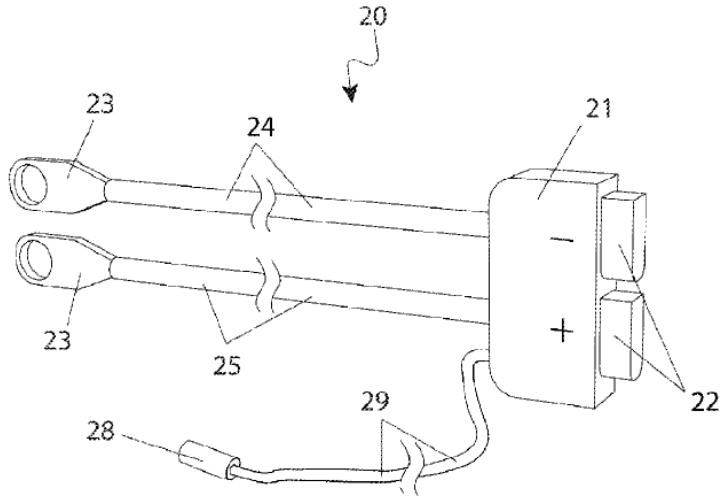

Fig. 2a

Figure 2A is a perspective view of a battery connector assembly portion 20 of a quick-release battery cable system 10. Ex. 1014, 3:5–7. Richardet describes:

> The battery connector assembly 20 comprises a first fastener 21, a pair of battery ring terminals 23, a negative battery cable 24, a positive battery cable 25, and an accessory connector 28. The battery ring terminals 23 provide an attachment means thereto a positive battery terminal 120 and a negative battery terminal 130 thereon a primary battery 100 (see FIG. 3). The battery ring terminals are attached to appropriately gauged battery cables 24, 25 comprising heavy gauged battery cables 24, 25 comprising heavily gauged conductors being approximately five (5) feet long.

Id. at 4:57–63. Petitioner asserts:

> [Figure 2A] discloses a "battery connector assembly 20 comprises a first fastener 21, a pair of battery ring terminals 23, a negative battery cable 24, a positive battery cable 25, and an accessory connector 28. The battery ring terminals 23 provide an attachment means thereto a positive battery terminal 120 and a negative battery terminal 130 thereon a primary battery 100 (see FIG. 3)." Ex. 1014, 4:57–63. Thus, Richardet discloses a pair of ring terminals 23 to connect a pair of cables 24, 25 with battery terminals 120 and 130.

Pet. 65–66. Petitioner further asserts:

> Richardet discloses that its cable systems "provide a battery terminal connection which provides secure and stable connection to a motor vehicle battery or the like adaptable to a variety of common scenarios and which is simple and quick for an average user." Ex. 1014, 1:59–65. Combining Richardet's cable system with ring terminals in Richardson would have been obvious to a POSITA as another advantageous way of connecting cables to a battery. A POSITA would have been particularly motivated to use Richardet's cabling system to provide a secure and stable connection to a vehicle battery in a simple and quick way for an average user, as suggested by Richardet. Ex. 1002, ¶ 204.

Id. at 67.

Regarding the disclosure of Richardet and the proposed combination of Richardson and Richardet, Petitioner's assertions are supported by the cited evidence and Petitioner's reasoning has rational underpinning. Patent Owner does not present any argument additional to that it presents with respect to claim 1, which we already have discussed and rejected above in the context of claim 1. We are persuaded that the proposed combination of Richardson and Richardet is proper and teaches the additional limitation of claim 22.

Petitioner has proved by a preponderance of the evidence that claim 22 is unpatentable over Richardson and Richardet.

M. Alleged Obviousness of Claims 10–13 over Richardson and either Epower-20 or Epower-21

1. Epower-20 and Epower-21

Epower-20 is purported by Petitioner to be a product brochure of Petitioner's Multifunction Jump Starter product "EPower-20," and Epower-21 is purported by Petitioner to be a product brochure of Petitioner's

Multifunction Jump Starter product "EPower-21." Pet. 56. Regarding the status of these brochures as printed publications, Petitioner asserts:

> Both brochures were distributed to attendees of the 115th China Import and Export Fair 2014 in Guangzhou, China ("2014 Canton Fair"), one of the largest trade shows in the world, on April 15 - May 5, 2014. Ex. 2018 at 2. The Epower-20 and E-power 21 jump starters and their brochures were on display and publically accessible to all attendees during the entire period of the 2014 Canton Fair at Carku's booth at the fair. *Id.* The booth was easily accessible to all attendees. *Id.* Carku's staff handed out the brochures and encouraged the visitors to take the brochures. *Id.* The brochures are therefore printed publications available to the public before the July 3, 2014 effective filing date of the '015 patent, and this prior art under 35 U.S.C. § 102(a).

Pet. 56–57. Patent Owner challenges the authenticity of Epower-20 and Epower-21 and has moved to exclude them from evidence. Paper 64. We address those issues in Section II.N. below discussing Patent Owner's Motion to Exclude. Here, we note simply that Patent Owner's Motion to Exclude Epower-20 and Epower-21 from evidence is denied.

2. Claim 10[13]

Claim 10 depends from claim 1 and further recites: "further comprising a USB output port configured to provide charging power from said internal power supply to a USB-chargeable device." Ex. 1001, 8:65–67.

Petitioner asserts:

> 112. The Epower-20 brochure shows two USB output ports at the front of the device below:

[13] For this claim, Patent Owner has not submitted objective evidence for consideration. *See* PO Resp. 41–46.

Ex. 1012 at 1.

113. The "Specification" of the Epower-20 brochure states the "Output" includes "5V/2A, 5V/1A ---mobile phone, tablet PC, other digital devices." A POSITA would understand that the 5V/2A and 5V/1A outputs described and shown are USB outputs for charging mobile phones and other devices. Ex. 1002, ¶ 78.

114. Additionally, the Epower-20 brochure discloses a "3-in-1 Mobile Phone Cable" accessory below with Micro USB, ipPhone4, iPhone5" outputs. The right end of the cable is a USB plug, which a POSITA would understand is plugged into a USB port shown above. Ex. 1012, ¶ 184. The other end of the cable includes the "Micro USB, iPhone4, iPhone5" outputs described in the brochure.

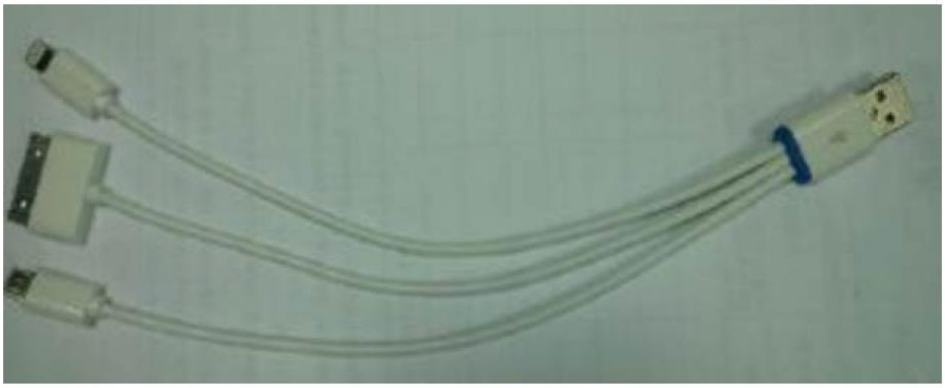

Ex. 1012 at 1.

> 115. The Epower-21 brochure similarly discloses USB output ports.

Pet. 59–60. Petitioner explains: "The USB output ports allow users to charge USB-chargeable devices like cell phones. It would have been obvious to a POSITA to incorporate USB output ports in Richardson as a convenience feature allowing users to also charge electronic devices." Pet. 60.

Petitioner's assertions are supported by the cited evidence and Petitioner's reasoning has rational underpinning. Patent Owner does not present any argument additional to that it presents with respect to claim 1, which we already have discussed and rejected above in the context of claim 1, except to seek to exclude Epower-20 and Epower-21 from evidence. In Section II.N. below, we deny Patent Owner's Motion to Exclude. We are persuaded that the proposed combination of Richardson and Epower-20 and Richardson and Epower-21 are proper and that both combinations teach the additional limitation of claim 10.

Petitioner has proved by a preponderance of the evidence that claim 10 is unpatentable over Richardson and Epower-20, and also over Richardson and Epower-21.

3. Claims 12 and 13[14]

Claim 12 depends from claim 1 and further recites: "further comprising a flashlight circuit configured to provide a source of light to a user." Ex. 1001, 9:4–5. Claim 13 depends from claim 12 and further recites: "wherein said source of light is at least one LED." Ex. 1001, 9:6–7.

Petitioner asserts:

> 124. The Epower-20 and Epower-21 brochures show a flashlight at the font of the devices in the pictures below.

Ex. 1012 at 1

[14] For these claims, Patent Owner has not submitted objective evidence for consideration. *See* PO Resp. 41–46.

Ex. 1013 at 1

125. The Epower-20 brochure also shows the flashlight in operation.

Ex. 1012 at 1

> 126. It would be obvious for a POSITA to use an LED lamp in the flashlight as LED lamps have high energy efficiency. Ex. 1002, ¶ 195.
>
> 127. A POSITA would have been motivated to incorporate a flashlight circuit having an LED light source in Richardson to provide lighting for the user, as suggested by the brochures.

Pet. 63–64.

Petitioner's assertions are supported by the cited evidence and Petitioner's reasoning has rational underpinning. Patent Owner does not present any argument additional to that it presents with respect to claim 1, which we already have discussed and rejected above in the context of claim 1, except to seek to exclude Epower-20 and Epower-21 from evidence. In Section II.N. below, we deny Patent Owner's Motion to Exclude. We are persuaded that the proposed combination of Richardson and Epower-20 and Richardson and Epower-21 are proper and that both combinations teach the additional limitation of claim 12 and the additional limitation of claim 13.

Petitioner has proved by a preponderance of the evidence that claims 12 and 13 are unpatentable over Richardson and Epower-20, and also over Richardson and Epower-21.

4. Claim 11

Claim 11 depends from claim 1 and further recites: "further comprising a USB charging port configured to provide charging power from an external power source to said internal power supply." Ex. 1001, 9:1–3. Petitioner has submitted objective evidence of nonobviousness for this claim. PO Resp. 41–46. However, we determine that Petitioner has not established a prima facie case of obviousness based on the applied

references. Accordingly, consideration and discussion of the objective evidence of nonobviousness is unnecessary.

Petitioner asserts that both Epower-20 and Epower-21 disclose jump starters with USB outputs to charge other devices. Pet. 61 (citing Ex. 1012, 1; Ex. 1013, 1). The assertion is supported by the cited evidence and not disputed by Patent Owner. Petitioner acknowledges that neither Epower-20 not Epower-21 discloses a USB charging port providing charging power from an external power source to an internal power supply. *Id.* Petitioner notes, however, that both Epower-20 and Epower-21 disclose a non-USB, "14V 1A" input port for charging the jump starter with a "Home Charger." *Id.*

Petitioner explains:

> It would be *readily apparent* from the references that a USB port, which is simply a different physical plug and socket combination from the round plug and socket used in the Epower-20 and 21 products, *could also be incorporated* into portable jump starters in place of or in addition to the 14V 1 A input port to charge the internal batteries of jump starter devices. *A POSITA would be motivated to provide such a USB charging port to provide the added convenience to users of using another commonly used power input for charging the jump starter device.* Ex. 1002, ¶ 190.

Id. at 62 (emphasis added).

For several reasons, we determine that Petitioner's articulation of a motivation for one with ordinary skill in the art to incorporate a USB input charging port in Richardson based on Epower-20's or Epower-21's disclosure is conclusory and not adequately supported by the evidence submitted with the Petition. Dr. Kirtley's testimony, cited in the above-

quoted argument, reads essentially the same as the quoted text and adds nothing more.[15]

In his Declaration, Dr. Kirtley does not identify any jump starter device having a USB input charging port. Ex. 1002 ¶ 189. Dr. Kirtley also does not explain whether all USB ports, if found on a device, are capable of (without redesign or adaptation) providing output charging power to a USB input charging port, and if not all, then which ones on what devices. The record suggests that not all USB ports serve both to output and receive power, because Petitioner does not identify the USB output charging port of Epower-20 or Epower-21 as also a USB input charging port. Further, in paragraph 189 of his Declaration (Ex. 1002), Dr. Kirtley provides no explanation for the embedded assertion that a USB port is commonly used as a power input to devices, e.g., how common and to what types of devices.

The matter is much more complicated than what Petitioner's argument makes it out to be. There is insufficient accounting by Petitioner of the expectation at the time of one with ordinary skill in the art about the ease or difficulty in locating a usable source to provide input charge to a USB port on a jump starter. In the absence of sufficient explanation and supporting evidence, which is the case here, we are not persuaded by Petitioner's conclusory assertion that "[a] POSITA would be motivated to provide such a USB charging port to provide the added convenience to users of using another commonly used power input for charging the jump starter device." Pet. 62. The Federal Circuit has stated that "[t]his assessment of basic knowledge and common sense was not based on any evidence in the record

[15] Petitioner mis-cites the location of Dr. Kirtley's testimony on this subject. It is located in paragraph 189, not paragraph 190, of Exhibit 1002.

and, therefore, lacks substantial evidentiary support." *In re Zurko*, 258 F.3d 1379, 1385 (Fed. Cir. 2001).

In the Patent Owner Response, Patent Owner provides its own reasons why it would not have been obvious to one with ordinary skill in the art to include in a jump starter a USB input charging port. PO Resp. 36–46. But the burden is on Petitioner to demonstrate unpatentability. 35 U.S.C. § 316(e) (2018); *see also Dynamic Drinkware*, 800 F.3d at 1378. We need not discuss Patent Owner's showings with regard to claim 11, because, as discussed above, based on the arguments and evidence submitted by Petitioner in its Petition, Petitioner has not established obviousness of claim 11 over the applied references. Likewise, we need not consider and discuss the rebuttal arguments and evidence submitted by Petitioner in its Reply. The deficiencies discussed above with respect to the Petition cannot be cured by additional arguments, explanations, and evidence submitted in the Reply.

For the foregoing reasons, Petitioner has not proved by a preponderance of the evidence that claim 11 is unpatentable over Richardson and Epower-20, or Richardson and Epower-21.

N. Patent Owner's Motion to Exclude

Patent Owner filed a Motion to Exclude. Paper 64. For reasons discussed below, the Motion is *denied*.

1. Lei Declaration (Exhibit 1022) and Exhibits attached Thereto[16]

Patent Owner seeks to exclude the photographs attached to the Lei Declaration (Exhibit 1022) as Exhibit A on the ground of hearsay. Paper 64, 1–2. Patent Owner asserts: "[T]hese pictures constitute hearsay as they are being offered for the truth of the matters asserted therein, namely that there were displays at the 2014 Canton Fair showing large photos and models of the Epower-20B and Epower-21 devices." *Id.* at 2.

We disagree that either photograph constitutes a statement that there were displays at the 2014 Canton Fair showing large photos and models of the Epower-20B and Epower-21 devices. What the photographs depict depends on and is determined by the in court testimony of Xingliang (Leon) Lei. It is Mr. Lei who has testified that there was a Carku (Petitioner) booth at the 2014 Canton Fair and that Carku provided to attendees of the Fair information about Carku's Epower-20 and Epower-21 products. Ex. 1022 ¶ 3. Mr. Lei authenticated the photographs in Exhibit A of his declaration as a true and correct depiction of the Carku booth at the Canton Fair: "I have attached as Exhibit A true and correct copy of photographs showing the Carku booth at the 2014 Canton Fair, which also show some of the information Carku provided to attendees about its Epower-20 (including variants such as the Epower-20B) and Epower-21 products." *Id.* Mr. Lei also testifies: "I appear in the second picture of Exhibit A, wearing a white shirt, a black belt, and gray slacks and standing on the right side of the

[16] Petitioner originally submitted a Declaration of Ms. Yingchun Wan in support of the Petition. Ex. 1018. However, because Ms. Wan could not be made available for cross-examination at a suitable location, Petitioner requested and we authorized the substitution of Ms. Wan's Declaration by a Declaration from Mr. Xingliang Lei. Paper 32.

picture." *Id.* The photographs do not add anything to the testimony of Mr. Lei, and Petitioner does not need to rely on the photographs to prevail. For all of these reasons, we deny Patent Owner's Motion to Exclude insofar as it is directed to the two photographs in Exhibit A of Exhibit 1022.

Patent Owner seeks to exclude Exhibits B and C attached to the Lei Declaration. Paper 64, 2–3. Exhibit B is a brochure from the Canton Fair about the Canton Fair itself, and Patent Owner asserts that it is inadmissible hearsay for the truth of its contents. *Id.* at 2. Exhibit C is a press release of the Canton Fair which states the number of attendees at the Canton Fair, and Patent Owner asserts that it is offered for the truth of the matter asserted and thus constitutes inadmissible hearsay. *Id.* at 3. However, we have not relied on either Exhibit B or Exhibit C of Mr. Lei's declaration to support any determination in favor of Petitioner's contentions. Thus, exclusion of Exhibits B and C of the Lei declaration (Ex. 1022) is unnecessary. We deny Patent Owner's Motion to Exclude insofar as it is directed to Exhibits B and C of Exhibit 1022.

Patent Owner seeks to exclude Exhibit D attached to the Lei Declaration, which are copies of Exhibits 1012 (Epower-20) and Exhibit 1013 (Epowwer-21). Paper 64, 3. In other words, Patent Owner seeks to exclude Exhibits 1012 and 1013, which are prior art references on the basis of which Petitioner asserts unpatentability of claims 10–13. Patent Owner states that it moves to exclude Epower-20 and Epower-21 on the ground that they do not constitute printed publications. *Id.*

There are two problems with this assertion and approach. First, assuming that Epower-20 and Epower-21 do not constitute printed publications, Patent Owner has not articulated and established any basis for

determining that they are inadmissible under the Federal Rules of Evidence. Second, whether Epower-20 and Epower-21 constitute printed publications based on the supporting testimony of Mr. Lei is a substantive issue on the merits and should have been raised, if at all, in the Supplemental Patent Owner Response and/or Corrected Patent Owner Supplemental Response where Patent Owner first discusses the Lei Declaration. However, the matter was not raised in those filings. Patent Owner may not properly raise the issue in a motion to exclude evidence. This argument is belated and not entitled to consideration.

In any event, in the alternative, even if we do consider the belated argument, Petitioner has sufficiently shown that Epower-20 and Epower-21 each constitute a printed publication. Mr. Lei testifies: "The Canton Fair is one of the largest trade shows in the world." Ex. 1022 ¶ 5. The asserted fact is not disputed by Patent Owner. Mr. Lei also testifies that Carku employees "handed out brochures describing the Epower-20 and Epower-21 jump starter products at the 2014 Canton Fair." *Id.* ¶ 6. Mr. Lei further testifies: "Attached to this declaration as Exhibit D are true and correct copies of brochures describing the Epower-20 and Epower-21 jump starter products that Carku published and distributed at the 2014 Canton Fair." *Id.* This testimony alone is sufficient to demonstrate, by a preponderance of the evidence, that Epower-20 and Epower-21 are printed publications.

Patent Owner asserts: "these brochures [Epower-20 and Epower-21] were at best distributed for a period of only five days and without any particular estimate of the quantity of brochures that visitors may have taken, let alone who may have taken them." Paper 64, 4. Patent Owner further asserts:

> Mr. Lei further testified that "the people who visited our booth . . . had a variety of backgrounds. Some of them were professionals in the field, and others were common buyers who were interested in our products." (Ex. 1022 at ¶ 7.) This loose testimony simply does not provide any basis on which this Board can conclude that the brochures were adequately distributed to persons of ordinary skill in the art.

Id. These arguments are unavailing. There is no requirement that brochure distribution must occur continually during the entire period a trade show is open or in session. Petitioner's five-day participation at the 2014 Canton Fair is substantial and sufficient, even though the entire duration of the 2014 Canton Fair is twenty days. Also, the precise number of attendees who visited Petitioner's booth and who actually received copies of Epower-20 and/or Epower-21 does not have critical significance. What is important is that anyone with an interest in jump starters could have visited Petitioner's booth at the 2014 Canton Fair and obtained copies of Epower-20 and Epower-21. We note again that Mr. Lei has testified that "[t]he Canton Fair is one of the largest trade shows in the world." Ex. 1022 ¶ 5. That assertion is uncontroverted by Patent Owner. Petitioner does not have to keep a precise tally of the specific backgrounds of all the visitors to its booth.

Patent Owner further argues that because Mr. Lei incorrectly stated in his Declaration that he attended and worked at the Carku booth "for the entire 2014 Canton Fair from April 15 to May 5, 2014," and that Epower-20 and Epower-21 brochures were distributed during the entire period of the Fair from April 15 – May 5, 2014, Mr. Lei had an insufficient command of the English language or did not review his declaration carefully enough. PO

Supp. Resp. 4–5.[17] On that basis, Patent Owner asserts that Mr. Lei's testimony is suspect and the overall status of Mr. Lei's Declaration is in serious question. *Id.* at 5.

We disagree that the rest of Mr. Lei's testimony is suspect simply because he misstated that Petitioner had a booth at the 2014 Canton Fair for the entire duration of the fair and he worked at the booth for the entire duration of the Fair. When asked at cross examination about the period of Petitioner's attendance at the 2014 Canton Fair, he stated only the first phase of the Fair, which was from April 15th to April 19th, without hesitation or reservation. Ex. 2024, 62:10–63:11. The mistake in his Declaration reasonably could have been be due to an association of his attendance at the Fair to the duration of the Fair. Without more, we decline to characterize the rest of Mr. Lei's testimony as suspect or in serious question.

For all of these reasons, we deny Patent Owner's Motion to Exclude insofar as it is directed to Exhibit D of the Lei Declaration (Ex. 1022), which are copies of Exhibits 1012 and 1013 (Epower-20 and Epower-21).

Patent Owner seeks to exclude Exhibit E attached to the Lei Declaration. Paper 64, 3 n.1. Exhibit E is an email sent by Mr. Lei to a distributor of Petitioner's products, to which is attached "a product brochure for Carku's Epower-21 product and intelligent jumper cable." Ex. 1022 ¶ 9. Patent Owner states: "Because the brochure allegedly included with Exhibit E is not the same as Exhibit D, or Exhibits 1012 or 103, [Patent Owner] moves to exclude Exhibit E for lack of relevance." Paper 64, 3 n.1. We

[17] Mr. Lei, on cross-examination, testified that Petitioner only participated in the first phase of the Canton Fair, which was from April 15 to April 19, 2014. Ex. 2024, 62:10–63:11.

have not relied on Exhibit E in the Lei Declaration in any way adverse or unfavorable to Patent Owner. Exclusion of Exhibit E is unnecessary. We deny Patent Owner's Motion to Exclude insofar as it is directed to Exhibit E of the Lei Declaration (Ex. 1022).

Patent Owner also seeks to exclude the entirety of the Lei Declaration (Ex. 1022). Paper 64, 1. However, Patent Owner provides no reasons for exclusion other than those already discussed above with respect to Exhibits A through E attached to the Lei Declaration. For the same reasons discussed above, we deny Patent Owner's Motion to Exclude insofar as it is directed to the entirety of the Lei Declaration (Ex. 1022).

2. Exhibits 1026–1029, and 1047

Patent Owner asserts: "These related exhibits comprise contentions or reports (or portions thereof) prepared in other proceedings by Patent Owner and/or its expert, Dr. Jonathan Wood and are used by the Petitioner to seek to undercut Dr. Wood's credibility." Paper 64, 6.

Patent Owner asserts that Exhibit 1026 is irrelevant, or that the probative value of Exhibit 1026 is substantially outweighed by its potential for prejudice or confusion, citing Federal Rules of Evidence 401 and 403. *Id.* Patent Owner states: "Exhibit 1027 is only a portion of a report by Dr. Wood regarding infringement of the '015 Patent by an entity other than Petitioner. The exhibit is incomplete, as it itself comprises a public portion of a filing in court that included other, confidential elements." *Id.* at 6–7. Patent Owner asserts that Exhibit 1027 is incomplete, irrelevant, or has a probative value that is substantially outweighed by its potential for prejudice or confusion, citing Federal Rules of Evidence 106, 401, and 403. *Id.*

EXHIBIT 1014
Petitioner ADC (IPR2024-00671)

Regarding Exhibit 1028, Patent Owner states that it "comprises contentions against an entity other than Petitioner, and in this case there is no evidence that Dr. Wood ever reviewed the documents." *Id.* at 7. Patent Owner further states: "Thus, Patent Owner moves to exclude this exhibit as lacking authentication under F.R.E. 901 as well as lack of relevance under F.R.E. 401, or that its probative value is substantially outweighed by its potential for prejudice or confusion under F.R.E. 403." *Id.*

Regarding Exhibit 1029, Patent Owner states: "Exhibit 1029 is an infringement chart regarding the '015 Patent from a pending ITC investigation. However, Dr. Wood testified that he did not recall having seen Exhibit 1029." *Id.* at 7. Patent Owner asserts that Exhibit 1029 lacks authentication, is irrelevant, or has a probative value that is substantially outweighed by its potential for prejudice or confusion, citing Federal Rules of Evidence 401, 403, and 901. *Id.*

With respect to Exhibit 1047, cross-examination testimony of Dr. Wood, Patent Owner seeks to exclude "those portions of Dr. Wood's testimony pursuant to the objections noted on the record therein discussing Exhibits 1026–1029," *Id.* at 8.

We have not used or relied on the aforementioned materials which Patent Owner seeks to exclude in any way that supports, adds to, or otherwise strengthens Petitioner's assertions on any issue. Thus, it is unnecessary to exclude them from the record. We deny Patent Owner's Motion to Exclude insofar as it is directed to Exhibits 1026–1029, and portions of Exhibit 1047.

3. Exhibits 1030–1037, 1048, and 1050

Patent Owner seeks to exclude Exhibits 1030–1037, as well as those portions of Mr. Nook's deposition transcript (Ex. 1048) and Dr. Kirtley's reply declaration (Ex. 1050) that discuss these exhibits. Paper 64, 8. Patent Owner explains that Exhibits 1030–1037 are emails and attachments that were originally submitted in this proceeding as sub-exhibits to Ms. Wan's Declaration and were not submitted with or referred to in Mr. Lei's Declaration which replaced Ms. Wan's Declaration. *Id.* Patent Owner explains:

> This being the case, Petitioner has attempted to re-introduce these exhibits through the "back-door" by asking Mr. Nook, the alleged recipient or sender of various of the emails, about them at his deposition. Unsurprisingly, as these emails were allegedly exchanged between seven and eight years ago, Mr. Nook testified that he did not recall sending or receiving the emails in question. (Ex. 1048 at 36–96, passim; 165–176.) Accordingly, without supporting testimony from Ms. Wan or Mr. Nook, these emails are unauthenticated, and the alleged truth of any matter that may be asserted in the emails, particularly by Ms. Wan, constitutes hearsay outside any exception. Therefore, Patent Owner moves to exclude these emails, and the related portions of Mr. Nook's transcript, under Rules 802 and 901.

Id. at 8–9. Patent Owner further contends that these emails and email attachments are also irrelevant and highly prejudicial. *Id.* at 9–10. Patent Owner explains that Exhibits 1030–1037 make reference to another product allegedly sold by Petitioner, i.e., the Epower-10, which allegedly includes a USB charging input, and, yet, the Petition lacks "any reference to the Epower-10 as a basis for asserting the invalidity of Claims 10–13 in Ground 6." *Id.* at 10.

We have not used or relied on the aforementioned materials which Patent Owner seeks to exclude in any way that supports, adds to, or otherwise strengthens Petitioner's assertions on any issue, and we are fully cognizant that no documentation about the Epower-10 product is the basis of any alleged ground of unpatentability of claims 10–13. Thus, it is unnecessary to exclude Exhibits 1030–1037 and those portions of Exhibits 1048 and 1050 which make reference to materials in Exhibits 1030–1037. We deny Patent Owner's Motion to Exclude insofar as it is directed to Exhibits 1030–1037, and portions of Exhibits 1048 and 1050 which make reference to Exhibits 1030–1037.

4. Exhibit 1049

Exhibit 1049 is the cross examination testimony of James Richard Stanfield, a named co-inventor of the '015 patent.

Patent Owner asserts:

> First, Mr. Stanfield was questioned at length regarding work he did at a company he had founded prior to joining NOCO regarding a certain marine battery charging product. (Ex. 1049 at 82–100.) There is no written material in the record regarding this device, and it is not being relied on by Petitioner as a basis to challenge any claim of the '015 Patent. It is beyond the scope of the declaration that Mr. Stanfield provided (Ex. 2018) and is irrelevant to any issue in this proceeding. Therefore, Patent Owner moves to have the Board sustain the objections posed by counsel on the record at the deposition regarding this testimony.

Paper 64, 13.

We have not used or relied on the aforementioned materials which Patent Owner seeks to exclude in any way that supports, adds to, or otherwise strengthens Petitioner's assertions on any issue. Thus, it is unnecessary to exclude them from the record.

Patent Owner also seeks to exclude testimony of Mr. Stanfield regarding Exhibits 1030–1037 (Ex. 1049 at 116–134, 140–148, 153–179) for the same reasons it asserts those exhibits and Mr. Nook's testimony (Ex. 1048) regarding those exhibits should be excluded. Paper 64, 13. As noted above, however, we deny the request to exclude Exhibits 1030–1037 and portions of Exhibit 1048 discussing those exhibits.

For the foregoing reasons, we deny Patent Owner's Motion to Exclude insofar as it is directed to materials within Exhibit 1049.

O. Petitioner's Motion to Exclude

Petitioner seeks to exclude Exhibit 2025. Paper 65, 1. Exhibit 2025 is the cross examination transcript of Dr. James L. Kirtley, dated May 27, 2021, and was submitted by Patent Owner with its Sur-Reply. *Id.* Petitioner asserts that Exhibit 2025 should be excluded because it is incomplete, and that Exhibit 2025 is incomplete because Patent Owner did not also submit a copy of an exhibit introduced during the cross examination, which was marked on Exhibit 2025 as Exhibit 1. *Id.* at 1 (citing Ex. 2025, 137; Federal Rule of Evidence 403). Petitioner asserts that "[n]early 40 of the 112 pages of the questioning by Patent Owner's counsel was about Exhibit 1," and that

> without including Exhibit 1 from the deposition in the record in this trial, a document that was discussed for over a third of the deposition, the probative value of the deposition transcript in Exhibit 2025 is outweighed by confusion of issues associated with testimony concerning a deposition exhibit that is not in the record."

Id. at 1–2.

Petitioner does not inform us whether Patent Owner in any substantive briefing cites to or relies on portions of Exhibit 2025 which discusses Exhibit 1 of Exhibit 2025. If not, we do not see why Patent Owner has to

submit internal Exhibit 1 of Exhibit 2025. In any event, Petitioner has submitted Exhibit 1 of Exhibit 2025 as Exhibit 1051, when filing Petitioner's Motion to Exclude. Thus, the missing material is now in the record as Exhibit 1051.

For the foregoing reasons, Petitioner's Motion to Exclude is *denied*.

III. CONCLUSION[18]

Petitioner has proved by a preponderance of the evidence that claims 1–10 and 12–23 of the '015 patent are unpatentable. Petitioner has not proved by a preponderance of the evidence that claim 11 is unpatentable. The outcome is summarized in the following table:

[18] Should Patent Owner wish to pursue amendment of the challenged claims in a reissue or reexamination proceeding subsequent to the issuance of this decision, we draw Patent Owner's attention to the April 2019 *Notice Regarding Options for Amendments by Patent Owner Through Reissue or Reexamination During a Pending AIA Trial Proceeding*. 84 Fed. Reg. 16,654 (Apr. 22, 2019). If Patent Owner chooses to file a reissue application or a request for reexamination of the challenged patent, we remind Patent Owner of its continuing obligation to notify the Board of any such related matters in updated mandatory notices. *See* 37 C.F.R. § 42.8(a)(3), (b)(2).

Claims	35 U.S.C. §	Reference(s)/ Basis	Claim Shown Unpatentable	Claim Not Shown Unpatentable
1, 7–9, 15, 17–21	102	Richardson	1, 7–9, 15, 17–21	
2, 3, 12–14, 23	103	Richardson, Lei	2, 3, 12–14, 23	
4, 5	103	Richardson, Krieger	4, 5	
6	103	Richardson, Wanzong	6	
16	103	Richardson, Baxter	16	
10, 12, 13	103	Richardson and either Epower-20 or Epower-21	10, 12, 13	
11	103	Richardson and either Epower-20 or Epower-21		11
22	103	Richardson, Richardet	22	
1, 7, 21	102	Klang	1, 7, 21	
4, 5	103	Klang, Krieger	4, 5	

Claims	35 U.S.C. §	Reference(s)/ Basis	Claim Shown Unpatentable	Claim Not Shown Unpatentable
22	103	Klang, Richardet	22	
23	103	Klang, Lei	23	
Overall Outcome			1–10, 12–23	11

IV. ORDER

Accordingly, it is

ORDERED that claims 1–10 and 12–23 of U.S. Patent No. 9,007,015 B1 have been proved unpatentable;

FURTHER ORDERED that claim 11 of U.S. Patent No. 9,007,015 B1 has not been proved unpatentable; and

FURTHER ORDERED that, because this is a Final Written Decision, parties to the proceeding seeking judicial review of this decision must comply with the notice and service requirements of 37 C.F.R. § 90.2.

Counsel for Petitioner:

Kevin J. Patariu
Bing Ai
John P. Schnurer
John Esterhay
Perkins Coie LLP
patariu-ptab@perkinscoie.com
ai-ptab@perkinscoie.com
schnurer-ptab@perkinscoie.com
esterhay-ptab@perkinscoie.com

Counsel for Patent Owner:

William H. Oldach III
Rex W. Miller, II
William L. Klima
Vorys, Sater, Seymour and Pease, LLP
wholdach@vorys.com
rwmiller@vorys.com
wlklima@vorys.com