US009506446B2

(12) **United States Patent**
Xinfang

(10) **Patent No.: US 9,506,446 B2**
(45) **Date of Patent: Nov. 29, 2016**

(54) **MOBILE POWER BANK**

(71) Applicant: **Spacekey (USA), Inc.**, La Puente, CA (US)

(72) Inventor: **Liu Xinfang**, Guangzhou (CH)

(73) Assignee: **SPACEKEY (USA), INC.**, La Puente, CA (US)

(*) Notice: Subject to any disclaimer, the term of this patent is extended or adjusted under 35 U.S.C. 154(b) by 349 days.

(21) Appl. No.: **14/069,262**

(22) Filed: **Oct. 31, 2013**

(65) **Prior Publication Data**

US 2015/0054336 A1 Feb. 26, 2015

(51) **Int. Cl.**

B60L 1/00	(2006.01)
F02N 11/12	(2006.01)
B60R 16/033	(2006.01)
H02J 7/00	(2006.01)
B60L 11/18	(2006.01)
H02J 1/00	(2006.01)

(52) **U.S. Cl.**

CPC ***F02N 11/12*** (2013.01); ***B60R 16/033*** (2013.01); ***H02J 7/0047*** (2013.01); ***H02J 7/0054*** (2013.01); *B60L 11/1816* (2013.01); *H02J 1/00* (2013.01); *H02J 2001/006* (2013.01); *H02J 2007/005* (2013.01)

(58) **Field of Classification Search**

CPC ... B60R 16/033; H02J 7/0047; H02J 7/0054; H02J 2007/005; H02J 1/00; H02J 2001/006; F02N 11/12; B60L 11/1816

See application file for complete search history.

(56) **References Cited**

U.S. PATENT DOCUMENTS

5,793,185 A * 8/1998 Prelec H01M 2/1072 320/104
8,324,868 B2 * 12/2012 Choi B60K 6/28 307/64
2003/0222505 A1 * 12/2003 Randall H02J 7/345 307/64
2004/0054775 A1 * 3/2004 Poliac G06F 19/363 709/224
2009/0206841 A1 * 8/2009 Weng G01R 31/3658 324/426
2010/0060203 A1 * 3/2010 Holmes H05B 33/0815 315/307
2010/0109931 A1 * 5/2010 Esnard H01F 38/14 341/176
2012/0130153 A1 * 5/2012 Bolyard A61M 1/1086 600/17
2013/0101874 A1 * 4/2013 Pevear H02J 7/0026 429/50
2013/0154543 A1 * 6/2013 Richardson H02J 7/007 320/104
2014/0139175 A1 * 5/2014 Gonzalez F02N 11/12 320/101
2015/0028797 A1 * 1/2015 Miller H02J 7/0042 320/103
2015/0207339 A1 * 7/2015 Hamburgen H02J 7/007 320/103
2015/0228419 A1 * 8/2015 Fadell G08B 17/00 307/112

* cited by examiner

Primary Examiner — Daniel Cavallari

(74) *Attorney, Agent, or Firm* — Sanford Astor, Esq.; Brooks Kushman P.C.

(57) **ABSTRACT**

An apparatus for providing power, the apparatus having a housing; a battery module positioned inside of the housing, the battery module having: a battery, a battery circuit board coupled to the battery and an ignition output port coupled to the battery circuit board; a circuit board positioned inside of the housing and coupled to the battery module, the circuit board having: a charge module, a discharge module, a lighting module and a control module coupled to the charge module, the discharge module and the lighting module; a light source coupled to the circuit board; and wherein the apparatus is configured to provide sufficient power to jump start a vehicle.

25 Claims, 7 Drawing Sheets

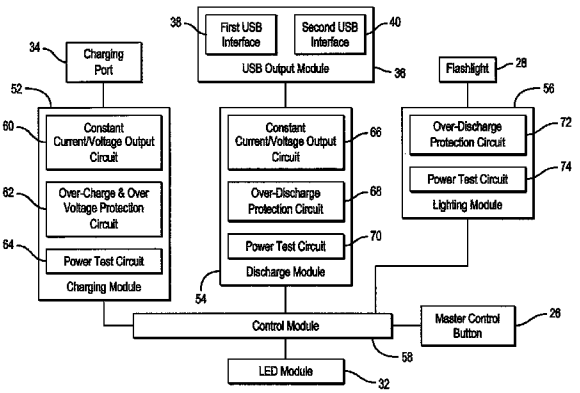

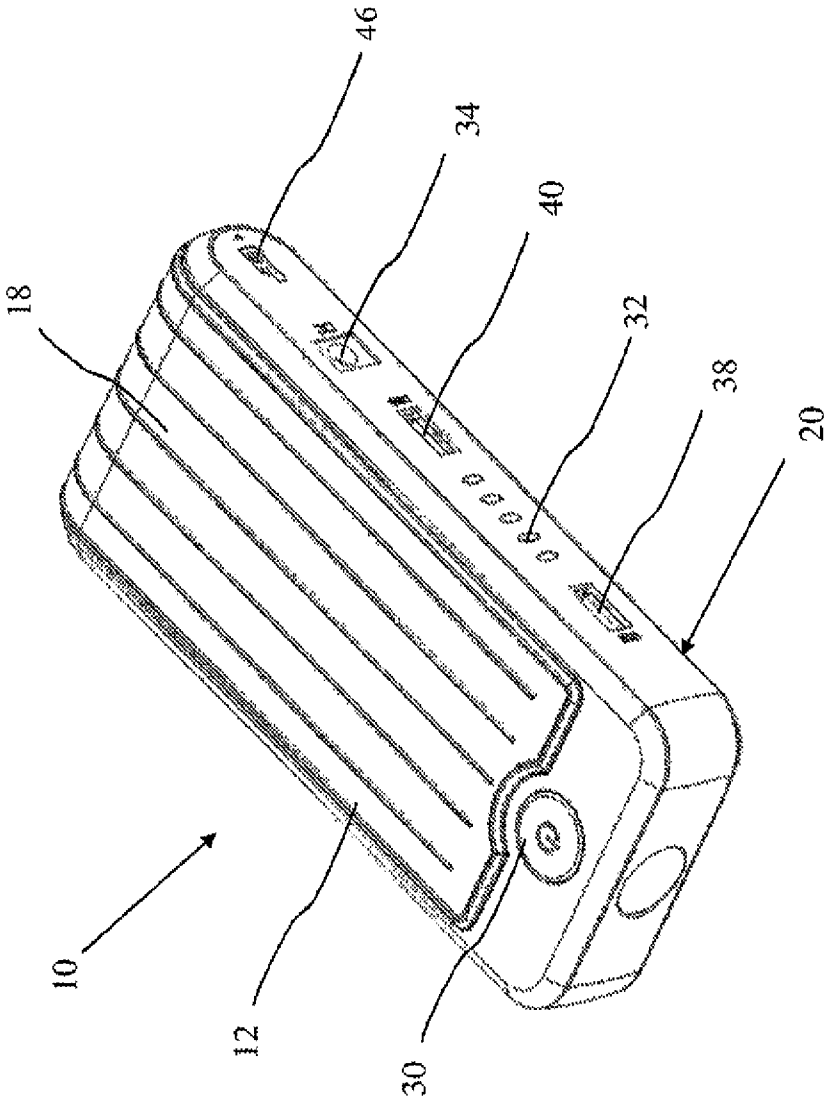

FIG. 1

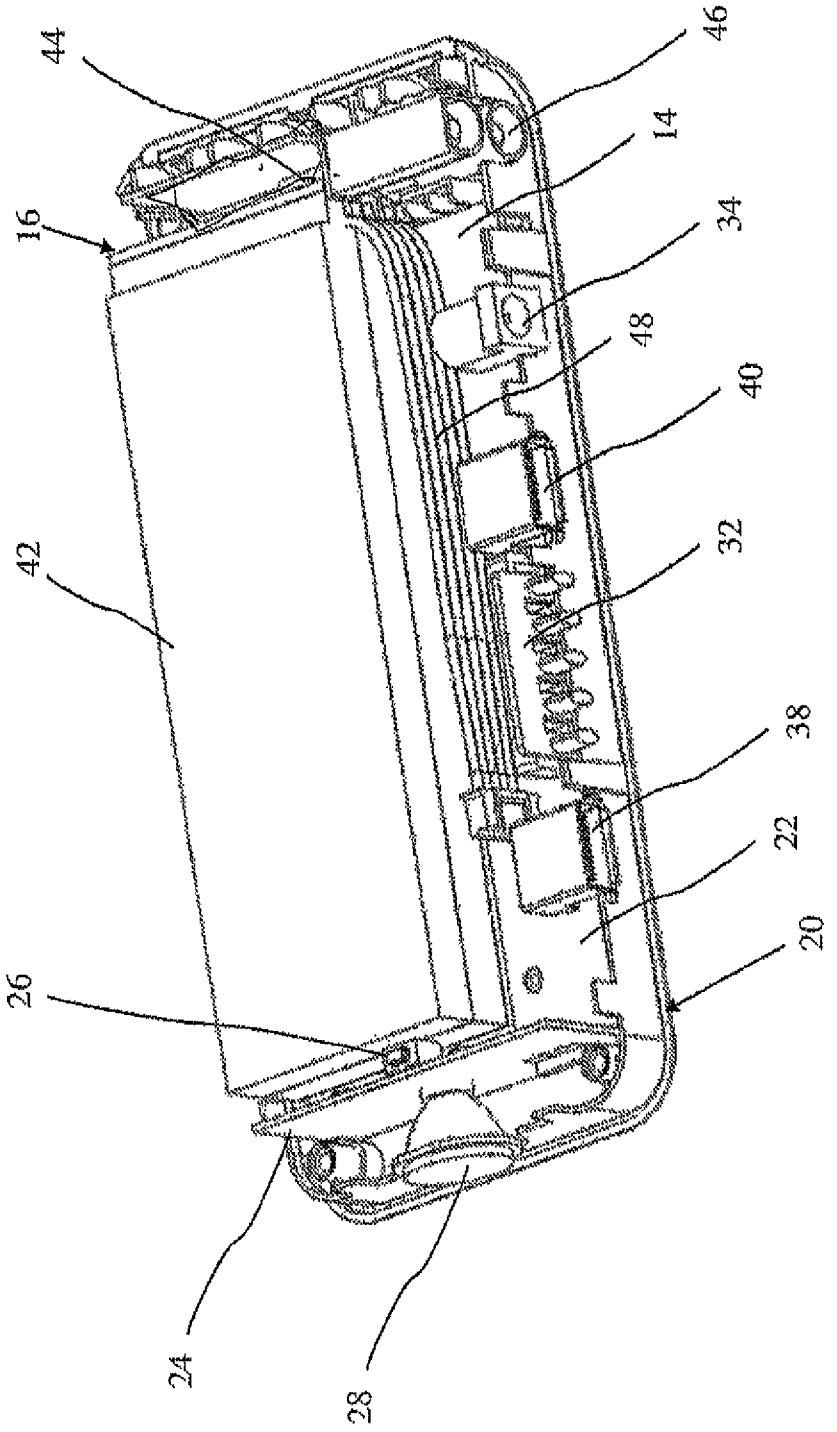

FIG. 2

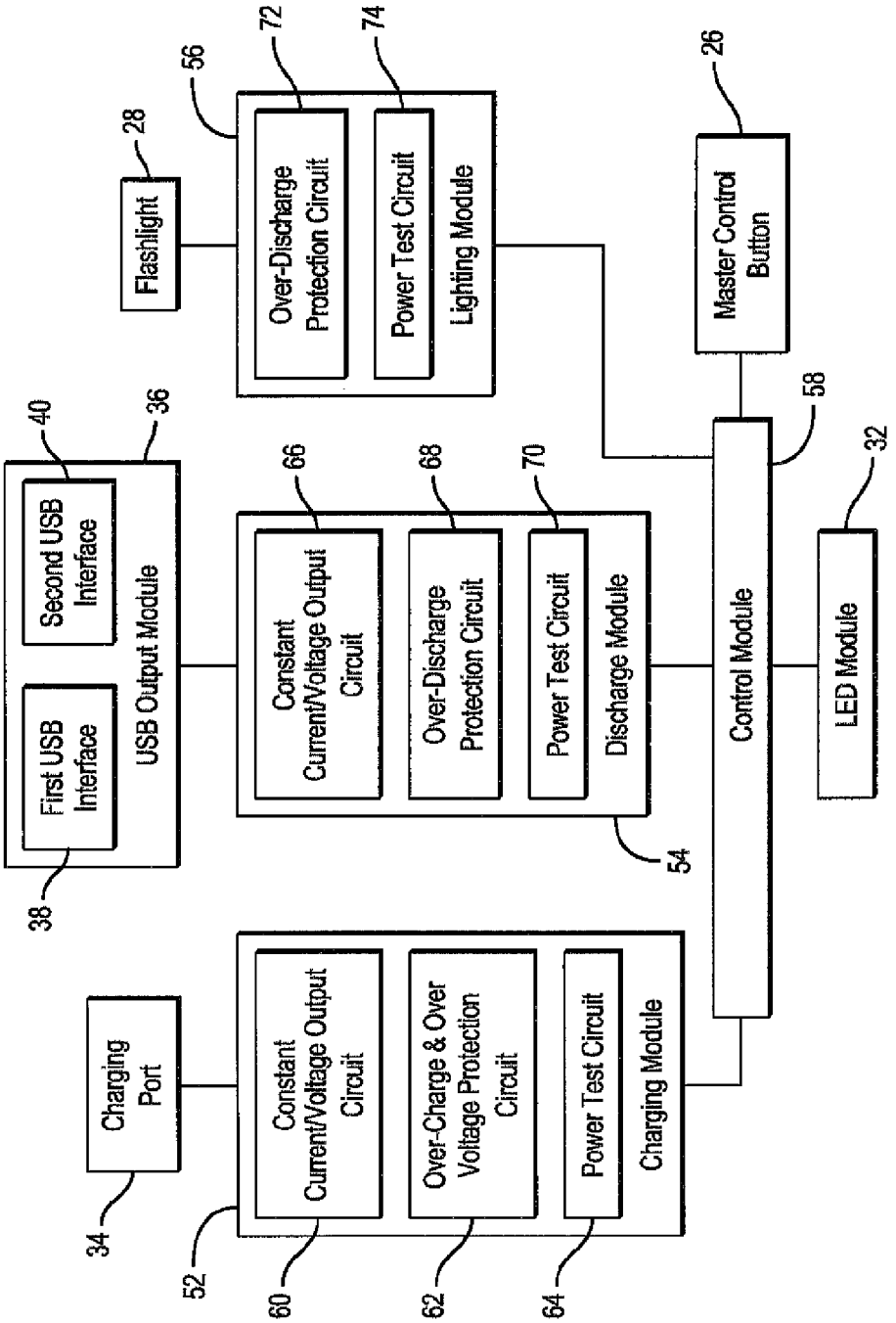
Flashlight
28
56
Over-Discharge Protection Circuit
72
Power Test Circuit
74
Lighting Module
Master Control Button
26
58
Second USB Interface
40
First USB Interface
38
USB Output Module
36
Constant Current/Voltage Output Circuit
66
Over-Discharge Protection Circuit
68
Power Test Circuit
70
Discharge Module
54
Control Module
LED Module
32
Charging Port
34
Constant Current/Voltage Output Circuit
52
60
Over-Charge & Over Voltage Protection Circuit
62
Power Test Circuit
64
Charging Module

FIG. 3

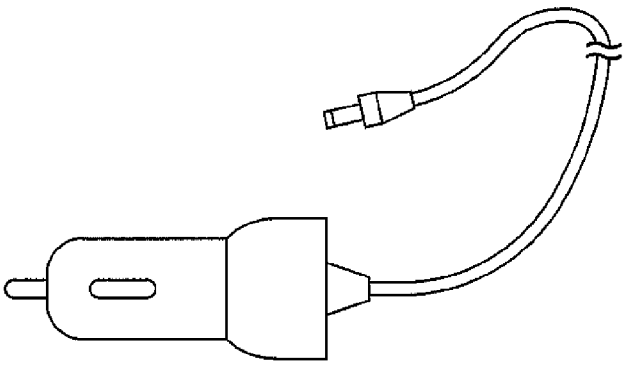

FIG. 3C

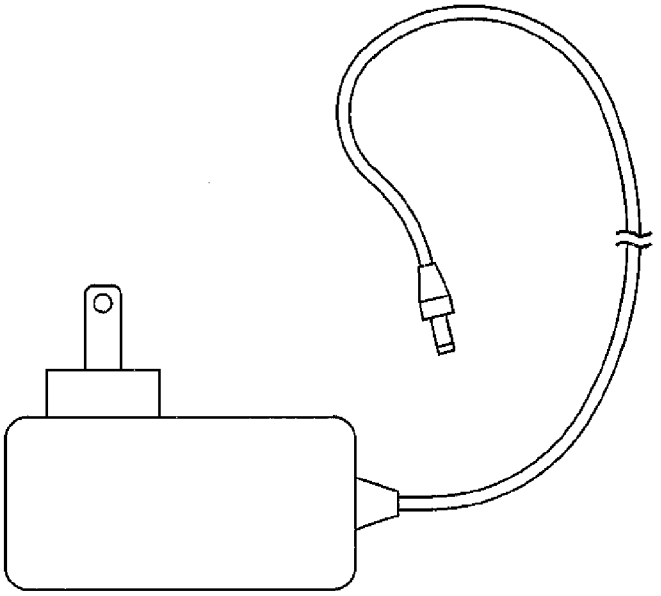

FIG. 3B

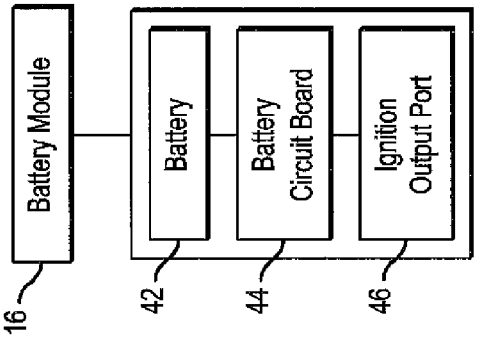

FIG. 3A

FIG. 5

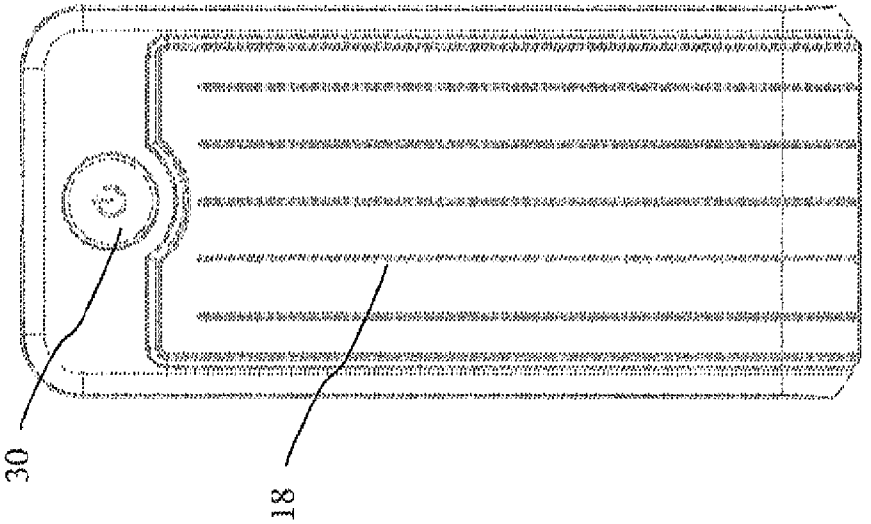

FIG. 4

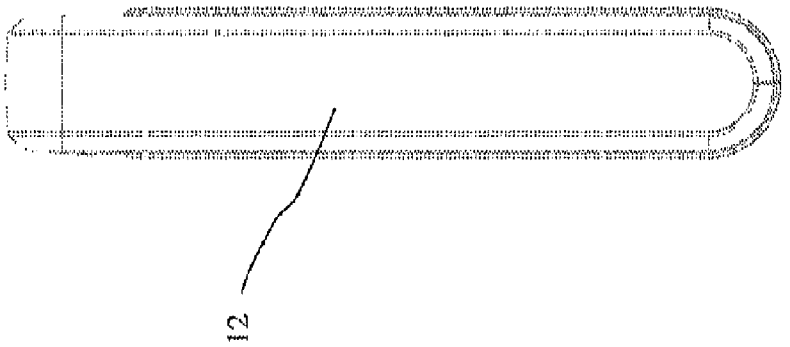

FIG. 7

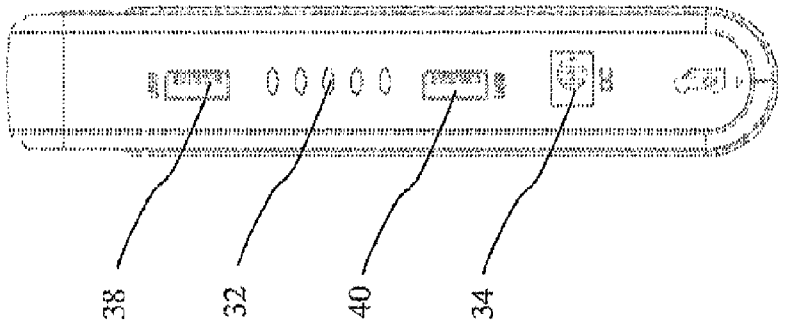

FIG. 6

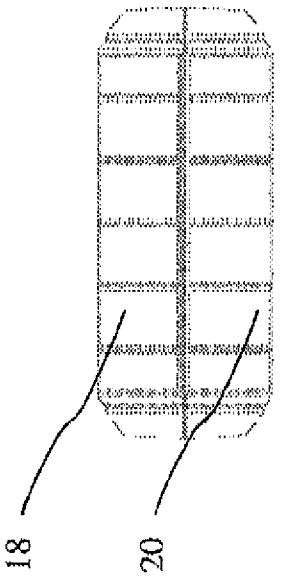

FIG. 9

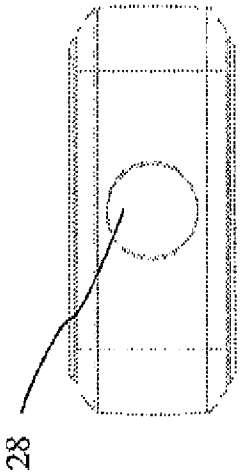

FIG. 8

MOBILE POWER BANK

CROSS REFERENCE TO RELATED APPLICATION

This application claims priority of Chinese Patent Application No. 201320516513.9, filed on Aug. 23, 2013, the entire contents of which are hereby incorporated herein by reference. This application claims priority of Chinese Patent Application No. 201320516504.X, filed on Aug. 23, 2013, the entire contents of which are hereby incorporated herein by reference. This application claims priority of Chinese Patent Application No. 201330403682.7 filed on Aug. 14, 2013, the entire contents of which are hereby incorporated herein by reference.

BACKGROUND OF THE INVENTION

The present invention relates to mobile power technology and, more particularly, to a mobile power bank capable of charging electronic devices, jump starting an ignition system of a vehicle with a weak or dead battery, and operating as a flashlight.

A car needs high, instantaneous voltage current to achieve ignition start, usually provided by a car battery. However, when there is insufficient power from the car battery to start ignition, the traditional solution is to wait for a tow truck service to assist with jump starting the car battery. Waiting for a tow truck to arrive may cause substantial delay and inconvenience.

To solve this problem, there are traditional mobile jump starters that can be used to jump start a car battery by connecting cable clamps to the positive and negative posts of the car battery to start vehicle ignition. However, these traditional portable jump starters only have a single function and cannot meet the demand for multi-function mobile power. Moreover, often traditional portable jump starters are large and inconvenient to carry and store.

Accordingly, there is a need for an improved jump starter that remedies the shortcomings of the prior art and provides additional functionality.

SUMMARY OF THE INVENTION

The present invention according to an embodiment provides a mobile power bank, vehicle ignition system jump starter, and a flashlight. The mobile power bank is capable of jump starting a vehicle by providing power for a vehicle ignition and starter motor.

Accordingly, the present invention according to an embodiment is directed to an apparatus for providing power comprising: a housing; a battery module positioned inside of the housing, the battery module further comprising: a battery, a battery circuit board coupled to the battery and an ignition output port coupled to the battery circuit board. The apparatus further comprises a circuit board positioned inside of the housing and coupled to the battery module, the circuit board further comprising: a charge module; a discharge module; a lighting module; and a control module coupled to the charge module, the discharge module and the lighting module. The apparatus further comprises a light source coupled to the circuit board. The apparatus is configured to provide sufficient power to jump start a vehicle.

In an embodiment, the ignition output port outputs power at a voltage higher than about 13.6 volts. The ignition output port may further comprise a positive and negative barrel jack. The battery may comprise a lithium iron phosphate

battery cell or a lithium cobalt oxide battery cell. Optionally, the battery circuit board is configured to boost battery voltage output to the ignition output board to above about 13.6 volts.

The charge module may further comprises a constant current and constant voltage input circuit, an over-charge and over-voltage protection circuit, and a charging module power test circuit. Optionally, the discharge module further comprises a constant current and constant voltage output circuit, a discharge module over-discharge protection circuit, and a discharge module power test circuit. The lighting module may further comprise a lighting module over-discharge protection circuit and a lighting module power test circuit. The battery circuit board may be coupled to the circuit board by a ribbon cable.

In an embodiment, the apparatus further comprises a charging port coupled to the charging module, at least one Universal Serial Bus interface coupled to the discharge module, and a Light Emitting Diode indicator module coupled to the circuit board. The Light Emitting Diode indicator module is configured to indicate a charge level of the battery. Optionally, the charging port, the at least one Universal Serial Bus interface, Light Emitting Diode indicator module, and ignition output port are sequentially arranged on a side of the housing. The apparatus may further comprise two Universal Serial Bus interfaces, wherein the ignition output port is positioned adjacent to a first side of the charging port, and the two USB (Universal Serial Bus) interfaces are positioned adjacent to a second side of the charging port and the Light Emitting Diode indicator module is positioned in between the two Universal Serial Bus interfaces.

In an embodiment, the circuit board further comprises a master control button and the housing further comprises a button cap positioned adjacent the master control button such that operation of the button cap causes operation of the master control button. Optionally, the apparatus further comprises an external charging circuit adapter having a first end coupleable to the charging port and a second end coupleable to an external power supply. Optionally, the apparatus further comprises a vehicle ignition cable having a first end coupleable to the ignition output port and a second end coupleable to terminals of a vehicle battery. In an embodiment of the present invention, the apparatus is configured to be storable in a clothing pocket, carry bag, glove box or trunk of a vehicle.

In an additional embodiment, the present invention is directed to an apparatus for providing power comprising: a housing; a battery module positioned inside of the housing, the battery module having a battery with a lithium iron phosphate battery cell or a lithium cobalt oxide battery cell; a battery circuit board coupled to the battery; and an ignition output port coupled to the battery circuit board. A circuit board is positioned inside of the housing and coupled to the battery module, the circuit board further comprising: a charge module having a constant current and constant voltage input circuit, an over-charge and over-voltage protection circuit, and a charging module power test circuit; a discharge module having a constant current and constant voltage output circuit, a discharge module over-discharge protection circuit, and a discharge module power test circuit; a lighting module having a lighting module over-discharge protection circuit and a lighting module power test circuit; and a control module coupled to the charge module, the discharge module and the lighting module. The apparatus further comprises: a light source coupled to the circuit board; a charging port coupled to the charging module; at least one Universal Serial

Bus interface coupled to the discharge module; and a Light Emitting Diode indicator module coupled to the circuit board and configured to indicate a charge level of the battery; wherein the apparatus is configured to provide sufficient power to jump start a vehicle at a voltage higher than about 13.6 volts.

Optionally, the apparatus further comprises an external charging circuit adapter having a first end coupleable to the charging port and a second end coupleable to an external power supply. Optionally, the apparatus further comprises a vehicle ignition cable having a first end coupleable to the ignition output port and a second end coupleable to terminals of a vehicle battery. The apparatus may be configured to be storable in a clothing pocket. Optionally, the circuit board may include a battery voltage protection board and a voltage stabilizer board.

A mobile power bank according to an embodiment of the present invention provides mobile power for vehicle ignition starting, and also provides mobile power charging for electronic devices and functions as a flashlight to provide multifunctional mobile power needs. In addition, the mobile power control circuit board contains a variety of protection circuits that can effectively extend battery life and reduce battery damage.

BRIEF DESCRIPTION OF THE DRAWINGS

The features, aspects and advantages of the present invention will become better understood with regard to the following description, appended claims and accompanying figures wherein:

FIG. **1** is an outside perspective elevation view of a mobile power bank according to an embodiment of the present invention;

FIG. **2** is a perspective elevation view of a mobile power bank according to FIG. **1** with an upper cover removed;

FIG. **3** is a schematic circuit diagram of a circuit board usable in the mobile power bank of FIG. **1**, FIG. **3**A is a diagram of the battery module; FIG. **3**B is a side elevation view of a 110V external charging circuit adaptor; and FIG. **3**C is a side elevation view of a 12V DC external charging circuit adaptor;

FIG. **4** is a top view of the mobile power bank of FIG. **1**;

FIG. **5** is a bottom view of the mobile power bank of FIG. **1**;

FIG. **6** is a right side elevation view of the mobile power bank of FIG. **1**;

FIG. **7** is a left side elevation view of the mobile power bank of FIG. **1**;

FIG. **8** is a front elevation view of the mobile power bank of FIG. **1**; and

FIG. **9** is a rear elevation view of the mobile power bank of FIG. **1**;

DETAILED DESCRIPTION OF THE PREFERRED EMBODIMENTS

In the following description of the preferred embodiments, reference is made to the accompanying drawings which show by way of illustration specific embodiments in which the invention may be practiced. Wherever possible, the same reference numbers will be used throughout the drawings to refer to the same or like parts. It is to be understood that other embodiments may be utilized and structural and functional changes may be made without departing from the scope of the present invention.

A mobile power bank **10** according to an embodiment of the present invention is shown in FIGS. **1** to **9**. The mobile power bank **10** functions as a mobile power bank, vehicle battery jump starter, and a flashlight. The mobile power bank **10** may be used to start a vehicle. If the vehicle battery power is low, the mobile power bank **10** can be used to jump start the ignition.

The mobile power bank **10** includes a housing **12**, a control circuit board **14**, and a battery module **16**. The housing **12** comprises an upper cover **18** and a base cover **20**. The upper cover **18** is coupled to the base cover **20** to form an enclosed, storage space. The control circuit board **14** and the battery module **16** may be accommodated and fixed inside the storage space.

The control circuit board **14** is mounted on an inner surface of the base cover **20**. The base cover **20** has a first plate **22** perpendicular to the base cover. An edge of the first plate **22** is connected to a second plate **24**. The first plate **22** and the second plate **24** may be connected to each other via printed designated lines on the control circuit board **14**. Both the first plate **22** and the second plate **24** can be further mounted to the base cover **20**.

The second plate **24** may be provided with a master control button **26** and a flashlight **28**. The flashlight **28** and the master control button **26** may be positioned on opposite surfaces of the second plate **24**. Preferably, the flashlight **28** is placed adjacent to an edge of the base cover **20**. In an embodiment, the master control button **26** is operable in a direction parallel to the second plate **24**. The upper cover **18** is provided with a button cap **30** in the corresponding position of the master control button **26**. The button cap **30** may be operated by a user to press the master control button **26**.

The first plate **22** may be provided with a LED (Light Emitting Diode) indicator module **32**, a charging port **34**, and a USB (Universal Serial Bus) output module **36**. The LED indicator module **32**, the charging port **34**, and the USB output module **36** may be provided in the body of the first plate **22**, on the same side and near an edge of the base cover **20**. The USB output module **36** may include two USB interfaces, a first USB interface **38** and a second USB interface **40**.

The first USB interface **38**, the LED indicator module **32**, the second USB interface **40**, and the charging port **34** may be sequentially arranged. The LED indicator module **32** may include a plurality of LED's. In an embodiment, the LED indicator module **32** has five LED's in the control circuit board **14**, to indicate the available power and the charging status of the battery module **16**.

The charging port **34** may be an AC or DC charging port and is connectable to an external charging circuit adaptor for charging the battery module **16**. The charging port **34** may be connected to a 110V AC adaptor or a 12V DC adaptor to charge the battery. In an embodiment, the mobile power bank of the present invention is provided in a kit with the external charging circuit adapter.

The USB output module **36** is connectable via a USB cable to support USB charging of electronic devices where the battery module **16** provides power to the electronic devices. For example, certain mobile phone products, including the iPhone® by Apple Computer®, certain electronic book reader products, such as the Kindle® by Amazon®, certain tablet computer products, such as the iPad® by Apple Computer®, digital cameras, portable gaming systems, portable music players, portable global positioning

systems (GPS) and wireless headphones may be charged using a USB cable connectable to the USB output module **36**.

In an embodiment, the battery module **16** is provided on the surface of the control circuit board **14** and electrically connected to the control circuit board **14**. In an embodiment, the battery module **16** includes battery cells **42**, a battery circuit board **44**, an ignition output port **46**, and a connecting ribbon cable **48**. The battery cell **42** may have a multi-cell structure. In an embodiment of the present invention, the battery cell **42** has four battery cells.

In an embodiment of the present invention, the battery cell **42** is a lithium iron phosphate cell. In an additional embodiment, the battery cell **42** is a lithium cobalt oxide cell. Preferably, the output of the ignition output port's voltage is higher than about 13.6V. The voltage of the vehicle battery is generally less than about 13.6V and the output voltage of the ignition output port **46** is higher than 13.6V. The voltage differential can effectively prevent voltage reverse charging from the vehicle battery to the device **10** upon vehicle ignition start; thereby preventing reverse charging of the battery cell **42**. Thus, the voltage differential protects the battery cell **42** and extends the life of the battery module **16**. Lithium iron phosphate and lithium cobalt oxide battery cells have a large discharge capacity and may provide an output voltage higher than about 13.6V.

In additional embodiments, the battery cell **42** is a nickel-cadmium (NiCd) or nickel metal Hydride (NiMH) cell. The battery cell **42** may be made from other rechargeable materials that provide sufficient energy density as will be understood by those of skill in the art. The battery circuit board **44** may be provided with voltage boosting circuitry to step up the output voltage from the battery cell **42** to the ignition output port **46** to provide an output voltage higher than about 13.6V. As discussed above, output voltage higher than about 13.6V prevents reverse charging of the battery module **16** and thereby protects the battery cell **42** and extends the life of the battery module **16**.

The battery circuit board **44** may be directly electrically connected to the battery cell **42**. Additionally, the battery cell **42** may be connected to the control circuit board **14** by a ribbon cable **48**. The ignition output port **46** may be coupled to an edge of the battery circuit board **44**, and the ignition output port **46** may extend to a right edge of the base cover **20**. The ignition output port **46** may be oriented parallel to the LED indicator module **32**, the charging port **34** and the USB output module **36**. The ignition output port **46** uses power stored in the battery cell **42** to provide power to start a vehicle engine ignition.

The output of the battery cell **42** is provided to the vehicle's ignition via a vehicle ignition cable (not shown) coupleable to the ignition output port **46**. In an embodiment, the vehicle ignition cable has a first end with a connector configured to fit into the ignition output port **46** and a second end with positive and negative connectors, such as clamps or clips, that are connectable to vehicle battery terminals. The output port **46** may be a positive and negative barrel socket. In an embodiment, the mobile power bank of the present invention is provided in a kit with the vehicle ignition cable.

Once connected to a vehicle battery, when the user attempts to start the vehicle, an electrical current is passed from the battery module **16**, through the output port **46**, ignition cable and through the vehicle battery to the electrical system of the vehicle, thereby providing a high voltage current to start the vehicle. Once the vehicle is started, within a short time (such as a minute), the user of the vehicle may unplug the vehicle ignition cable from the vehicle battery.

Referring to FIG. **3**, the control circuit board **14** may include a charging module **52**, a discharge module **54**, a lighting module **56**, and a control module **58**. The control module **58** may have a main control chip, and the control module can be connected to the charging module **52**, the discharge module **54**, the lighting module **56**, the LED indicator module **32** and the master control button **26**.

The charging module **52** is connected to the charging port **34**, which may include a constant current and constant voltage input circuit **60**, an over-charge and over-voltage protection circuit **62**, and a charging module power test circuit **64**. The constant current and constant voltage input circuit **60** provides a constant current and constant voltage to charge the battery module **16**, extend battery life, and reduce battery damage. The overcharge and overvoltage protection circuit **62** protects the battery module **16** during power charging from the charging port **34** by preventing damage from charging current or charging voltage that is too high. The charging module power test circuit **64** detects a state of battery charge, such as by detecting an output voltage of the battery cell **42** during charging.

The discharge module **54** is connected to the USB (Universal Serial Bus) output module **36**. In an embodiment, the discharge module **54** includes a constant current and constant voltage output circuit **66**, a discharge module over-discharge protection circuit **68**, and a discharge module power test circuit **70**. The constant current and constant voltage output circuit **66** is coupled to the USB output module **36**, so that the first USB interface **38** and the second USB interface **40** maintain a constant charging current and constant voltage.

The discharge module over-discharge protection circuit **68** is used when the battery module **16** is supplying energy via the USB output module **36**. The discharge module over-discharge protection circuit **68** prevents damage to the battery module and an external device charging via the USB output module **36** when the battery module's power output is below a predetermined threshold. The discharge module power test circuit **70** determines the discharge capacity of the battery module **16**, such as by for example testing the output voltage of the battery cell **42**.

The lighting module **56** is connected to the flashlight **28**. In an embodiment, the lighting module **56** includes a lighting module over-discharge protection circuit **72** and a lighting module power test circuit **74**. The lighting module over-discharge protection circuit **72** limits discharge of the battery module **16** to the flashlight **28** when the battery power output to the flashlight is below a predetermined threshold to protect the battery module and the flashlight. The lighting module power test circuit **74** detects the battery module's power levels during illumination of the flashlight **28**.

It should be understood that the charging module **52**, the discharge module **54**, and the lighting module **56**, as functional modules referenced above, are divided circuit functions. In other embodiments, the charging module power test circuit **64**, discharge module power test circuit **70** and the lighting module power test circuit **74** may be integrated into a single power test circuit. In addition, the discharge module over-discharge protection circuit **68** and the lighting module over-discharge protection circuit **72** may also be integrated into a single over-discharge protection circuit. In an additional embodiment of the present invention, the control module **58** of the control circuit board **14** controls the power

instructions of the charging module **52**, the discharge module **54**, the lighting module **56** and the LED indicator module **32**.

An example operation of the control module **58** in combination with the charging module **52** and the LED indicator module **32** will now be described. When the mobile power bank **10** is connected to an external power source for charging the battery module **16** via the charging port **34** and is in a charged state, the power test circuit **64** detects the battery capacity of the battery module **16** and activates the LED indicator module **32** for a battery charging indicator.

For example, when the power test circuit **64** detects battery voltage of the battery module **16** is lower than about 10.8V, the control module **58** may control the LED indicator module **32** to stop all LED's from lighting up. When the detected battery voltage is greater than about 12.6V, the control module **58** may control the LED indicator module **32** so that one LED is lit and another LED is flashing. When the detected battery voltage is greater than about 13V, the control module **58** may control the LED indicator module **32** so that two LED's are lit and another LED is flashing.

When the battery voltage is greater than about 13.2V, the control module **58** may control the LED indicator module **32** so that three LED's are lit and another LED is flashing. When the battery voltage is greater than about 13.3V, the control module **58** may control the LED indicator module **32** so that four LED's are lit and another LED is flashing. When the battery voltage is equal to or greater than about 13.4V, the control module **58** may control the LED indicator module **32** so that all five LED are lit. As will be understood by one of skill in the art, the number of LED's controlled by the LED module **32** and battery charge indications may be varied.

An example operation of the control module **58** in combination with the discharge module **54** and the LED indicator module **32** will now be described. When the control module **58** detects that the master control button **26** has been operated, the control module detects the amount of output power load. If there is no power load detected (if the power load current is less than about 30 mA to about 40 mA, then no power load is considered to be connected), then the control module can control the LED indicator module **32** to not light up, indicating there is no power being output.

If the discharge module power test circuit **70** indicates there is no power load when the battery voltage of the battery module **16** is lower than about 10.8V, then the control module **58** may control the LED module **32** so that one LED is flashing; when the detected battery voltage is greater than about 12.6V, the control module can control the LED module so that one LED is lit; when the detected battery voltage is greater than about 13V, the control module may control the LED module so that two LED's are lit; when the detected battery voltage is greater than about 13.2V, the control module may control the LED module so that three LED's are lit; when the detected battery voltage is greater than about 13.3V, the control module may control the LED module so that four LED's are lit; when the detected battery voltage is equal to or greater than about 13.4V, the control module can control the LED module so that all five LED's are lit.

If the master control button **26** is activated, and the control module **58** detects that the a power load is connected (for example, if a greater than 50 A power load current is detected, then a power load is considered to be connected), then the control module **58** may turn on the discharge module power test circuit **70** and the LED indicator module **32** to activate the discharged battery indicator. Specifically, when the detected voltage of the battery module **16** is equal to or lower than about 10.8V, the control module **58** may control the LED module **32** so that one LED is flashing; when the detected battery voltage is greater than about 12.6V, the control module can control the LED module **32** so that one LED is lit; when the detected battery voltage is greater than about 13V, the control module may control the LED module **32** so that two LED's are lit; when the detected battery voltage is greater than about 13.2V, the control module can control the LED module **32** so that three LED's are lit; when the detected battery voltage is greater than about 13.3V, the control module may control the LED module **32** so that four LEDs are lit; when the detected battery voltage is equal to or greater than about 13.4V, the control module can control the LED module **32** so that all five LED's are lit.

As will be understood by one of skill in the art, the power bank system **10** may have a plurality of LED indicator modules. For example, there may be a first LED indicator module for indicating battery charge level and a second LED indicator module for indicating power output level. The plurality of LED indicator modules may be controlled by the control module **58** or by separate modules, such as the power charging module **52** and the discharge module **54**.

In addition, when the control module **58** detects that there is no power load connected, it can at a preset time (e.g. 10 seconds) turn off the control voltage output and enter a power-down mode. If the control module **58** detects that there is a power load connected, the control module will turn on the voltage output control circuit **66** to send out continuous voltage output. If the voltage current of the battery module **16** is lower than about 10.8V, then the control module **58** may turn off the output voltage.

When the control module **58** detects that the master control button **26** is activated for an extended period of time, such as about 2 seconds, the control module can turn on the lighting module **56** to illuminate the flashlight **28**. After turning on the flashlight **28**, if the control module **58** detects that the master control button **26** is activated, it may control the flashlight in multiple illumination modes, such as a constant light mode, flashing strobe light mode, and flashing S.O.S. (three sequential short flashes, followed by three sequential long flashes, followed again by three sequential short flashes) signal light mode. If, after flashlight activation, the master control button **26** is pressed for an extended period of time, such as about 2 seconds, the control module **58** may control the lighting module **56** to turn off the flashlight **28**.

In an embodiment, sidewalls of the upper cover **18** have openings adjacent to the flashlight **28**, the charging port **34**, the USB interfaces **38**, **40**, the LED indicator module **32**, and the ignition output port **46**. The openings allow the flashlight **28** and LED indication lights of the LED indicator module **32** to emit light outside of the housing **12** and allow external devices and adaptors access to the charging port **34**, the USB interfaces **38**, **40** and the ignition output port **46**.

The present invention provides a mobile power bank **10** that is not only capable of providing enough power to start a vehicle ignition, but also charges electronic devices and provides a flashlight function, so it can meet multifunctional mobile power needs. The mobile power bank's mobile control circuit board **14** with a variety of protection circuits, such as over-discharge protection circuit, overcharge and overvoltage protection circuits, a constant current and constant voltage input circuits, a constant current and constant voltage output circuits, can effectively extend battery life and reduce battery damage.

Importantly, the mobile power bank system **10** of the present invention is portable enough to be easily carried by a user. In an embodiment of the present invention, the mobile power bank system **10** is small enough to be carried in a pocket by a user. Alternatively, the mobile power bank system **10** may be configured for placement in a vehicle glove box or vehicle door compartment for easy storage and access by a user in case of emergency.

There is disclosed in the above description and the drawings, a medical camera system which fully and effectively overcomes the disadvantages associated with the prior art. However, it will be apparent that variations and modifications of the disclosed embodiments may be made without departing from the principles of the invention. The presentation of the preferred embodiments herein is offered by way of example only and not limitation, with a true scope and spirit of the invention being indicated by the following claims.

Any element in a claim that does not explicitly state "means" for performing a specified function or "step" for performing a specified function, should not be interpreted as a "means" or "step" clause as specified in 35 U.S.C. §112.

What is claimed is:

1. A portable apparatus, easily carried by a user, for providing power comprising:

a housing;

a battery module positioned inside of the housing, the battery module further comprising:

a battery;

a battery circuit board coupled to the battery; and

an ignition output port coupled to the battery circuit board;

a circuit board positioned inside of the housing and coupled to the battery module, the circuit board comprising:

a charge module;

a discharge module;

a lighting module; and

a control module coupled to the charge module, the discharge module and the lighting module;

a light source coupled to the circuit board;

a charging port coupled to the charge module;

at least one Universal Serial Bus interface coupled to the discharge module;

a Light Emitting Diode indicator module coupled to the circuit board; and

wherein the apparatus is configured to provide sufficient power to jump start a vehicle.

2. The apparatus of claim **1** wherein the battery module outputs power through the ignition output port at a voltage higher than 10.8 volts to 13.6 volts.

3. The apparatus of claim **2** wherein the ignition output port further comprises a positive and negative barrel jack, which connect to the vehicle ignition jumper cable.

4. The apparatus of claim **3** wherein the battery further comprises at least one of the group consisting of: a lithium iron phosphate battery cell and a lithium cobalt oxide battery cell.

5. The apparatus of claim **4** wherein the battery circuit board is configured to boost battery voltage output to the ignition output port to higher than 10.8 volts to 13.6 volts.

6. The apparatus of claim **1** wherein the charge module further comprises a constant current and constant voltage input circuit, an over-charge and over-voltage protection circuit, and charging module power test circuit.

7. The apparatus of claim **1** wherein the discharge module further comprises a constant current and constant voltage output circuit, a discharge module over-discharge protection circuit, and a discharge module power test circuit.

8. The apparatus of claim **1** wherein the lighting module further comprises a lighting module over-discharge protection circuit and a lighting module power test circuit.

9. The apparatus of claim **1** wherein the battery circuit board is coupled to the circuit board by a ribbon cable.

10. The apparatus of claim **1** wherein the Light Emitting Diode indicator module is configured to indicate a charge level of the battery module.

11. The apparatus of claim **1** wherein the charging port, the at least one Universal Serial Bus interface, Light Emitting Diode indicator module, and ignition output port are sequentially arranged on a side of the housing.

12. The apparatus of claim **11**, further comprising two Universal Serial Bus interfaces, wherein the ignition output port is positioned adjacent to a first side of the charging port, and the two USB (Universal Serial Bus) interfaces are positioned adjacent to a second side of the charging port and the Light Emitting Diode indicator module is positioned in between the two Universal Serial Bus interfaces.

13. The apparatus of claim **12** wherein the circuit board further comprises a master control button and the housing further comprises a button cap positioned adjacent the master control button such that operation of the button cap causes operation of the master control button.

14. The apparatus of claim **1** further comprising an external charging circuit adapter having a first end coupleable to the charging port and a second end coupleable to an external power supply.

15. The apparatus of claim **1** further comprising a vehicle ignition cable having a first end coupleable to the ignition output port and a second end coupleable to terminals of a vehicle battery.

16. The apparatus of claim **1** wherein the apparatus is configured to be storable in a clothing pocket.

17. A portable apparatus, easily carried by a user, for providing power comprising:

a housing containing therein the following;

a battery module positioned inside of the housing, the battery module comprising:

a battery comprising one of the group consisting of: a lithium ironphosphate battery cell and a lithium cobalt oxide battery cell;

a battery circuit board coupled to the battery; and

an ignition output port coupled to the battery circuit board;

a circuit board positioned inside of the housing coupled to the battery module, the circuit board comprising:

a charge module having a constant current and constant voltage input circuit; an over-charge and over-voltage protection circuit; and a charging module power test circuit;

a discharge module having a constant current and constant voltage output circuit;

a discharge module over-discharge protection circuit; and a discharge module power test circuit;

a lighting module having a lighting module over-discharge protection circuit; and a lighting module power test circuit;

a control module coupled to the charge module, the discharge module and the lighting module;

a light source coupled to the circuit board;

a charging port coupled to the charging module;

at least one Universal Serial Bus interface coupled to the discharge module; and

a Light Emitting Diode indicator module coupled to the circuit board and configured to indicate a charge level of the battery;

wherein the apparatus is configured to provide sufficient power to jump start a vehicle at a voltage range of 10.8 volts to 13.6 volts.

18. The apparatus of claim **17** further comprising an external charging circuit adapter having a first end coupleable to the charging port and a second end coupleable to an external power supply.

19. The apparatus of claim **17** further comprising a vehicle ignition cable having a first end coupleable to the ignition output port and a second end coupleable to terminals of a vehicle battery.

20. The apparatus of claim **17** wherein the apparatus is configured to be storable in a clothing pocket.

21. A mobile power bank comprising a housing, a control circuit board, and a battery module;

the housing comprising an upper cover and a base cover, the upper cover coupled to the base cover to form an enclosed storage space;

the control circuit and the battery module fixed inside the storage space;

the base cover having a first plate perpendicular to the base cover, an edge of the first plate connected to a second plate, both plates mounted to the base cover;

a master control button and a flashlight positioned on the second plate;

the flashlight placed adjacent an edge of the base cover;

the master control button placed in a direction parallel to the second plate;

the upper cover having a button cap which is operated to press the master control button;

the first plate having an LED indicator module, a charging port and a USB output module, all located in the body of the first plate, on the same side, near an edge of the base cover, the USB output module having one or more USB interfaces.

22. The mobile power bank of claim **21** in which there are two USB interfaces, the first USB interface, the LED indicator module, the second USB interface and the charging port which are sequentially arranged.

23. The mobile power bank of claim **22** in which the charging port is connectable to an external charging circuit adaptor to charge the battery module.

24. The mobile power bank of claim **21** in which the entire mobile power bank is located in a kit along with external charging adapters and jumper cables.

25. The mobile power bank of claim **24** in which the charging adaptors comprise a 110V AC adaptor and a 12V DC adaptor to charge the battery module and one or more USB cables to charge external electronic devices.

* * * * *