Trials@uspto.gov
571-272-7822

Paper 7
Dated: August 29, 2024

UNITED STATES PATENT AND TRADEMARK OFFICE

BEFORE THE PATENT TRIAL AND APPEAL BOARD

ADC SOLUTIONS AUTO LLC,
Petitioner,

v.

THE NOCO COMPANY,
Patent Owner.

IPR2024-00671
Patent 11,584,243 B2

Before DAVID C. MCKONE, AVELYN M. ROSS, and
JASON M. REPKO, *Administrative Patent Judges.*

ROSS, *Administrative Patent Judge*.

DECISION
Granting Institution of *Inter Partes* Review
35 U.S.C. § 314

I. INTRODUCTION

ADC Solutions Auto LLC ("Petitioner") filed a Petition (Paper 1, "Pet.") requesting an *inter partes* review of claims 1, 2, 15, 17, 18, 51, 54, and 57 (Pet. 7) of U.S. Patent No. 11,584,243 B2 (Ex. 1001, "the '243 patent"). The NOCO Company ("Patent Owner") filed a Preliminary Response to the Petition. Paper 6 ("Prelim. Resp.").

We have authority to determine whether to institute an *inter partes* review. 35 U.S.C. § 314 (2018); 37 C.F.R. § 42.4(a). The standard for instituting an *inter partes* review is set forth in 35 U.S.C. § 314(a), which provides that an *inter partes* review may not be instituted "unless the Director determines . . . there is a reasonable likelihood that the petitioner would prevail with respect to at least [one] of the claims challenged in the petition."

For the reasons set forth below, upon considering the Petition and Preliminary Response, we determine that Petitioner has established a reasonable likelihood of prevailing with respect to at least one challenged claim. Accordingly, we grant the Petition and institute an *inter partes* review.

A. Real Parties-in-Interest

Petitioner identifies "ADC Solutions Auto LLC" as the sole real party-in-interest. Pet. 1.

Patent Owner identifies "The Noco Company" as the real party-in-interest. Paper 3 (Mandatory Notice), 1.

B. Related Proceedings

Petitioner identifies the following actions as related proceedings:

U.S. Patent No. 11,447,243 ("the '243 patent") is presently asserted in the litigation proceedings bulleted below.

- Actions in which ADC is a party:
  - *The NOCO Company v. Winplus North America Inc. et al.*, Case No. 8:23-cv-00269 (C.D. Cal.); and
  - *Certain Portable Battery Jump Starters and Components Thereof (II)*, Inv. No. 337-TA-1359 (U.S. International Trade Commission) ("ITC Action").
- Actions in which ADC is not a party:
  - *The NOCO Company v. Shenzhen Carku Technology Co., Ltd.*, Case No. 1:23-cv-00911 (N.D. Ill.);
  - *The NOCO Company v. Hulkman LLC et al.*, Case No. 3:23-cv-00642 (N.D. Cal.);
  - *The NOCO Company v. Youxiangongsi*, Case No. 4:23-cv-00554 (S.D. Tex.); and
  - *The NOCO Company v. Deltona Transformer Corporation et al.*, Case No. 6:23-cv-02194 (M.D. Fla.).

Pet. 2–3. Petitioner also identifies a related *inter partes* review: "On February 15, 2024, Petitioner filed a petition requesting *inter partes* review of U.S. Patent No. 11,447,023 ('the '023 patent'), which shares a patent family with the '243 patent." Pet. 3; *see* IPR2024-00577. Petitioner also states that the '243 patent "stems from a line of continuation applications claiming priority back to . . . U.S. Patent No. 9,007,015 (EX1013)" and that "[a]ll claims of the '015 patent were challenged in *inter partes* review, IPR2020-00944, which resulted in a Final Written Decision ('the '015-FWD') finding all claims, except claim 11, unpatentable." Pet.

10–11 (citing Ex. 1001, 60; Ex. 1003, ¶¶ 28–29; Ex. 1014). The Federal Circuit affirmed the '015-FWD." *Id.* (citing Ex. 1015).

Patent Owner likewise identifies each and only the above actions as related proceedings. Paper 3 (Mandatory Notice). Patent Owner likewise identifies the above actions 8:23-cv-00269 and 337-TA-1359 as the only actions "[t]he '243 Patent is presently the subject of . . . [and] in which Petitioner ADC Solutions Auto LLC is a party." Paper 3. Patent Owner identifies the *inter partes* review of the '243 patent. Paper 3.

C. The '243 patent (Ex. 1001)

The '243 patent, titled "jump starting device with USB," issued on February 21, 2023. *Id.* codes (45), (54). The "invention relates generally to apparatus for jump-starting a vehicle having a depleted or discharged battery." *Id.* at 1:5–7.

The '243 patent discloses a "handheld battery booster according to one aspect of the invention." *Id.* at 4:14–15. "At the heart of the handheld battery booster is a lithium polymer battery pack 32, which stores sufficient energy to jump start a vehicle engine served by a conventional 12 volt lead-acid or valve regulated lead-acid battery." *Id.* 4:15–19. Figure 3 reproduced below, depicts an exemplary handheld battery booster device. *Id.* at 7:49–50.

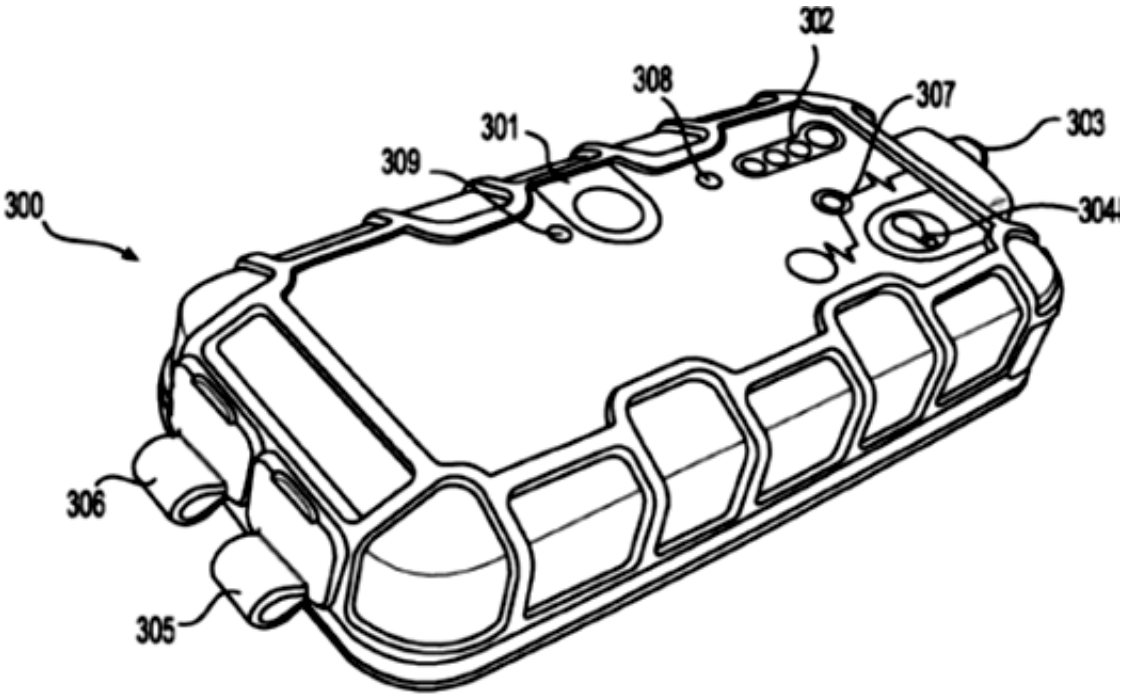

FIG. 3

Figure 3 "is a perspective view of a handheld jump starter booster device in accordance with one embodiment of the invention." *Id.* at 4:4–6. Figure 3 illustrates the following: power on switch 301; LED 'fuel gauge' indicators 302; 12 volt output port 303 connectable to cable device 400; flashlight control switch 304 for activating flashlight LEDs; USB input port 305 for charging the internal lithium battery; USB output port 306 for providing charge from the lithium battery to other portable devices such smartphones; 'boost on' indicator 307 showing that power is being provided to 12 volt output port 303; 'reverse' indicator 308 showing that the vehicle battery is improperly connected with respect to polarity; 'power on' indicator 309 showing that device 300 is powered up for operation. *Id.* at 7:49–63.

Figure 4, reproduced below, depicts jumper cables useful for the handheld jump starter shown in Figure 3. *Id.* at 7:64–65.

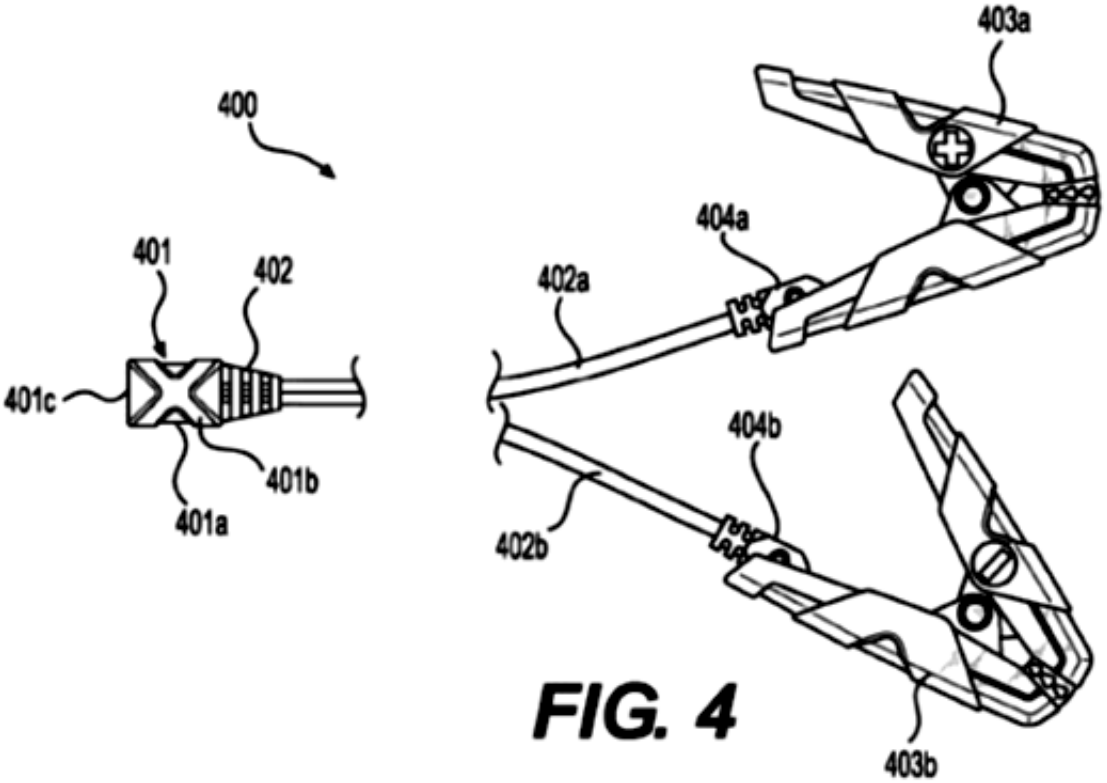

FIG. 4

Figure 4 "is a plan view of a jumper cable." *Id.* at 4:7–9. Figure 4 illustrates the following: plug 401 configured to plug into 12 volt output port 303 of handheld device 300; a pair of cables 402a, 402b integrated with plug 401 (having body 401a, surface protrusion 401b, and flat end 401c) and respectively connected to positive and negative polarity battery terminal clamps 403a, 403b via ring terminals 404a, 404b. *Id.* at 7:64–8:3. Handheld booster device 300 is connected to a vehicle battery by connecting plug 401 into output port 303 and connecting battery clamps 403a, 403b to respective terminals of the battery. *Id.* at 8:3–10.

Figure 1, reproduced below, illustrates an exemplary embodiment.

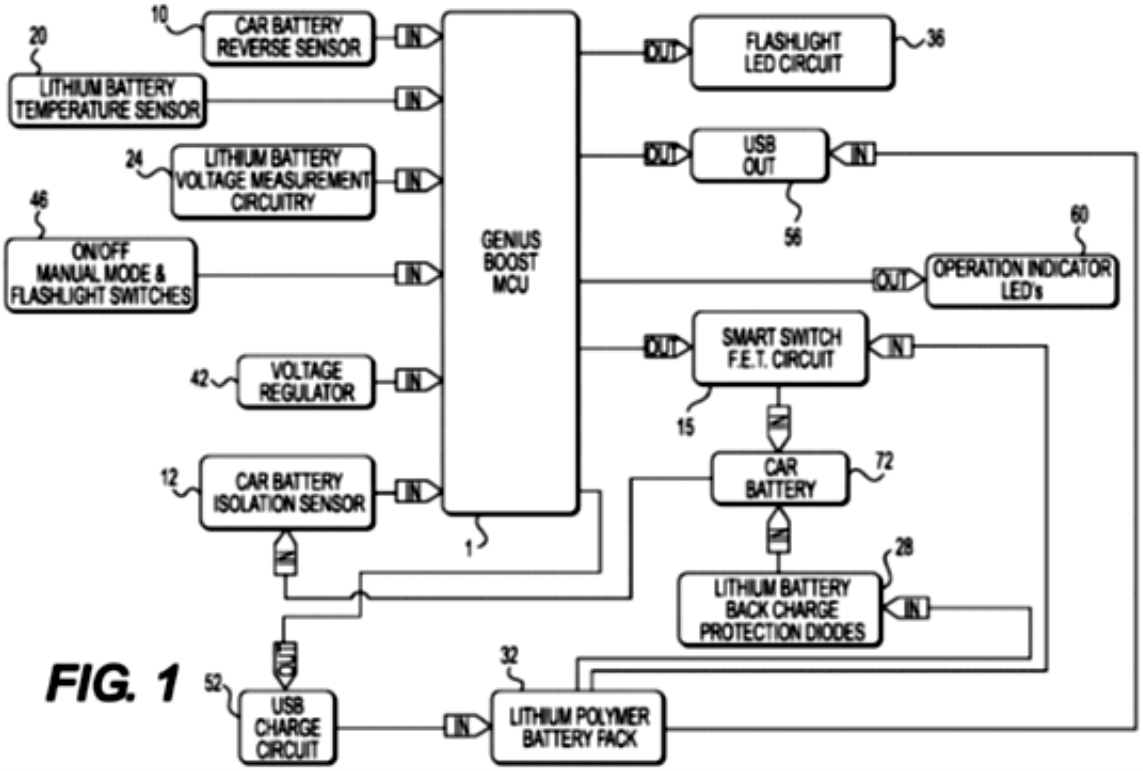

FIG. 1

Figure 1 "is a functional block diagram of a handheld battery booster according to one aspect of the invention." *Id.* at 4:14–15. Programmable microcontroller unit (MCU) 1 receives inputs and produces outputs to read and control the remaining elements. *Id.* at 4:27–29. Car battery reverse sensor 10 detects, and informs MCU 1, whether the negative and positive terminals of booster device 300 are respectively and thus correctly connected to negative and positive terminals of the vehicle battery 72. *Id.* at 4:37–43.

USB charge circuit 52 converts power from "any USB charger power source, charge voltage[,] and current" to the power that charges the lithium battery pack 32. *Id.* at 5:24–26. In a specific example of Figure 2C, the USB charge circuit 52 converts power of "a standard USB charger" to the charging power. *Id.* at 7:32–33. The input of the charge circuit 52 is a "standard micro-USB connector 48 allowing standard cables to be used." *Id.*

at 7:34–35. "The 5V potential provided from standard USB chargers is up-converted to the 12.4 VDC voltage required for charging the internal lithium battery pack using a DC-DC converter 49." *Id.* at 7:35–38.

D. Illustrative Claim

Petitioner challenges claims 1, 2, 15, 17, 18, 51, 54, and 57 of the '243 patent. Independent claim 1 is representative of the challenged claims and is reproduced below with Petitioner's annotations:[1]

> 1. [Preamble] A jump starting device for boosting or charging a depleted or discharged battery having a positive battery terminal and a negative battery terminal, the jump starting device comprising:
>
> [1(a)] a power supply;
>
> [1(b)] a positive battery connector for electrically connecting the jump starting device to the positive battery terminal of the depleted or discharged battery;
>
> [1(c)] a negative battery connector for electrically connecting the jump starting device to the negative battery terminal of the depleted or discharged battery;
>
> [1(d)] a power switch or switch circuit connected in circuit with the power supply and the positive and negative battery connectors,
>
> [1(e)] the power switch or switch circuit configured to switch power on from the power supply to boost or charge the depleted or discharged battery when connected between the positive and negative battery connectors;
>
> [1(f)] a USB input connector; and
>
> [1(g)] a USB charge circuit electrically connecting the USB input connector to the power supply, the USB charge circuit

[1] For convenience, we adopt Petitioner's annotated claim format.

> comprising a DC-DC converter configured to upconvert voltage from the USB input connector to the power supply.

Ex. 1001, 8:24–47.

E. The Asserted Unpatentability Challenges

Petitioner asserts that claims 1, 2, 15, 17, 18, 51, 54, and 57 would have been unpatentable based on the following grounds:

Claim(s) Challenged	35 U.S.C. §[2]	Reference(s)/Basis
1, 2	103	Richardson,[3] Zhao[4]
15, 17, 18, 51, 54, 57	103	Richardson, Zhao, Dao[5]
1, 2, 15, 17, 18, 57	103	Yu,[6] Paparrizos[7]
15, 17, 18, 51, 54, 57	103	Yu, Paparrizos, Dao

Pet. 8. Petitioner also relies on declaration testimony of C. Arthur MacCarley. Ex. 1003 (the "MacCarley Declaration").

[2] The Leahy-Smith America Invents Act ("AIA"), Pub. L. No. 112-29, 125 Stat. 284 (2011), amended 35 U.S.C. § 103, effective March 16, 2013. Because the application from which the '243 patent issued was filed after this date, the AIA version of § 103 applies.

[3] US 2013/0154543 A1, published June 20, 2013 (Ex. 1005, "Richardson").

[4] US 9,391,467 B2, issued July 12, 2016 (Ex. 1006, "Zhao").

[5] US 2013/0241488 A1, published September 19, 2013 (Ex. 1031, "Dao")

[6] CN 203211234U, September 25, 2013 (Ex. 1008 (certified English translation), "Yu").

[7] US 9,219,372 B2, December 22, 2015 (Ex. 1009, "Paparrizos").

II. ANALYSIS

A. Principles of Law

In an *inter partes* review, "the petitioner has the burden from the onset to show with particularity why the patent it challenges is unpatentable." *Harmonic Inc. v. Avid Tech., Inc.*, 815 F.3d 1356, 1363 (Fed. Cir. 2016) (citing 35 U.S.C. § 312(a)(3) (2012) (requiring *inter partes* review petitions to identify "with particularity . . . the evidence that supports the grounds for the challenge to each claim")). This burden of persuasion never shifts to the patent owner. *See Dynamic Drinkware, LLC v. Nat'l Graphics, Inc.*, 800 F.3d 1375, 1378 (Fed. Cir. 2015) (discussing the burden of proof in *inter partes* review).

Obviousness is a question of law based on underlying determinations of fact. *Graham v. John Deere Co.*, 383 U.S. 1, 17 (1966); *Richardson-Vicks, Inc. v. Upjohn Co.*, 122 F.3d 1476, 1479 (Fed. Cir. 1997). A claim is unpatentable as obvious, under 35 U.S.C. § 103, if the differences between the claimed invention and the prior art are such that the claimed invention, as a whole, would have been obvious to a person having ordinary skill in the art, before the effective filing date of the claimed invention. *KSR Int'l Co. v. Teleflex Inc.*, 550 U.S. 398, 406 (2007). The question of obviousness is resolved on the basis of underlying factual determinations including (1) the scope and content of the prior art; (2) any differences between the claimed subject matter and the prior art; (3) the level of ordinary skill in the art; and (4) objective evidence of nonobviousness. *Graham*, 383 U.S. at 17–18. Consideration of the *Graham* factors "helps inform the ultimate obviousness determination." *Apple Inc. v. Samsung Elecs. Co.*, 839 F.3d 1034, 1048 (Fed. Cir. 2016) (en banc), *cert. denied*, 138 S. Ct. 420

(2017). "Obviousness does not require absolute predictability of success[;] . . . all that is required is a reasonable expectation of success." *In re O'Farrell*, 853 F.2d 894, 903–04 (Fed. Cir. 1988) (citations omitted). But, a petitioner cannot satisfy its burden of proving obviousness by employing "mere conclusory statements." *In re Magnum Oil Tools Int'l, Ltd.*, 829 F.3d 1364, 1380 (Fed. Cir. 2016).

We analyze the challenges presented in the Petition in accordance with the above-stated principles.

B. Level of Ordinary Skill in the Art

We review the grounds of unpatentability in view of the understanding of a person of ordinary skill in the art before the effective filing date of the claimed invention. *Graham*, 383 U.S. at 17.

Petitioner contends that a person of ordinary skill in the art, "as of the claimed priority date of July 3, 2014, would have been a person with at least a bachelor's degree in electrical engineering or its equivalent and at least two years of experience in the field of electrical engineering including some experience with DC power supply or battery charger design[;] . . . [l]ess work experience could be compensated for by a higher level of education, such as a master's degree, and vice versa." Pet. 17–18 (citing Ex. 1003 ¶¶ 41–44; Ex. 1014 at 10–11). Patent Owner "does not propose a different level of skill in the art[.]" Prelim. Resp. 25.

In light of the record before us, and for purposes of this Decision, we adopt Petitioner's proposal regarding the level of ordinary skill in the art. Based on our review of the '243 patent and the prior art of record, we determine that the definition offered by Petitioner comports with the qualifications a person would have needed to understand the '243 patent and

the prior art. We will make any final determination pertaining to the level of ordinary skill in the art, however, on the full trial record.

C. Claim Construction

We construe claim terms according to the standard set forth in *Phillips v. AWH Corp.*, 415 F.3d 1303, 1312–17 (Fed. Cir. 2005) (en banc); 37 C.F.R. § 42.100(b). Under *Phillips*, we give claim terms "their ordinary and customary meaning." *Phillips*, 415 F.3d at 1312. "[T]he ordinary and customary meaning of a claim term is the meaning that the term would have to a person of ordinary skill in the art in question at the time of the invention." *Id.* at 1313. "Importantly, the person of ordinary skill in the art is deemed to read the claim term not only in the context of the particular claim in which the disputed term appears, but in the context of the entire patent, including the specification." *Id.*

"Petitioner submits there are no formal claim constructions necessary in this proceeding[.]" Pet. 18. Patent Owner responds that "denial of institution [does] not require addressing the construction of claim terms." Prelim. Resp. 24. Patent Owner also notes that "during the related ITC investigation[, Petitioner] proposed a specific construction for 'USB input circuit that excludes USB input circuits having bidirectional capabilities . . . [and is] contrary to the Petition's interpretation of Paparrizos as teaching a USB input circuit." Prelim. Resp. 24–25 (citing Ex. 2007, 25–33). Patent Owner contends that the proposed construction in the ITC investigation is "contrary to the Petition's interpretation of Paparrizos as teaching a USB input circuit, and is therefore clearly germane to this proceeding." *Id.* (citing Pet. 61). Patent Owner's argument regarding purported inconsistent

positions by Petitioner may have some merit. But, on this record, Patent Owner's argument is not fully developed.

As neither party proposes an express construction for our consideration and because we determine that claim construction is not necessary to decide whether to institute, we do not expressly construe any claim terms. *See Vivid Techs., Inc. v. Am. Sci. & Eng'g, Inc.*, 200 F.3d 795, 803 (Fed. Cir. 1999) (holding that "only those terms need be construed that are in controversy, and only to the extent necessary to resolve the controversy"); *see also Nidec Motor Corp. v. Zhongshan Broad Ocean Motor Co.*, 868 F.3d 1013, 1017 (Fed. Cir. 2017) (citing *Vivid Techs.* in the context of an *inter partes* review).

Our determination that claim construction is not necessary is preliminary and we invite the parties to further brief claim construction issues—including alleged inconsistent positions—during trial, if desired. We will base any final claim constructions on the full trial record.

D. Discretion to Deny Institution Under 35 U.S.C. § 325(d)

Patent Owner argues that we should exercise our discretion to deny all of the asserted grounds under 35 U.S.C. § 325(d) because they present substantially the same prior art and arguments the United States Patent and Trademark Office ("the Office") previously considered during prosecution. *See* Prelim. Resp. 25–42.

Section 325(d) provides that in determining whether to institute an *inter partes* review, "the Director may take into account whether, and reject the petition or request because, the same or substantially the same prior art or arguments previously were presented to the Office." The Board uses a

two-part framework in determining whether to exercise its discretion under § 325(d), specifically:

> (1) whether the same or substantially the same art previously was presented to the Office or whether the same or substantially the same arguments previously were presented to the Office; and (2) if either condition of the first part of the framework is satisfied, whether the petitioner has demonstrated that the Office erred in a manner material to the patentability of challenged claims.

Advanced Bionics, LLC v. Med-El Elektromedizinische Geräte GmbH, IPR2019-01469, Paper 6 at 8 (PTAB Feb. 13, 2020) (precedential).

In applying the two-part framework, we consider several non-exclusive factors, including: (a) the similarities and material differences between the asserted art and the prior art involved during examination; (b) the cumulative nature of the asserted art and the prior art evaluated during examination; (c) the extent to which the asserted art was evaluated during examination, including whether the prior art was the basis for rejection; (d) the extent of the overlap between the arguments made during examination and the manner in which Petitioner relies on the prior art or Patent Owner distinguishes the prior art; (e) whether Petitioner has pointed out sufficiently how the Examiner erred in its evaluation of the asserted prior art; and (f) the extent to which additional evidence and facts presented in the Petition warrant reconsideration of the prior art or arguments. *Becton, Dickinson & Co. v. B. Braun Melsungen AG*, IPR2017-01586, Paper 8 at 17–18 (PTAB Dec. 15, 2017) (precedential as to § III.C.5, first paragraph).

a) Advanced Bionics Framework Part (1)

Under the first part of the *Advanced Bionics* framework, we consider whether the same or substantially the same art or arguments were previously

presented to the Office. *Advanced Bionics*, Paper 6 at 8. Relevant to the first part of the *Advanced Bionics* framework, we evaluate *Becton, Dickinson* factors (a), (b), and (d).

(1) Richardson, Zhao, and Dao (Grounds 1 and 2)

Petitioner argues that it does not rely on the same or substantially the same prior art or arguments that were before the Examiner during prosecution of the '243 patent. Pet. 20. Petitioner acknowledges that Richardson was before the Office but states that Zhao was not. *Id*. at 20–21. Petitioner explains that it relies on Zhao to supply the feature that was missing from the prior art during prosecution of the '243 patent. *Id.* Specifically, Petitioner explains that "[a]lthough Richardson was used by the Examiner to reject claims of the '243 patent, the Examiner failed to consider *any* prior art teaching USB charging via a DC-DC *boosting* technique which is the exact feature Patent Owner argued was missing." *Id*. at 20 (citing Ex. 1002, 476, 1797–98). According to Petitioner, "Patent Owner amended the claims to require both a USB charging input and a USB charge circuit configured to 'increase charge voltage'" to overcome a rejection based in part on Tinaphong, which "taught ***bucking*** (i.e., decreasing) an input voltage derived from a USB power source but did not teach ***boosting*** a USB input voltage," as claimed. *Id.* (citing Ex. 1002, 476). According to Petitioner, "Patent Owner offered substantially similar arguments in response to the Examiner's combination of Richardson and Balmefrezol, arguing that Balmefrezol only disclosed bucking voltage rather than boosting." *Id.* (citing Ex. 1002, 606–25, 1794, 1797–98). Petitioner contends that "Zhao is therefore non-cumulative because it teaches the USB charging limitations missing from Tinaphong and Balmefrezol which led to allowability of the

claims." *Id.* at 21. Thus, Petitioner argues that the first part of the *Advanced Bionics* framework weighs against discretionary denial. *Id.* at 20–21.

Patent Owner argues that Richardson is "the same primary reference . . . the Office expressly used to reject the claims during prosecution" of the '023 patent and that Petitioner "uses Richardson in the same manner that the Office did, relying on it to teach various elements of the jump starter system, such as the claimed power supply, positive and negative polarity battery terminal connectors, and the power switch." Prelim. Resp. 29. Patent Owner argues that Petitioner's assertion that the Office allowed the claims of the '243 patent because of the addition of a boost converter is incorrect. *Id.* at 31. Instead, Patent Owner contends that during prosecution, "the Office ultimately allowed the claims after considering applicant's arguments that such references were non-analogous and that the skilled artisan would not have modified Richardson in view of them." *Id.* Patent Owner asserts that "there is a high degree of overlap between the prior-art arguments made during examination and the manner in which Petitioner relies upon the prior art in the Petition." *Id.* at 32. According to Patent Owner, Petitioner relies on the combination of Richardson and Zhao in a similar manner as the Office when the Examiner considered the combination of Richardson and Tinaphong. *Id.* at 32 (citing Ex. 2005, 441). Patent Owner explains that "[a]lthough Tinaphong discloses a buck converter instead of a boost converter, the Office expressly considered Lenk[8] after the claims were amended to require a boost conversion . . . and Lenk recognizes that USB input voltages need to be boosted when they are not higher than the battery

[8] US 2012/0187897 A1, published July 26, 2012 (Ex. 2003, "Lenk").

voltage." *Id.* at 32–33 (citing Ex. 2005, 2075–76). Patent Owner notes that the Petition fails to "discuss these teachings from Lenk or to address the similarities between Lenk's boost conversion teachings and the Petition's reliance on Zhao and Paparrizos." *Id.* at 33.

Patent Owner asserts that Dao, which is asserted against some of the dependent claims, was already presented to the Office on an information disclosure statement and "adds nothing to the § 325(d) analysis." Prelim. Resp. 34. Patent Owner further asserts that the Office considered numerous references that describe boost converting input charging voltages including Ho[9] and Ishino[10] among others. *Id.* at 35–37 (noting these references were presented to the Office on an information disclosure statement, "IDS").

We have analyzed the foregoing factors in view of the record and determine that the factors weigh against exercising our discretion under § 325(d) to deny institution. In its Petition, Petitioner alleges that Richardson discloses all of the limitations of independent claim 1 except for the limitations 1(f) and 1(g). Pet. 26–34. During prosecution of the '243 patent and the '023 patent, the Examiner found that Richardson disclosed all of the limitations of independent claim 1 except for the limitations 1(f) and 1(g). Ex. 1002, 443–68, Ex. 2005, 155–66; *see also* Prelim. Resp. 29. Therefore, Petitioner (as it acknowledges) relies on Richardson in the same manner as already considered by the Office.

As to limitations 1(f) and 1(g), however, Petitioner alleges that Zhao discloses these limitations. *See* Pet. 34–42. During prosecution, the Examiner relied on the combination of Richardson, Tinaphong, and

---

[9] US 7,017,055 (Ex. 2004, "Ho").
[10] US 8,786,247 (Ex. 2005, "Ishino").

Balmefrezol as suggesting similar limitations. *See* Ex. 1002, 440–68, 601–35. The Examiner allowed these claims after Patent Owner amended its claims to require the USB input charge circuit to *increase* charge voltage and argued that the references disclosed down converting voltage. *See* Ex. 1002, 485–95, 1794–98, 2237–39. The Examiner also considered the Lenk reference which states that

> the input voltage, in the case of a low voltage harvesting device such as a solar cell, was converted to a higher voltage than the voltage of the storage element/battery in order to transfer charge to the storage element/battery 306 or, in the case of a power source with a voltage higher than the voltage of the storage element/battery 306, to regulate that power to a voltage adequate to charge the storage element/battery 306.

See Ex. 2006 ¶ 23. The Examiner, during the prosecution of the '023 patent, explained that although Lenk discusses increasing voltage, Lenk

> discloses a battery charger that uses external USB/external power input connection node 502 is added to enable a USB or other type of external power connector to be connected with the battery charger 512. However, this voltage being at a voltage higher than the battery voltage, thus not requiring any voltage boost, which teaches away from the claimed invention as a boost voltage is required to charge a power supply of a jump start apparatus from a low 5V potential standard USB chargers to an up-converted voltage of 12.4 Volts as required by the present application.

See Ex. 2005, 642. Said another way, "[a]lthough Lenk describes USB input charging, the Office correctly identified that Lenk's internal battery voltage is below 5V, which makes a USB input charging 'voltage higher than the battery voltage, thus not requiring any voltage boost.'" Prelim. Resp. 23 (citing Ex. 2005, 642).

Here, Petitioner relies on modifying Richardson with Zhao to increase the USB input voltage. *See* Pet. 25–27; 34–42. Therefore, because Petitioner has shown sufficiently, based on the current record, that Zhao teaches the USB charging limitations missing from Tinaphong, Balmefrezol, and Lenk, Zhao is therefore not substantially the same as Tinaphong, Balmefrezol, or Lenk.

Thus, Petitioner does not rely on Zhao in the same manner as the Examiner relied on Tinaphong, Balmefrezol, or Lenk during prosecution and we are not persuaded that the combination of Richardson and Zhao, a combination not considered by the Examiner, is duplicative or cumulative of prior art and arguments previously considered by the Examiner. Accordingly, we are persuaded, based on the totality of the evidence presented, that the combination of Richardson and Zhao does not present "the same or substantially the same prior art that was previously presented to the Office."

(2) Yu, Paparrizos, and Dao (Grounds 3 and 4)

Petitioner argues that "Ground 3 presents an obviousness challenge based on new art and arguments not previously before the Examiner—Yu in view of Paparrizos." Pet. 21. Petitioner explains that Yu was cited to the Office "in an Information Disclosure Statement but not substantively considered by the Examiner." *Id*. (citing Ex. 1002, 647–80, 776). According to Petitioner, Yu discloses all of the limitations of independent claim 1 except for the limitations 1(f) and 1(g), which are suggested by Paparrizos. *Id*. at 53–62. Petitioner argues that "like Zhao, Paparrizos was not before the Examiner and teaches precisely what Patent Owner argued was missing from the prior art of record—increasing a USB input voltage

via a DC-DC boost converter." *Id*. at 21–22 (citing Ex. 1009, 3:2–6, 3:31–35, 8:10–31).

Patent Owner alleges that Yu is substantially similar to Richardson and that Petitioner relies on Yu in the same manner as Richardson. Prelim. Resp. 29–31. As such, Petitioner relies on Yu in the same manner as already considered by the Office. Patent Owner also contends that like Zhao, Paparrizos is used the same way as Tinaphong and Lenk. Prelim. Resp. 31–34.

For the same reasons as those discussed with reference to Zhao, Paparrizos is not substantially the same as Tinaphong, Balmefrezol, or Lenk. Petitioner does not rely on Paparrizos in the same manner as the Examiner relied on Tinaphong or Lenk during prosecution. Instead, Petitioner relies on Paparrizos to teach a USB power input connector to increase charge voltage. Pet. 58–62. Therefore, as to limitations 1(f) and 1(g), Paparrizos is not substantially the same art as Tinaphong or Lenk. Accordingly, we are persuaded, based on the totality of the evidence presented, that the combination of Yu and Paparrizos does not present "the same or substantially the same prior art that was previously presented to the Office."

b) Conclusion as to Advanced Bionics Framework

In view of the foregoing discussion, we conclude that the prior art and arguments relied upon in the Petition are not the same or substantially the same art or arguments previously presented to the Office. Accordingly, the first condition of the *Advanced Bionics* framework is not satisfied. Because we do not determine that the same or substantially the same art or arguments were before the Examiner during examination, we need not turn to the

second step of the *Advanced Bionics* framework.[11] Therefore, we decline to exercise our discretion to deny institution of *inter partes* review under 35 U.S.C. § 325(d).

E. Challenge Based on Richardson and Zhao (Ground 1)

Petitioner alleges that claims 1 and 2 of the '243 patent are rendered obvious by Richardson and Zhao. Pet. 24.

1. Overview of the Prior Art

a) Richardson (Ex. 1005)

Richardson is titled "method and apparatus for providing supplemental power to an engine. Ex. 1005, code (54). Richardson "relates to a portable power source for a motor vehicle and, more particularly, to a method and apparatus to provide supplemental power to start internal combustion and turbine engines." *Id.* ¶ 2. Richardson explains that if "the

[11] We also have considered Patent Owner's argument that Zhao and Paparrizos are cumulative of Ho and Ishino, which were included on information disclosure statements. Prelim. Resp. 35–38. Ho and Ishino were among hundreds of references before the Office. Ex. 1002, 390–97, 402–13, 414–29, 1887–98, 1889–1913, 2280–99; Pet. 23 (noting hundreds of references were before the Examiner). There is no indication that the Examiner substantively considered Ho and Ishino, alone or in combination with Richardson or Yu. To the extent they are cumulative, the evidence suggests that the Examiner erred by overlooking these references. *Samsung Electronics Co. Ltd. v. Headwater Research LLC*, IPR2023-01157, Paper 9 at 7–8 (PTAB Jan. 22, 2024) (finding material error, in part, because references were among 1800 cited in information disclosure statements and not substantively considered during prosecution); *see also, e.g., Hum Industrial Technology, Inc. v. Amsted Rail Company, Inc.*, IPR2023-00540, Paper 10 at 44–45 (PTAB Aug. 11, 2023) (finding examiner did not sufficiently evaluate or appreciate a reference submitted on an IDS with 37 other references).

batteries [of a motor vehicle] are cross-connected or the clamps inadvertently contact each other when one end of the jumper cables is connected to a battery, sparking can occur resulting in . . . a potential for the batteries exploding and fire[.]" *Id.* ¶ 5.

Richardson states that

> [t]he present invention monitors the voltage of the battery of the vehicle to be jump started and the current delivered by the jump starter . . . to determine if a proper connection has been established and to provide fault monitoring. For safety purposes, only if the proper polarity is detected can the system operate. . . . The system includes one or more internal batteries and capacitors to provide the power to the battery of the vehicle to be jump started. Once the vehicle is started, the vehicle's electrical system may recharge the batteries and capacitors before the unit automatically electrically disconnects from the vehicle's battery.

Id. ¶ 7.

An example jump starter 10 (illustrated by a schematic of Figure 1 and by circuit diagrams of Figures 2A–D) includes microprocessor 12, sensors, LED indicators, capacitors 21 and batteries 22 that collectively supply charging power for charging a vehicle battery, two in-series shunt cables 36, 37 that carry the charging power to the vehicle battery, and contact relay 34 that selectively gates the charging power to the vehicle battery (relaying between the shunt cables 36, 37). *Id.* ¶¶ 12, 14, 16, Fig. 1. When jump starter 10 is powered on, microprocessor 12 initializes the hardware, reads all system parameters and variables, and initializes an interrupt service routine. *Id.* ¶ 22. As part of the routine, a voltage is measured to determine whether cables 36, 37 have been reverse connected to the vehicle. *Id.* ¶ 27. If so, then microprocessor 12 prevents jump starting until the reverse polarity condition is corrected. *Id.* Similarly, another

voltage is measured to determine whether jump starter batteries 22 are not sufficiently charged. *Id.* ¶ 28. Microprocessor 12 prevents jump starting until jump starter batteries 22 are sufficiently charged. *Id.* ¶¶ 28–29.

When the jump starter has been successfully initiated, contact relay 34 is closed and jump starter capacitors 21 and batteries 22 connect to the vehicle battery. *Id.* ¶ 21. Contact relay 34 is opened if the start cycle has successfully completed, a start fault occurs, or the operator interrupts the start cycle. *Id.*

Jump starter 10 may be selectively configured for 12, 18, 24, 30, 36, 42, or 48 volts. *Id.* ¶ 34. For example, if batteries 23 are both 12-volt batteries, the system may be configured for 12-volt or 24-volt operation. *Id.*

b) Zhao (Ex. 1006)

Zhao is titled "step-up battery charging management system and control method thereof." Ex. 1006, code (54). Zhao states that

> Battery charging systems typically utilize . . . an input supplied by a power supply adapter[] and an output coupled to a single-cell battery[] or multi-cell batteries. A universal serial bus (USB) power supply system usually has a rating power supply voltage of 5V. A single-cell lithium battery can employ . . . step-down topology to charge the single-cell battery. Step-up topology can be used in battery management systems with series connected multi-cell lithium batteries. However, in some circumstances, such as high input current or short-circuit at the output, if relatively large current is used directly for charging, the electronic device and/or its battery can be damaged.

Id. at 1:19–30. Figure 1, reproduced below, is an exemplary charger.

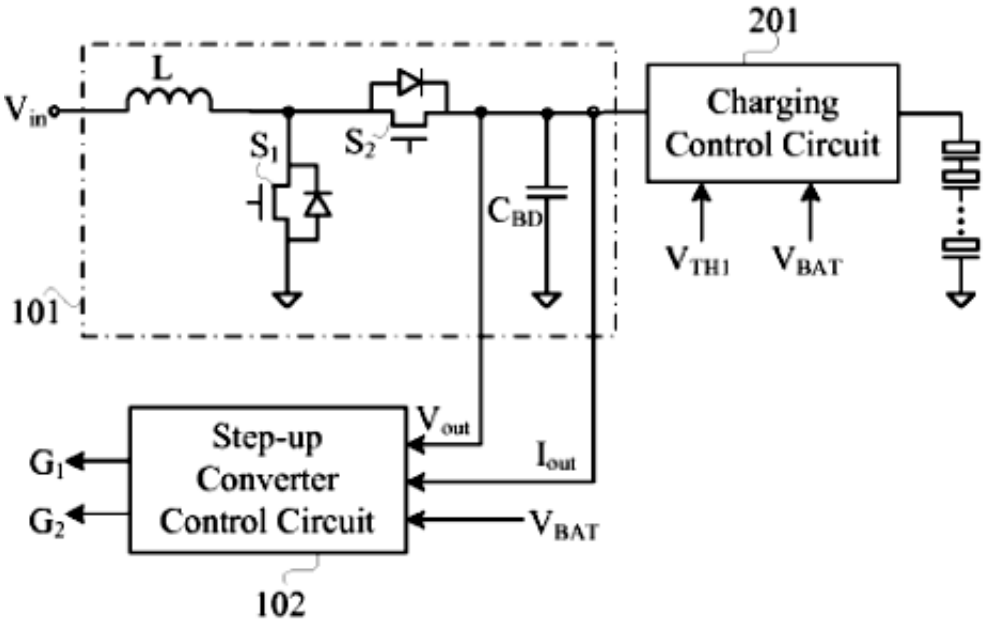

Figure 1 "is a schematic block diagram of a first example step-up battery charger in accordance with embodiments of the present invention." *Id.* at 1:59–61. Step-up battery charger 100 principally includes step-up converter control circuit 102, charging control circuit 201, and power stage circuit 101. *Id.* at 2:63–3:39. Step-up converter portion 101, 102 of charger 100 receives and boosts a DC input voltage V_{in} to generate and output a boosted output signal to charging control circuit 201 for charging of in-series lithium batteries. *Id.* at 3:1–7. DC input voltage V_{in} is provided by a "universal serial bus (USB) charger[] or any other suitable low voltage power supply system." *Id.* at 3:8–11.

2. Analysis of Claim 1

Petitioner argues that the combination of Richardson and Zhao renders claim 1 obvious. Pet. 24. Petitioner contends that limitations 1(preamble) and 1(a) are taught by Richardson's disclosure of a jump starting device with a power supply, i.e., Richardson's batteries 22. *Id.*

at 26–28 (citing Ex. 1005, Abstr., ¶¶ 2, 4, 6–7, 14, 16, 21, 35, Figs. 1, 2A, 2C, 3–8; Ex. 1003 ¶¶ 72, 74). Petitioner contends that limitations 1(b) and 1(c) are taught by Richardson's positive (red clamp) connector and negative (black clamp) connector (together jumper cables 60), which teach a positive and negative battery connector for connecting the jump starting device to the positive/negative battery terminal, as claimed. *Id.* at 28–30 (Ex. 1005, Abstr., claim 26, ¶¶ 16, 27–28, Fig. 2C; Ex. 1003 ¶¶ 76–79). Petitioner contends that limitations 1(d) and 1(e) are taught by Richardson's contact relay 34. *Id.* at 31–34 (Ex. 1005, Abstr., ¶¶ 14, 18, 20, 21, 26–36, 41, 54, claim 26, Figs. 1, 2A–C, 3–5, 6 (step 268); Ex. 1003 ¶¶ 80, 81, 83–85).

With respect to limitation 1(f), Petitioner asserts that although "Richardson is not explicit regarding the type of input connector utilized for charging the jump start batteries," "a [person of ordinary skill in the art] would have been familiar with the relevant USB standards and been motivated to implement USB technology when designing a portable battery-powered device," e.g., "implementation of commercially-available USB receptables (such as a micro-USB receptable) when designing a USB charging feature." Pet. 34–35 (citing Ex. 1005 ¶ 29; Ex. 1005, 1:22–27, 3:1–11; Ex. 1003 ¶¶ 86–87). According to Petitioner, a person of ordinary skill in the art "would have known Zhao's system implements a design requiring the remaining portions of a USB charging system, especially a USB-compliant receptacle (such as a micro-USB connector)" and that "these USB input connectors—which the '243 patent admits are 'standard' (EX1001, 7:23–25)—is further corroborated by the USB standards and other prior art discussing these standard connectors." *Id.* at 35 (citing Ex. 1003 ¶ 88; Ex. 1009, 1:20–23; Ex. 1018; Ex. 1019, ¶ 4).

Petitioner alleges that a person of ordinary skill in the art

> would have been motivated to modify the design of Richardson's jump starter to either (1) replace the existing charging circuitry with Zhao's step-up charging system and connect the output to Richardson's jump starter batteries, or (2) add Zhao's step-up charging system and connect the output to Richardson's jump starter batteries as an additional and alternatively pathway for charging the jump starter batteries. EX1003, ¶ 91.

Id. at 36. According to Petitioner, either option identified would have been beneficial:

> For example, although option 1 may result in longer charging times, it allows the supplier to avoid the need to supply a proprietary charger or other type of AC "power brick" that would be less ubiquitous or less standardized than a USB charger. *Id.* On the other hand, while option 2 would result in a slight increase in cost for including an additional input connector and DC-DC conversion circuitry in Richardson's jump starter, the desirable benefits would include increased flexibility so that the jump starter batteries could be charged via a traditional AC power brick when available, but alternatively by a USB charger if the AC power brick is lost, damaged, or the user is otherwise in a location where only USB power is readily available. *Id.*

Id.; *see also* Ex. 1025, 6; Ex. 1024 ¶¶ 1–4, 8.

Petitioner further alleges that "the desirability of utilizing USB technology to charge battery-powered devices was well-known before the priority date. *Id.* at 37–39 (citing Ex. 1001, 7:21–25; Ex. 1016 ¶ 11; Ex. 1003 ¶¶ 92–94; Ex. 1029; Ex. 1030; Ex. 1009, 1:18–23; Ex. 1027, 26–28; Ex. 1026, 28:14–31:13; 32:22–38:24; 42:23–43:22; 44:2–19; 51:14–54:13, 54:25–56:14; Ex. 1026, 53:2–18; Ex. 1018; Ex. 1019, Abstr., ¶¶ 4–5, Fig. 1, Fig. 2; Ex. 1020; Ex. 1021, 4; Ex. 1017, 2:48–59; Ex. 1022; Ex. 1023, Abstr., claim 1, ¶¶ 3–9, 13, 16–17, Fig. 1). Petitioner further explains that "USB charging ports had become standard equipment in many cars and

trucks before the '243 patent's claimed priority date, which is one location where a jump starter for a vehicle would be stored and charged." *Id.* at 37 (citing Ex. 1003 ¶¶ 92–93).

With respect to limitation 1(g), Petitioner argues that although "Richardson teaches its system includes various features related to charging the jump starter batteries, such as circuitry for detecting a charger voltage and monitoring battery voltage to determine when the charging process is complete," "Richardson does not teach the jump starter's charging circuitry utilizes USB technology." Pet. 40 (citing Ex. 1005 ¶¶ 20, 28–29; Ex. 1003 ¶ 96). Petitioner contends that

> Zhao teaches USB input circuits configured for converting power from a USB power source (such as one providing a 5V input) to increase power voltage to the power supply were well-known for portable battery-powered devices that require charging a multicell battery pack with a voltage rating above the voltage received from the power source.

Id. (citing Ex. 1006, Abstr., 1:22–23, 1:25–27, 3:6–11; Ex. 1003 ¶ 96). Petitioner further alleges that Zhao teaches a technique to boost an input voltage, such as a 5V USB power source, to a higher output voltage. *Id.* at 40–41 (citing Ex. 1006, Abstr., 1:22–23, 1:25–27, 1:34–45, 1:46–66, 2:51–3:11; Ex. 1003 ¶¶ 98–99). Petitioner alleges that a person of ordinary skill in the art would have understood "how to connect the boosted output voltage of Zhao's step-up charging system to a battery pack for purposes of charging the battery. *Id.* at 41 (citing Ex. 1006, 3:3–6; 3:12–15, 3:17–21, 3:25–26, 8:21–24; Ex. 1003 ¶ 99). Petitioner contends that just like for limitation 1(f), an ordinary artisan would have been motivated to modify Richardson to either (1) replace Richardson's circuitry with Zhao's system or (2) add Zhao's system to Richardson's device. *Id.* at 42 (citing Ex. 1006,

3:6–11; Ex. 1003 ¶ 100). Petitioner also explains that the "desirability of utilizing USB technology to charge higher-voltage battery-powered devices was well-known" and "was a predictable technique to achieve the desirable feature of USB charging." *Id.* at 42 (citing Ex. 1003 ¶¶ 92–93).

Patent Owner, at this time, does not challenge many of Petitioner's allegations regarding the teachings of Richardson[12] and Zhao. *See generally* Prelim. Resp. Instead, Patent Owner focuses its argument on whether Petitioner has shown a reason to modify the system of Richardson with the teachings of Zhao. *Id.* at 43–47. At this stage of the proceeding, Petitioner's arguments and evidence are sufficient to show that each limitation of claim 1 of the '243 patent is present in the combination of Richardson and Zhao. We address Patent Owner's argument below.

3. Whether Petitioner Has Shown a Reason to Modify Richardson in view of Zhao

Patent Owner argues that Petitioner fails to show that a person of ordinary skill in the art would have modified Richardson's jump starter in the manner proposed. Prelim. Resp. 43–47. In particular, Patent Owner contends Petitioner fails to address "the nature" of Richardson's jump starter and the lack of "existing charging input circuitry" in Richardson's jump starter. Prelim. Resp. 45. First, Patent Owner contends Richardson teaches the jump starter as a "heavy-duty jump starter with very powerful internal batteries" that is "recharged in a short period of time and then used to jump . . . a commercial truck fleet [having] . . . vehicle charging voltages . . . [of,

[12] Petitioner notes "[t]he Board made similar factual findings regarding Richardson in the '015-FWD, which was affirmed on appeal." Pet. 26–44 (citing Ex. 1014, 50–67; Ex. 1015, 2; Ex. 1003 ¶¶ 73, 75, 82, 104).

e.g.,] 12, 18, 24, 30, 36, 42 and 48 volts"—i.e., charging "batteries up to 48 volts by . . . selecting voltage outputs." *Id.* at 43 (citing Ex. 1005 ¶¶ 7, 34–35, 54–55). According to Patent Owner, "[g]iven the focus of Richardson on rapid recharging, the Petition fails to demonstrate that [the skilled artisan] would have modified Richardson's jump starter to include a USB charger which, again, has known charging limitations." *Id.* at 44–45.

Second, Patent Owner contends "Richardson's only disclosed method for recharging the internal batteries involves using its red and black shunt cable ports" and that "[t]here is no charging port or connection of any kind described or depicted in Richardson's device, nor does the Petition point to any." Prelim. Resp. 45–46 (citing Ex. 1005, Figs. 2A, 2C). Patent Owner explains that "Petitioner's proposed modification of 'replacing the existing charging circuitry' of Richardson simply does not make any sense." *Id.* at 46. Thus, Patent Owner concludes that "the combination of Richardson with Zhao is detached from the actual prior-art system being relied on[,] . . . . Petitioner has ignored Richardson's teachings[,] and therefore has failed to meet its burden to explain why a [person of ordinary skill in the art] would have modified Richardson." *Id.* at 46–47.

On this record, Patent Owner's arguments are unpersuasive. Although Patent Owner contends that Petitioner fails to address "the nature" of Richardson's jump starter (*see* Prelim. Resp. 45), Richardson's jump starter charges batteries at various voltages (*see* Ex. 1005 ¶ 54). Petitioner, at this stage of the proceeding, has established that an ordinary artisan would have understood that Zhao's step-up convertor can "charge a plurality of series connected (e.g., lithium) batteries" (*see* Ex. 1006, 6–11) and that Zhao would "be well-suited for starting a traditional lead-acid vehicle starter

battery" like the one in Richardson (*see* Pet. 35–36). Moreover, the claims recite "converting power from a USB power source to increase power voltage." At this stage and on this record, the Board disagrees that this limitation requires increasing to a particular power voltage. *See* Ex. 1001, 8:40–9:6, 11:4–6, 11:46–12:49, 13:29–65, 14:11–15:12. Patent Owner's contrary argument that an ordinary artisan would not have been motivated to modify Richardson to include a charging port because Richardson did not have a charging port (*see* Prelim. Resp. 45–47) is conclusory. In contrast, Petitioner argues that an ordinary artisan would have been motivated to include Zhao's charging port in Richardson's jump starter for convenience, as USB connectors are considered "standard" and to avoid the need to supply proprietary chargers. Pet. 35–39. Petitioner's proposed reasons to combine Richardson and Zhao have rational underpinnings. Accordingly, we are persuaded that Petitioner has shown sufficiently at this stage of the proceeding that an ordinarily skilled artisan would have had reason to combine Richardson and Zhao with a reasonable expectation of success in the combination.

Having determined that Petitioner satisfies the threshold showing under 35 U.S.C. § 314(a) for institution of trial with respect to at least one challenged claim of the '243 patent, we order that trial shall proceed on all claims and all challenged grounds. *SAS Inst. Inc. v. Iancu*, 138 S. Ct. 1348, 1353 (2018) ("The agency cannot curate the claims at issue but must decide them all."); 37 C.F.R. § 42.108(a) ("When instituting . . . review, the Board will authorize the review to proceed on all of the challenged claims and on all grounds of unpatentability asserted for each claim.").

4. Claim 2

Petitioner also alleges that the subject matter of dependent claim 2 is rendered obvious by the combination of Richardson and Zhao. Pet. 43–44. Patent Owner does not separately address the additional limitations of claim 2. *See generally* Prelim. Resp. We have reviewed the information Petitioner provides, including the relevant portions of the MacCarley Declaration and Petitioner's arguments, and determine that Petitioner's arguments and evidence are adequately supported for institution purposes.

F. Challenge Based on Richardson, Zhao, and Dao (Ground 2)

Petitioner also alleges that the subject matter of claims 15, 17, 18, 51, 54, and 57 are rendered obvious by the combination of Richardson, Zhao, and Dao. Pet. 45–53. Patent Owner does not separately address this ground and these claims. *See generally* Prelim. Resp. We have reviewed the information Petitioner provides, including the relevant portions of the MacCarley Declaration and Petitioner's arguments, and determine that Petitioner's arguments and evidence are adequately supported for institution purposes.

G. Challenges Based on Yu and Paparrizos (Ground 3)

Petitioner alleges that claims 1, 2, 15, 17, 18, and 57 of the '243 patent are rendered obvious by Yu and Paparrizos. Pet. 53–66.

1. Overview of the Prior Art

a) Yu (Ex. 1008)

Yu is titled "automotive emergency starting device." Ex. 1008, code (54). Yu "relates to an automotive starting device [and], specifically, an

emergency automotive starting device" (*id.*, Abstr.), i.e., jump starter. Yu states

> A common emergency automotive starting power supply is a lead-acid battery that replaces the original car battery. . . [T]he lead-acid battery itself is relatively heavy and large, . . . lacks a polarity detection function, [and, if] the polarity of the connected emergency starting power supply is opposite to that of the original automobile battery, . . . damage to the battery may occur[] and even an explosion in severe cases. Additionally, . . . [s]parks can be generated instantly when the emergency power supply is connected or disconnected.

Id. ¶ 2. Yu explains that

> The emergency automotive starting power supply in the present invention will not power on when the emergency starting power supply is connected to the automobile circuit with reversed polarity. In addition, the emergency automotive starting power supply in the present invention can effectively prevent the generation of electric sparks when connecting or disconnecting from the vehicle, improving safety.

Id. ¶ 3.

An example of the jump starter (illustrated by a schematic of Figure 1 and circuit diagrams of Figures 2–5) is described as follows:

> [The jump starter principally] consist[s] of an internal battery 1, a charging input 10 interface, a display module 5, a control module 4, a relay 2, input buttons 6 and an output terminal 3[.] . . . [T]he main contacts of the relay 2 are connected to the internal battery 1 and the output terminal 3[. T]he control module 4 includes a microprocessor 42, which controls the opening and closing of the relay 2 through the relay switch circuit 41 to control current output from the internal battery 1 to the output terminal 3[. T]he control module 4 also includes an external battery reverse connection detection circuit 44 that provides a signal [indicating] correct or incorrect [connection of the internal battery 1 to the external battery, i.e., vehicle battery].

Id. ¶ 21. The jump starter also includes voltage detection circuits 43, 45 respectively for the internal battery 1 and the external battery. *Id.* ¶¶ 22–23. The jump starter has an additional input and outputs as follows: a charging input 10 (only perspective view shown; no internal schematics presented) for charging of the internal battery 1 (*id.* ¶ 28, Fig. 8); and 5V, 19V, and 12V output terminals 8, 9, 11 for supplying power to "other electrical equipment" (*id.* ¶¶ 25, 28).

During a jump start operation, output terminal 3 is connected to the vehicle battery. *Id.* ¶ 26. Depending on whether output terminal 3 is connected to the vehicle battery with incorrect polarity or correct polarity, microprocessor 42 accordingly controls connection of internal battery 1 to the vehicle battery by keeping open relay 2 (incorrect polarity) or closing relay 2 (correct polarity). *Id.* Once output terminal 3 is correctly connected to the vehicle battery (correct polarity), microprocessor 42 closes relay 2, the vehicle is started, and microprocessor 42 then opens relay 2. *Id.*

b) Paparrizos (Ex. 1009)

Paparrizos is titled "buck boost charging for batteries." Ex. 1009, code (54). Paparrizos describes "a battery charging circuit having several operating modes include[ing] boost and buck mode, and forward and reverse mode." *Id.*, Abstr. Paparrizos explains that "[c]onsumers are used to . . . battery charging from a USB power source. However, since a large majority of USB devices are defined at 5V, it may not be possible to charge high voltage (>5V) [Li-ion cell stacks] using a typical[] USB power source." *Id.* at 1:9–26. The battery charger of Paparrizos, therefore,

> include[]s first and second terminals . . . [whereby] power received at the first terminal (e.g., via a power source) may be delivered to a device at the second terminal (e.g., electronics or

> a battery), and vice-versa. The battery charging circuit may operate in buck mode (power stepped down) or boost (power stepped up) mode, and in the forward mode (power from first terminal delivered to second terminal) or reverse mode (power from the second terminal delivered to the first terminal).

Id. at 1:30–39. Paparrizos explains that "the electronic device 22b may be a USB device that outputs only 5V[] but must charge an 8.4V battery" and whereby "the battery 14 may supply 8.4V to electronic device 22b which is rated to operate at . . . 5V per the USB specification." *Id.* at 3:58–4:14. Voltages higher than 8.4V are contemplated by Paparrizos. *Id.* at 2:32–40 ("The battery voltage of such batteries typically range from 6–8.4V but can provide lower or higher voltages.").

2. Analysis of Claim 1

Petitioner argues that the combination of Yu and Paparrizos renders claim 1 obvious. Pet. 53. Petitioner contends that limitations 1(preamble) and 1(a) are taught by Yu's disclosure of a jump starting device and an "internal battery," i.e., a power supply. *Id.* at 55 (citing Ex. 1008, Abstr., claim 1, ¶¶ 1, 3–4, 9, 21, 26, Figs. 1, 8; Ex. 1003 ¶¶ 134–135). Petitioner contends that limitations 1(b) and 1(c) are taught by Yu's output terminal. *Id.* at 56 (citing Ex. 1008, Abstr., claim 1, ¶¶ 2–4, 8, 21, 26, Fig. 8; Ex. 1001, 1:10–24, 1:31–35, Fig. 2; Ex. 1003 ¶¶ 136–137). Petitioner contends that limitations 1(d) and 1(e) are taught by Yu's relay 2 that is opened and closed by a relay switch circuit to control current output from the internal battery to the output terminal. *Id.* at 57–58 (citing Ex. 1008, Abstr., claim 1, claim 3, ¶¶ 3–4, 6, 9, 21, 23, 26–27, Figs. 1–2; Ex. 1003 ¶¶ 138–140).

With respect to the USB connector, i.e., limitation (f), Petitioner asserts that "Yu discloses a charging input interface, which can be a 12V/1A

barrel-style receptacle" and "[w]hile Yu is not explicit that the charger's input interface could be a 5V USB input port," a person of ordinary skill in the art would have been motivated to "modify Yu's device to implement the USB charging feature of Paparrizos." Pet. 58 (citing Ex. 1008, Abstr., Fig. 9; Ex. 1003 ¶ 141).

Petitioner explains that a person of ordinary skill in the art would have modified Yu with Paparrizos "through either (1) replacing the existing charging input, or (2) providing an additional and alternative charging input." Pet. 58 (citing Ex. 1003 ¶ 144). Petitioner contends that "Paparrizos identifies a need for using 'very popular' USB technology for charging multicell battery packs rated above 5V" and Paparrizos's "battery charging circuit in a device that has batteries that can output 12V, like Yu's jump starter." *Id.* at 58–59 (citing Ex. 1009, 1:18–26, 2:32–38, 8:18–31; Ex. 1003 ¶ 141). Therefore, Petitioner explains that a person of ordinary skill in the art would have had reason based on consumer demand for charging from a USB power source. *Id.* at 59 (citing Ex. 1009, 1:18–26; Ex. 1003 ¶ 141). Petitioner also contends that "outside the explicit teachings of Paparrizos, the desirability of 5V USB charging of devices with batteries of 5V was well-known to a [person of ordinary skill in the art] before the claimed priority date" and that an ordinary artisan would have understood the need to add a USB receptacle. *Id.* at 59–60 (citing Ex. 1009, 2:56–67, 3:1:6; 4:36–39; 9:36–46, Figs. 1B, 8A; Ex. 1003 ¶¶ 142–143).

With respect to limitation 1(g), Petitioner argues that Yu teaches a charging input interface "depicted in Figure 9 as a 12V/1A barrel-style receptacle" and that Paparrizos teaches a battery charging circuit "to boost an input voltage from a USB source to a higher output to charge an internal

battery of a device." Pet. 60–61 (citing Ex. 1008, Abstr.; Fig. 9; Ex. 1009, 1:34–38, 2:30–40, 2:56–63, Figs. 1B, 1C; Ex. 1003 ¶¶ 145–146). In particular, Petitioner asserts that

> [Paparizzos's] battery can constitute a series-connected configuration of cells of any suitable battery chemistry, such as lithium-ion batteries, at various voltages above 5V, such as 6–8.4V or higher. *See id.*; EX1003, ¶ 161. Paparrizos further contemplates the charging circuit is an USB input circuit whereby power is received from a USB source. EX1009, 2:56–63, FIG. 1B (depicting an electronic device 16B serving as a power source connected to USB connector 16b), FIG. 1C (depicting a USB power source connected to micro-USB connector 16c).

Id. at 61 (citing Ex. 1009, 2:56–63). Petitioner further argues that

> if a 5V USB power source is connected to the battery charging circuit when the battery to be charged is above 5V, then the circuit can operate "as a forward boost converter to increase the voltage level that is receive[d] at input terminal 102 to produce suitable voltage level at charging terminal 104 or system terminal 106." Thus, a [a person of ordinary skill in the art] would understand Paparrizos teaches a USB input circuit that can receive a 5V USB input and increase that power voltage up to approximately 12V via a DC-DC power conversion boosting technique to charge a device with a 3S (three Li-ion cells connected in series) battery pack.

Id. at 61–62 (internal citations omitted) (citing Ex. 1009, 3:31–35, 3:58–4:4, 2:31–38 (discussing application to 3S stack of series connected cells), 8:10–30 (discussing use of forward boost mode to use a 5V USB input to charge a 3S battery which outputs 12V), 9:36–46 (discussing operation and components of boost converter); Ex. 1003 ¶ 148). Petitioner explains that "the desirability of utilizing USB technology to charge higher-voltage

battery-powered devices was well-known before the claimed priority date" of the '243 patent. *Id.* at 49 (citing Ex. 1003 ¶ 149).

Patent Owner, at this time, does not challenge many of Petitioner's allegations regarding the teachings of Yu and Paparrizos. *See generally* Prelim. Resp. Instead, Patent Owner focuses its argument on whether Petitioner has shown a reason to modify the system of Yu with the teachings of Paparrizos. *Id.* at 47–49. At this stage of the proceeding, Petitioner's arguments and evidence are sufficient to show that each limitation of claim 1 of the '243 patent are present in the combination of Yu and Paparrizos. We address Patent Owner's argument below.

3. Whether Petitioner Has Shown a Reason to Modify Yu in view of Paparrizos

Patent Owner argues that Petitioner is incorrect in asserting that "Paparrizos specifically teaches the desirability of charging higher voltage batteries with a 5V input" because "[i]t is undesirable to try to charge a higher voltage battery with a 5V input; indeed, this is the exact problem that Paparrizos seeks to resolve with its 'battery charging circuit.'" Prelim. Resp. 47 (citing Pet. 54; Ex. 1009, 1:5–39).

Patent Owner also contends that Paparrizos does not teach or suggest charging "large-capacity battery systems" such as jump starters or comparable devices. Prelim. Resp. 47–48. According to Patent Owner,

> Paparrizo's techniques relate to charging of "[c]omputer tablets and other mobile devices, such as mobile phones, digital SLR cameras, video recorders, audio devices" with battery packs that "typically range from 3.0V to 8.4V," not to charging jump starters or comparable devices. In fact, Paparrizos describes relying on a "current limiter 218 in order to limit the current flow through the buck boost circuit" from the USB input, which

> further confirms that its charging circuit is not intended for charging large-capacity battery systems.

Id. at 48. Patent Owner further asserts that

> Yu does not specify its internal battery type, and provides a very limited disclosure of its charging input. *See*, Ex. 1008, Fig. 8, ¶ [0028]. Nowhere does the Petition attempt to show how Yu's system, depicted in the circuit diagrams of Figures 1–5, would have been modified to include Paparrizos' complex charging circuit. In fact, Paparrizos' charging circuit includes numerous operating modes—many of which would be useless to the system of Yu.

Id. at 48 (citing Ex. 1008, Fig. 8, ¶ 28; Ex. 1009, 4:42–47).

Patent Owner's arguments are unpersuasive based on the current record. Patent Owner's argument that "it is undesirable to try to charge a higher voltage battery with a 5V input" is contradicted by the objectives described in Paparrizos, which Patent Owner acknowledges. *See* Prelim. Resp. 47; *see also* Ex. 1009, 1:17–39 (describing "boost" or power stepped up mode). Patent Owner's argument that Paparrizos's techniques do not relate to "charging jump starters or comparable devices" (*see* Prelim. Resp. 47) is similarly unpersuasive as this argument is undeveloped and not tied to claim language. *See, e.g.*, Ex. 1001, 8:40–9:6, 11:4–6, 11:46–12:49, 13:29–65, 14:11–15:12 (the asserted claims do not require a particular voltage). Furthermore, Paparrizos describes outputting voltages higher than 8.4V—including in the 12V range. *Id.* at 2:32–38, 8:18–31. Lastly, Patent Owner's argument that "Petitioner also fails to demonstrate how the battery charging circuit of Paparrizos would allegedly be incorporated into the system of Yu" (*see* Prelim. Resp. 48) is unpersuasive because Petitioner explains how an ordinary artisan would be motivated to either "replace the charging circuitry" or "provide additional charging

circuitry" to implement the charging circuit of Paparrizos to boost the voltage in Yu's device (*see* Pet. 58–62), which would have been within the ordinarily skilled artisan's skill set (Pet. 59 ("[A] person of ordinary skill in the art would have been able to implement such a USB connector with Yu's disclosed device with relative ease.")). On this record, Petitioner's proposed reasons to combine Yu and Paparrizos have rational underpinnings.

Accordingly, we are persuaded that Petitioner has shown sufficiently at this stage of the proceeding that an ordinary artisan would have had a reason to combine Yu and Paparrizos with a reasonable expectation of success in the combination.

4. Remaining Claims 2, 15, 17, 18, and 57

Petitioner also alleges that the subject matter of claims 2, 15, 17, 18, and 57 is rendered obvious by the combination of Yu and Paparrizos. Pet. 63–66. Patent Owner does not separately address the additional limitations of claims 2, 15, 17, 18, and 57. *See generally* Prelim. Resp. We have reviewed the information Petitioner provides, including the relevant portions of the MacCarley Declaration and Petitioner's arguments, and determine that Petitioner's arguments and evidence are adequately supported for institution purposes.

H. Challenge Based on Yu, Paparrizos, and Dao (Ground 4)

Petitioner also alleges that the subject matter of claims 15, 17, 18, 51, 54, and 57 are rendered obvious by the combination of Yu, Paparrizos, and Dao. Pet. 66–74. Patent Owner does not separately address this ground and these claims. *See generally* Prelim. Resp. We have reviewed the information Petitioner provides, including the relevant portions of the

MacCarley Declaration and Petitioner's arguments, and determine that Petitioner's arguments and evidence are adequately supported for institution purposes.

III. CONCLUSION

For the foregoing reasons, we determine that Petitioner has demonstrated a reasonable likelihood that it would prevail with respect to at least one of the claims challenged in the Petition. Accordingly, we institute an *inter partes* review of the '243 patent.

IV. ORDER

In consideration of the foregoing, it is hereby:

ORDERED that, pursuant to 35 U.S.C. § 314(a), an *inter partes* review of claims 1, 2, 15, 17, 18, 51, 54, and 57 of U.S. Patent No. 11,447,243 B2 is instituted with respect to all grounds set forth in the Petition; and

FURTHER ORDERED that, pursuant to 35 U.S.C. § 314(c) and 37 C.F.R. § 42.4, notice is hereby given of the institution of a trial, which will commence on the entry date of this Decision.

FOR PETITIONER:

Daisy Manning
Paul Smelcer
HUSCH BLACKWELL LPP
ptab-dmanning@huschblackwell.com
paul.smelcer@huschbalckwell.com

FOR PATENT OWNER:

Joseph Sauer
David Cochran
Matthew Johnson
John Graves
JONES DAY
jmsauer@jonesday.com
dcochran@jonesday.com
mwjohnson@jonesday.com
jgraves@jonesday.com