UNITED STATES PATENT AND TRADEMARK OFFICE

BEFORE THE PATENT TRIAL AND APPEAL BOARD

ADC SOLUTIONS AUTO LLC,
Petitioner

v.

THE NOCO COMPANY,
Patent Owner.

Case IPR2024-00671
U.S. Patent No. 11,584,243

PATENT OWNER'S SUR-REPLY

TABLE OF CONTENTS

EXHIBIT LIST iii

I. INTRODUCTION 1

II. PETITIONER ADC CONTINUES TO MISREPRESENT HOW A PHOSITA WOULD HAVE VIEWED JUMP STARTER DEVICES 2

A. Petitioner Attempts To Minimize The Drawbacks Of Using USB Through Misleading Charging Times 2

1. Petitioner's charging time calculations only correspond to the energy lost through a single jump-start attempt, rather than the actual charging times 2

2. Petitioner's charging calculations contain numerous improper assumptions 6

3. Petitioner's calculations mischaracterize the battery specifications provided in the '243 Patent and the Fayed Declaration 8

B. The Declaration Of Rick Stanfield Confirms That A PHOSITA Would Not Have Modified A Jump Starter To Be Charged With USB 11

C. Petitioner Misapplies The Motivation To Combine Analysis 14

III. PETITIONER'S ADDITIONAL ARGUMENTS WITH RESPECT TO GROUNDS 1 AND 2 LACK MERIT 17

A. Ground 1: A PHOSITA Would Not Have Modified The Jump Starter Of Richardson In View Of Zhao 17

B. Ground 2: A PHOSITA Would Not Have Modified The Jump Starter Of Yu In View Of Paparrizos 20

IV. CONCLUSION 22

CERTIFICATE OF WORD COUNT 23

CERTIFICATE OF SERVICE 24

EXHIBIT LIST

Exhibit No.	Description
Ex. 2001	U.S. Pat. App. Pub. No. 2011/0175461 ("Tinaphong")
Ex. 2002	U.S. Pat. No. 9,506,446 ("Xinfang")
Ex. 2003	U.S. Pat. App. Pub. No. 2013/0154550 ("Balmefrezol")
Ex. 2004	U.S. Pat. No. 11,447,023 (the "'023 Patent")
Ex. 2005	Application file history of '023 Patent
Ex. 2006	U.S. Pat. App. Pub. No. 2012/0187897 ("Lenk")
Ex. 2007	Respondent's Opening Claim Construction Brief (Public Version), *Certain Portable Battery Jump Starters and Components Thereof (II),* Inv. No. 337-TA-1359 (U.S. International Trade Commission)
Ex. 2008	U.S. Pat. No. 7,017,055 ("Ho")
Ex. 2009	U.S. Pat. No. 8,786,247 ("Ishino")
Ex. 2010	WIPO Pub. No. 2015/195321
Ex. 2011	U.S. Pat. App. Pub. No. 2008/0157732
Ex. 2012	G.B. Pat. App. No. 2,265,267
Ex. 2013	Deposition Transcript of the deposition of C. Arthur MacCarley, taken on October 29, 2024
Ex. 2014	Expert Declaration of Dr. Ayman Fayed
Ex. 2015	*Curriculum Vitae* for Dr. Ayman Fayed
Ex. 2016	Deposition Transcript of the deposition of C. Arthur MacCarley, taken on March 10, 2025

I. INTRODUCTION

The burden remains on Petitioner to prove unpatentability of the challenged claims of the ’243 Patent. That burden requires Petitioner to present sufficient evidence that a PHOSITA would have used a USB input circuit to charge a jump starter battery, like that of Richardson and Yu, which would inherently have had a high capacity due to the requirements of its intended application. Having originally failed to even address whether a PHOSITA would have charged a high-capacity battery with a low-power charging source, Petitioner now presents new evidence on reply in an attempt to rectify the shortcomings of the Petition. But the misleading charging time calculations that Petitioner puts forth severely underestimate actual charging times, as Petitioner’s own expert admits. And Petitioner still has not provided ***any*** prior art evidence of USB being used to charge any equivalent battery before the priority date of the ’243 Patent.

Because Petitioner has failed to meet its burden, a determination that the challenged claims are not unpatentable is respectfully requested for the reasons detailed in NOCO’s Response (Paper 11, “POR”) and those presented below.

II. PETITIONER ADC CONTINUES TO MISREPRESENT HOW A PHOSITA WOULD HAVE VIEWED JUMP STARTER DEVICES

A. Petitioner Attempts To Minimize The Drawbacks Of Using USB Through Misleading Charging Times

When trying to establish that it would have been obvious to use USB input charging techniques for a jump starter system, the Petition failed to even address the principal concern that a PHOSITA would have had: whether USB charging would have been suitable to charge the large-capacity batteries found in all vehicle jump starters. In fact, the Petition contained little to no discussion of battery capacities, USB power limitations, or charging times, and instead focused on charging voltage. Having originally failed to address the principal issue that would have prevented a PHOSITA from making the proposed combinations, Petitioner now tries to minimize that real concern by presenting erroneous and misleading charging time calculations.

1. Petitioner's charging time calculations only correspond to the energy lost through a single jump-start attempt, rather than the actual charging times

In a belated attempt to meet its burden, Petitioner now presents charging time calculations in an attempt to demonstrate that jump starters do not require "large individual capacities" or "unreasonable charging times." *See* Reply, pp. 4-7. But Petitioner's calculations are highly misleading for two reasons: (1) the calculated charging times assume that any jump starter battery will only be large enough to

provide a single jump-start attempt; and (2) the charging times require the jump starter battery to be 100% charged prior to the jump-start attempt. Tellingly, Petitioner's expert even admitted that "it would take a lot longer" than the charging times calculated in the MacCarley Declaration to actually charge a depleted jump starter battery. Ex. 2016, 35:22-36:4.

At first glance, Petitioner's methodology for "determine[ing] how long it would take to recharge jump starter batteries" seems reasonable. Reply, p. 5. Petitioner initially determines an "estimate of the energy discharged for one jump start—based upon output voltage, peak current, and duration" and then divides that discharged energy by the maximum charging power associated with USB to determine the total charging time. *Id.*; *see* Ex. 1044, ¶¶ 8-9, Appendix A. According to Petitioner, this results in a total charging time of only about 1 hour when charged from a 7.5 watt USB power source. Reply, p. 6. Petitioner then concludes that these self-serving calculations show that Patent Owner "misrepresents jump starter battery capacity and charging times." Reply, pp. 4-7.

Under further examination, Petitioner's calculations simply don't add up, and certainly do not represent the actual time it would take to recharge a jump starter. Petitioner's charging times instead represent only the charging time associated with the energy lost through a single jump-start attempt, as Petitioner's expert confirmed. *See* Ex. 2016, 35:10-15. But knowing the charging time associated with the energy

spent during a single jump-start attempt is irrelevant since that value will always be substantially less than the actual charging time of any jump starter device. Petitioner's calculations are the equivalent of calculating the time to recharge a smartphone based on the energy spent from a single phone call—a value which tells one nothing about the actual time it will take to charge the full smartphone battery or, more importantly, what charger would be appropriate for that device.

Petitioner's expert even confirmed that jump starters are designed to provide "definitely more than one" jump-start attempt. Ex. 2016, 35:8-9; *see id.*, 35:16-21. In fact, Dr. MacCarley recognized that his own jump starter has "more than enough current" to provide multiple jump-starts in series. Ex. 2016, 19:11-13. Therefore, in order to determine the actual charging time associated with a jump starter battery, the calculated values that Petitioner's expert puts forth (*see* Ex. 1044, Appendix A) would need to be multiplied by the number of jump-start attempts that the device is capable of providing at full charge. So, taking Example 7 of Appendix A in the MacCarley Declaration, for a battery with a 12V output at 1,000 amps for 5 seconds that is continuously charged with 7.5 watts, if that battery is sized to provide 15 jump-start attempts, for example, then the charging time of that device will be 33.3 hours (2.22 hours per attempt times 15 attempts), per Petitioner's calculations. Accordingly, for any jump starter that is capable of performing more than ten jump-start attempts, Petitioner's calculations would underestimate the actual charging time

of the device by at least an order of magnitude.

Jump starters need to have more battery capacity than what is required for only a single jump-start attempt because these devices are often stored in a vehicle for months on end before being used. When a jump starter is left uncharged for an extended period of time, like any battery, it will self-discharge. *See* Ex. 2016, 37:14-19. Accordingly, if a jump starter battery was only sized to provide a single jump-start when fully charged (as Petitioner's calculated charging times require), then any appreciable amount of storage time would result in that jump starter battery being unable to jump-start a vehicle. Petitioner's charging time calculations do not account for this natural loss in charge, but rather assume that a user will take a jump starter off of a charger and immediately put it to use at full charge.

Moreover, a jump starter device will often require multiple jump-start attempts to successfully jump-start a vehicle. As confirmed by Petitioner's expert, each jump-start attempt, whether successful or unsuccessful, will further deplete the battery of the jump starter. *See* Ex. 2016, 40:15-17. In fact, Petitioner's expert confirmed that he himself has failed to jump-start a vehicle on a first attempt, and then succeeded in jump-starting the vehicle on a subsequent attempt. *See* Ex. 2016, 39:24-40:5 ("Yes. In fact, I have had that experience."). Recognizing these limitations, manufacturers of jump starters design the battery size such that it can provide multiple jump-start attempts, even after a period of storage.

Because Petitioner's calculated charging times only correspond to a single jump-start attempt, its values grossly underestimate the actual charging times that would have been associated with USB charging. For this reason alone, Petitioner's belated attempt to show that a PHOSITA would not have been deterred from using USB to charge a jump starter should be disregarded.

2. Petitioner's charging calculations contain numerous improper assumptions

In addition to the fundamental flaw of calculating the charging times associated with only a single jump-start attempt, Petitioner's calculations also suffer from numerous other mistakes and unrealistic assumptions. Petitioner's expert confirmed many of the inaccuracies, including the failure to account for:

- <u>The charging cycle being used, including input power variations in the charging cycle</u>: The calculations in Appendix A assume that the maximum USB charging power (*e.g.*, 7.5 Watts) will be constant, which would require the maximum USB voltage (*e.g.*, 5 Volts) and maximum USB current (*e.g.*, 1.5 Amperes) to be perfectly constant over the entire charging period. Ex. 2016, 25:2-13 ("The calculations assumed it is constant."). But the actual charging power will vary throughout the various stages of the particular charging cycle being used, and will not always be constant. Ex. 2016, 26:11-15 (confirming that he is "not aware of any" charge cycles

that apply the same current and voltage over the entire charging period). Petitioner's expert confirmed that Petitioner's charging time calculations do not account for what kind of charging cycle is being used, including necessary periods where the maximum charging power will not be provided. *See* Ex. 2016, 29:3-7.

- The initial charge level of the portable jump starter battery: The charging power that is provided to a jump starter battery will depend on the starting charge level of that battery, as confirmed by Petitioner's expert. Ex. 2016, 30:25-31:3. The calculations in Appendix A of the MacCarley Declaration do not account for the reduction in the jump starter battery's ability to store energy it approaches 100% charge. *See* Ex. 2016, 31:8-14.
- Energy losses during charging of the jump starter battery: During charging, all of the energy received by the jump starter battery from the charger will not be stored for later use during a jump-start attempt. Instead, some of that energy will be lost (*e.g.*, as heat) during charging. *See* Ex. 2016, 31:22-24. Petitioner's expert confirmed that the calculations do not account for any charging inefficiencies. *See* Ex. 2016, 32:23-33:10.
- Battery temperature during the jump-start attempt. *See* Ex. 2016, 24:6-8 (Petitioner's expert confirming that the calculated values do not account for different battery temperatures).

- The starting charge level of the vehicle battery: More output energy will be required during a jump-start attempt if the vehicle battery is completely dead, instead of partially depleted. *See* Ex. 2016, 38:15-39:10. Petitioner's expert confirmed that the calculations in Appendix A do not account for the charge state of the vehicle battery. Ex. 2016, 39:11-18.
- Variations in output current and voltage during the jump-start attempt: The calculations assume average output voltages and currents, but these values will vary substantially over the course of the jump-start attempt. Ex. 2016, 21:24-22:7.
- Energy losses associated with boost converting the USB input to a higher voltage: While Petitioner does consider a 20% efficiency loss due to conversion (*see* Reply, p. 6), the charging times listed in the table of Appendix A do not account for efficiency losses. *See* Ex. 1044, ¶ 8.

Thus, Petitioner's flawed calculations grossly underestimate the actual charging times, and should be disregarded. Again, Petitioner's own expert confirmed that the actual charging times of a jump starter device would be "a lot longer." Ex. 2016, 36:1-4.

3. Petitioner's calculations mischaracterize the battery specifications provided in the '243 Patent and the Fayed Declaration

Petitioner repeatedly jumbles battery specification terminology (*e.g.*, peak

current, cranking amps, cold cranking amps, boost discharge current, continuous discharge current, etc.) in order to reduce its calculated charging times and attack Dr. Fayed's declaration. The automotive industry has developed several metrics for evaluating the properties of a battery during discharge, many of which contain similar language but have very different meanings. These attempts to muddy the issues through improper substitution of non-equivalent terminology should be ignored.

When calculating its illustrative charging time of about one hour (*see* Reply, p. 6), Petitioner uses the "'243 patent's example of a 400A ***peak current***" for a "routine jump start lasting 5 seconds." *Id.*, p. 5 (emphasis added). But 400A is not the peak current of the battery in the '243 Patent, but rather the burst discharge current. Ex. 1001, 4:23-26 ("[B]urst discharge current is 50C (or 400 amps)."). The C-rating of a battery is defined by the rate of time it takes to discharge.[1] The 400A value provided in the '243 Patent was calculated by multiplying the 8Ah battery of the '243 Patent by 50C. Accordingly, the burst discharge current of 400A outlined in the '243 Patent merely indicates that the battery can theoretically provide a steady

[1] Batteries are usually rated at the 1C rate (60 minutes), which means a fully charged battery with a capacity of 10Ah should be capable of providing 10A for one hour. If that same 10Ah battery is discharged at a C rating of 0.5C it will provide 5A over two hours, and at 5C it will provide 50A over 12 minutes.

400 amp discharge, over the course of 1.2 minutes (60 minutes/50C). This does not mean, however, that the discharge current of the battery would be the same over a shorter period of time, such as a five-second jump-start attempt. Nor is this 400A value a measured "peak current," as Petitioner claims. The actual peak current of the battery of the '243 Patent assuredly would have been higher than the provided 400A burst discharge current.

Even more troubling, Petitioner and the MacCarley Declaration mistakenly characterize the "peak current" as the average output current provided over the course of a jump-start attempt. For example, Petitioner's charging time calculations multiply the "output voltage, ***peak*** current, and duration" together to determine the energy discharged, which assumes that the peak current is provided at a constant value over the course of a jump-start attempt. Reply, p. 5. But, as its name suggests, the peak current of a jump starter battery represents a maximum current that is output for only a short amount of time. When a jump starter is initially turned on, current rushes into the vehicle battery, rising rapidly to reach the peak current (*i.e.*, maximum current) before leveling off to a stable current, which is often referred to as the cranking current or cranking amps (*i.e.*, sustainable current a jump starter can discharge for an extended period). *See* Ex. 2014, ¶ 70.

Continuing to misrepresent the meaning of "peak current," Petitioner attacks the duration and peak current values provided by Dr. Fayed. *See* Reply, p. 5, n.1

("Dr. Fayed testified that a typical jump start takes 20-50 milliseconds."); Ex. 1044, ¶ 3 ("Dr. Fayed's statement that 1,000-4,000 peak amps are needed is greatly overstated . . . ."); *see id.*, ¶ 4 (using Dr. Fayed's peak current values to calculate discharged energy: "4,000 Amps x 24 Volts x 0.00139 Hours"). But Dr. Fayed never stated that 1,000-4,000 Amps needed to be provided for a duration of only 20-50 ms to jump-start a vehicle; instead, Dr. Fayed explained that the peak current, not the cranking current, would last for "approximately 20-50 ms" and needed to be "typically between 1000-4000 amps." Ex. 2014, ¶ 81. Moreover, even if Petitioner's 500A peak current value is considered, a battery sized to produce a 500A peak current is by no means a small-capacity battery, and still would have prevented a PHOSITA from making the proposed combination.

B. The Declaration Of Rick Stanfield Confirms That A PHOSITA Would Not Have Modified A Jump Starter To Be Charged With USB

In support of the calculations included in its Reply, Petitioner introduced the Declaration of Rick Stanfield (Ex. 1046), an exhibit previously filed in IPR2020-00944 challenging related U.S. Patent No. 9,007,015 (the "'015 Patent"), which shares a priority date with the '243 Patent. *See* Reply, p. 6 (citing Ex. 1046). Petitioner relies on Exhibit A of the Stanfield Declaration, which includes a copy of Revision 1.2 to the USB Battery Charging Specification. *See* Ex. 1046, pp. 8-80. This new evidence has been introduced on reply by Petitioner in an attempt to fill

holes in its original Petition, which cited to an earlier version of the USB Battery Charging Specification (Ex. 1025). Given that Petitioner was aware of the more-recent USB Charging Specification when the Petition was filed, this new evidence should have been presented at that time. *See* Ex. 2016, 42:16-17 (Dr. MacCarley confirming that he was previously aware of Revision 1.2). Nevertheless, should the Board consider Petitioner's new evidence, it should consider the Stanfield Declaration in its entirety.

The Stanfield Declaration confirms how a PHOSITA would have thought about charging a portable jump starter at the time of the priority date of the '243 Patent. As he explained in his Declaration, Rick Stanfield is the Chief Technical Officer of The NOCO Company and a named inventor on the '015 Patent. Ex. 1046, ¶ 1. Mr. Stanfield is also a named inventor on the related '243 Patent challenged in this proceeding. Ex. 1001, p. 1. In fact, Mr. Stanfield was the "primary electronic designer of NOCO's Boost jump starter (originally branded as 'Genius Boost')," which practices the '015 Patent and the challenged '243 Patent. Ex. 1046, ¶ 2.

Mr. Stanfield stated that he did not originally consider a USB input charger for the NOCO product. Ex. 1046, ¶ 6 ("In our initial design work for Boost, we included a barrel-type connector for an input . . . with which to charge the internal battery, consistent with my experience in designing similar products as previously referenced."). Mr. Stanfield further confirmed that "[a]t the time of our development

work, the barrel connector style input was commonly used (as it still is) for charging inputs for batteries like the lithium ion batteries used in the Boost jump starter." *Id.*

Contrary to Mr. Stanfield's original decision to rely on a traditional barrel charger, "Jonathan Nook, [a] co-inventor and President/Chief Visionary Officer of NOCO, urged that [NOCO] use a USB charging input rather than the well-known barrel connector." *Id.*, ¶ 7. Mr. Stanfield considered implementing a USB charger, but originally "concluded that incorporating a USB charging input would be detrimental to the Boost jump starter." *Id.,* ¶ 9. Mr. Stanfield specifically identified the following reasons for opposing the incorporation of a USB charging circuit, among others:

- "***[C]harging the jump starter with the USB input would be 4 to 8 times slower*** than using a barrel connector . . . ."
- "Incorporating ***a USB charging input would be complicated to design and build, as it required us to develop and incorporate DC-DC converter circuitry*** to step up the 5V potential from standard USB chargers to the 12.4V required to charge the Boost jump starter[] . . . . Adding that component and circuitry would take time, add cost, and complexity."

Ex. 1046, ¶ 8 (emphases added). Despite Mr. Stanfield reaching these conclusions, fellow-inventor Mr. Nook had the foresight to recognize that USB charging, even with severe drawbacks that deterred all others from accepting it as a viable charging

solution for high-capacity jump starter batteries, would be accepted by consumers, and ultimately successful. *Id.*, ¶ 9.

The Stanfield Declaration thus demonstrates how even an inventor of the ’243 Patent was initially unwilling to accept USB charging as a viable option for charging a battery of sufficient size to be included in a portable jump starter. In fact, Mr. Stanfield states that, at that time, USB was not being used to charge any comparable battery:

> Indeed, I was aware at the time that USB was being used as a conduit for charging inputs for low power batteries, but not for applications similar to that which we incorporated into the Boost jump starter. ***To this day, I have no evidence that, before the priority date of the ’015 patent, USB was being used as a conduit for charging inputs to batteries like those used in Boost jump starter***.

Ex. 1046, ¶ 10 (emphasis added). And even in this proceeding, Petitioner has still provided no evidence that USB was being used to charge any comparable battery before the priority date of the ’243 Patent.

C. Petitioner Misapplies The Motivation To Combine Analysis

Throughout its Reply, Petitioner repeatedly argues that Patent Owner “attempts to distinguish the claims from the prior art based on unclaimed features—battery capacity and charging times.” Reply, p. 2; *see id.*, pp. 8-9 (the claims of the ’243 patent merely recite a “power supply” without regard to capacity). These

arguments represent a fundamental misunderstanding of the core obviousness inquiry: "The claimed invention is not obvious if a person of ordinary skill would not select and *combine the prior art references* to reach the claimed [invention]." *GE v. Raytheon Techs. Corp.*, 983 F.3d 1334, 1352 (Fed. Cir. 2020).

In this instance, the proper inquiry is whether a PHOSITA would have combined the teachings of Richardson with that of Zhao, or the teachings of Yu with those of Paparrizos, to arrive at the claimed invention. Claim 1 of the '243 Patent, which is representative of the challenged claims, recites a "jump starting device" that has many fundamental components common to jump starters, but also requires a "USB charge circuit electrically connecting the USB input connector to the power supply." Ex. 1001, 8:24-47. Given these explicit claim limitations, any obviousness ground would naturally require a showing that a PHOSITA would have actually combined prior art teachings related to jump starters with USB charging techniques.

Petitioner seeks to have the Board ignore the reasons why a PHOSITA would not have actually made the proposed prior art combinations. What Petitioner effectively argues is that, an obviousness ground is acceptable even where a skilled artisan would not have actually combined the prior art's teachings, as long as the reason for not making the combination is not expressly provided in the claim language. Such an approach twists the motivation to combine inquiry, which, like many other obviousness inquiries, is not solely dependent on the challenged claim

language. For example, when considering whether a combination would render a reference "inoperable for its intended purpose," there is no requirement that the intended purpose of the prior art be recited in the claims. *In re Gordon*, 733 F.2d 900, 902 (Fed. Cir. 1984). Likewise, if determining "whether the prior art teaches away from the claimed invention," it is irrelevant whether that teaching specifically relates to particular language of the challenged claims. *In re Mouttet*, 686 F.3d 1322, 1330 (Fed. Cir. 2012). So too, the motivation to combine inquiry must take into account the entire scope and content of the prior art, rather than taking an isolated view of the parts present in the claims.

Whether the claim language includes a specific charging voltage or battery capacity is inconsequential when evaluating the proposed combination, since the grounds that ADC put forth rely on Richardson's and Yu's automotive jump starters. In other words, the claims may not be tied to a particular battery capacity, but the prior art references certainly are. Both the jump starter of Richardson and Yu provide a battery output above 12 volts and at a high current, because that is what is required to jump-start any standard automobile. Moreover, Petitioner has not presented any evidence that any jump starters existed in the art without the innate battery properties necessary to jump-start a vehicle. The cases to which Petitioner cites on this issue (*see* Reply, p. 8) are inapplicable since they do not relate to instances involving whether features within the prior art would have dissuaded a

PHOSITA from making a proposed combination.

The Board should not overlook the reasons that would have prevented a PHOSITA from modifying the prior art in the manner proposed by the Petition.

III. PETITIONER'S ADDITIONAL ARGUMENTS WITH RESPECT TO GROUNDS 1 AND 2 LACK MERIT

A. Ground 1: A PHOSITA Would Not Have Modified The Jump Starter Of Richardson In View Of Zhao

Petitioner contends that Patent Owner "focuses on a single potential drawback," namely, increased charging times, instead of considering the desirable trade-offs associated with charging Richardson via USB. Reply, p. 13. But the ultimate question is not whether there were some advantages associated with USB. Rather, the question is whether a PHOSITA would have modified the jump starter of Richardson to arrive at the claimed invention. As previously explained, a PHOSITA would have considered USB unsuitable for the heavy-duty jump starter taught by Richardson. *See* POR, pp. 24-34.

Petitioner argues that "Richardson's jump starter is not limited to 'rapid recharging' of 'high capacity' batteries." Reply, p. 7. But Richardson plainly discloses a heavy-duty jump starter with powerful internal batteries that can be recharged in an extremely short period of time and then used to jump a fleet of vehicles. *See* Ex. 1005, ¶¶ [0007], [0055]; Ex. 2014, ¶ 92. These teachings are not limited to particular embodiments of Richardson, but rather described in reference

to "FIGS. 1 and 2," the only two figures that include any functional diagraming of Richardson's system. Ex. 1005, ¶ [0055].

Petitioner further argues that "Richardson's capacitors would avoid the need for 'massive' batteries because . . . the capacitors would be rapidly recharged and jump start a vehicle without energy from the batteries." Reply, p. 12. But Richardson plainly states that "[e]ven in situations in which the jump starter batteries 22 may be discharged to an extent that ***they alone*** may not be able to provide the necessary power to start a vehicle . . . ." Ex. 1005, ¶ [0055]. This statement demonstrates that Richardson's jump starter batteries are alone capable of providing the necessary power to jump-start a vehicle. Richardson's batteries are clearly high-capacity, irrespective of the presence of capacitors within Richardson's jump starter system.

Petitioner also tries to minimize Richardson's discussion of output voltages being configured for 48 volt systems. *See id.*, ¶ [0034]. In particular, Petitioner points out additional examples of Richardson (*see* Reply, p. 10) where "the batteries 23 are 12-volt batteries and a battery 25 is a 6-volt battery" such that the output may be either 12, 18, 24, or 30 volts. Ex. 1005, ¶ [0034]. But pointing to a system of three batteries, two of which are 12 volt batteries that are individually capable of jumpstarting a vehicle, in no way demonstrates that Richardson's system would not present a unique charging challenge that would have further deterred a PHOSITA

from relying on USB charging.

Petitioner's remaining arguments also lack merit. Petitioner continues to focus on Zhao's teachings regarding output voltage. *See* Reply, pp. 13-15 (discussing the inclusion of a third battery cell in Zhao's Figure 1). But again, the fact that Zhao may or may not describe boost conversion up to a 12V battery is not the key issue here, because nothing in Zhao supports applying its teachings to high-*capacity* batteries. The Reply also argues that the "XR3403 chip depicted in Figure 2C" is "the entirety of the '243 patent's description of the claimed USB input connector and circuitry." Reply, p. 9; *see id.*, p. 24. But, in actuality, the '243 Patent provides an extensive diagram of the "USB charge circuit 52" (Ex. 1001, 5:15), of which the XR3403 chip forms only a small part:

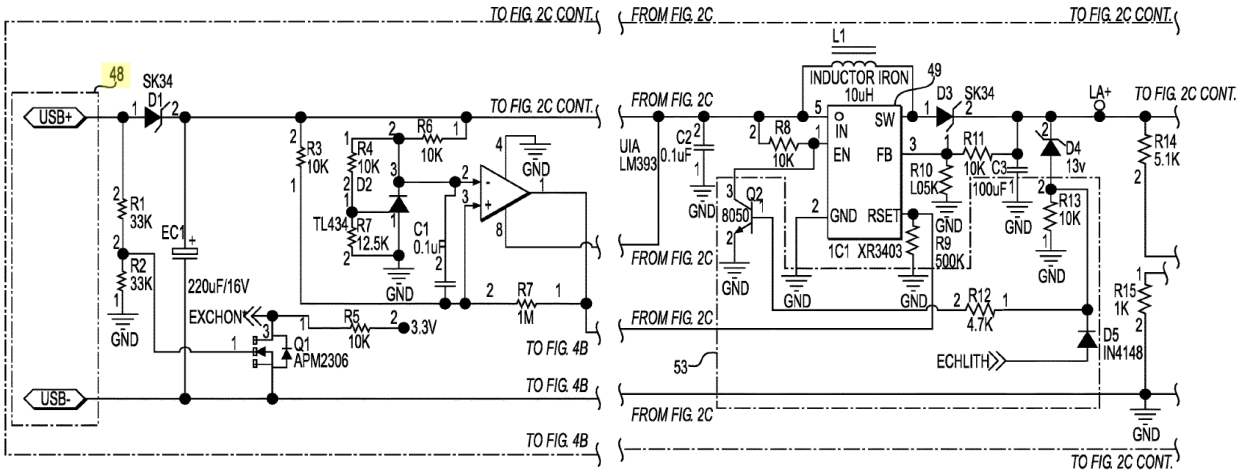

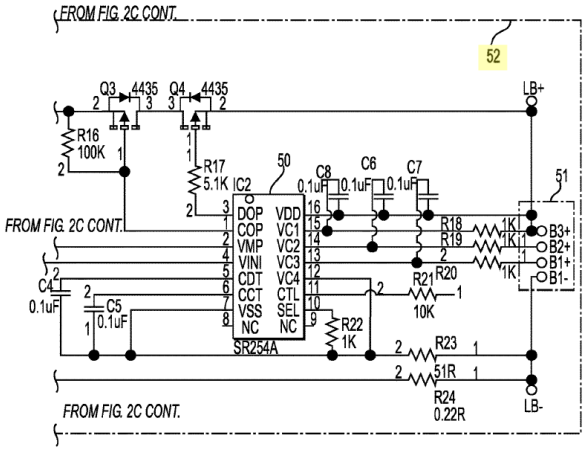

Id., Fig. 2C (color annotations added).

B. Ground 2: A PHOSITA Would Not Have Modified The Jump Starter Of Yu In View Of Paparrizos

Petitioner provides only a limited discussion of Ground 2 on reply, arguing that "Paparrizos's Teachings Are Not Limited to 'Small Battery Systems.'" Reply, p. 19. Yet Petitioner points to no section of Paparrizos describing any application of its techniques to high-capacity battery systems, as opposed to "mobile devices, such as mobile phones, digital SLR cameras, video recorders, audio devices." Ex. 1009, 2:26-29; *see* POR, pp. 40-41. Regardless of voltage, Paparrizos does not teach or suggest applying its techniques beyond small electronics devices known to have low-capacity batteries.

Petitioner also argues that Yu's disclosure of USB output "would not undermine the proposed reasons for combining Yu and Paparrizos," and incorrectly characterizes Patent Owner's discussion as a teaching away argument. Reply, p. 21. As Patent Owner previously explained (*see* POR, pp. 42-47), the knowledge that the

authors of Yu were already contemplating USB output charging and boost conversion techniques, yet still chose to rely on a barrel charger, is evidence that is relevant to whether a PHOSITA would have made the proposed combination. *See Polaris Indus. v. Arctic Cat, Inc.*, 882 F.3d 1056, 1069 (Fed. Cir. 2018) (recognizing the relevance of a prior art reference's teachings "even if a reference is not found to teach away"). Indeed, whether a reference teaches away is "doctrinally distinct" from the motivation to combine analysis. *Rembrandt Wireless Techs., LP v. Samsung Elecs. Co.*, 853 F.3d 1370, 1379 (Fed. Cir. 2017).

But even if one ignores Yu's conscious choice to use a barrel charger instead of USB, this still would not change the fact that Petitioner has failed to demonstrate that a PHOSITA would have modified Yu's large-capacity battery to be charged via USB.

IV. CONCLUSION

For the reasons set forth above, the challenged claims of the ’243 Patent are not unpatentable.

Respectfully submitted,

Dated: March 28, 2025

/Joseph M. Sauer/

Joseph M. Sauer, Reg. No. 47,919
JONES DAY
901 Lakeside Avenue
Cleveland, Ohio 44114
(216) 586-7506
jmsauer@jonesday.com

David B. Cochran, Reg. No. 39,142
JONES DAY
901 Lakeside Avenue
Cleveland, Ohio 44114
(216) 586-7029
dcochran@jonesday.com

Matthew W. Johnson, Reg. No. 59,108
JONES DAY
500 Grant Street, Suite 4500
Pittsburgh, PA 15219
(412) 394-9524
mwjohnson@jonesday.com

John M. Graves, Reg. No. 77,147
JONES DAY
90 South Seventh Street, Suite 4950
Minneapolis, MN 55402
(612) 217-8800
jgraves@jonesday.com

Attorneys for The NOCO Company

CERTIFICATE OF WORD COUNT

Pursuant to Rule 37 C.F.R. 42.24(c)(4), the undersigned hereby certifies that, based upon the word count of the word-processing system used to prepare this response, the number of words in this Patent Owner Response is 4,777.

Respectfully submitted,

Dated: March 28, 2025

/Joseph M. Sauer/
Joseph M. Sauer
Reg. No. 47,919
JONES DAY
North Point, 901 Lakeside Avenue
Cleveland, Ohio 44114
(216) 586-7506

CERTIFICATE OF SERVICE

Pursuant to 37 C.F.R. § 42.6(e), the undersigned certifies that on March 28, 2025, complete and entire copies of the **PATENT OWNER'S SUR-REPLY** and supporting exhibits have been served in their entirety by e-mail on the following counsel of record for Petitioner:

Lead Counsel:	**Back-up Counsel**
Daisy Manning Reg. No. 66,369 HUSCH BLACKWELL LLP 8001 Forsyth Boulevard, Suite 1500 St. Louis, MO 63105 (314) 480-1500 Telephone (314) 480-1505 Facsimile PTAB-DManning@huschblackwell.com	Paul L. Smelcer Reg. No. 74,975 HUSCH BLACKWELL LLP 8001 Forsyth Boulevard, Suite 1500 St. Louis, MO 63105 (314) 480-1500 Telephone (314) 480-1505 Facsimile paul.smelcer@huschblackwell.com

Dated: March 28, 2025

/Joseph M. Sauer/
Counsel for Patent Owner