UNITED STATES PATENT AND TRADEMARK OFFICE

BEFORE THE PATENT TRIAL AND APPEAL BOARD

ADC SOLUTIONS AUTO LLC
Petitioner

v.

THE NOCO COMPANY
Patent Owner

Patent No. 11,584,243
Issue Date: February 21, 2023

Title: JUMP STARTING DEVICE WITH USB

Inter Partes Review No. IPR2024-00671

PETITIONER'S DEMONSTRATIVES FOR ORAL ARGUMENT

Pursuant to the April 25, 2025 Order Setting Oral Argument (Paper 20) and 37 C.F.R. § 42.70, Petitioner ADC Solutions Auto LLC hereby files its Demonstratives for use at Oral Argument, attached hereto.

Respectfully submitted,

Dated: May 23, 2025

By: /*Daisy Manning*/

Daisy Manning, Reg. No. 66,369
Paul L. Smelcer, Reg. No. 74,975
HUSCH BLACKWELL LLP
8001 Forsyth Boulevard, Suite 1500
St. Louis, MO 63105
(314) 480-1500 Telephone
(314) 480-1505 Facsimile
PTAB-DManning@huschblackwell.com
paul.smelcer@huschblackwell.com

Counsel for Petitioner

CERTIFICATE OF SERVICE

I hereby certify that on this 23rd day of May 2025, the foregoing was served via electronic mail to the attorneys of record for the ’243 Patent at the following:

Joseph M. Sauer, Reg. No. 47,919
David B. Cochran, Reg. No. 39,142
JONES DAY
901 Lakeside Avenue
Cleveland, Ohio 44114
jmsauer@jonesday.com
dcochran@jonesday.com

Matthew W. Johnson, Reg. No. 59,108
JONES DAY
500 Grant Street, Suite 4500
Pittsburgh, PA 15219
mwjohnson@jonesday.com

John M. Graves, Reg. No. 77,147
JONES DAY
90 South Seventh Street, Suite 4950
Minneapolis, MN 55402
jgraves@jonesday.com

By: /*Daisy Manning*/
Daisy Manning, Reg. No. 66,369
Lead Counsel for Petitioner

HUSCH BLACKWELL

ADC Solutions Auto LLC,
Petitioner

v.

The NOCO Company,
Patent Owner

Case Nos. IPR2024-00577 and IPR2024-00671

U.S. Patent Nos. 11,447,023 and 11,584,243

The ’023 and ’243 Patents

The ’023 Patent

PORTABLE VEHICLE BATTERY JUMP START APPARATUS WITH SAFETY PROTECTION AND JUMPER CABLE DEVICE THEREOF

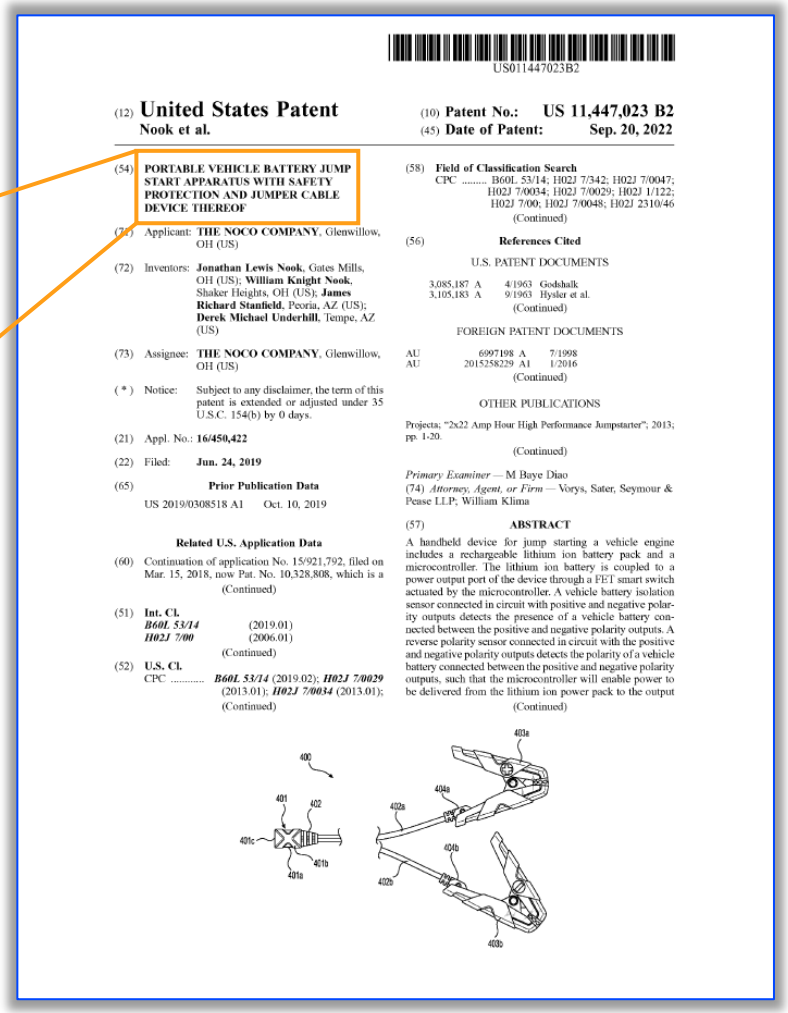

US011447023B2

(12) **United States Patent**
Nook et al.

(10) **Patent No.: US 11,447,023 B2**
(45) **Date of Patent: Sep. 20, 2022**

(54) **PORTABLE VEHICLE BATTERY JUMP START APPARATUS WITH SAFETY PROTECTION AND JUMPER CABLE DEVICE THEREOF**

(71) Applicant: **THE NOCO COMPANY**, Glenwillow, OH (US)

(72) Inventors: **Jonathan Lewis Nook**, Gates Mills, OH (US); **William Knight Nook**, Shaker Heights, OH (US); **James Richard Stanfield**, Peoria, AZ (US); **Derek Michael Underhill**, Tempe, AZ (US)

(73) Assignee: **THE NOCO COMPANY**, Glenwillow, OH (US)

(*) Notice: Subject to any disclaimer, the term of this patent is extended or adjusted under 35 U.S.C. 154(b) by 0 days.

(21) Appl. No.: **16/450,422**

(22) Filed: **Jun. 24, 2019**

(65) **Prior Publication Data**

US 2019/0308518 A1 Oct. 10, 2019

Related U.S. Application Data

(60) Continuation of application No. 15/921,792, filed on Mar. 15, 2018, now Pat. No. 10,328,808, which is a (Continued)

(51) **Int. Cl.**
B60L 53/14 (2019.01)
H02J 7/00 (2006.01)
(Continued)

(52) **U.S. Cl.**
CPC ..... ***B60L 53/14*** (2019.02); ***H02J 7/0029*** (2013.01); ***H02J 7/0034*** (2013.01); (Continued)

(58) **Field of Classification Search**
CPC B60L 53/14; H02J 7/342; H02J 7/0047; H02J 7/0034; H02J 7/0029; H02J 1/122; H02J 7/00; H02J 7/0048; H02J 2310/46
(Continued)

(56) **References Cited**

U.S. PATENT DOCUMENTS

3,085,187 A 4/1963 Godshalk
3,105,183 A 9/1963 Hylder et al.
(Continued)

FOREIGN PATENT DOCUMENTS

AU 6997198 A 7/1998
AU 2015258229 A1 1/2016
(Continued)

OTHER PUBLICATIONS

Projecta; “2x22 Amp Hour High Performance Jumpstarter”; 2013; pp. 1-20.
(Continued)

Primary Examiner — M Baye Diao
(74) *Attorney, Agent, or Firm* — Vorys, Sater, Seymour & Pease LLP; William Klima

(57) **ABSTRACT**

A handheld device for jump starting a vehicle engine includes a rechargeable lithium ion battery pack and a microcontroller. The lithium ion battery is coupled to a power output port of the device through a FET smart switch actuated by the microcontroller. A vehicle battery isolation sensor connected in circuit with positive and negative polarity outputs detects the presence of a vehicle battery connected between the positive and negative polarity outputs. A reverse polarity sensor connected in circuit with the positive and negative polarity outputs detects the polarity of a vehicle battery connected between the positive and negative polarity outputs, such that the microcontroller will enable power to be delivered from the lithium ion power pack to the output
(Continued)

EX1001 (’023), (54); ’023 Paper 6, p. 8

The ’023 and ’243 Patents

BACKGROUND OF THE INVENTION

The present invention relates generally to apparatus for jump-starting a vehicle having a depleted or discharged battery. Prior art devices are known, which provide either a pair of electrical connector cables that connect a fully-charged battery of another vehicle to the engine start circuit of the dead battery vehicle, or portable booster devices which include a fully-charged battery which can be connected in circuit with the vehicle’s engine starter through a pair of cables.

Problems with the prior art arose when either the jumper terminals or clamps of the cables were inadvertently brought into contact with each other while the other ends were connected to a charged battery, or when the positive and negative terminals were connected to the opposite polarity terminals in the vehicle to be jumped, thereby causing a short circuit resulting in sparking and potential damage to batteries and/or bodily injury.

EX1001 (’023), 1:8-24;
’023 Paper 6, pp. 8, 10-11, 20-21, 62;
see also EX1001 (’243), 1:10-25;
’243 Paper 1, pp. 7-10, 15, 56

The ’023 and ’243 Patents

Detailed operation of the handheld booster device will now be described with reference to the schematic diagrams of FIGS. **2A-2C**. As shown in FIG. **2A**, the microcontroller unit **1** is the center of all inputs and outputs. The reverse battery sensor **10** comprises an optically coupled isolator phototransistor (4N27) connected to the terminals of vehicle battery **72** at input pins **1** and **2** with a diode D**8** in the lead conductor of pin **1** (associated with the negative terminal CB–), such that if the battery **72** is connected to the terminals of the booster device with the correct polarity, the optocoupler LED **11** will not conduct current, and is therefore turned off, providing a “1” or high output signal to the MCU **1**. The car battery isolation sensor **12** comprises an optically coupled isolator phototransistor (4N27) connected to the terminals of vehicle battery **72** at input pins **1** and **2** with a diode D**7** in the lead conductor of pin **1** (associated with the positive terminal CB+), such that if the battery **72** is connected to the terminals of the booster device with the correct polarity, the optocoupler LED **11**A will conduct current, and is therefore turned on, providing a “0” or low output signal to the MCU, indicating the presence of a battery across the jumper output terminals of the handheld booster device.

EX1001 (’023), 5:27-30, 5:32-36;
’023 Paper 6, p. 64;
see also EX1001 (’243), 5:36-39, 5:41-45;
’243 Paper 1, pp. 63

Prosecution of the ’023 Patent

Original claims as filed (June 24, 2019)

1. Apparatus for jump starting a vehicle engine, comprising:

an internal power supply;

an output port having positive and negative polarity outputs;

a vehicle battery isolation sensor connected in circuit with said positive and negative polarity outputs, configured to detect presence of a vehicle battery connected between said positive and negative polarity outputs;

a reverse polarity sensor connected in circuit with said positive and negative polarity outputs, configured to detect polarity of a vehicle battery connected between said positive and negative polarity outputs;

a power FET switch connected between said internal power supply and said output port; and

a microcontroller configured to receive input signals from said vehicle isolation sensor and said reverse polarity sensor, and to provide an output signal to said power FET switch, such that said power FET switch is turned on to connect said internal power supply to said output port in response to signals from said sensors indicating the presence of a vehicle battery at said output port and proper polarity connection of positive and negative terminals of said vehicle battery with said positive and negative polarity outputs.

11. The apparatus of claim 1, further comprising a USB charging port configured to provide charging power from an external power source to said internal power supply.

EX1002 (’023), p. 40;
’023 Paper 6, p. 15

Prosecution of the ’023 Patent

Preliminary Amendment (Oct. 17, 2019)

1. (Currently Amended) ~~Apparatus~~ A jump starting apparatus configured for jump starting a discharged or depleted vehicle ~~engine~~ battery, the apparatus comprising:

an internal power supply;

an output [[port]] device configured for connection to the vehicle battery, the output device, having a positive polarity output device, and a negative polarity ~~outputs~~ output device;

a vehicle battery isolation sensor connected in a first circuit with [[said]] the positive polarity output device and the negative polarity ~~outputs~~ output device, the vehicle battery isolation sensor configured to detect a presence of [[a]] the vehicle battery connected between [[[said]] the positive polarity output device, and the negative polarity ~~outputs~~ output device;

a reverse polarity sensor connected in a second circuit with [[said]] the positive polarity output device and the negative polarity ~~outputs~~ output device, the reverse polarity sensor configured to detect a polarity of [[a]] the vehicle battery connected between [[said]] the positive polarity output and the negative polarity ~~outputs~~ output;

a power [[FET]] switch connected between [[said]] the internal power supply and [[said]] the output [[port] device; and

a microcontroller configured to receive one or more input signals ~~from said~~ generated by the vehicle isolation sensor and [[said]] the reverse polarity sensor, and to provide an output signal to [[said]] the power [[FET]] switch, such that [[said]] the power [[FET]] switch is turned on to connect [[said]] the internal power supply to [[said]] the output [[port]] device in response to the one or more input signals from both the [[said]] sensors indicating the presence of a vehicle battery ~~at said~~ connected to the output [[port]] device and a proper polarity connection of positive and negative terminals of [[said]] the vehicle battery with [[said]] the positive and negative polarity ~~outputs~~ output devices.

EX1002 (’023), pp. 88-89;
’023 Paper 6, p. 15

Prosecution of the ’023 Patent

Preliminary Amendment (Mar. 6, 2020)

1. (Currently Amended) A jump starting apparatus configured for ~~jump starting~~ boosting or charging a ~~discharged or~~ depleted or discharged ~~vehicle~~ battery having a positive polarity battery terminal and a negative polarity battery terminal, the jump starting apparatus comprising:

an internal power supply;

~~an output device configured for connection to the vehicle battery, the output device having a positive polarity output device~~

a positive polarity battery terminal connector configured for connecting the jump starting apparatus to the positive polarity battery terminal of the depleted or discharged battery; [[and]]

~~a negative polarity output device~~

a negative polarity battery terminal connector configured for connecting the jump starting apparatus to the negative polarity battery terminal of the depleted or discharged battery;

a ~~vehicle~~ battery ~~isolation~~ presence sensor or circuit connected in a first circuit with the positive polarity ~~output device~~ battery terminal connector and the negative polarity ~~output device~~ battery terminal connector, the vehicle battery ~~isolation~~ presence sensor or circuit configured to detect a presence of the ~~vehicle~~ depleted or discharged battery when connected between the positive polarity ~~output device~~ battery terminal connector and the negative polarity ~~output device~~ battery terminal connector;

a reverse polarity sensor or circuit connected in a second circuit with the positive polarity ~~output device~~ battery terminal connector and the negative polarity ~~output device~~ battery terminal connector, the reverse polarity sensor configured to detect a polarity of the ~~vehicle~~ depleted or discharged battery connected between the positive polarity ~~output~~ battery terminal connector and the negative polarity ~~output~~ battery terminal connector;

a power switch or circuit connected in circuit between the internal power supply and ~~the output device~~ the positive and negative polarity battery terminal connectors; and

a microcontroller configured to receive ~~one or more input signals generated~~ a signal provided by the ~~vehicle~~ battery ~~isolation~~ presence sensor or circuit and receive another input signal provided by the reverse polarity sensor or circuit, and [[to]] provide an output signal to the power switch, ~~such that the power switch is turned on to connect the internal power supply to the output device in response to the one or more input signals from both the sensors indicating the presence of a vehicle battery connected to the output device and a proper polarity connection of positive and negative terminals of the vehicle battery with the positive and negative polarity output devices~~

wherein the power switch or circuit electrically switches the internal power supply to connect with the depleted or discharged battery only when the depleted or discharged battery is determined by the microcontroller to be present in response to the signal provided by the battery presence sensor or circuit and connected to the depleted or discharged battery with correct polarity in response to the signal provided by the reverse polarity sensor.

EX1002 (’023), pp. 113-114;
’023 Paper 6, p. 15

Prosecution of the ’023 Patent

Amendment (Jan. 12, 2021)

1. (Currently Amended) A jump starting apparatus configured for boosting or charging a depleted or discharged battery having a positive polarity battery terminal and a negative polarity battery terminal, the jump starting apparatus comprising:

~~an internal~~ a power supply;

a positive polarity battery terminal connector configured for connecting the jump starting apparatus to the positive polarity battery terminal of the depleted or discharged battery;

a negative polarity battery terminal connector configured for connecting the jump starting apparatus to the negative polarity battery terminal of the depleted or discharged battery;

~~a battery presence sensor or circuit connected in a first circuit with the positive polarity battery terminal connector and the negative polarity battery terminal connector, the vehicle battery presence sensor or circuit configured to detect a presence of the depleted or discharged battery when connected between the positive polarity battery terminal connector and the negative polarity battery terminal connector;~~

~~a reverse polarity sensor or circuit connected in a second circuit with the positive polarity battery terminal connector and the negative polarity battery terminal connector, the reverse polarity sensor configured to detect a polarity of the depleted or discharged battery connected between the positive polarity battery terminal connector and the negative polarity battery terminal connector;~~

~~a power switch or circuit connected in circuit between the internal power supply and the positive and negative polarity battery terminal connectors; and~~

~~a microcontroller configured to receive a signal provided by the battery presence sensor or circuit and receive another input signal provided by the reverse polarity sensor or circuit, and provide an output signal to the power switch,~~

~~wherein the power switch or circuit electrically switches the internal power supply to connect with the depleted or discharged battery only when the depleted or discharged battery is determined by the microcontroller to be present in response to the signal provided by the battery presence sensor or circuit and connected to the depleted or discharged battery with correct polarity in response to the signal provided by the reverse polarity sensor.~~

a power switch or circuit configured to turn on power from the power supply to the positive and negative polarity battery terminal connectors;

a control system or circuit connected to and controlling the power switch, the system or circuit configured to detect whether the positive and negative polarity battery terminal connectors have a proper connection with the positive and negative polarity battery terminals of the depleted or discharged battery prior to turning on the power switch or circuit;

a USB charge circuit connected to the power supply, the USB charge circuit configured for converting power from a USB charger to charge voltage and current for charging the power supply; and

a USB connector configured for connecting to the USB charger and providing charge input from the USB charger through the USB connector to the USB charge circuit.

EX1002 (’023), pp. 256-258;
’023 Paper 6, p. 16

Prosecution of the ’023 Patent

Amendment (Oct. 25, 2021)

1. (Currently amended) A jump starting apparatus configured for boosting or charging a depleted or discharged battery having a positive polarity battery terminal and a negative polarity battery terminal, the jump starting apparatus comprising:

a power supply;

a positive polarity battery terminal connector configured for connecting the jump starting apparatus to the positive polarity battery terminal of the depleted or discharged battery;

a negative polarity battery terminal connector configured for connecting the jump starting apparatus to the negative polarity battery terminal of the depleted or discharged battery;

a power switch or circuit configured to turn on power from the power supply to the positive and negative polarity battery terminal connectors;

a control system or circuit connected to and controlling the power switch, the control system or circuit configured to detect whether the positive and negative polarity battery terminal connectors have a proper or improper connection with the positive and negative polarity battery terminals of the depleted or discharged battery prior to turning on the power switch or circuit;

a USB input charge circuit connected to the power supply, the USB input charge circuit comprising a DC/DC converter, the USB input charge circuit configured for converting power from a USB charger to increase charge voltage ~~and current~~ for charging the power supply; and

a USB input connector connected to the USB input charge circuit, the USB input connector configured for connecting to the USB charger and providing charge input from the USB charger through the USB input connector [[to]] and the USB input charge circuit to the power supply.

EX1002 (’023), pp. 478-479;
’023 Paper 6, pp. 17-18

Prosecution of the ’023 Patent

Argument made with Amendment (Oct. 25, 2021)

Furthermore, ***Tinaphong*** in fact teaches away from attempting to modify the jump starter of ***Richardson*** with the USB input connector and USB input charge circuit of ***Tinaphong***. Specifically, ***Tinaphong*** teaches applying a second stage DC-to-DC converter circuit 22 acting as a low drop out, step down voltage converter/regulator to convert the 5 volt DC signal provided on the USB charger input connector 24 from an external source to a 3.7 volt DC signal on the output of the second DC-to-DC converter circuit used to charge the lithium polymer battery 18 (see paragraph [0040]).

Dropping down the voltage as taught by ***Tinaphong*** is the exact opposite and wrong direction to the requirement of stepping up or increasing the charging voltage to charge the internal lithium polymer battery 18 of ***Tinaphong*** to at least 12 V so that the apparatus could be modified to become or be used as a jump starter as asserted in this rejection. Applicant disagrees with the rejection in attempting to use the teaching of ***Tinaphong*** to further modify the combination of ***Richardson and Xinfang***, which is already defective, since again both ***Richardson and Xinfang*** do not disclose a USB input connector and USB input charge circuit.

EX1002 (’023), pp. 499-500;
’023 Paper 6, pp. 17-18

Prosecution of the ’023 Patent

Notice of Allowance (Mar. 10, 2022)

16. While US 20120187897 to Lenk et al., (Lenk) discloses(a battery charger that uses external USB/external power input connection node 502 is added to enable a USB or other type of external power connector to be connected with the battery charger 512. However, this voltage being at a voltage higher than the battery voltage, thus not requiring any voltage boost, which teaches away from the claimed invention as a boost voltage is required to charge a power supply of a jump start apparatus from a low 5V potential standard USB chargers to an up-converted voltage of 12.4Volts as required by the present application.

EX1002 (’023), p. 642;
’023 Paper 6, p. 18

Prosecution of the ’243 Patent

Amendment (Feb. 7, 2022)

24. (Currently amended) A jump starting device for boosting or charging a depleted or discharged battery having a positive battery terminal and a negative battery terminal, the jump starter device comprising:

a power supply;

a positive battery connector for electrically connecting the jump starter device to the positive battery terminal of the depleted or discharged battery;

a negative battery connector for electrically connecting the jump starter device to the negative battery terminal of the depleted or discharged battery;

a power switch connected in circuit with the power supply and the positive and negative battery connectors, the power switch configured to switch power on or off from the power supply to the depleted or discharged battery, the power switch configured to switch power on ~~only~~ when ~~properly~~ the jump starting device is connected to the ~~positive and negative battery connectors~~ the depleted or discharged battery; and

a USB ~~charging~~ input ~~configured to provide charging power from an external power source~~ charge circuit connected to the power supply, the USB input charge circuit comprising a DC/DC converter, the USB input charge circuit configured for converting power from a USB charger to increase charge voltage for charging the power supply; and

EX1002 (’243), pp. 485-495;
’243 Paper 1, p. 13

Prosecution of the ’243 Patent

Argument made with Amendment (Feb. 7, 2022)

Furthermore, ***Tinaphong*** in fact teaches away from attempting to modify the jump starter of ***Richardson*** with the USB input connector and USB input charge circuit of ***Tinaphong***. Specifically, ***Tinaphong*** teaches applying a second stage DC-to-DC converter circuit 22 acting as a low drop out, step down voltage converter/regulator to convert the 5 volt DC signal provided on the USB charger input connector 24 from an external source to a 3.7 volt DC signal on the output of the second DC-to-DC converter circuit used to charge the lithium polymer battery 18 (see paragraph [0040]).

Dropping down the voltage as taught by ***Tinaphong*** is the exact opposite and wrong direction to the requirement of stepping up or increasing the charging voltage to charge the internal lithium polymer battery 18 of ***Tinaphong*** to at least 12 V so that the apparatus could be modified to become or be used as a jump starter as asserted in this rejection. Applicant disagrees with the rejection in attempting to use the teaching of ***Tinaphong*** to further modify ***Richardson***, since again ***Richardson*** does not disclose a USB input charge input and USB input charge circuit.

EX1002 (’243), p. 476;
’243 Paper 1, p. 13

Prosecution of the ’243 Patent

Amendment (June 15, 2022)

24. (Currently amended) A jump starting device for boosting or charging a depleted or discharged battery having a positive battery terminal and a negative battery terminal, the jump ~~starter~~ starting device comprising:

a power supply;

a positive battery connector for electrically connecting the jump starter device to the positive battery terminal of the depleted or discharged battery;

a negative battery connector for electrically connecting the jump starter device to the negative battery terminal of the depleted or discharged battery;

a power switch or switch circuit connected in circuit with the power supply and the positive and negative battery connectors, the power switch or switch circuit configured to switch power on ~~or off~~ from the power supply to boost or charge the depleted or discharged battery when connected between~~, the power switch configured to switch power on when connected to~~ the positive and negative battery connectors;

[[and]]

a USB input connector; and

a USB charge circuit electrically connecting the USB input connector to the power supply, the USB charge circuit comprising a DC-DC converter configured to up-convert voltage from the USB input connector to the power supply.

~~a USB input charge circuit connected to the power supply, the USB input charge circuit comprising a DC/DC converter, the USB input charge circuit configured for converting power from a USB charger to increase charge voltage for charging the power supply; and~~

~~a USB charging input connected to the USB input charge circuit, the USB charging input configured for electrically connecting to the USB charger and providing charging input from the USB charger through the USB charging input and the USB input charge circuit to the power supply.~~

EX1002 (’243), pp. 1777-1790;
’243 Paper 1, p. 13

Prosecution of the ’243 Patent

Argument made with Amendment (June 15, 2022)

> Specifically, Balmefrezol does not disclose up-converting (i.e. increasing or boosting) the voltage from the USB interface to the internal battery in an electronic device (e.g. cell phone) let alone in a jump starting device. Further, Balmefrezol does not teach or suggest up-converting (i.e. increasing or boosting) the voltage from the USB interface to the internal battery, but instead teaches away from the claimed USB charging feature by disclosing down-converting (i.e. decreasing or bucking) the voltage from the USB interface to the internal battery of the electronic device.

EX1002 (’243), pp. 1794, 1797-1798;
’243 Paper 1, pp. 13-14

Specification's Discussion of USB Input Charging

USB charge circuit **52** converts power from any USB charger power source, charge voltage and current for charging the lithium battery pack **32**. USB output **56** provides a USB portable charger for charging smartphones, tablets, and other rechargeable electronic devices. Operation indicator

certain smartphones that require it. The USB charge circuit **52** allows the internal lithium battery pack **32** to be charged using a standard USB charger. This charge input uses a standard micro-USB connector **48** allowing standard cables to be used. The 5V potential provided from standard USB chargers is up-converted to the 12.4 VDC voltage required for charging the internal lithium battery pack using a DC-DC converter **49**. The DC-DC converter **49** can be turned on and off via circuit **53** by an output from the microcontroller **1**.

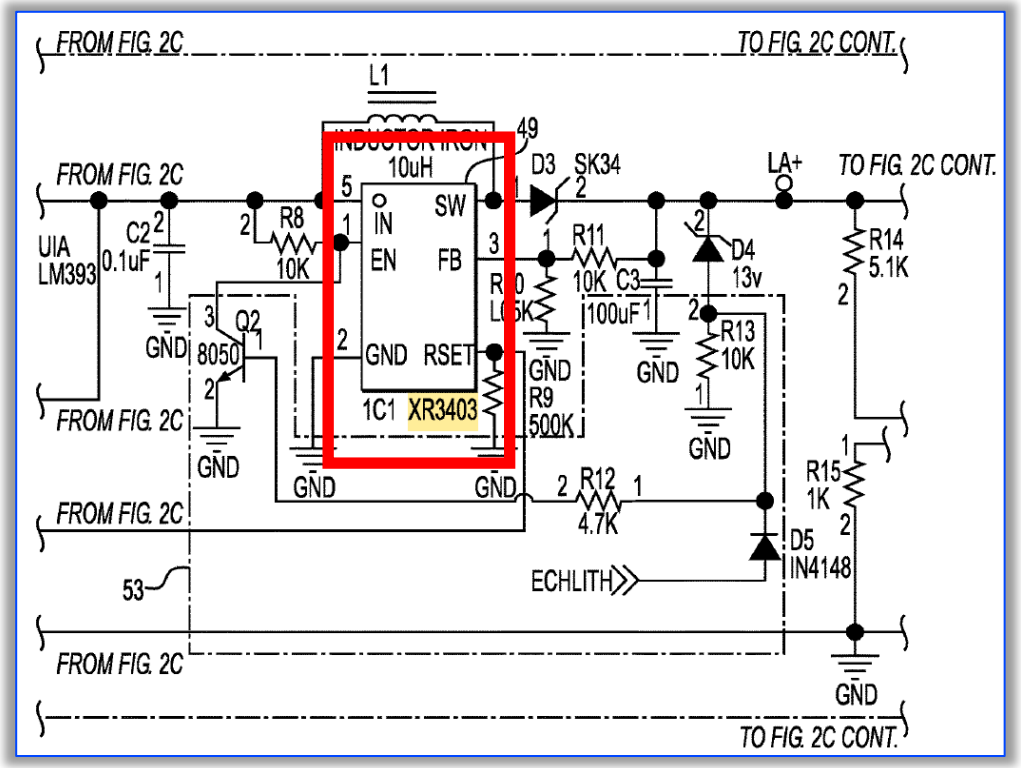

EX1001 ('023), 5:15-17, 7:21-29, Fig. 2C;
'023 Paper 6, pp. 8-9; '023 Paper 15, p. 9
EX1001 ('243), 5:24-26, 7:32-38, Fig. 2C;
'243 Paper 1, pp. 7-8; '243 Paper 14, pp. 8-9

’023 Patent Claims

Claim 1 Preamble	A jump starting apparatus configured for boosting or charging a depleted or discharged battery having a positive polarity battery terminal and a negative polarity battery terminal, the jump starting apparatus comprising:
Limitation 1(a)	a power supply;
Limitation 1(b)	a positive polarity battery terminal connector configured for connecting the jump starting apparatus to the positive polarity battery terminal of the depleted or discharged battery;
Limitation 1(c)	a negative polarity battery terminal connector configured for connecting the jump starting apparatus to the negative polarity battery terminal of the depleted or discharged battery;
Limitation 1(d)	a power switch or circuit configured to turn on power from the power supply to the positive and negative polarity battery terminal connectors;
Limitation 1(e)	a control system or circuit connected to and controlling the power switch, the control system or circuit configured to detect whether the positive and negative polarity battery terminal connectors have a correct polarity connection with the positive and negative polarity battery terminals of the depleted or discharged battery prior to turning on the power switch or circuit;
Limitation 1(f)	**a USB input circuit connected to the power supply, the USB input circuit configured for converting power from a USB power source to increase power voltage to the power supply; and**
Limitation 1(g)	**a USB input connector connected to the USB input circuit, the USB input connector configured for connecting to the USB power source and providing power input from the USB power source through the USB input connector and the USB input circuit to the power supply.**

EX1001 (’023), claim 1;
’023 Paper 6, claim listing

’243 Patent Claims

Claim 1 Preamble	A jump starting device for boosting or charging a depleted or discharged battery having a positive battery terminal and a negative battery terminal, the jump starting device comprising:
Limitation 1(a)	a power supply;
Limitation 1(b)	a positive battery connector for electrically connecting the jump starting device to the positive battery terminal of the depleted or discharged battery;
Limitation 1(c)	a negative battery connector for electrically connecting the jump starting device to the negative battery terminal of the depleted or discharged battery;
Limitation 1(d)	a power switch or switch circuit connected in circuit with the power supply and the positive and negative battery connectors,
Limitation 1(e)	the power switch or switch circuit configured to switch power on from the power supply to boost or charge the depleted or discharged battery when connected between the positive and negative battery connectors;
Limitation 1(f)	**a USB input connector; and**
Limitation 1(g)	**a USB charge circuit electrically connecting the USB input connector to the power supply, the USB charge circuit comprising a DC-DC converter configured to upconvert voltage from the USB input connector to the power supply.**

EX1001 (’243), claim 1;
’243 Paper 1, claim listing

Limitations in Dispute – ’023 Patent

- **<u>’023 Patent</u>: Independent claims 1, 38, 39, 47, 52, and 54 and Dependent Claim 32**
  - **Ground 1:**
    - NOCO does not dispute that Richardson and Zhao teach all limitations of the challenged claims.
    - NOCO only disputes motivation to combine the “USB input circuit” and “USB input connectors” of Zhao with the portable jump starter of Richardson.
  - **Ground 2:**
    - NOCO does not dispute that Yu and Paparrizos teach all limitations of all independent claims except claim 52
    - NOCO only disputes motivation to combine the “USB input circuit” and “USB input connectors” of Paparrizos with the portable jump starter of Yu.
    - NOCO also disputes that Yu and Paparrizos teach a DC-DC converter being turned on and off by a microprocessor as required by independent claim 52 and dependent claim 32.

Limitations in Dispute – ’243 Patent

- **<u>’243 Patent</u>: Independent Claims 1 and 57 and Dependent Claims 2, 15, 17, 18, 51, and 54**
  - **Ground 1:**
    - NOCO does not dispute that Richardson and Zhao teach all limitations of the challenged claims.
    - NOCO only disputes motivation to combine the “USB input circuit” and “USB input connectors” of Zhao with the portable jump starter of Richardson.
  - **Ground 3:**
    - NOCO does not dispute that Yu and Paparrizos teach all limitations of all independent claims.
    - NOCO only disputes motivation to combine the “USB input circuit” and “USB input connectors” of Paparrizos with the portable jump starter of Yu.
  - **Grounds 2/4:**
    - NOCO does not separately dispute any limitations or dependent claims in Grounds 2 and 4 relating to Dao

Grounds of Unpatentability

’023 – Grounds of Unpatentability

- **Ground 1:** **Claims 1, 32, 38, 39, 47, 52, and 54** are unpatentable under 35 U.S.C. § 103(a) in view of Richardson and Zhao
- **Ground 2:** **Claims 1, 32, 38, 39, 47, 52, and 54** are unpatentable under 35 U.S.C. § 103(a) in view of Yu and Paparrizos

’023 Paper 6, pp. 7-8

’243 – Grounds of Unpatentability

- **Ground 1: Claims 1 and 2** are unpatentable under 35 U.S.C. § 103(a) in view of Richardson and Zhao
- **Ground 2: Claims 15, 17, 18, 51, 54, and 57** are unpatentable under 35 U.S.C. § 103(a) in view of Richardson, Zhao, and Dao
- **Ground 3: Claims 1, 2, 15, 17, 18, and 57** are unpatentable under 35 U.S.C. § 103(a) in view of Yu and Paparrizos
- **Ground 4: Claims 15, 17, 18, 51, 54, and 57** are unpatentable under 35 U.S.C. § 103(a) in view of Yu, Paparrizos, and Dao

’243 Paper 1, pp. 6-7

Ground 1: Obviousness in view of Richardson and Zhao

Richardson

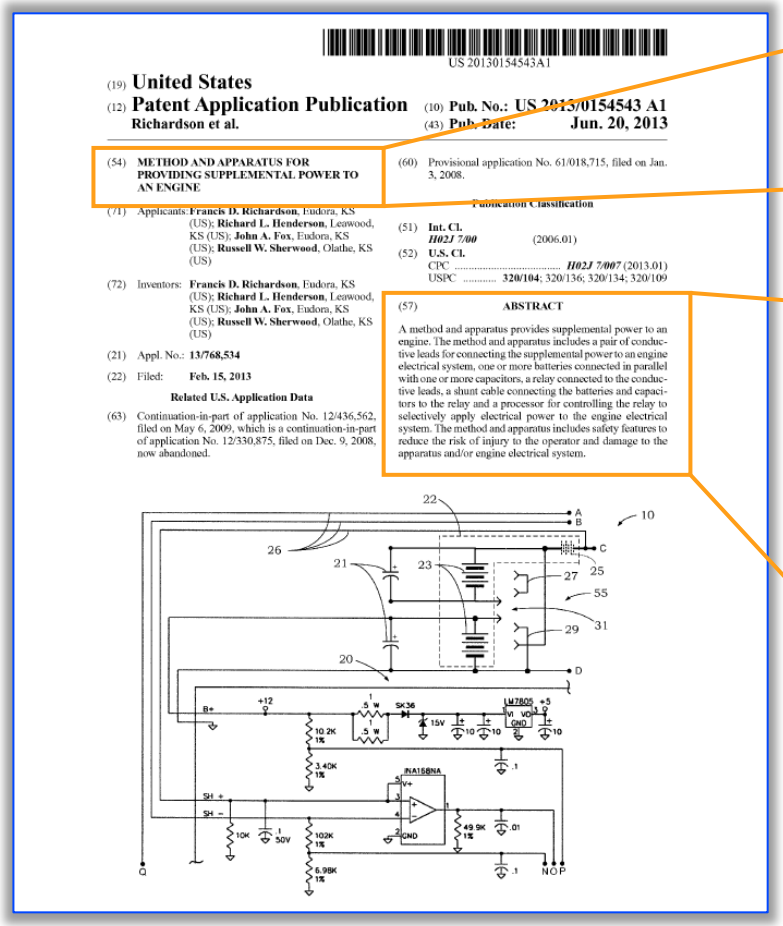

US 20130154543A1

(19) United States

(12) Patent Application Publication

Richardson et al.

(10) Pub. No.: US 2013/0154543 A1

(43) Pub. Date: Jun. 20, 2013

(54) METHOD AND APPARATUS FOR PROVIDING SUPPLEMENTAL POWER TO AN ENGINE

(71) Applicants: **Francis D. Richardson**, Eudora, KS (US); **Richard L. Henderson**, Leawood, KS (US); **John A. Fox**, Eudora, KS (US); **Russell W. Sherwood**, Olathe, KS (US)

(72) Inventors: **Francis D. Richardson**, Eudora, KS (US); **Richard L. Henderson**, Leawood, KS (US); **John A. Fox**, Eudora, KS (US); **Russell W. Sherwood**, Olathe, KS (US)

(21) Appl. No.: **13/768,534**

(22) Filed: **Feb. 15, 2013**

Related U.S. Application Data

(63) Continuation-in-part of application No. 12/436,562, filed on May 6, 2009, which is a continuation-in-part of application No. 12/330,875, filed on Dec. 9, 2008, now abandoned.

(60) Provisional application No. 61/018,715, filed on Jan. 3, 2008.

Publication Classification

(51) **Int. Cl.**
H02J 7/00 (2006.01)

(52) **U.S. Cl.**
CPC ***H02J 7/007*** (2013.01)
USPC **320/104**; 320/136; 320/134; 320/109

(57) **ABSTRACT**

A method and apparatus provides supplemental power to an engine. The method and apparatus includes a pair of conductive leads for connecting the supplemental power to an engine electrical system, one or more batteries connected in parallel with one or more capacitors, a relay connected to the conductive leads, a shunt cable connecting the batteries and capacitors to the relay and a processor for controlling the relay to selectively apply electrical power to the engine electrical system. The method and apparatus includes safety features to reduce the risk of injury to the operator and damage to the apparatus and/or engine electrical system.

(54) **METHOD AND APPARATUS FOR PROVIDING SUPPLEMENTAL POWER TO AN ENGINE**

(57) **ABSTRACT**

A method and apparatus provides supplemental power to an engine. The method and apparatus includes a pair of conductive leads for connecting the supplemental power to an engine electrical system, one or more batteries connected in parallel with one or more capacitors, a relay connected to the conductive leads, a shunt cable connecting the batteries and capacitors to the relay and a processor for controlling the relay to selectively apply electrical power to the engine electrical system. The method and apparatus includes safety features to reduce the risk of injury to the operator and damage to the apparatus and/or engine electrical system.

EX1005, (54) & (57);
'023 Paper 6, pp. 19-20;
'243 Paper 1, p. 15

Richardson

SUMMARY

[0006] The present invention provides an apparatus and method for temporarily delivering supplemental power to the electrical system of a vehicle. The apparatus and method performs real-time monitoring of all system parameters to increase the safety and effectiveness of the unit's operation while providing additional parametric and diagnostic information obtained before, during and after the vehicle starting operation.

[0007] The present invention monitors the voltage of the battery of the vehicle to be jump started and the current delivered by the jump starter batteries and capacitors to determine if a proper connection has been established and to provide fault monitoring. For safety purposes, only if the proper polarity is detected can the system operate. The voltage is monitored to determine open circuit, disconnected conductive clamps, shunt cable fault, and solenoid fault conditions. The current through the shunt cable is monitored to determine if there is a battery explosion risk, and for excessive current conditions presenting an overheating condition, which may result in fire. The system includes one or more internal batteries and capacitors to provide the power to the battery of the vehicle to be jump started. Once the vehicle is started, the vehicle's electrical system may recharge the batteries and capacitors before the unit automatically electrically disconnects from the vehicle's battery.

EX1005, [0006]-[0007];
'023 Paper 6, pp. 19-20; '023 Paper 15, p. 10
'243 Paper 1, p. 15; '243 Paper 14, pp. 9-10

Richardson

[0034] If one of the push buttons **42** or **44** has been selected, the system will compare the operator-configured starter voltage against the voltage of the vehicle to be started **28**. The jump starter **10** may be configured for 12, 18, 24, 30, 36, 42 or 48 volts, for example, using a selector jumper **55**. For example, if the batteries **23** are both 12-volt batteries, the system may be configured for 12- or 24-volt operation. For example, if jumper **27** is placed across terminals **31**, the 24-volt configuration may be selected. If jumper **29** is placed across terminals **31**, the 12-volt configuration may be selected. If the batteries **23** are 12-volt batteries and a battery **25** is a 6-volt battery, 18- or 30-volt configurations may be provided. For example, if jumper **27** is placed across terminals **31**, the 30-volt configuration may be selected. If jumper **29** is placed across terminals **31**, the 18-volt configuration may be selected. It should be understood that two or more batteries of the same or different voltage levels may be used to meet the voltage requirements of the vehicle to be started. If the difference between the voltage selected and the voltage measured is not within a predetermined range and tolerance **252**, a "Wrong Selector Volts" message is displayed **254** on the LCD **46** and further operation is prohibited until the correct voltage is selected **256** at which point processing returns to the main processing loop **210**.

EX1005, [0034];
'023 Paper 6, pp. 31, 52, 54;
'023 Paper 15, pp. 10-11
'243 Paper 1, pp. 25, 50
'243 Paper 14, pp. 9-11

Richardson

[0055] Referring to FIGS. **1** and **2**, a diode **35** may be connected across the contact **34** to charge the capacitors **21** and jump starter batteries **22** from the vehicle charging system **28**. The charging system of the vehicle may be used to charge the capacitors **21** and jump starter batteries **22**. Whenever the vehicle has a working charging system this will occur as long as the cables are connected to the vehicle. This allows the capacitors **21** and jump starter batteries **22** to be fully recharged in about 1 to 5 minutes and can therefore start many vehicles in a row without becoming discharged. Even in situations in which the jump starter batteries **22** may be discharged to an extent that they alone may not be able to provide the necessary power to start a vehicle, the capacitors **21** may be rapidly recharged to start many vehicles in a row. This is very useful when starting fleets of vehicles with dead batteries.

EX1005, [0055];
'023 Paper 15, pp. 11-13;
'243 Paper 14, pp. 11-12
EX1044, ¶ 14

Richardson

1. A method for delivering supplemental power from a portable jump starter to an engine comprising the steps of:

positioning said portable jump starter proximate the engine;

temporarily manually connecting conductive leads from said portable jump starter to the electrical system of the engine;

automatically selecting a voltage output of one or more system batteries housed in said portable jump starter and one or more system capacitors housed in said portable jump starter,

verifying the polarity of the conductive leads;

providing an alert if said polarity is incorrect;

assessing the voltage level of said electrical system;

applying power from said system batteries and said system capacitors to said electrical system;

monitoring the current output of said system batteries and said system capacitors;

measuring one or more voltage levels to determine one or more fault conditions;

examining the current through a shunt cable; and

electrically disconnecting said conductive leads from said electrical system when the engine starts.

26. A portable jump starter for delivering supplemental power to an engine comprising:

a pair of conductive leads for temporarily connecting the jump starter to an electrical system of the engine;

one or more jump starter batteries;

one or more jump starter capacitors connected in parallel to said one or more jump starter batteries;

a relay connected to said conductive leads;

a shunt cable connecting said jump starter batteries and said jump starter capacitors to said relay; and

a processor for controlling said relay to selectively apply electrical power from said jump starter batteries and said jump starter capacitors to said electrical system of the engine.

EX1005, Claims 1 and 26;
’023 Paper 15, p. 10;
’243 Paper 14, pp. 9-10

Richardson

The Board has already found, and NOCO does not dispute, that Richardson discloses all limitations of the challenged claims aside from the USB limitations.

Claim 1 Preamble	**A jump starting apparatus configured for boosting or charging a depleted or discharged battery having a positive polarity battery terminal and a negative polarity battery terminal, the jump starting apparatus comprising:**
Limitation 1(a)	**a power supply;**
Limitation 1(b)	**a positive polarity battery terminal connector configured for connecting the jump starting apparatus to the positive polarity battery terminal of the depleted or discharged battery;**
Limitation 1(c)	**a negative polarity battery terminal connector configured for connecting the jump starting apparatus to the negative polarity battery terminal of the depleted or discharged battery;**
Limitation 1(d)	**a power switch or circuit configured to turn on power from the power supply to the positive and negative polarity battery terminal connectors;**
Limitation 1(e)	**a control system or circuit connected to and controlling the power switch, the control system or circuit configured to detect whether the positive and negative polarity battery terminal connectors have a correct polarity connection with the positive and negative polarity battery terminals of the depleted or discharged battery prior to turning on the power switch or circuit;**
Limitation 1(f)	a USB input circuit connected to the power supply, the USB input circuit configured for converting power from a USB power source to increase power voltage to the power supply; and
Limitation 1(g)	a USB input connector connected to the USB input circuit, the USB input connector configured for connecting to the USB power source and providing power input from the USB power source through the USB input connector and the USB input circuit to the power supply.

’023 Paper 8, pp. 24-38; ’243 Paper 7, pp. 24-28

Zhao

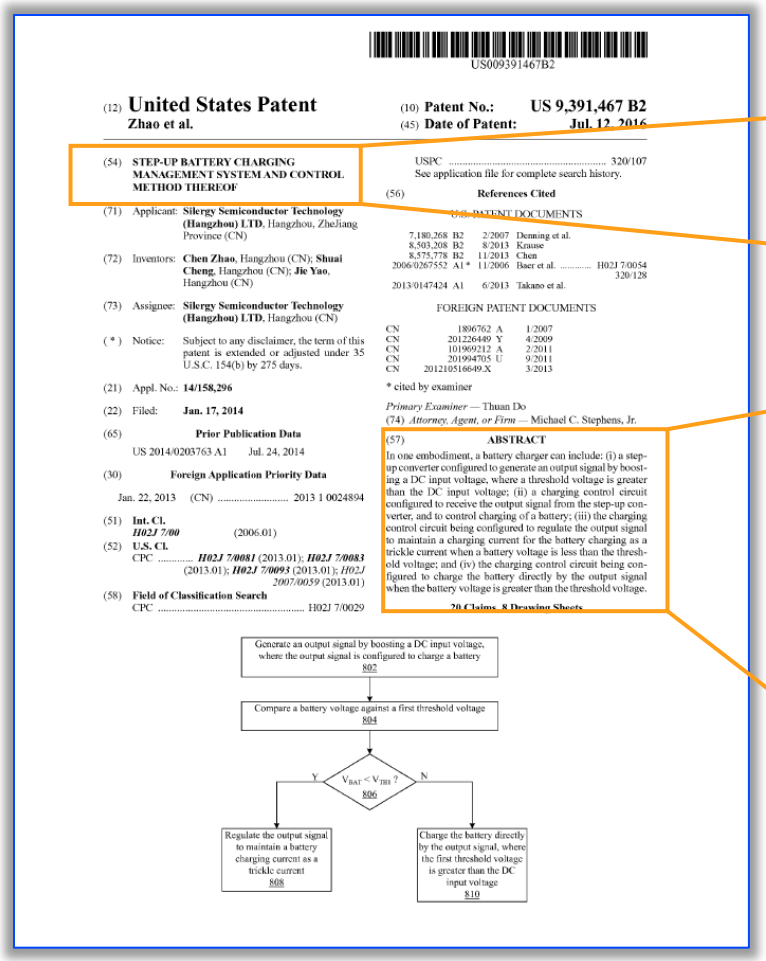

US009391467B2

(12) **United States Patent**
Zhao et al.

(10) **Patent No.: US 9,391,467 B2**
(45) **Date of Patent: Jul. 12, 2016**

(54) **STEP-UP BATTERY CHARGING MANAGEMENT SYSTEM AND CONTROL METHOD THEREOF**

(71) Applicant: **Silergy Semiconductor Technology (Hangzhou) LTD**, Hangzhou, ZheJiang Province (CN)

(72) Inventors: **Chen Zhao**, Hangzhou (CN); **Shuai Cheng**, Hangzhou (CN); **Jie Yao**, Hangzhou (CN)

(73) Assignee: **Silergy Semiconductor Technology (Hangzhou) LTD**, Hangzhou (CN)

(*) Notice: Subject to any disclaimer, the term of this patent is extended or adjusted under 35 U.S.C. 154(b) by 275 days.

(21) Appl. No.: **14/158,296**

(22) Filed: **Jan. 17, 2014**

(65) **Prior Publication Data**

US 2014/0203763 A1 Jul. 24, 2014

(30) **Foreign Application Priority Data**

Jan. 22, 2013 (CN) 2013 1 0024894

(51) **Int. Cl.**
H02J 7/00 (2006.01)

(52) **U.S. Cl.**
CPC ***H02J 7/0081*** (2013.01); ***H02J 7/0083*** (2013.01); ***H02J 7/0093*** (2013.01); *H02J 2007/0059* (2013.01)

(58) **Field of Classification Search**
CPC H02J 7/0029
USPC 320/107
See application file for complete search history.

(56) **References Cited**

U.S. PATENT DOCUMENTS

7,180,268	B2	2/2007	Denning et al.	
8,503,208	B2	8/2013	Krause	
8,575,778	B2	11/2013	Chen	
2006/0267552	A1 *	11/2006	Baer et al.	H02J 7/0054 320/128
2013/0147424	A1	6/2013	Takano et al.	

FOREIGN PATENT DOCUMENTS

CN	1896762	A	1/2007
CN	201226449	Y	4/2009
CN	101969212	A	2/2011
CN	201994705	U	9/2011
CN	201210516649.X		3/2013

* cited by examiner

Primary Examiner — Thuan Do
(74) *Attorney, Agent, or Firm* — Michael C. Stephens, Jr.

(57) **ABSTRACT**

In one embodiment, a battery charger can include: (i) a step-up converter configured to generate an output signal by boosting a DC input voltage, where a threshold voltage is greater than the DC input voltage; (ii) a charging control circuit configured to receive the output signal from the step-up converter, and to control charging of a battery; (iii) the charging control circuit being configured to regulate the output signal to maintain a charging current for the battery charging as a trickle current when a battery voltage is less than the threshold voltage; and (iv) the charging control circuit being configured to charge the battery directly by the output signal when the battery voltage is greater than the threshold voltage.

20 Claims, 8 Drawing Sheets

(54) **STEP-UP BATTERY CHARGING MANAGEMENT SYSTEM AND CONTROL METHOD THEREOF**

(57) **ABSTRACT**

In one embodiment, a battery charger can include: (i) a step-up converter configured to generate an output signal by boosting a DC input voltage, where a threshold voltage is greater than the DC input voltage; (ii) a charging control circuit configured to receive the output signal from the step-up converter, and to control charging of a battery; (iii) the charging control circuit being configured to regulate the output signal to maintain a charging current for the battery charging as a trickle current when a battery voltage is less than the threshold voltage; and (iv) the charging control circuit being configured to charge the battery directly by the output signal when the battery voltage is greater than the threshold voltage.

EX1006, (54) & (57);
’023 Paper 6, pp. 20-21;
’243 Paper 1, p. 15

Zhao

BACKGROUND

Battery charging systems typically utilize a step-down topology, with an input supplied by a power supply adapter, and an output coupled to a single-cell battery, or multi-cell batteries. A universal serial bus (USB) power supply system usually has a rating power supply voltage of 5V. A single-cell lithium battery can employ such step-down topology to charge the single-cell battery. Step-up topology can be used in battery management systems with series connected multi-cell lithium batteries. However, in some circumstances, such as high input current or short-circuit at the output, if relatively large current is used directly for charging, the electronic device and/or its battery can be damaged.

SUMMARY

In one embodiment, a battery charger can include: (i) a step-up converter configured to generate an output signal by boosting a DC input voltage, where a threshold voltage is greater than the DC input voltage; (ii) a charging control circuit configured to receive the output signal from the step-up converter, and to control charging of a battery; (iii) the charging control circuit being configured to regulate the output signal to maintain a charging current for the battery charging as a trickle current when a battery voltage is less than the threshold voltage; and (iv) the charging control circuit being configured to charge the battery directly by the output signal when the battery voltage is greater than the threshold voltage.

In one embodiment, a method of controlling charging of a battery can include: (i) boosting, by a step-up converter, a DC input voltage to generate an output signal configured to charge a battery; (ii) comparing a battery voltage against a threshold voltage, where the threshold voltage is greater than the DC input voltage; (iii) regulating the output signal to maintain a battery charging current to be a trickle current when the battery voltage is less than the threshold voltage; and (iv) charging the battery directly by the output signal when the battery voltage is greater than the threshold voltage.

EX1006, 1:18-55;
’023 Paper 6, pp. 20, 31, 43; ’023 Paper 15, pp. 14-15
’243 Paper 1, pp. 15, 25-26, 35-37; ’243 Paper 14, pp. 14-15

Zhao

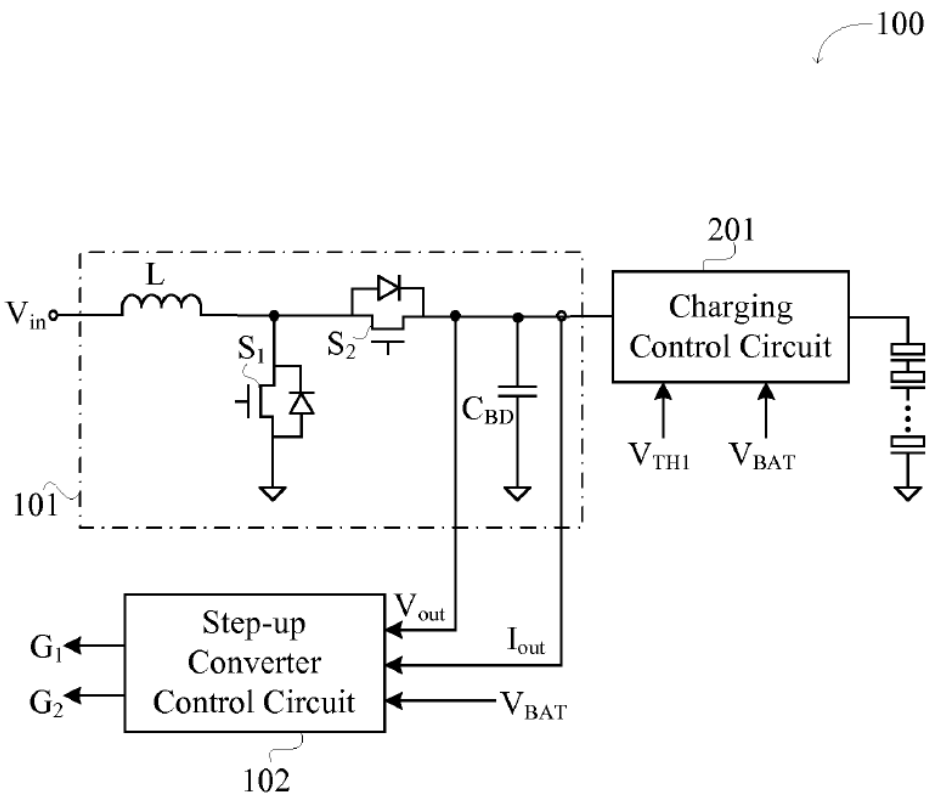

FIG. 1

Referring now to FIG. **1**, shown is a schematic block diagram of a first example step-up battery charger or charging management system **100**, in accordance with embodiments of the present invention. This example battery charger can include a step-up converter and charging control circuit **201**.

The step-up converter can receive DC input voltage V_{in} and may generate an output signal by boosting DC input voltage V_{in}. The output signal from the step-up converter can be received by charging control circuit **201**, and may be further regulated or controlled for purposes of charging the battery or battery device. The output of charging control circuit **201** can charge a plurality of series connected (e.g., lithium) batteries, as shown. For example, DC input voltage V_{in} can be provided to the step-up converter by a universal serial bus (USB) charger, or any other suitable low voltage power supply system.

EX1006, Fig 1, 2:63-3:11;
'023 Paper 6, pp. 20, 25, 31, 43-45;
'243 Paper 1, pp. 15, 25-26, 35-37;

Zhao

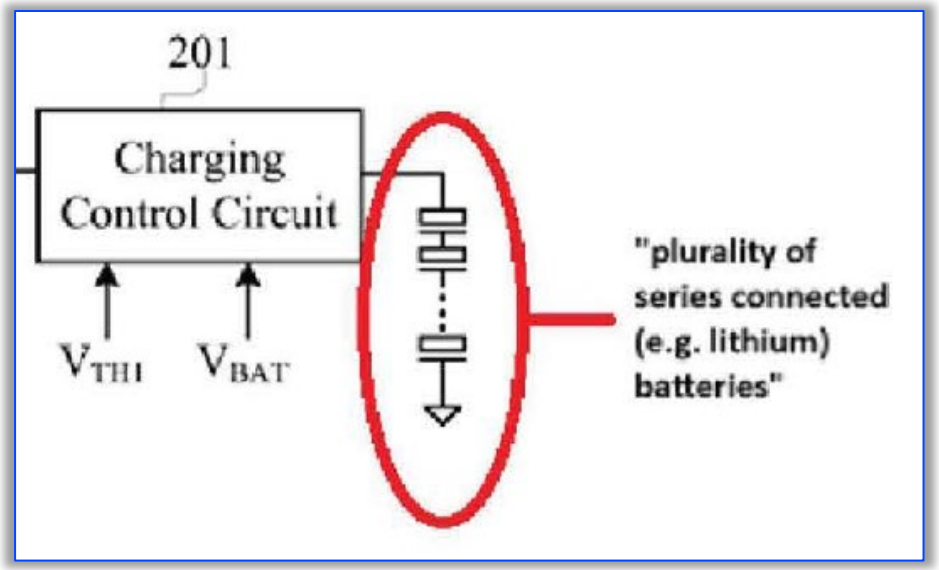

battery device. When battery voltage V_{BAT} is greater than threshold voltage V_{TH1} but less than final voltage V_{CV} (e.g., final voltage V_{CV} can be about 8.4V if two lithium batteries are connected in series), step-up converter control circuit **102** can maintain output current I_{out} at a predetermined operating current (e.g., when the predetermined operating current is about 2 A, the corresponding trickle current can be about 200 mA), so as to charge the battery device with a substantially constant current.

EX1006, Fig 1, 4:40-41;
'023 Paper 6, p. 43; '023 Paper 15, pp. 13-14;
'243 Paper 1, p. 40; '243 Paper 14, pp. 13-14

Zhao

Dr. Fayed:

19 Q. And so there's this three dots here or
20 ellipses in the pack which suggests that we could
21 add even more cells, connect them in series if we
22 wanted to?

48

1 A. That's what that normally indicates in
2 schematics, correct.
3 Q. Okay. So our pack voltage could actually
4 go -- could go up above 12.6 volts here if we wanted
5 it to?
6 A. Yeah. If somebody is gonna use that circuit
7 and choose to add more cells, they could do that,
8 yes. Or that figure leaves the room for doing that,
9 yes.

EX1045, 47:19-48:9;
'023 Paper 15, p. 14;
'243 Paper 14, p. 14

Motivation to Combine

- A PHOSITA would have been motivated to modify the design of Richardson's jump starter to **either**:
  1. Replace the existing charging circuitry with Zhao's step-up charging system and connect the output to Richardson's jump starter batteries

     or

  2. Add Zhao's step-up charging system and connect the output to Richardson's jump starter batteries as an additional and alternative pathway for charging the jump starter batteries

'023 Paper 6, p. 45; EX1003 ('023), ¶ 88;
'243 Paper 1, p. 42; EX1003 ('243), ¶ 100

Motivation to Combine

1. Reducing the need for proprietary chargers
2. Universal power source
3. Ease of use
4. Durability

EX1003 ('023), ¶ 89; '023 Paper 6, p. 46;
EX1003 ('243), ¶ 92; '243 Paper 1, pp. 36-37

Motivation to Combine – USB Specification

1.2 Background

The USB port on personal computers is a convenient place for portable devices to draw current for charging their batteries. This convenience has led to the creation of dedicated chargers that simply expose a downstream USB port. This allows portable devices to use the same USB cable to charge from either a PC or from a dedicated charger.

EX1025, p. 6;
'023 Paper 6, p. 46;
'243 Paper 1, p. 37

Motivation to Combine – Zhou

BACKGROUND

[0001] Rechargeable lithium ion (Li-ion) batteries have become standard in portable computing devices, such as laptops, tablets, and smart phones. Consumers expect powerful mobile devices that can operate for extended periods of time from a battery source. Li-ion batteries have proven to be very effective for these applications.

[0002] In order to achieve the greatest user convenience, modern mobile devices should support five volt and universal serial bus (USB) charging. Such charging systems may use a boost circuit followed by a buck charging circuit, and are unable to sense a status of a five volt power rail for the USB. Instead, typical charging systems only sense the boost circuit high voltage power rail. Charging circuits that only sense the boost circuit high voltage power rail may have a low power utilization efficiency, because the charging circuit must account for multiple factors and tolerances to avoid damage from over current/over voltage inputs.

EX1016, [0001]-[0002];
'023 Paper 6, p. 46;
EX1003 ('023), ¶ 89;
'243 Paper 1, pp. 37, 42
EX1003 ('243), ¶ 92

Motivation to Combine – Paparrizos

BUCK BOOST CHARGING FOR BATTERIES

BACKGROUND

Unless otherwise indicated herein, the approaches described in this section are not prior art to the claims in this application and are not admitted to be prior art by inclusion in this section.

Computer tablets and other mobile devices, such as mobile phones, digital SLR cameras, video recorders, audio devices, and so on are moving to battery packs with two (or more) Li-ion cells in series (so-called "2S" or "3S" stacks or cells). Battery voltages of multi-stack battery packs typically range from 3.0V to 8.4V. Such devices typically are provided with their own power adapters for charging the high voltage battery packs.

The USB specification has become very popular and consumers have become used to being able to charge their USB devices from universal USB power sources. Consumers are used to USB, mini-USB, and micro-USB connectors being present in portable electronics and their use for battery charging from a USB power source. However, since a large majority of USB devices are defined at 5V, it may not be possible to charge high voltage (>5V) 2S or 3S battery packs using a typically USB power source.

EX1009, 1:1-23;
'023 Paper 6, pp. 22, 47, 51, 67-68;
'243 Paper 1, pp. 17, 35, 37, 58-59

Motivation to Combine – Consumer Demand

The electronic content in modern cars has increased tremendously thanks to the demand for in-car entertainment ("infotainment") systems and features, such as docking for smartphones, USB ports, and satellite radios. The latest cars also are expected to boast GPS navigation systems with mapping capabilities, interior and exterior LED lighting, and other sophisticated features.

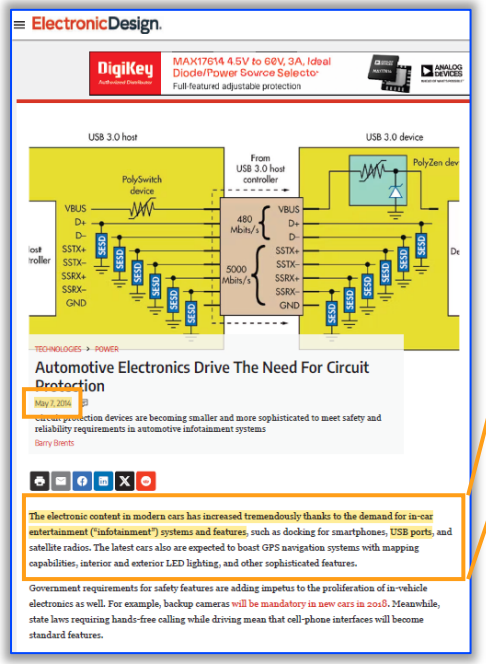
ElectronicDesign.

DigiKey MAX17614 4.5V to 60V, 3A, Ideal Diode/Power Source Selector Full-featured adjustable protection

TECHNOLOGIES > POWER

Automotive Electronics Drive The Need For Circuit Protection

May 2, 2016

Circuit protection devices are becoming smaller and more sophisticated to meet safety and reliability requirements in automotive infotainment systems

Barry Brents

The electronic content in modern cars has increased tremendously thanks to the demand for in-car entertainment ("infotainment") systems and features, such as docking for smartphones, USB ports, and satellite radios. The latest cars also are expected to boast GPS navigation systems with mapping capabilities, interior and exterior LED lighting, and other sophisticated features.

Government requirements for safety features are adding impetus to the proliferation of in-vehicle electronics as well. For example, backup cameras will be mandatory in new cars in 2018. Meanwhile, state laws requiring hands-free calling while driving mean that cell-phone interfaces will become standard features.

USB 3.0 ports are now common in cars.

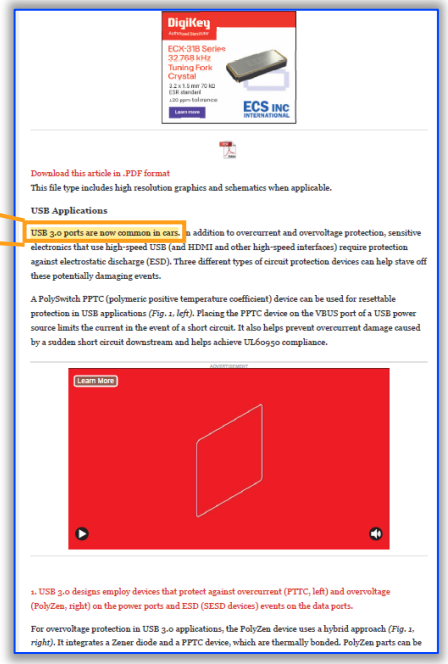
DigiKey

ECX-31B Series 32.768 kHz Tuning Fork Crystal

ECS INC INTERNATIONAL

Download this article in .PDF format

This file type includes high resolution graphics and schematics when applicable.

USB Applications

USB 3.0 ports are now common in cars. In addition to overcurrent and overvoltage protection, sensitive electronics that use high-speed USB (and HDMI and other high-speed interfaces) require protection against electrostatic discharge (ESD). Three different types of circuit protection devices can help stave off these potentially damaging events.

A PolySwitch PPTC (polymeric positive temperature coefficient) device can be used for resettable protection in USB applications (*Fig. 1, left*). Placing the PPTC device on the VBUS port of a USB power source limits the current in the event of a short circuit. It also helps prevent overcurrent damage caused by a sudden short circuit downstream and helps achieve UL60950 compliance.

Learn More

1. USB 3.0 designs employ devices that protect against overcurrent (PPTC, left) and overvoltage (PolyZen, right) on the power ports and ESD (SESD devices) events on the data ports.

For overvoltage protection in USB 3.0 applications, the PolyZen device uses a hybrid approach (*Fig. 1, right*). It integrates a Zener diode and a PPTC device, which are thermally bonded. PolyZen parts can be

EX1029, pp. 1-2; '023 Paper 6, p. 47; '243 Paper 1, p. 37

Motivation to Combine – Consumer Demand

USA TODAY

CARS

Newest VW lacks USB, only iPhones welcome

James R. Healey USAToday

Published 7:46 p.m. ET July 8, 2014 | Updated 9:14 p.m. ET July 8, 2014

The 2015 Volkswagen Golf, one of the brand's most important vehicles, lacks a simple USB connection for phones and music devices, even though a significant number of shoppers considers that the most important feature a car can have.

The seventh-generation Golf won't get a USB plug until the 2016 models next year, VW says.

Meantime, the 2015s have only a so-called dongle with an Apple phone Lightning plug. That fits only the latest-generation iPhones, though it can be used with older iPhones via an obscure adapter.

Lack of an ordinary USB connection, which is all-but-standard on vehicles sold on the U.S., denies owners the full use of Android or Windows phones, and iPod-style music devices.

In a survey last month by Kelley Blue Book's kbb.com, a car-shopping and research site, car shoppers said they consider "USB/auxiliary ports" the No. 1 "must-have" feature in new cars. The USB/aux outpaced the likes of backup cameras (39%), Bluetooth (39%), premium sound system (33%) and collision sensors (25%) as the most-demanded feature.

VW's U.S. representatives say they have no good explanation for lack of a USB, and haven't gotten a full explanation yet from German headquarters.

Theoretically, then, the omission of such a simple feature means that more than four of every 10 shoppers could consider VW's feature omission a deal-breaker and move on to other models on their shopping lists.

VW needs none of that rejection.

VW-brand sales the first half are down 13.4% from last year's tally, well under-performing the U.S. new-vehicle market, which is up 4.3% the first six months this year.

In a survey last month by Kelley Blue Book's kbb.com, a car-shopping and research site, car shoppers said they consider "USB/auxiliary ports" the No. 1 "must-have" feature in new cars. The USB/aux outpaced the likes of backup cameras (39%), Bluetooth (39%), premium sound system (33%) and collision sensors (25%) as the most-demanded feature.

EX1030, p. 1;
’023 Paper 6, p. 47;
’243 Paper 1, p. 37

Motivation to Combine

(19) China National Intellectual Property Administration

[logo] (12) Utility Model Patent

(10) Authorization announcement number CN 203788026 U

(45) Authorization publication date 20Aug2014

(21) Application No. 201420192757.0

(22) Application date 04/18/2014

(73) Patentee Wang Chunlai

Address Rooms 511-512, 5/F, No. 3 Integrated Office Building, Xinghui Science and Technology Industrial Park, West Huaning Road, Dalang Community, Dalang Street, Longhua New District, Shenzhen, Guangdong Province, 518000

(72) Inventor Wang Chunlai

(74) Patent agency Shenzhen Zhongyi Patent and Trademark Firm 44237

Agent Zhang Quanwen

(51) Int. Cl.

H02J 7/00 (2006.01)

Claims 1 Page Specification 3 Pages Attached drawings 1 Page

(54) Name of utility model

Emergency automotive starter power supply

(57) Abstract

The present utility model belongs to the field of mobile power supply, and in particular relates to an emergency automotive starter power supply. It includes a circuit board, a battery pack connected to the circuit board, and an output interface for the emergency starting of automobiles connected to the battery pack. The emergency automotive starter power supply further comprises: a voltage booster circuit, and the input end of said voltage booster circuit uses a USB interface for charging input, while the output end of the voltage booster circuit is connected to the circuit board, or, the voltage booster circuit is integrated on the circuit board as a module. The emergency automotive starter power supply charges via the USB interface and can accommodate a variety of chargers that use the USB power supply specification for charging. Through the USB interface, the user can even charge the emergency automotive starter power supply using a common universal mobile communication device charger, without carrying other types of chargers, so as to facilitate user use.

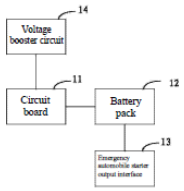

CN 203788026 U

(22) **Application date** 04/18/2014

(57) Abstract

The present utility model belongs to the field of mobile power supply, and in particular relates to an emergency automotive starter power supply. It includes a circuit board, a battery pack connected to the circuit board, and an output interface for the emergency starting of automobiles connected to the battery pack. The emergency automotive starter power supply further comprises: a voltage booster circuit, and the input end of said voltage booster circuit uses a USB interface for charging input, while the output end of the voltage booster circuit is connected to the circuit board, or, the voltage booster circuit is integrated on the circuit board as a module. The emergency automotive starter power supply charges via the USB interface and can accommodate a variety of chargers that use the USB power supply specification for charging. Through the USB interface, the user can even charge the emergency automotive starter power supply using a common universal mobile communication device charger, without carrying other types of chargers, so as to facilitate user use.

EX1023, p. 1;
’023 Paper 6, p. 49;
’243 Paper 1, p. 39

Motivation to Combine

[0003] The embodiment of the present utility model provide an emergency automotive starter power supply, aiming to provide an emergency automotive starter power supply that can be charged through a USB interface. It can accept charging using a charger designed in compliance with the USB power supply specification. It accepts 5V current input at minimum that complies with the USB power supply specification. When the emergency automotive starter power supply is out of power and the user does is not carrying a specialized charger, the user can charge the emergency automotive starter power supply using a common universal mobile communication device charger through the USB interface, so as to facilitate user use.

[0017] The present utility model provides an emergency automotive starter power supply configured with a USB charging interface. The emergency automotive starter power supply can be charged using a charger of commonly used smart devices. The USB charging interface of the emergency automotive starter power supply receives the charging input and the voltage booster circuit boosts the voltage to the 10V to 30V normally used by the emergency automotive starter power supply for charging the emergency automotive starter power supply. This avoids the need to configure a specialized charger separately when charging the emergency automotive starter power supply, improving convenience of charging the emergency automotive starter power supply, and enhancing portability of the emergency automotive starter power supply. This greatly increases the range of use of the emergency automotive starter power supply, making it easier for users to use the emergency automotive starter power supply.

EX1023, [0003], [0017];
’023 Paper 6, p. 49;
’243 Paper 1, p. 39

Charging Times

- **<u>Equation 1 (Energy discharged by single jump start):</u>**

  Volts ***x*** *Amps* ***x*** *Hours = Watt-hours*

- **<u>Equation 2 (Charging time):</u>**

  Watt-hours ÷ Watts = Hours

EX1044, ¶ 9;
'023 Paper 15, pp. 5-6, 16;
'243 Paper 14, pp. 4-6, 16

Charging Times

APPENDIX A – Exemplary Estimated Charging Times

- Equation 1: Output voltage of jump starter batteries (Volts) x Output current of jump starter batteries (Amps) x Duration of jump start (Hours) = Energy discharged by a single jump start (Watt-hours).
- Equation 2: Energy discharged (Watt-hours) ÷ Charging power (Watts) = Charging time (Hours).

Example	Output Voltage (V)	Output Current (A)	Duration (s)	Energy Discharged (Wh)[1]	Charging Time at 7.5W (h)[2]	Charging Time at 25W (h)[3]
1	12	400	2	2.67	0.36	0.11
2	12	500	2	3.33	0.44	0.13
3	12	1,000	2	6.67	0.89	0.27
4	12	4,000	2	26.67	3.56	1.07
5	12	400	5	6.67	0.89	0.27
6	12	500	5	8.33	1.11	0.33
7	12	1,000	5	16.67	2.22	0.67
8	12	4,000	5	66.67	8.89	2.67
9	48	400	2	10.67	1.42	0.43
10	48	500	2	13.33	1.78	0.53
11	48	1,000	2	26.67	3.56	1.07
12	48	4,000	2	106.67	14.22	4.27
13	48	400	5	26.67	3.56	1.07
14	48	500	5	33.33	4.44	1.33
15	48	1,000	5	66.67	8.89	2.67
16	48	4,000	5	266.67	35.56	10.67

[1] Values in this column calculated with Equation 1.
[2] Values in this column calculated with Equation 2, using the 7.5W available under the 2007 USB Charging Specification (EX1025).
[3] Values in this column calculated with Equation 2, using the 25W available under the 2012 USB Charging Specification (EX1046, pp. 8-81).

1

EX1044, Appendix A;
’023 Paper 15, pp. 6, 16;
’243 Paper 14, pp. 5-6, 16

Dr. Fayed's Testimony

21 Q. Got it. And so this calculation we've run
22 of peak amps times volts times hours is going to
1 give us, in watt hours, a reasonable estimate of how
2 much energy has been discharged from our jump
3 starter battery during one jump start?
4 A. That would be correct, yes.

EX1045, 26:21-27:4;
EX1003 ('023), ¶ 9;
'023 Paper 15, p. 5;
EX1003 ('243), ¶ 9;
'243 Paper 14, p. 5

Dr. MacCarley's Testimony

Q. So do these calculations require a constant charging power of 7.5 watts over the entire charging period?

A. No, no, that's not true for any battery charger.

Q. I understand that that's not true for any battery charger, but what I'm asking about is these specific calculations.

A. The calculations assumed it is constant. And that is consistent with industry practice in which batteries have amp-hour ratings that are a little bit -- call them conceivable ratings.

That is, a 20 amp-hour rating, which standard for all SLI batteries, has the nearly mythical assumption that you will be discharging that battery continuously at the same current for 20 hours, and then it will suddenly drop dead. That's a contrived situation, but it's the best you can do in the battery business.

EX2013, 25:2-20;
'023 Paper 18, p. 6;
'243 Paper 17, p. 6

Dr. MacCarley's Testimony

3 Q. Do these charging time calculations in
4 Appendix A account for what kind of charging cycle
5 is being used to charge the portable jump-starter
6 battery?
7 A. No.
8 But again, I want to emphasize, the
9 average is a very good estimate of what you would
10 get if you had a constant current source. Whether
11 it's slightly more, slightly less over the -- over
12 the charge time duration, it -- it all evens out.
13 So it is standard practice. It is fair
14 to just multiply the average power times the amount
15 of energy -- divide the amount of energy you want
16 to put in by the average power to get the time.

EX2013, 29:3-16;
'023 Paper 18, p. 7;
'243 Paper 17, p. 7

Dr. MacCarley's Testimony

22 Q. So the charging times in Appendix A don't
23 actually reflect the charging time required to
24 fully recharge the depleted jump start?
25 A. If the jump-starter battery were fully

1 depleted, then, no, they would take a -- it would
2 take a lot longer, the equivalent of the number of
3 jump starts could be done with the energy capacity
4 in those batteries that was now fully depleted.
5 But that's -- that's a contrived
6 scenario. In fact, it would be potentially
7 damaging to the batteries if you actually drained
8 them below about 50 percent in -- in my experience.
9 Also, the -- the current source
10 capability of a half-depleted lithium battery is a
11 bit less than if it is fully charged. So you
12 wouldn't ever fully discharge a jump starter. You
13 would take it down to the point where it is weak at
14 doing its job, and you'd call that the -- the end
15 of the line.

EX2013, 35:22-36:15;
'023 Paper 18, p. 8;
'243 Paper 17, p. 8

Dr. MacCarley's Testimony

11 Q. (By Mr. Graves) So does the charge state
12 of the vehicle battery affect the amount of energy
13 that will be needed to jump start a vehicle?
14 A. Yes.
15 Q. And do your calculations in Appendix A
16 account for the charge state of the vehicle
17 battery?
18 A. No.
19 Again, for the purposes of that chart,
20 which perhaps I didn't do an adequate job of
21 clarifying that, these are straightforward,
22 idealized calculations of the same type you would
23 find in any textbook.

EX2013, 30:11-23;
'023 Paper 18, p. 8;
'243 Paper 17, p. 8

Reasonable Expectation of Success

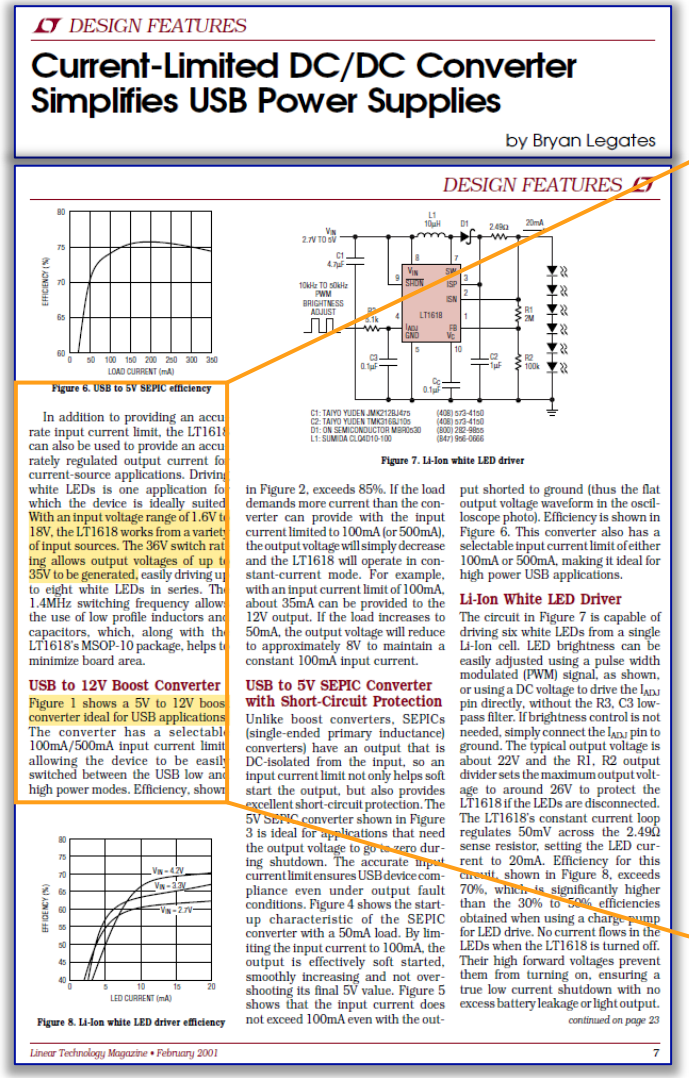

DESIGN FEATURES

Current-Limited DC/DC Converter Simplifies USB Power Supplies

by Bryan Legates

DESIGN FEATURES

Figure 6. USB to 5V SEPIC efficiency

Figure 7. Li-Ion white LED driver

Figure 8. Li-Ion white LED driver efficiency

In addition to providing an accurate input current limit, the LT1618 can also be used to provide an accurately regulated output current for current-source applications. Driving white LEDs is one application for which the device is ideally suited. With an input voltage range of 1.6V to 18V, the LT1618 works from a variety of input sources. The 36V switch rating allows output voltages of up to 35V to be generated, easily driving up to eight white LEDs in series. The 1.4MHz switching frequency allows the use of low profile inductors and capacitors, which, along with the LT1618's MSOP-10 package, helps to minimize board area.

USB to 12V Boost Converter

Figure 1 shows a 5V to 12V boost converter ideal for USB applications. The converter has a selectable 100mA/500mA input current limit, allowing the device to be easily switched between the USB low and high power modes. Efficiency, shown in Figure 2, exceeds 85%. If the load demands more current than the converter can provide with the input current limited to 100mA (or 500mA), the output voltage will simply decrease and the LT1618 will operate in constant-current mode. For example, with an input current limit of 100mA, about 35mA can be provided to the 12V output. If the load increases to 50mA, the output voltage will reduce to approximately 8V to maintain a constant 100mA input current.

USB to 5V SEPIC Converter with Short-Circuit Protection

Unlike boost converters, SEPICs (single-ended primary inductance) converters) have an output that is DC-isolated from the input, so an input current limit not only helps soft start the output, but also provides excellent short-circuit protection. The 5V SEPIC converter shown in Figure 3 is ideal for applications that need the output voltage to go to zero during shutdown. The accurate input current limit ensures USB device compliance even under output fault conditions. Figure 4 shows the start-up characteristic of the SEPIC converter with a 50mA load. By limiting the input current to 100mA, the output is effectively soft started, smoothly increasing and not overshooting its final 5V value. Figure 5 shows that the input current does not exceed 100mA even with the output shorted to ground (thus the flat output voltage waveform in the oscilloscope photo). Efficiency is shown in Figure 6. This converter also has a selectable input current limit of either 100mA or 500mA, making it ideal for high power USB applications.

Li-Ion White LED Driver

The circuit in Figure 7 is capable of driving six white LEDs from a single Li-Ion cell. LED brightness can be easily adjusted using a pulse width modulated (PWM) signal, as shown, or using a DC voltage to drive the I_{ADJ} pin directly, without the R3, C3 low-pass filter. If brightness control is not needed, simply connect the I_{ADJ} pin to ground. The typical output voltage is about 22V and the R1, R2 output divider sets the maximum output voltage to around 26V to protect the LT1618 if the LEDs are disconnected. The LT1618's constant current loop regulates 50mV across the 2.49Ω sense resistor, setting the LED current to 20mA. Efficiency for this circuit, shown in Figure 8, exceeds 70%, which is significantly higher than the 30% to 50% efficiencies obtained when using a charge pump for LED drive. No current flows in the LEDs when the LT1618 is turned off. Their high forward voltages prevent them from turning on, ensuring a true low current shutdown with no excess battery leakage or light output.

continued on page 23

In addition to providing an accurate input current limit, the LT1618 can also be used to provide an accurately regulated output current for current-source applications. Driving white LEDs is one application for which the device is ideally suited. With an input voltage range of 1.6V to 18V, the LT1618 works from a variety of input sources. The 36V switch rating allows output voltages of up to 35V to be generated, easily driving up to eight white LEDs in series. The 1.4MHz switching frequency allows the use of low profile inductors and capacitors, which, along with the LT1618's MSOP-10 package, helps to minimize board area.

USB to 12V Boost Converter

Figure 1 shows a 5V to 12V boost converter ideal for USB applications. The converter has a selectable 100mA/500mA input current limit, allowing the device to be easily switched between the USB low and high power modes. Efficiency, shown

EX1027, pp. 26-27;
'023 Paper 6, p. 47;
'243 Paper 1, p. 37

Reasonable Expectation of Success

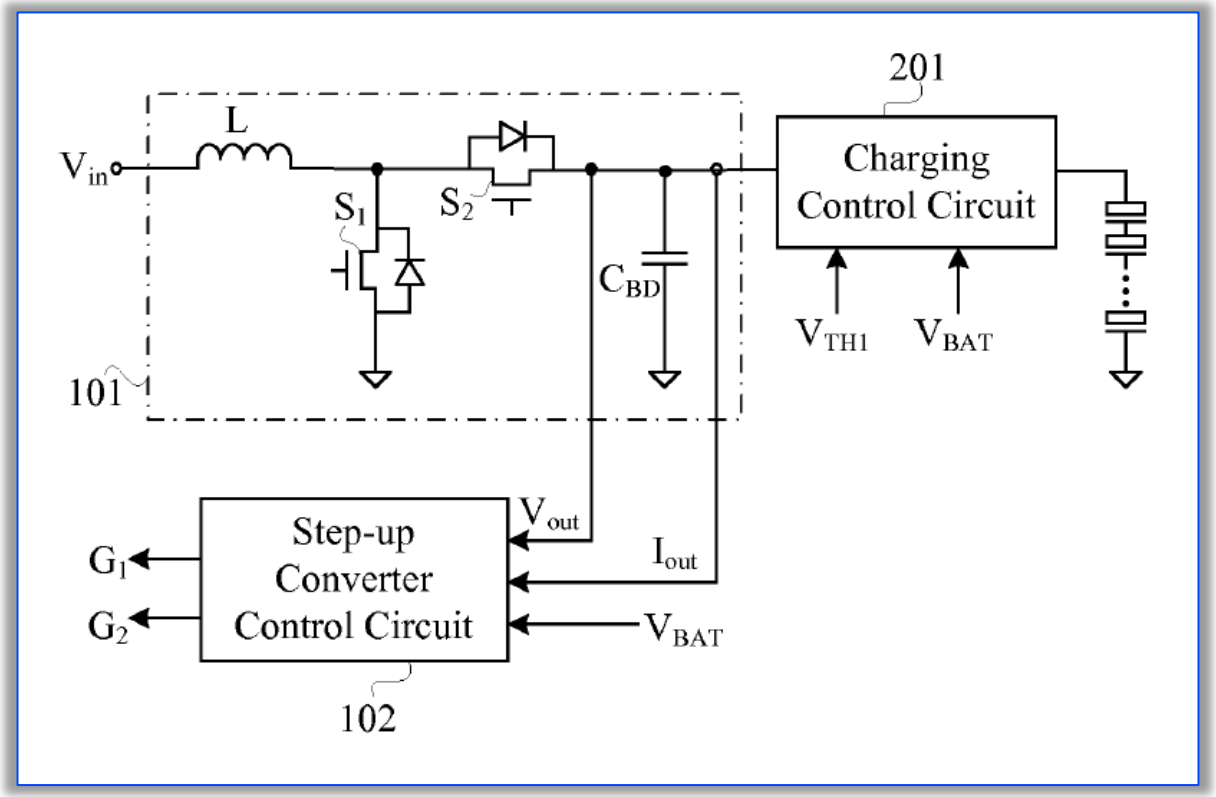

EX1006, Fig. 1;
'023 Paper 6, pp. 43-45; EX1003 ('023),
¶¶ 86-88, 91, 94; '023 Paper 15, p. 17;
'243 Paper 1, pp. 40-42; EX1003 ('243),
¶¶ 86-87, 94, 98-100; '243 Paper 15, pp. 16-17;
EX1044, ¶ 15

Reasonable Expectation of Success

voltage of about 25V, to the diode array **202**. The circuit is capable of being scaled up or down without departing from the invention. The boost converter **290** may raise the battery **302** voltage from 3V to 48V, charging up a bank of energy storage capacitors **294** to store enough energy to deliver a pump pulse. The anode of the load (pump diode) may be connected to the 48V, and the cathode may be driven toward ground by a four-phase PWM circuit. The pulse width may be modulated to provide a constant controlled current pulse through the main load, for example the diode array **202**, even as the capacitor voltage is dropping from 48V to as low as 32V.

US008594144B1

(12) **United States Patent**
Bagg

(10) **Patent No.: US 8,594,144 B1**
(45) **Date of Patent: Nov. 26, 2013**

(54) **PUMP DIODE DRIVER CIRCUIT**

(75) Inventor: **Charles G. Bagg**, Fitchburg, MA (US)

(73) Assignee: **L-3 Insight Technology Incorporated**, Londonderry, NH (US)

(*) Notice: Subject to any disclaimer, the term of this patent is extended or adjusted under 35 U.S.C. 154(b) by 521 days.

(21) Appl. No.: **12/774,915**

(22) Filed: **May 6, 2010**

Related U.S. Application Data

(60) Provisional application No. 61/176,245, filed on May 7, 2009, provisional application No. 61/183,213, filed on Jun. 2, 2009.

(51) **Int. Cl.**
H01S 3/00 (2006.01)

(52) **U.S. Cl.**
USPC **372/38.02**; 372/25; 372/38.06

(58) **Field of Classification Search**
USPC 372/25, 38.02
See application file for complete search history.

(56) **References Cited**

U.S. PATENT DOCUMENTS

5,696,781	A *	12/1997	Hyuga	372/21
2006/0291512	A1 *	12/2006	Borschowa	372/38.02
2008/0129270	A1 *	6/2008	Kawk et al.	323/288

* cited by examiner

Primary Examiner — Xinning Niu

(57) **ABSTRACT**

A laser marker/designator has an energy storage and conversion circuit providing a constant input current to a solid state pulsed pump diode.

6 Claims, 6 Drawing Sheets

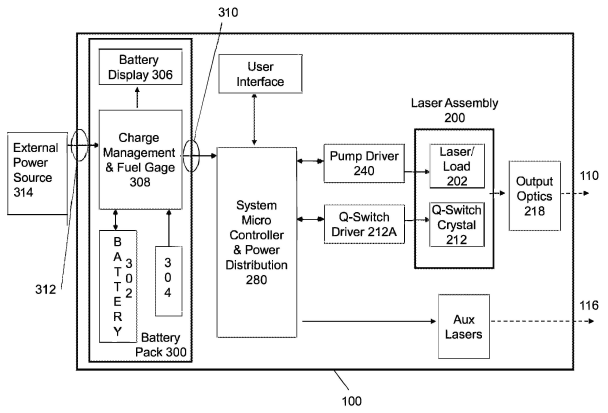

EX1047, 4:3-32;
'023 Paper 15, p. 18;
'243 Paper 14, pp. 17-18

Reasonable Expectation of Success

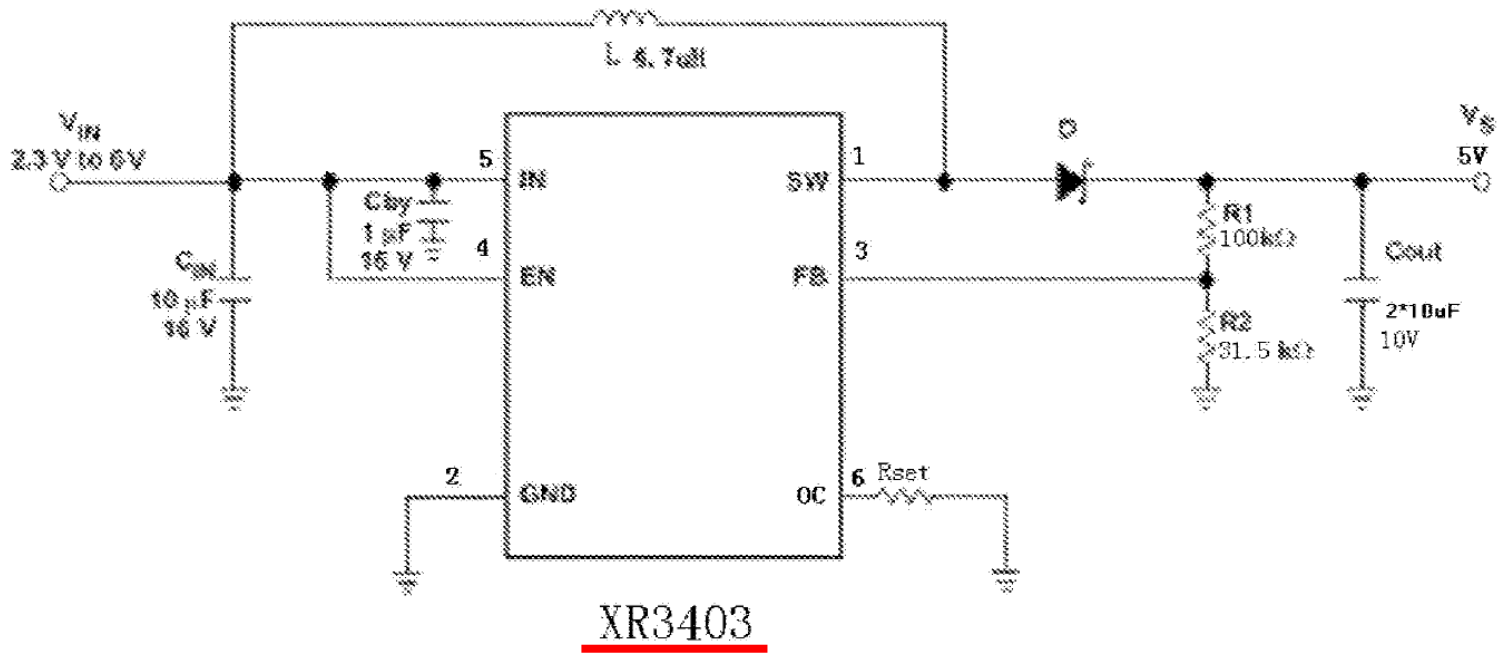

Figure 1. Typical Application Circuit

EX1012, p. 1;
'023 Paper 6, p. 10; EX1003 ('023), ¶¶ 26-27; '023 Paper 15, p. 17;
'243 Paper 1, p. 9; EX1003 ('243), ¶¶ 26-27; '243 Paper 14, p. 17

IPR2020-00944

- No prior art presented showing USB input charging port
- No evidence of motivation to combine

Petitioner explains:

It would be *readily apparent* from the references that a USB port, which is simply a different physical plug and socket combination from the round plug and socket used in the Epower-20 and 21 products, *could also be incorporated* into portable jump starters in place of or in addition to the 14V 1 A input port to charge the internal batteries of jump starter devices. *A POSITA would be motivated to provide such a USB charging port to provide the added convenience to users of using another commonly used power input for charging the jump starter device.* Ex. 1002, ¶ 190.

The matter is much more complicated than what Petitioner's argument makes it out to be. There is insufficient accounting by Petitioner of the expectation at the time of one with ordinary skill in the art about the ease or difficulty in locating a usable source to provide input charge to a USB port on a jump starter. In the absence of sufficient explanation and supporting evidence, which is the case here, we are not persuaded by Petitioner's conclusory assertion that "[a] POSITA would be motivated to provide such a USB charging port to provide the added convenience to users of using another commonly used power input for charging the jump starter device." Pet. 62. The Federal Circuit has stated that "[t]his assessment of basic knowledge and common sense was not based on any evidence in the record and, therefore, lacks substantial evidentiary support." *In re Zurko*, 258 F.3d 1379, 1385 (Fed. Cir. 2001).

EX1014, pp. 92-93;
'023 Paper 6, p. 15; '023 Paper 15, pp. 2-3
'243 Paper 1, p. 12; '243 Paper 14, pp. 2-3

Ground 2: Obviousness in view of Yu and Paparrizos

Yu

(19) China National Intellectual Property Administration

(12) Utility Model Patent

(10) Authorized Public Notice No. CN 203211234U

(45) Authorized Public Notice Date 2013.09.25

(21) Application No. 201320217854.6

(22) Application Date 2013.04.26

(73) Patent Assignee Huizhou Huayitong Technology Co., Ltd.

Address 516000 Room 701, Floor A, Jinmai Mountain Villa F, Maidi Mumiankeng, Huizhou, Guangdong Province

(72) Inventor Yu Chunlan

(51) Int. Cl.

B60R 16/033 (2006.01)

(ESM) An invention patent application for the same invention has been submitted on the same day

Claims 1 page Description 3 pages Attached figures 6 pages

(54) Utility model name

Automotive Emergency Starting Device

(57) Abstract

The utility model relates to an automotive starting device, specifically, an emergency automotive starting device. The utility model consists of an internal battery, a charging input interface, a display module, a control module, a relay, input buttons and an output terminal, wherein the main contacts of the relay are connected to the internal battery and the output terminal; The control module includes a microprocessor, and the microprocessor controls the opening and closing of the relay through the relay switch circuit to control current output from the internal battery to the output terminal; it also includes an external battery reverse polarity detection circuit that signals correct or incorrect external battery wiring. The internal and external batteries of the device are connected through a relay. Under normal circumstances and after the automobile is successfully started, the relay is in disconnected state, so that the device does not generate sparks when it is connected and disconnected. In addition, when the battery is connected to the output terminal with the wrong polarity, the relay controlled by the microprocessor will not close, preventing the wrong polarity from causing a large flow of current.

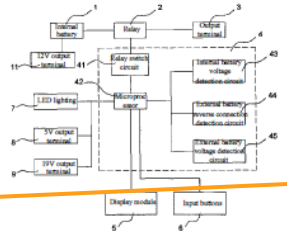

(54) Utility model name

Automotive Emergency Starting Device

(57) Abstract

The utility model relates to an automotive starting device, specifically, an emergency automotive starting device. The utility model consists of an internal battery, a charging input interface, a display module, a control module, a relay, input buttons and an output terminal, wherein the main contacts of the relay are connected to the internal battery and the output terminal; The control module includes a microprocessor, and the microprocessor controls the opening and closing of the relay through the relay switch circuit to control current output from the internal battery to the output terminal; it also includes an external battery reverse polarity detection circuit that signals correct or incorrect external battery wiring. The internal and external batteries of the device are connected through a relay. Under normal circumstances and after the automobile is successfully started, the relay is in disconnected state, so that the device does not generate sparks when it is connected and disconnected. In addition, when the battery is connected to the output terminal with the wrong polarity, the relay controlled by the microprocessor will not close, preventing the wrong polarity from causing a large flow of current.

EX1008, (54) & (57);
'023 Paper 6, pp. 21, 60-61;
'243 Paper 1, pp. 16-17, 54-55

Yu

The Board has already found, and NOCO does not dispute, that Yu discloses all limitations of the challenged claims aside from the USB limitations.

Claim 1 Preamble	**A jump starting apparatus configured for boosting or charging a depleted or discharged battery having a positive polarity battery terminal and a negative polarity battery terminal, the jump starting apparatus comprising:**
Limitation 1(a)	**a power supply;**
Limitation 1(b)	**a positive polarity battery terminal connector configured for connecting the jump starting apparatus to the positive polarity battery terminal of the depleted or discharged battery;**
Limitation 1(c)	**a negative polarity battery terminal connector configured for connecting the jump starting apparatus to the negative polarity battery terminal of the depleted or discharged battery;**
Limitation 1(d)	**a power switch or circuit configured to turn on power from the power supply to the positive and negative polarity battery terminal connectors;**
Limitation 1(e)	**a control system or circuit connected to and controlling the power switch, the control system or circuit configured to detect whether the positive and negative polarity battery terminal connectors have a correct polarity connection with the positive and negative polarity battery terminals of the depleted or discharged battery prior to turning on the power switch or circuit;**
Limitation 1(f)	a USB input circuit connected to the power supply, the USB input circuit configured for converting power from a USB power source to increase power voltage to the power supply; and
Limitation 1(g)	a USB input connector connected to the USB input circuit, the USB input connector configured for connecting to the USB power source and providing power input from the USB power source through the USB input connector and the USB input circuit to the power supply.

’023 Paper 8, pp. 34-47; ’243 Paper 7, pp. 34-37

Yu

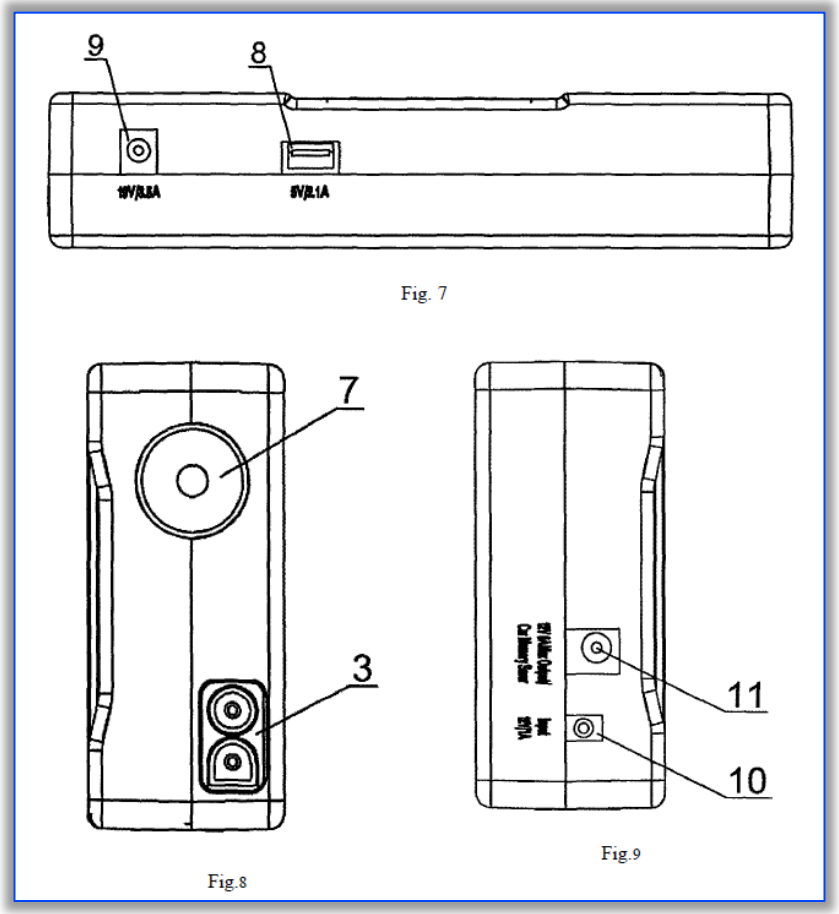

EX1008, Figs. 7-9;
’023 Paper 6, pp. 61, 68;
’243 Paper 1, pp. 55, 60

Paparrizos

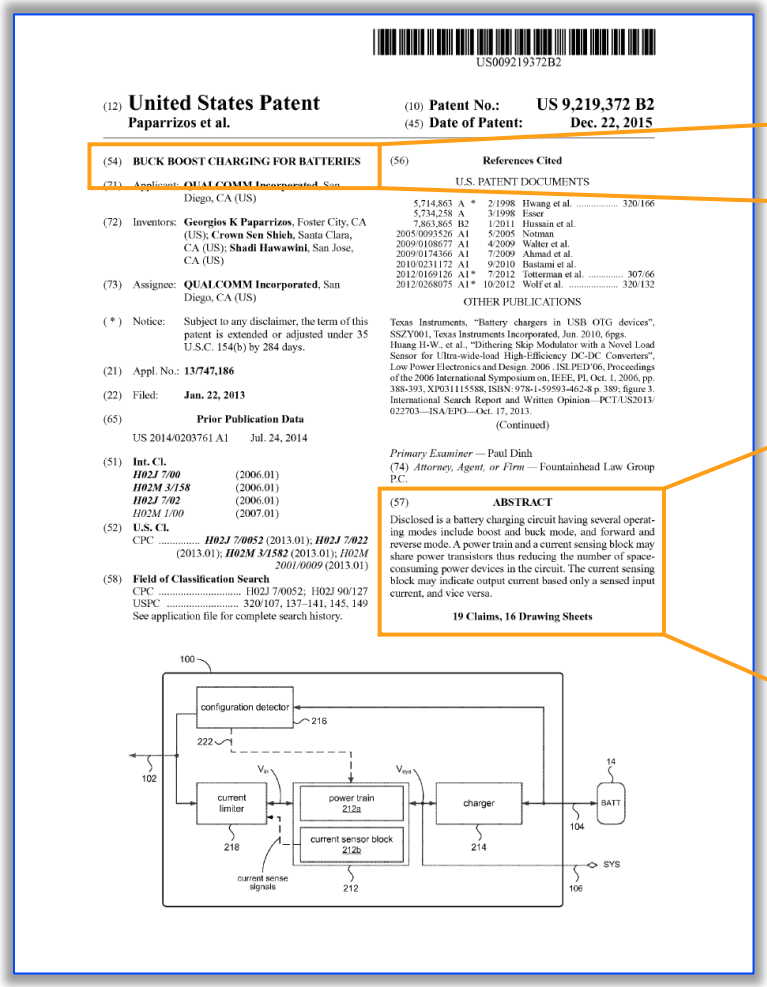

US009219372B2

(12) **United States Patent**
Paparrizos et al.

(10) **Patent No.: US 9,219,372 B2**
(45) **Date of Patent: Dec. 22, 2015**

(54) **BUCK BOOST CHARGING FOR BATTERIES**

(71) Applicant: **QUALCOMM Incorporated**, San Diego, CA (US)

(72) Inventors: **Georgios K Paparrizos**, Foster City, CA (US); **Crown Sen Shieh**, Santa Clara, CA (US); **Shadi Hawawini**, San Jose, CA (US)

(73) Assignee: **QUALCOMM Incorporated**, San Diego, CA (US)

(*) Notice: Subject to any disclaimer, the term of this patent is extended or adjusted under 35 U.S.C. 154(b) by 284 days.

(21) Appl. No.: **13/747,186**

(22) Filed: **Jan. 22, 2013**

(65) **Prior Publication Data**

US 2014/0203761 A1 Jul. 24, 2014

(51) **Int. Cl.**

H02J 7/00	(2006.01)
H02M 3/158	(2006.01)
H02J 7/02	(2006.01)
H02M 1/00	(2007.01)

(52) **U.S. Cl.**

CPC ***H02J 7/0052*** (2013.01); ***H02J 7/022*** (2013.01); ***H02M 3/1582*** (2013.01); *H02M 2001/0009* (2013.01)

(58) **Field of Classification Search**

CPC H02J 7/0052; H02J 90/127
USPC 320/107, 137–141, 145, 149
See application file for complete search history.

(56) **References Cited**

U.S. PATENT DOCUMENTS

5,714,863	A *	2/1998	Hwang et al.	320/166
5,734,258	A	3/1998	Esser	
7,863,865	B2	1/2011	Hussain et al.	
2005/0093526	A1	5/2005	Notman	
2009/0108677	A1	4/2009	Walter et al.	
2009/0174366	A1	7/2009	Ahmad et al.	
2010/0231172	A1	9/2010	Bastami et al.	
2012/0169126	A1 *	7/2012	Totterman et al.	307/66
2012/0268075	A1 *	10/2012	Wolf et al.	320/132

OTHER PUBLICATIONS

Texas Instruments, "Battery chargers in USB OTG devices", SSZY001, Texas Instruments Incorporated, Jun. 2010, 6pgs.
Huang H-W., et al., "Dithering Skip Modulator with a Novel Load Sensor for Ultra-wide-load High-Efficiency DC-DC Converters", Low Power Electronics and Design. 2006 . ISLPED'06. Proceedings of the 2006 International Symposium on, IEEE, Pl, Oct. 1, 2006, pp. 388-393, XP031115588, ISBN: 978-1-59593-462-8 p. 389; figure 3.
International Search Report and Written Opinion—PCT/US2013/022703—ISA/EPO—Oct. 17, 2013.
(Continued)

Primary Examiner — Paul Dinh
(74) *Attorney, Agent, or Firm* — Fountainhead Law Group P.C.

(57) **ABSTRACT**

Disclosed is a battery charging circuit having several operating modes include boost and buck mode, and forward and reverse mode. A power train and a current sensing block may share power transistors thus reducing the number of space-consuming power devices in the circuit. The current sensing block may indicate output current based only a sensed input current, and vice versa.

19 Claims, 16 Drawing Sheets

(54) **BUCK BOOST CHARGING FOR BATTERIES**

(57) **ABSTRACT**

Disclosed is a battery charging circuit having several operating modes include boost and buck mode, and forward and reverse mode. A power train and a current sensing block may share power transistors thus reducing the number of space-consuming power devices in the circuit. The current sensing block may indicate output current based only a sensed input current, and vice versa.

EX1009, (54) & (57);
'023 Paper 6, p. 22;
'243 Paper 1, p. 17

Paparrizos

The battery charging circuit **100** may be connected to a battery **14** to provide power to electronics **12** comprising the electronic device **10**. The battery **14** may comprise any suitable type of rechargeable battery cell, such as Li+ ion batteries for example. The battery **14** may further comprise a single battery cell, or more than one battery cell connected in series. Battery **14**, for example, may include 2 series-connected battery cells (a "2S stack"), but other configurations involving 3, 4, or more series-connected cells are possible. The battery voltage of such batteries typically range from 6-8.4V but can provide lower or higher voltages.

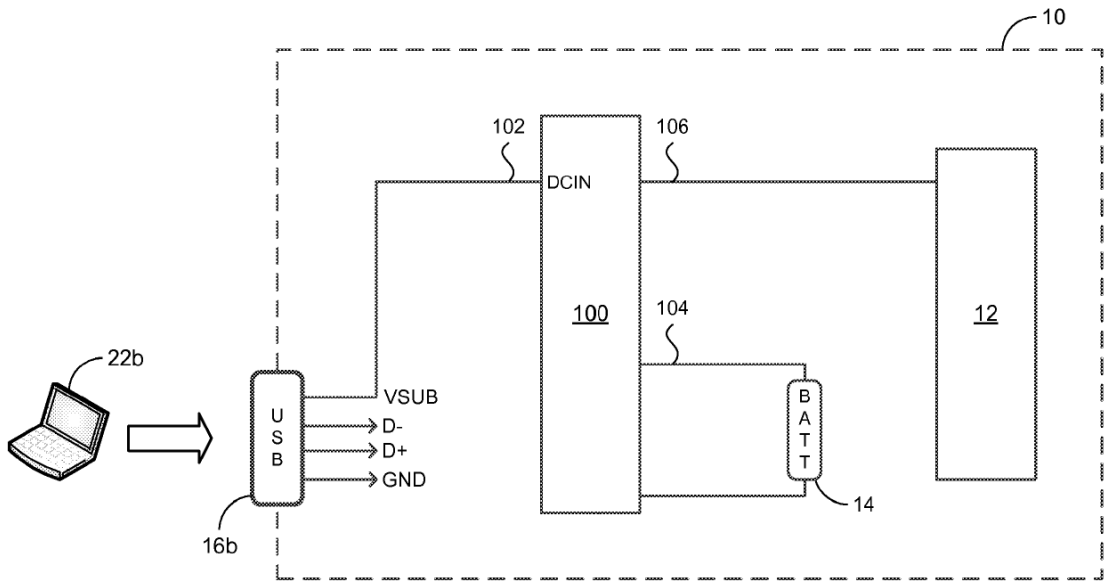

Fig. 1B

EX1009, Fig. 1B, 2:30-40;
'023 Paper 6, pp. 22, 60, 65-67; EX1003 ('023), ¶¶ 54, 161; '023 Paper 15, p. 19
'243 Paper 1, pp. 17, 54, 58-60; EX1003 ('243), ¶¶ 58, 146; '243 Paper 14, p. 19

Paparrizos

BUCK BOOST CHARGING FOR BATTERIES

BACKGROUND

Unless otherwise indicated herein, the approaches described in this section are not prior art to the claims in this application and are not admitted to be prior art by inclusion in this section.

Computer tablets and other mobile devices, such as mobile phones, digital SLR cameras, video recorders, audio devices, and so on are moving to battery packs with two (or more) Li-ion cells in series (so-called "2S" or "3S" stacks or cells). Battery voltages of multi-stack battery packs typically range from 3.0V to 8.4V. Such devices typically are provided with their own power adapters for charging the high voltage battery packs.

The USB specification has become very popular and consumers have become used to being able to charge their USB devices from universal USB power sources. Consumers are used to USB, mini-USB, and micro-USB connectors being present in portable electronics and their use for battery charging from a USB power source. However, since a large majority of USB devices are defined at 5V, it may not be possible to charge high voltage (>5V) 2S or 3S battery packs using a typically USB power source.

EX1009, 1:1-23;
'023 Paper 6, pp. 47, 50-51, 68-69;
EX1003 ('023), ¶¶ 90, 94, 165;
'023 Paper 15, p. 20;
'243 Paper 1, pp. 37, 40-42, 60-62;
EX1003 ('243), ¶¶ 86-87, 93, 141;
'243 Paper 14, p. 20

Paparrizos

As another example, the external power supply **22***a* may provide a voltage level that is lower than the voltage level of the battery **14**; e.g., the power supply may be a USB supply that outputs 5V (per the USB specification) while the battery **14** is an 8.4V battery, or the external power supply may not supply sufficient voltage to operate the electronics **12**. Similarly, with reference to FIG. **1**B, the electronic device **22***b* may be a USB device that outputs only 5V, but must charge an 8.4V battery, or provide power to electronics **12** that require more than 5V to operate. Accordingly, the buck boost circuit

212 may be operated as a forward boost converter to increase the voltage level that is received at input terminal **102** to produce a suitable voltage level at charging terminal **104** or system terminal **106**.

EX1009, 3:58-4:4;
'023 Paper 6, pp. 18-19, 66-67; '023 Paper 15, p. 24
'243 Paper 1, pp. 59-62; '243 Paper 14, pp. 23-24

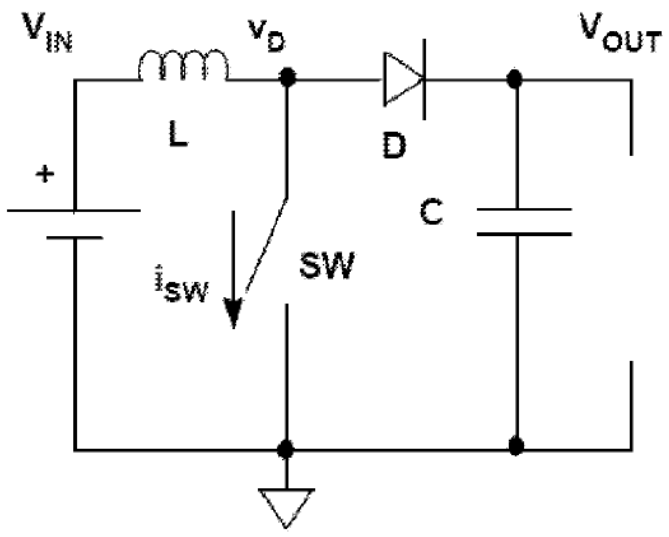

Fig. 8A
(prior art)

Paparrizos

If at block **506**, the voltage configuration determined at block **504** indicates forward boost mode operation, then at block **508** the battery charging circuit **100** may configure the buck boost circuit **212** for forward boost mode operation. In some embodiments, for example, the configuration detector **216** may assert various control signals (not shown) that can inform the buck boost circuit **212** to configure for forward boost mode. As an example, suppose an external device **22** is connected to the input terminal **102** and the voltage level V_1 at input terminal **102** is lower than the voltage level V_2 at charging terminal **104**. It may therefore be necessary to step up the voltage level V_1 to a higher voltage level in order to properly charge the battery **14**. If the external device is a USB adapter (or a USB host device) and the battery **14** is a 3S battery pack, then the 5V output of the USB adapter (or device) will be insufficient to fully charge the 3S battery, which may output 12V for instance. Accordingly, the buck boost circuit **212** may be configured for forward boost mode operation to step up the 5V to a higher voltage level. In some embodiments, the system terminal **106** may be electrically connected to charging terminal **104**, so a voltage level V_2 may appear on system terminal **106** as well.

EX1009, 8:10-31;
'023 Paper 6, pp. 22, 26, 60, 67, 69;
EX1003 ('023), ¶¶ 54, 150, 164, 167;
'023 Paper 15, pp. 19, 24-25
'243 Paper 1, pp. 17, 21-22, 54, 58-59, 62;
EX1003 ('243), ¶¶ 58, 131, 141, 147;
'243 Paper 14, pp. 19, 23-24

Paparrizos

and/or provide power to electronics **12**. Likewise, referring to FIG. **1**B, in some embodiments, an electronic device **22***b* may be connected to the electronic device **10** via a general connector **16***b*. For example, the electronic device **22***b* may be laptop computer. FIG. **1**B shows connector **16***b* to be a USB connector (see also FIG. **1**C, which illustrates a micro-USB connector **16***c*), but it will be appreciated that other embodiments may employ any other suitable connector types. In some embodiments, the electronic device **10** may incorporate both kinds of connectors **16***a* and **16***b* on the device; e.g., for connecting to an external power source **22***a* and/or to an electronic device **22***b*.

EX1009, 2:56-67;
'023 Paper 6, pp. 66, 69;
'243 Paper 1, pp. 59, 61

Dependent Claim 32 and Independent Claim 52

Claim 32	The apparatus according to claim 1, wherein the DC-DC converter can be turned on and off by a microprocessor.
Claim 52(h)	wherein the DC-DC converter can be turned on and off by an output from the microcontroller.

EX1001 ('023), Claims 32, 52
'023 Paper 6, claim listing