US 20020102783A1

(19) United States

(12) Patent Application Publication

(10) Pub. No.: US 2002/0102783 A1

(43) Pub. Date: Aug. 1, 2002

Fujimoto et al.

(54) SEMICONDUCTOR DEVICE AND METHOD OF MANUFACTURING THE SAME

(75) Inventors: **Etsuko Fujimoto**, Kanagawa (JP); **Satoshi Murakami**, Kanagawa (JP); **Akira Tsunoda**, Kanagawa (JP)

Correspondence Address:
COOK, ALEX, McFARRON, MANZO, CUMMINGS & MEHLER, LTD
SUITE 2850
200 WEST ADAMS STREET
CHICAGO, IL 60606 (US)

(73) Assignee: **Semiconductor Energy Laboratory Co., Ltd.**

(21) Appl. No.: **10/017,114**

(22) Filed: **Oct. 24, 2001**

(30) **Foreign Application Priority Data**

Oct. 26, 2000 (JP) 2000-327879
Sep. 25, 2001 (JP) 2001-291795

Publication Classification

(51) **Int. Cl.**[7] **H01L 21/8238**
(52) **U.S. Cl.** **438/200**

(57) **ABSTRACT**

According to the present invention, a pixel TFT (an n-channel TFT) having a considerably low OFF current value and a high ratio of an ON current value to an OFF current value can be realized. In a pixel portion, an electrode having a taper portion with a width of 1μm or more is formed. An impurity region is formed by adding an impurity through the taper portion, so that the impurity region has a concentration gradient. Then, only the taper portion is removed to form the pixel TFT in the pixel portion. In the impurity region of the pixel TFT in the pixel portion, the concentration gradient is provided in a concentration distribution of the impurity imparting one conductivity, whereby a concentration is made small on the side of a channel forming region and a concentration is made large on the side of a semiconductor layer end portion.

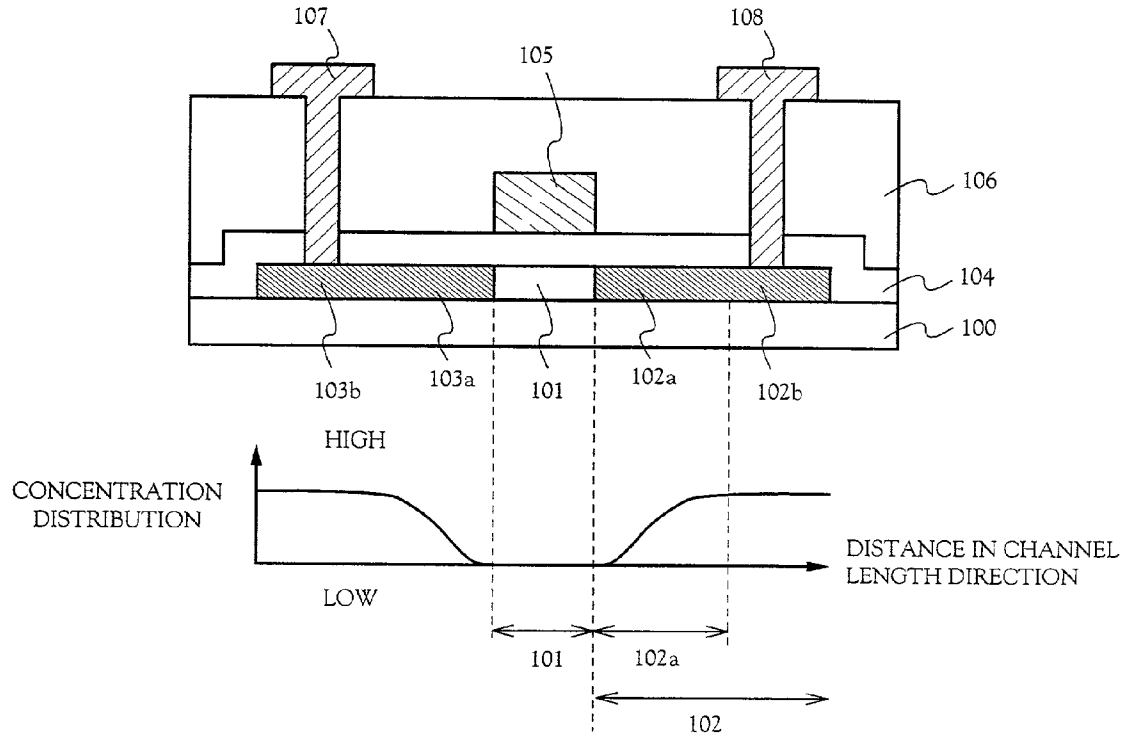

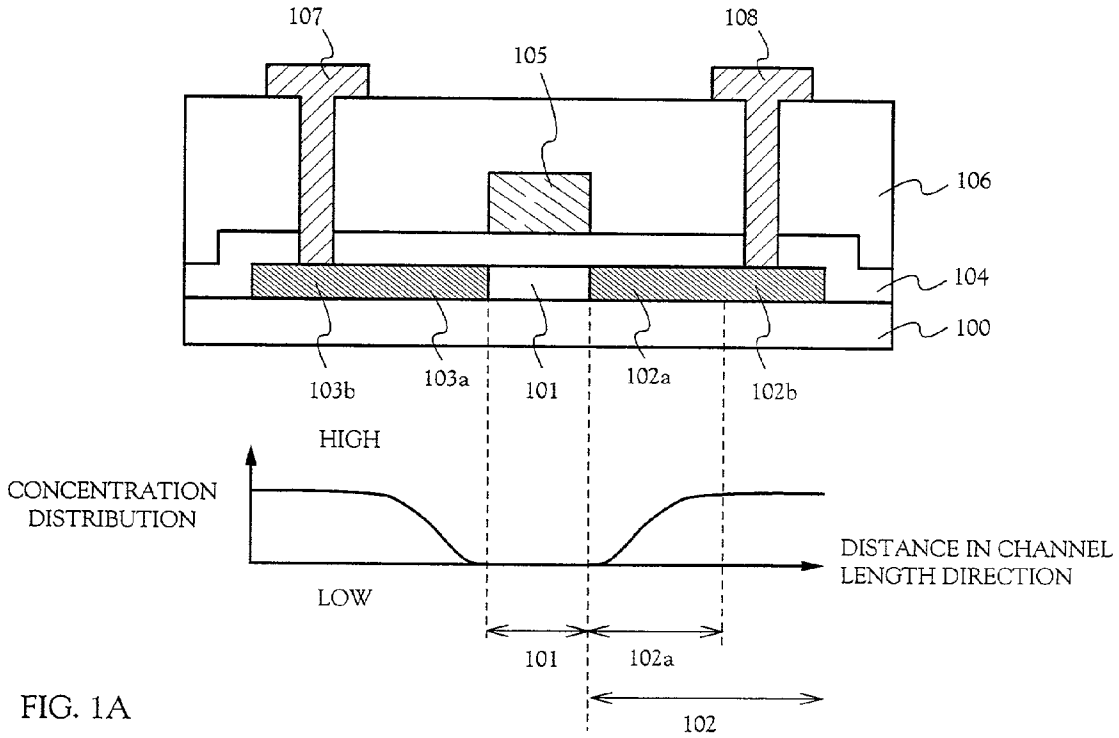
107
108
105
106
104
100
103b
103a
101
102a
102b
HIGH
CONCENTRATION DISTRIBUTION
LOW
DISTANCE IN CHANNEL LENGTH DIRECTION
101
102a
102

FIG. 1A

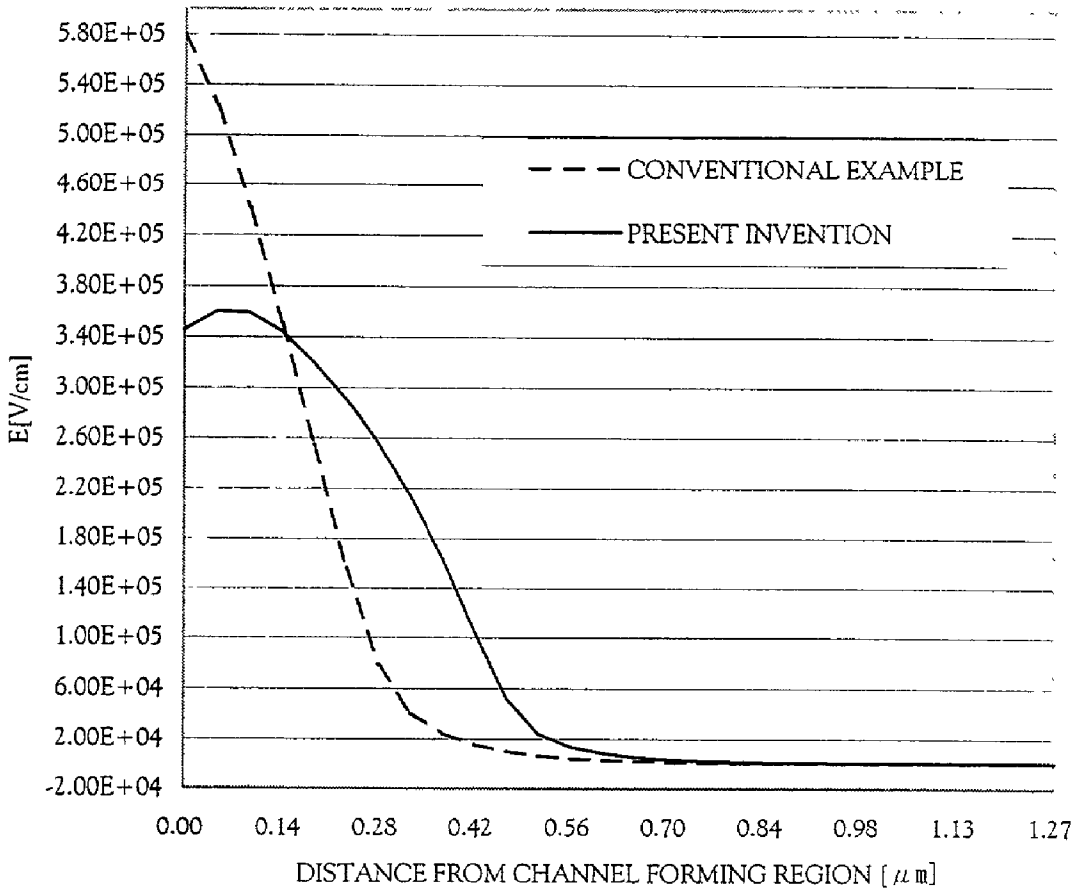
5.80E+05
5.40E+05
5.00E+05
4.60E+05
4.20E+05
3.80E+05
3.40E+05
3.00E+05
2.60E+05
2.20E+05
1.80E+05
1.40E+05
1.00E+05
6.00E+04
2.00E+04
-2.00E+04
E[V/cm]
CONVENTIONAL EXAMPLE
PRESENT INVENTION
0.00
0.14
0.28
0.42
0.56
0.70
0.84
0.98
1.13
1.27
DISTANCE FROM CHANNEL FORMING REGION [μm]

FIG. 1B

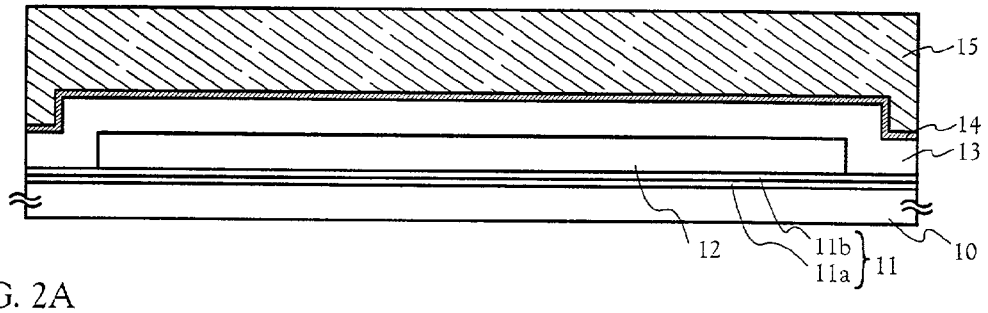

FIG. 2A

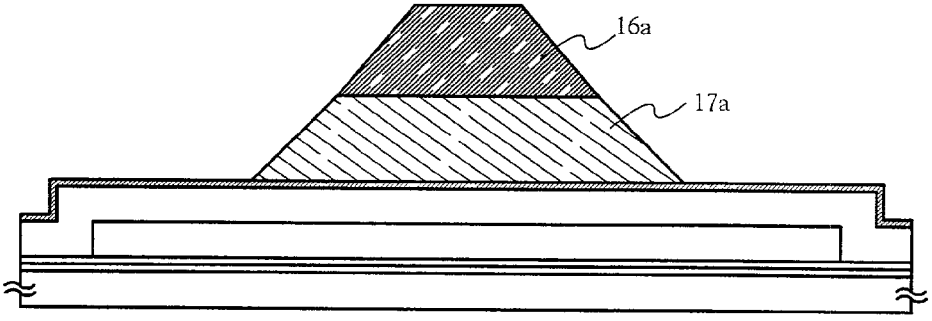

FIG. 2B

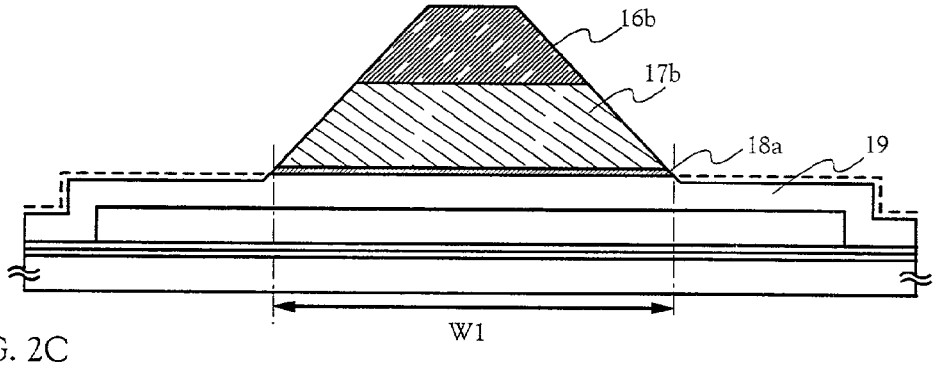

FIG. 2C

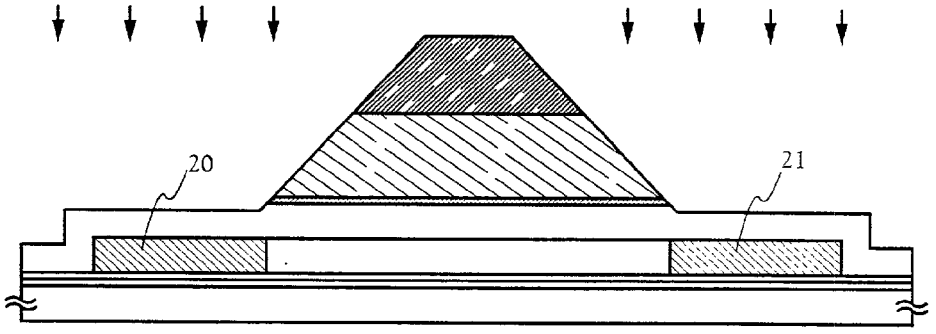

FIG. 2D

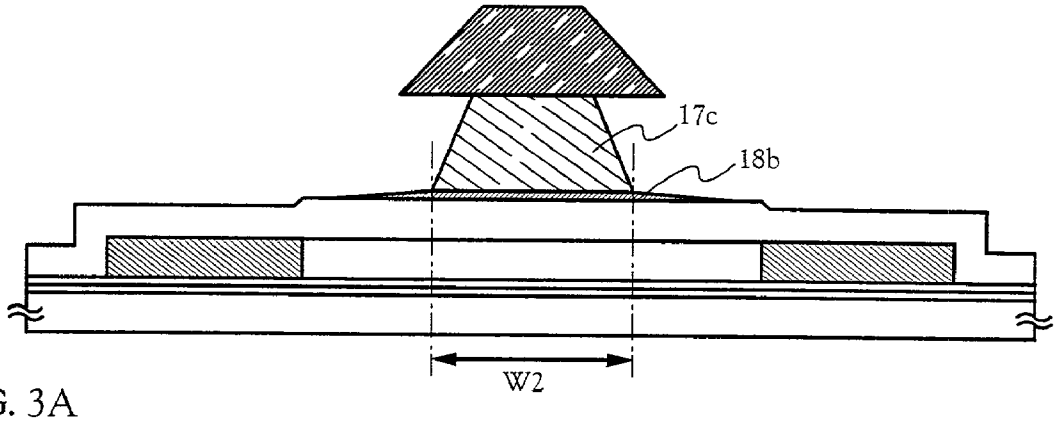

FIG. 3A

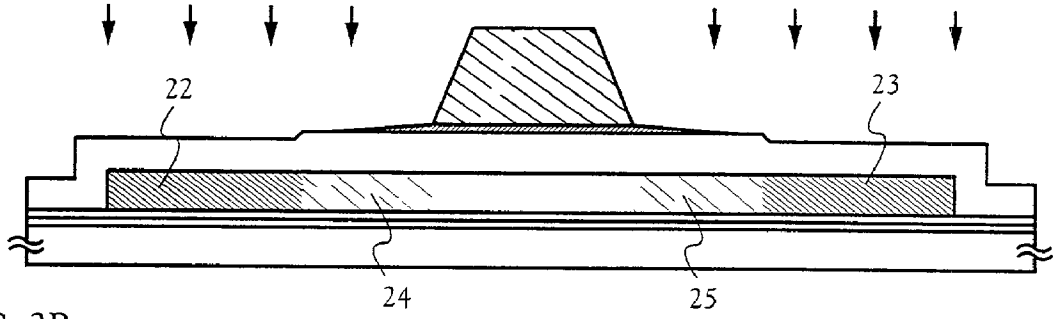

FIG. 3B

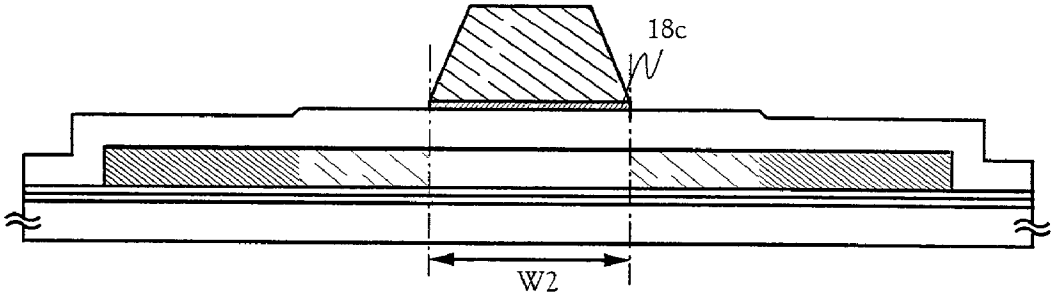

FIG. 3C

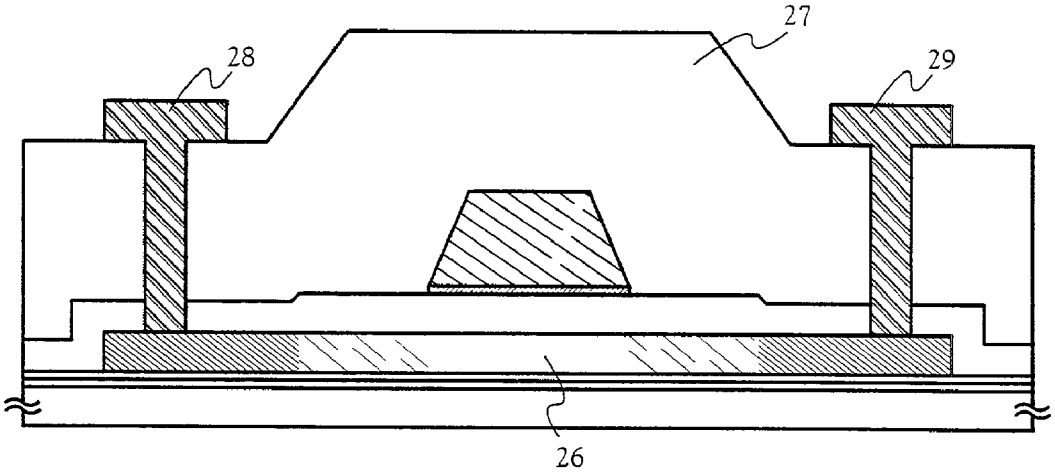

FIG. 3D

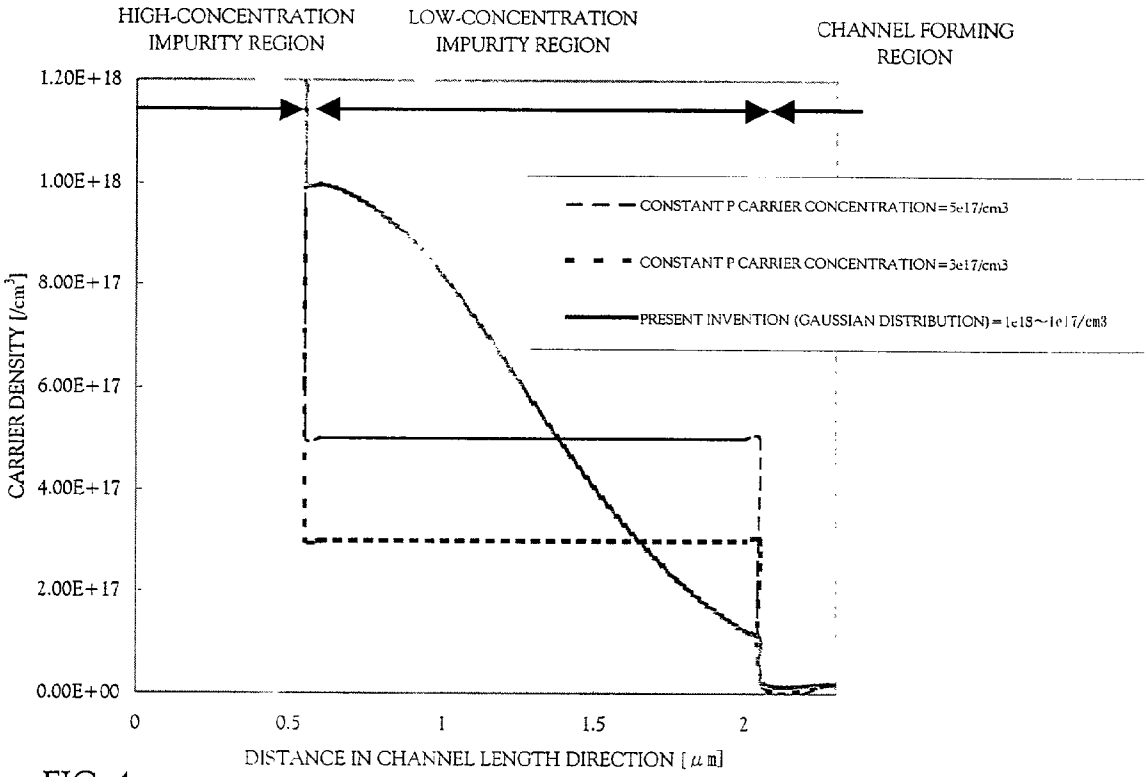
HIGH-CONCENTRATION IMPURITY REGION
LOW-CONCENTRATION IMPURITY REGION
CHANNEL FORMING REGION
1.20E+18
1.00E+18
8.00E+17
6.00E+17
4.00E+17
2.00E+17
0.00E+00
CARRIER DENSITY [/cm3]
CONSTANT P CARRIER CONCENTRATION=5e17/cm3
CONSTANT P CARRIER CONCENTRATION=3e17/cm3
PRESENT INVENTION (GAUSSIAN DISTRIBUTION)=1e18~1e17/cm3
0
0.5
1
1.5
2
DISTANCE IN CHANNEL LENGTH DIRECTION [μm]

FIG. 4

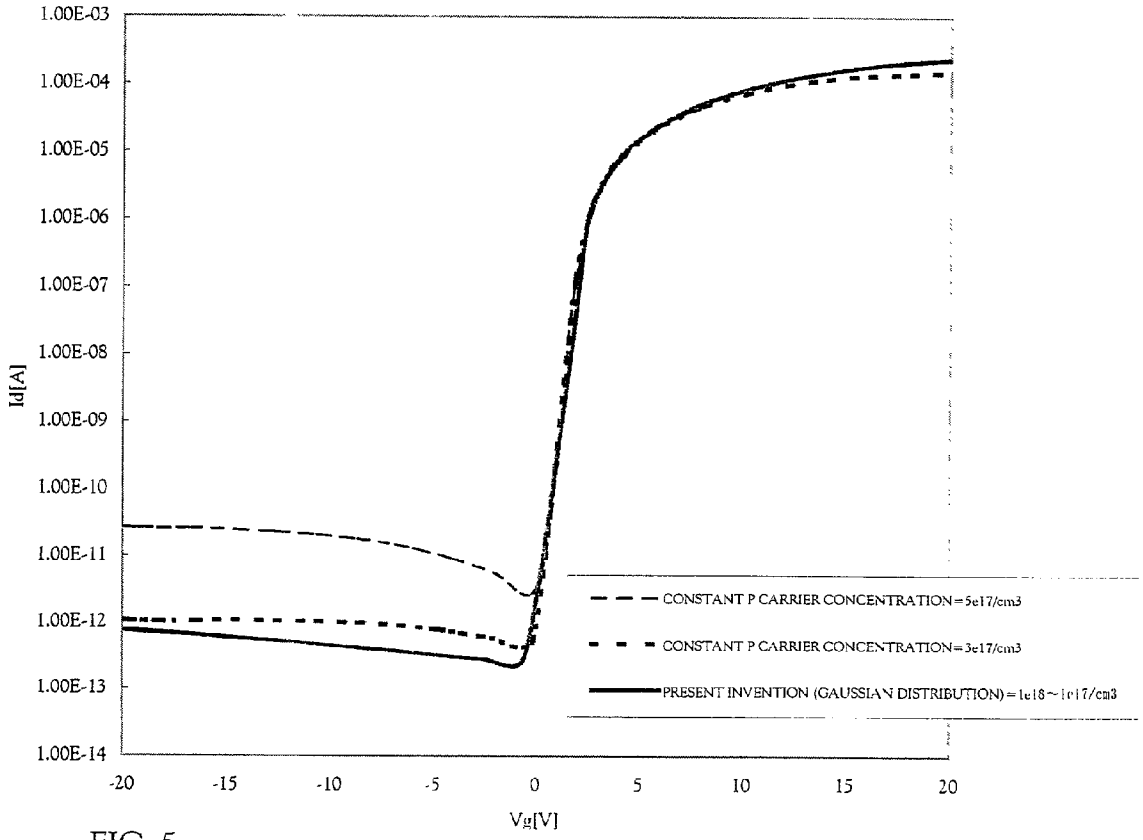

FIG. 5

Id-Vg CURVE Vd=14V L/W=6/4

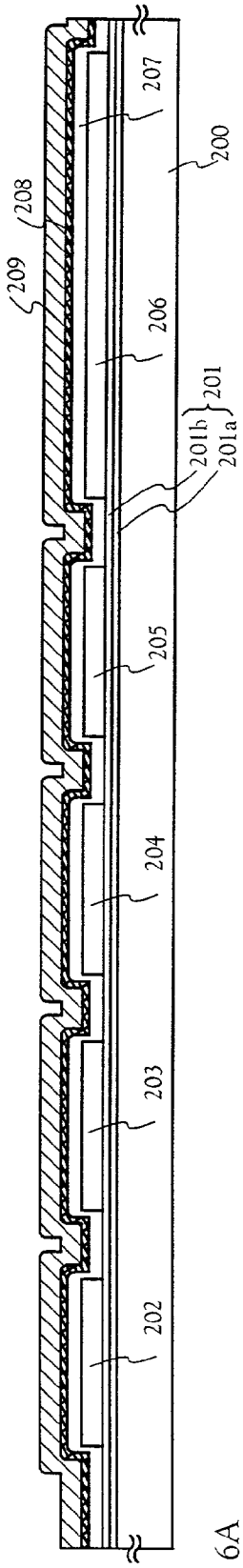

FIG. 6A

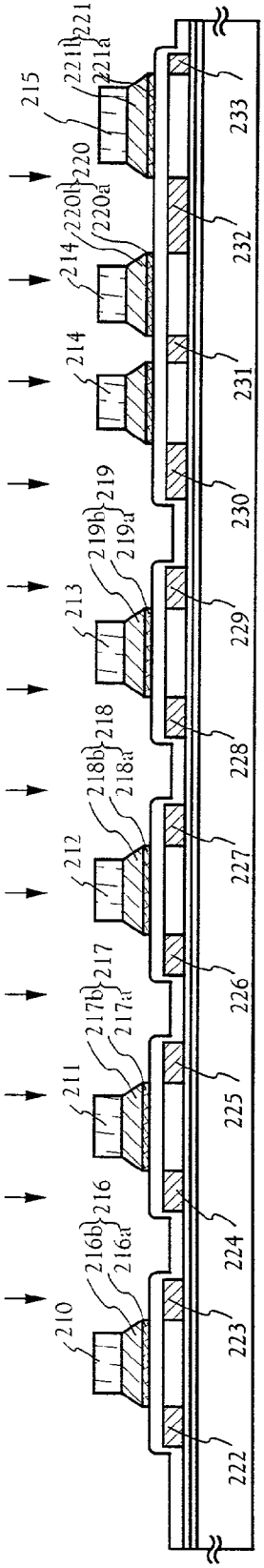

FIG. 6B

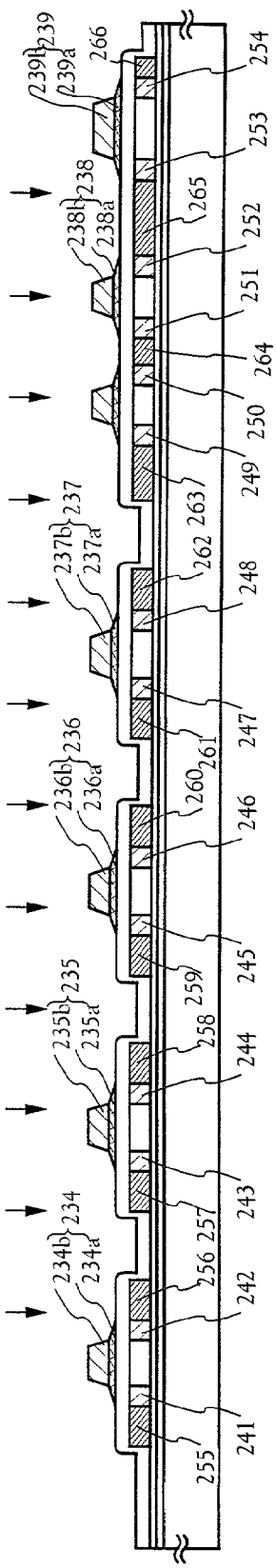

FIG. 6C

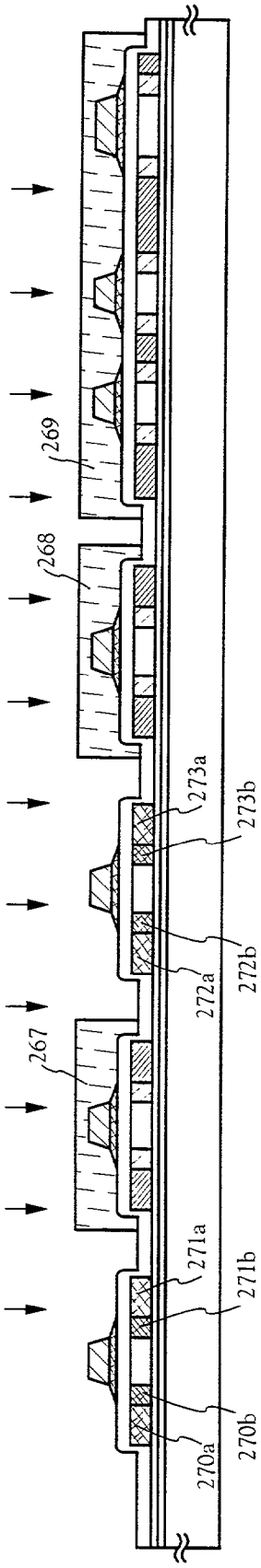

FIG. 7A

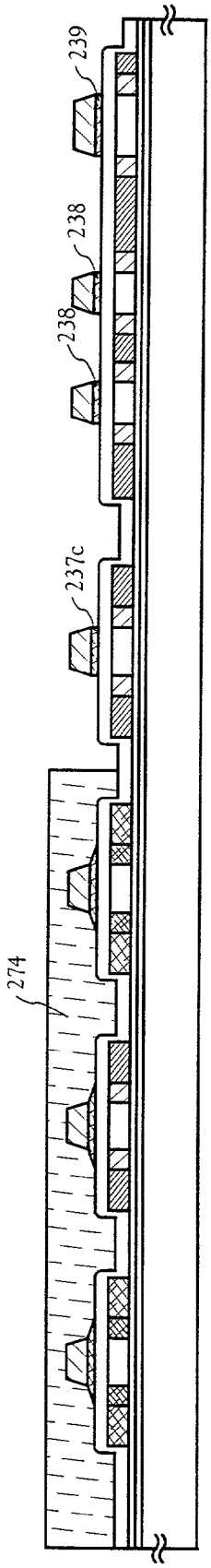

FIG. 7B

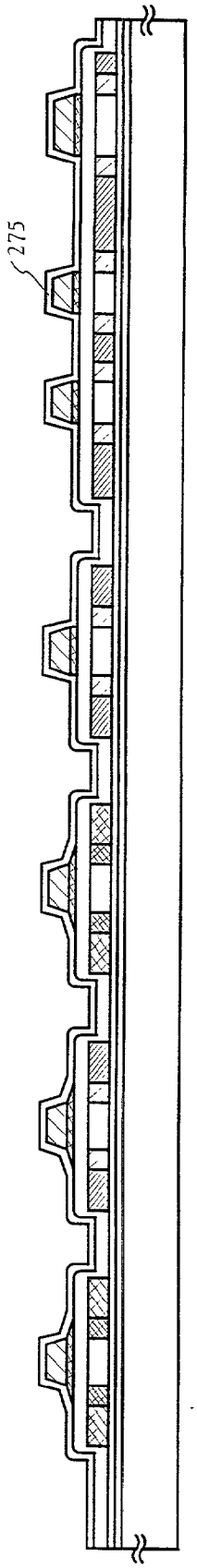

FIG. 7C

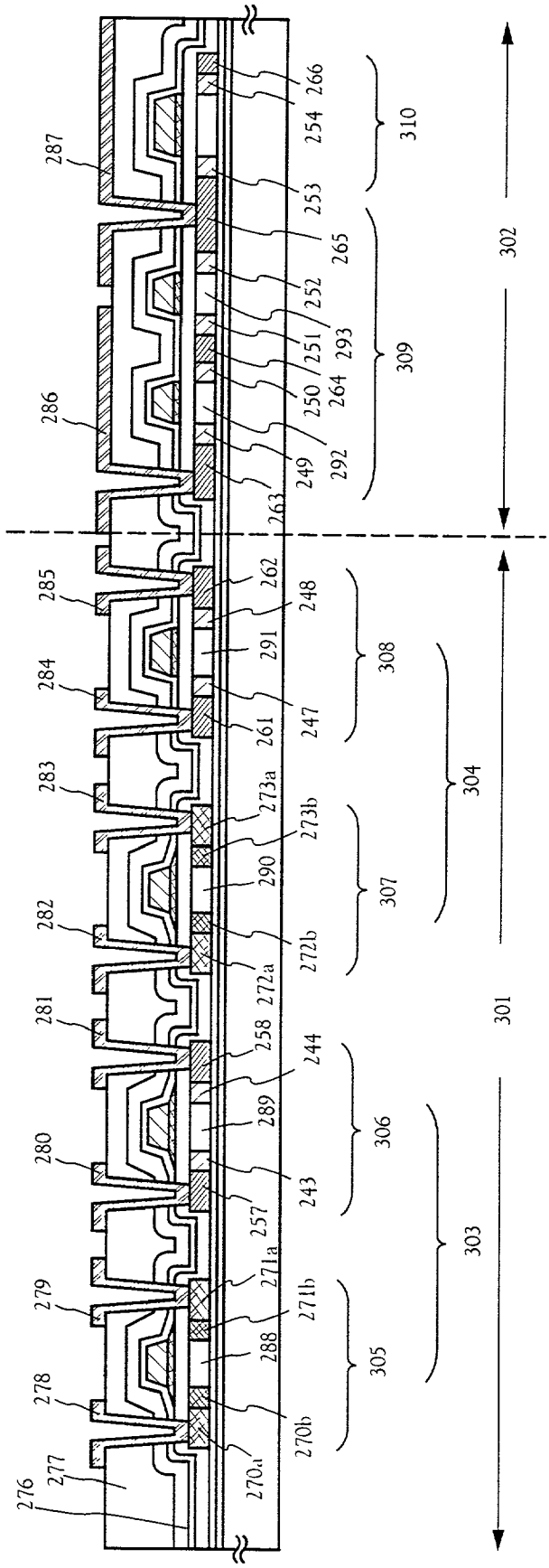
276
277
278
279
280
281
282
283
284
285
286
287
270a
270b
271a
271b
272a
272b
273a
273b
243
244
247
248
249
250
251
252
253
254
257
258
261
262
263
264
265
266
288
289
290
291
292
293
301
302
303
304
305
306
307
308
309
310

FIG. 8

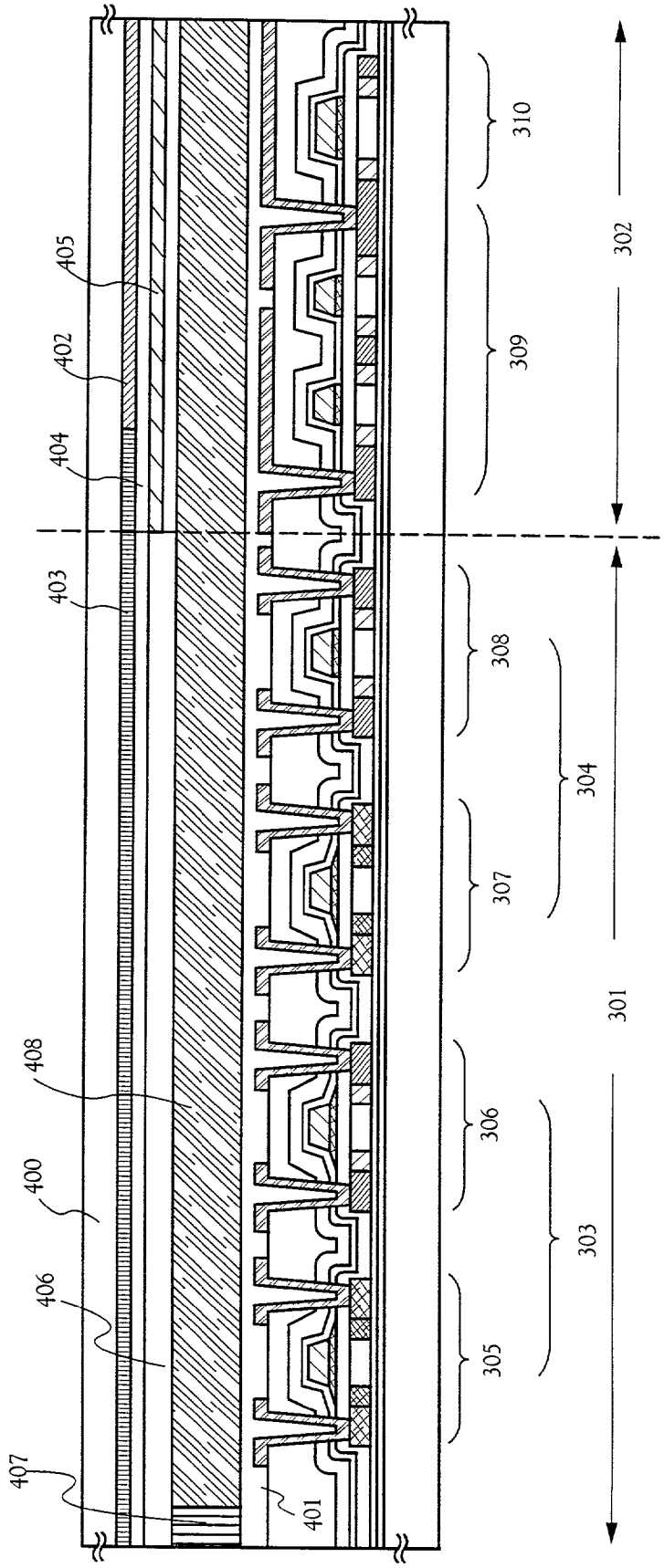
405
402
404
403
408
400
406
407
401
310
309
308
307
306
305
302
304
301
303

FIG. 9

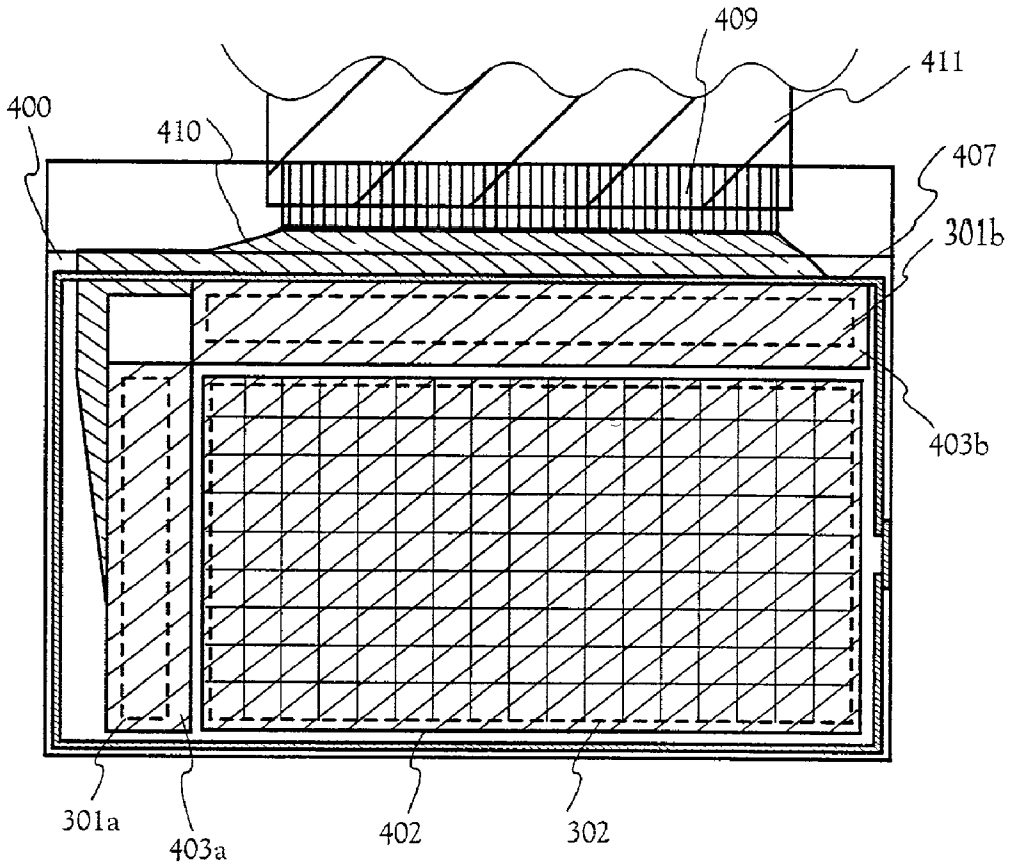

FIG. 10

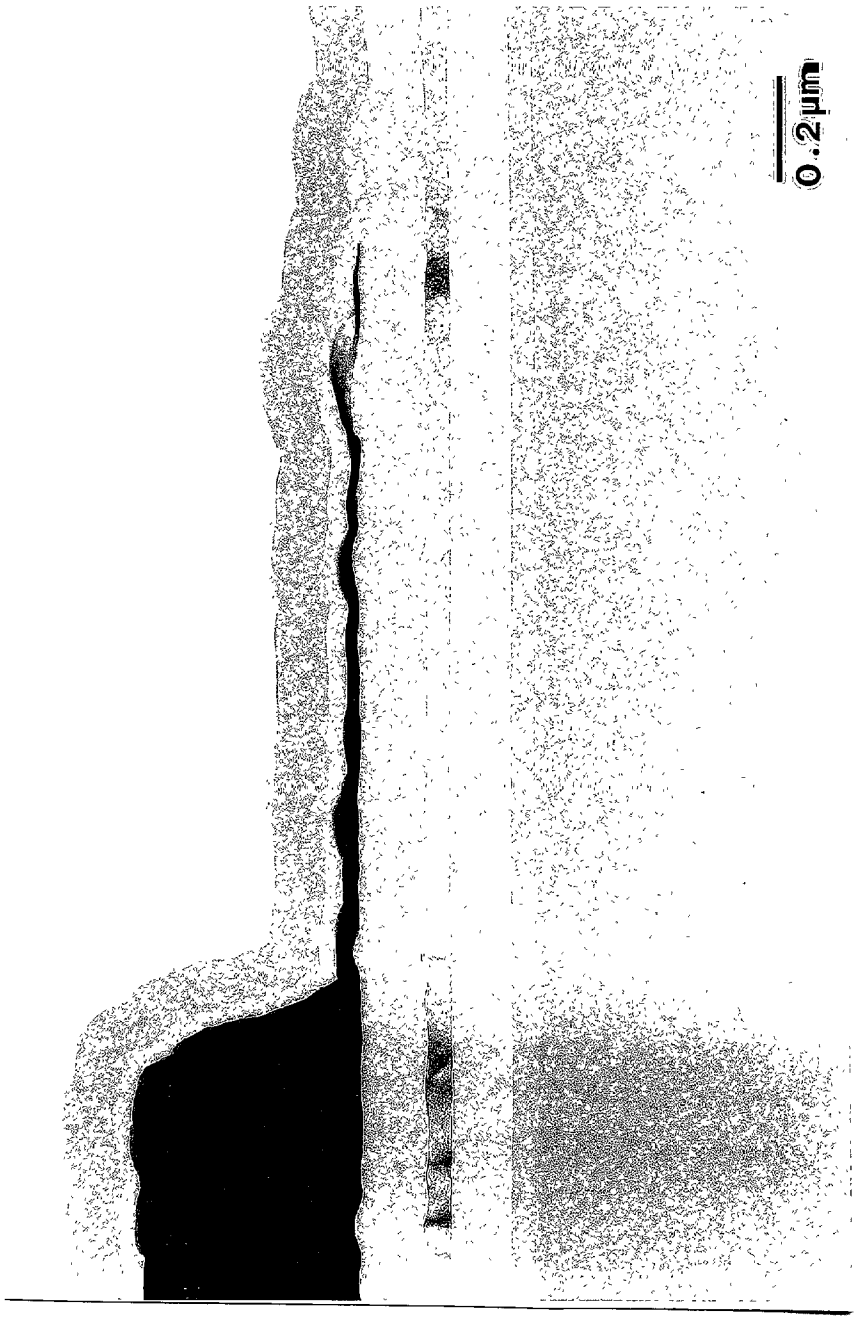

TEM PHOTOGRAPH
(CROSS SECTION)

FIG. 11

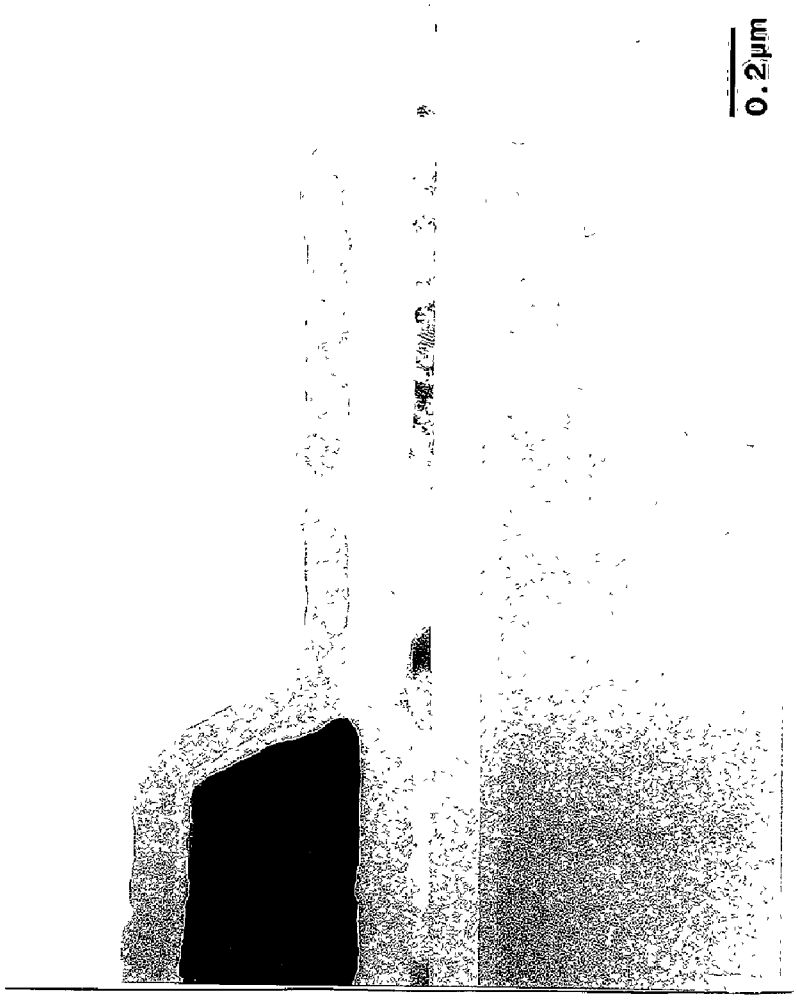

TEM PHOTOGRAPH
(CROSS SECTION)

FIG. 12

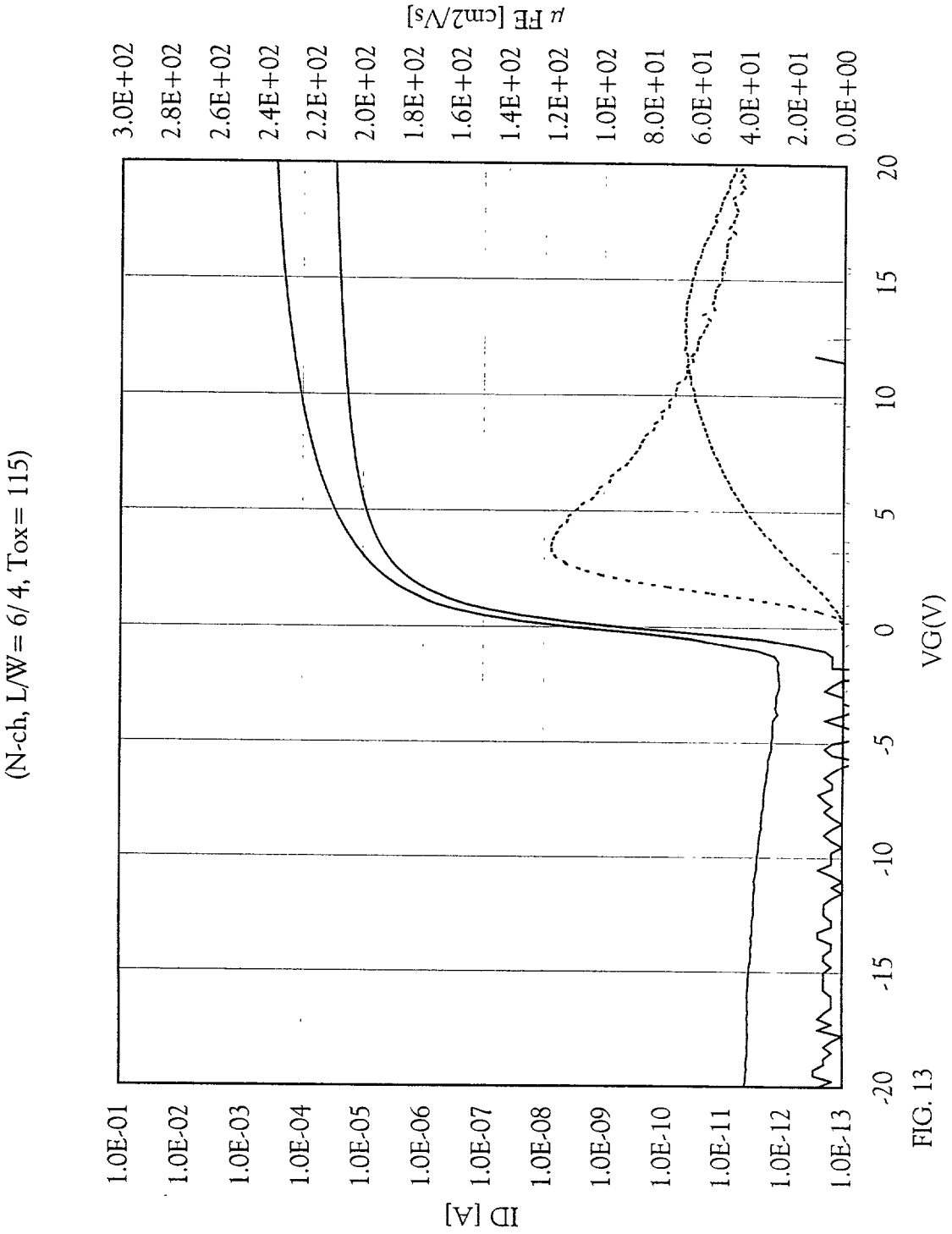
(N-ch, L/W= 6/ 4, Tox= 115)
ID [A]
1.0E-01
1.0E-02
1.0E-03
1.0E-04
1.0E-05
1.0E-06
1.0E-07
1.0E-08
1.0E-09
1.0E-10
1.0E-11
1.0E-12
1.0E-13
μ FE [cm2/Vs]
3.0E+02
2.8E+02
2.6E+02
2.4E+02
2.2E+02
2.0E+02
1.8E+02
1.6E+02
1.4E+02
1.2E+02
1.0E+02
8.0E+01
6.0E+01
4.0E+01
2.0E+01
0.0E+00
-20
-15
-10
-5
0
5
10
15
20
VG(V)

FIG. 13

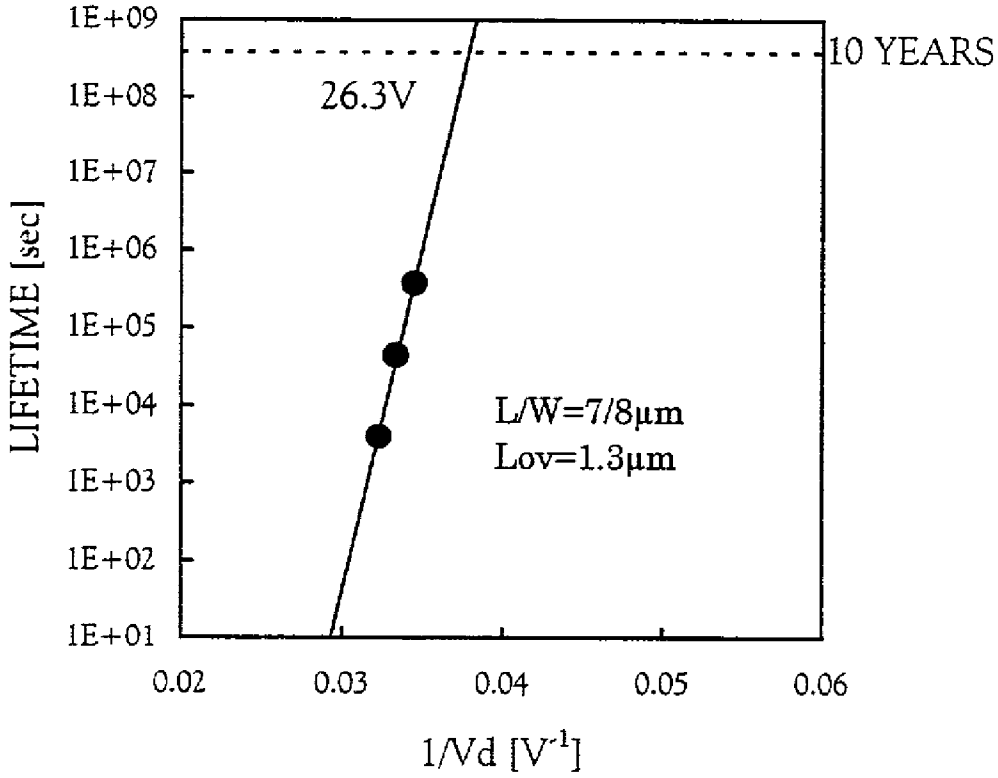

FIG. 14 DRIVING CIRCUIT TFT 10-YEAR GUARENTEE VOLTAGE

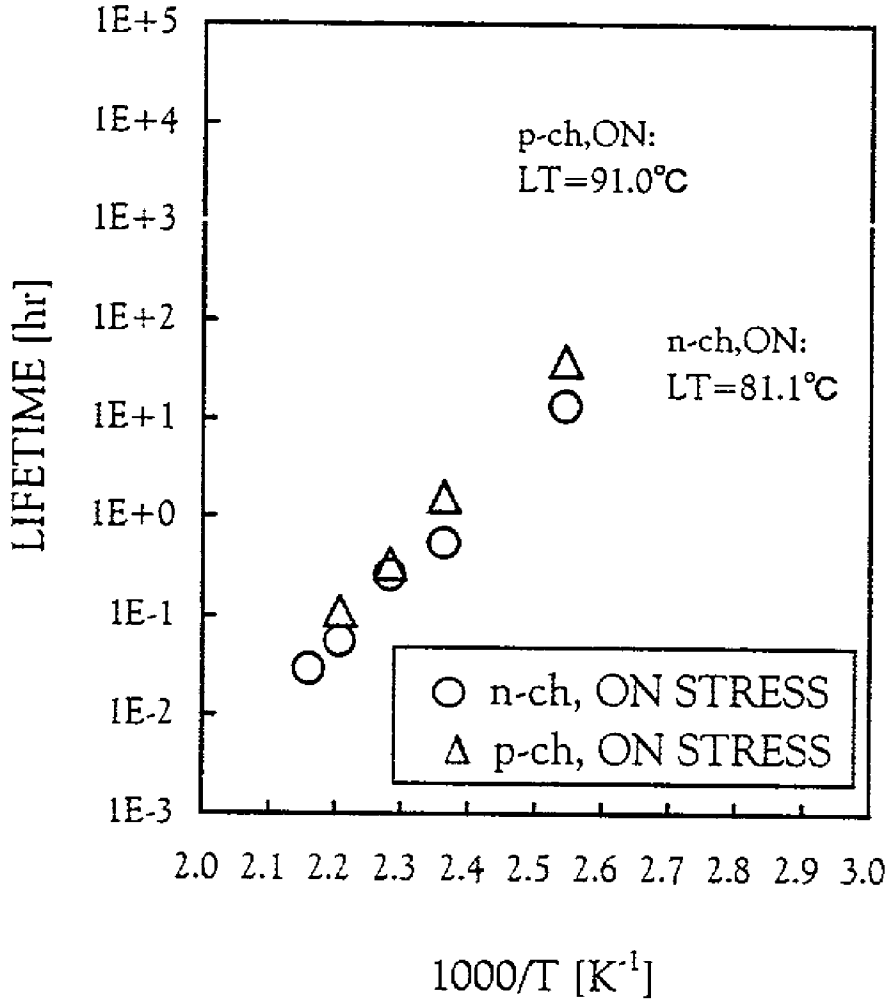

FIG. 15

1000-HOUR LIFETIME TEMPERATURE UNDER ON STRESS
(Δshift_1=0.1V)

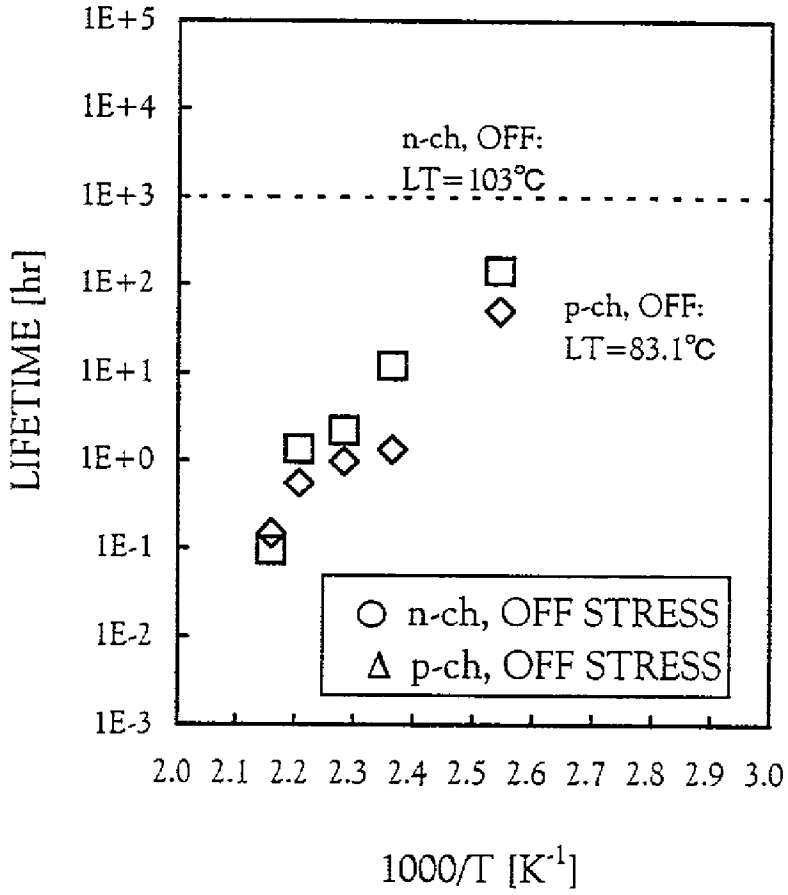

1000-HOUR LIFETIME TEMPERATURE
UNDER OFF STRESS
(Δshift_1=0.1V)

FIG. 16

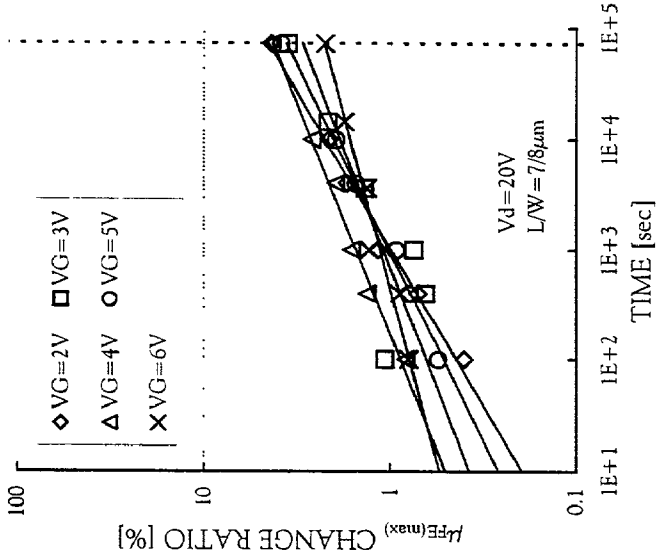

CHARACTERISTICS CHANGE OF
N-CHANNEL TFT
UNDER TRANSIENT STRESS

FIG. 17A

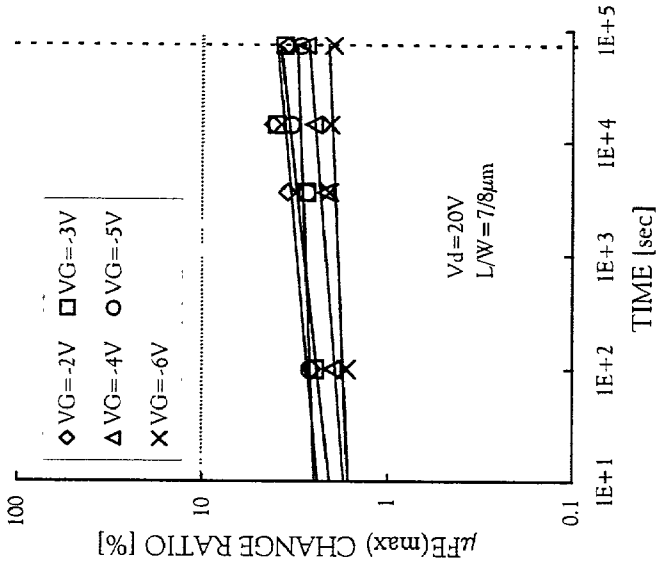

CHARACTERISTICS CHANGE OF
P-CHANNEL TFT
UNDER TRANSIENT STRESS

FIG. 17B

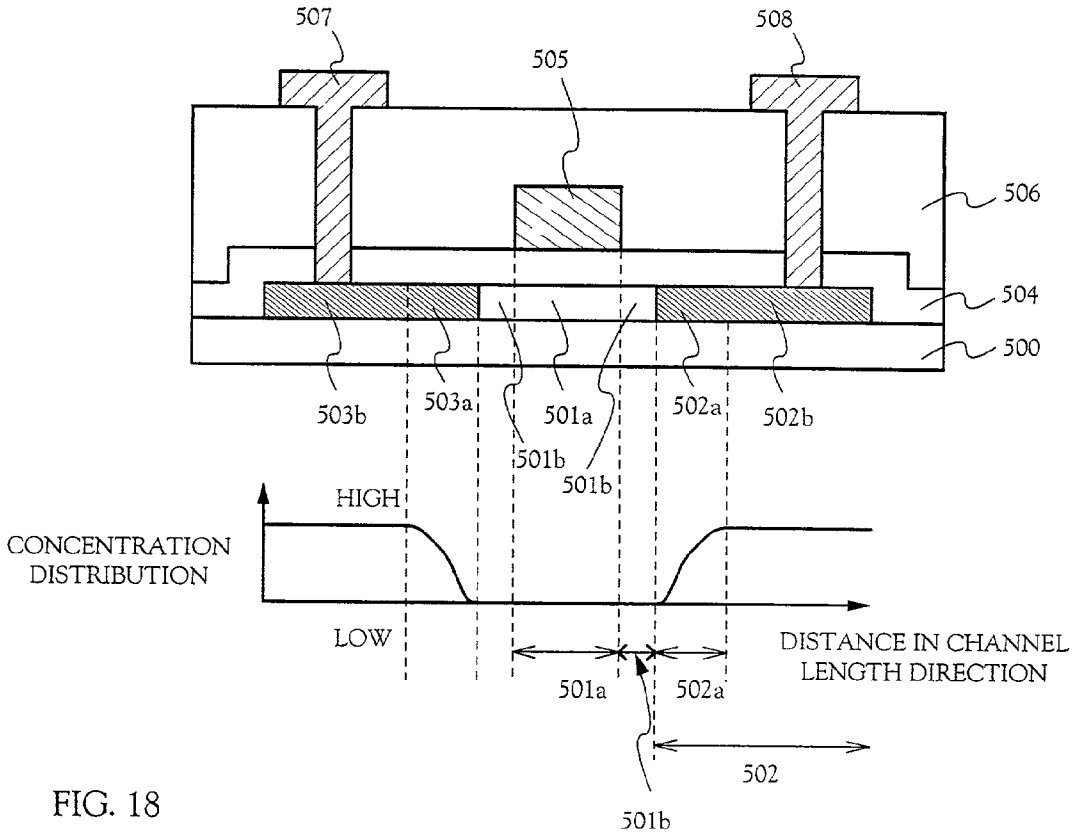
507
508
505
506
504
500
503b
503a
501a
502a
502b
501b
501b
HIGH
CONCENTRATION DISTRIBUTION
LOW
DISTANCE IN CHANNEL LENGTH DIRECTION
501a
502a
502
501b

FIG. 18

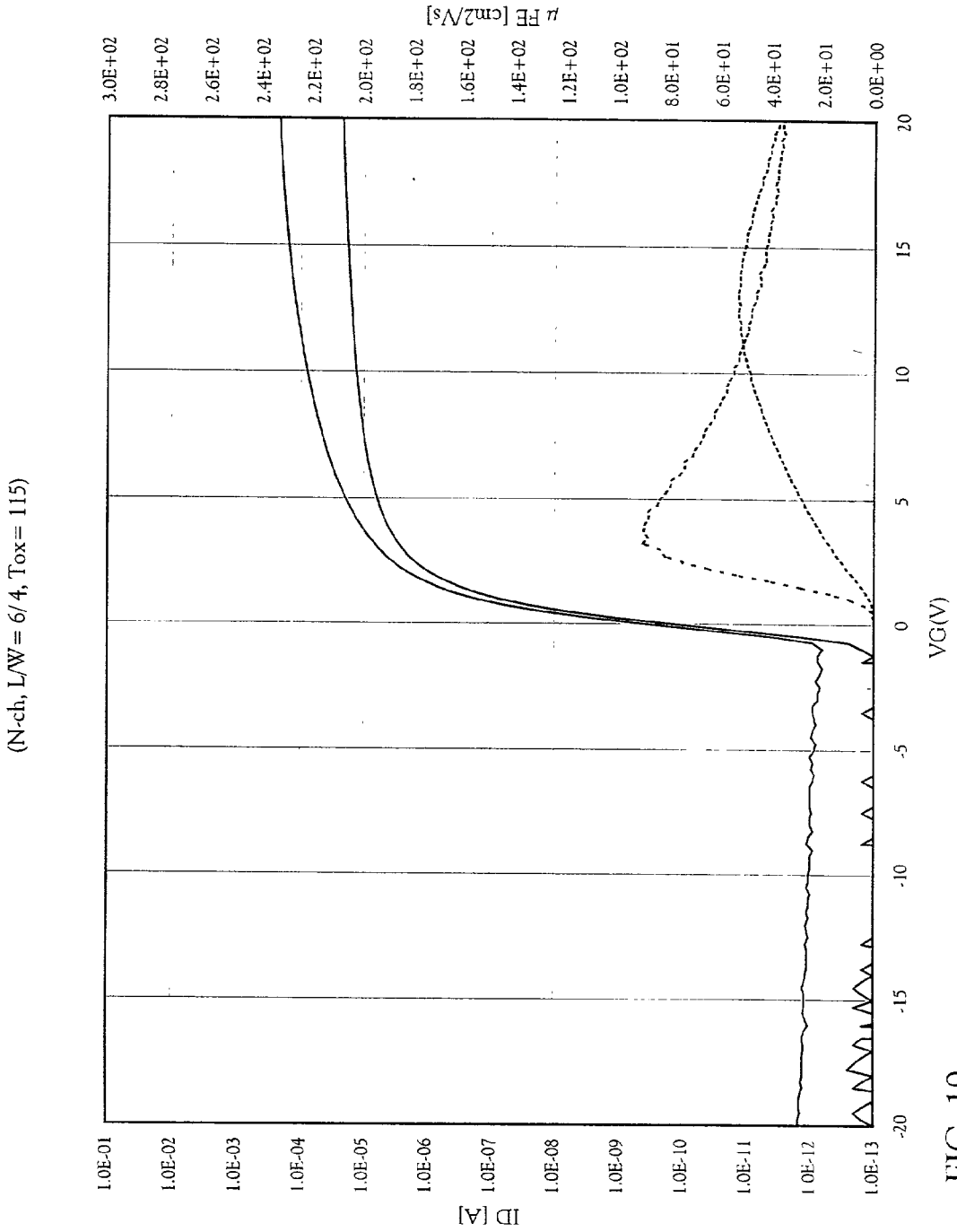
(N-ch, L/W= 6/4, Tox= 115)
ID [A]
1.0E-01
1.0E-02
1.0E-03
1.0E-04
1.0E-05
1.0E-06
1.0E-07
1.0E-08
1.0E-09
1.0E-10
1.0E-11
1.0E-12
1.0E-13
μ FE [cm2/Vs]
3.0E+02
2.8E+02
2.6E+02
2.4E+02
2.2E+02
2.0E+02
1.8E+02
1.6E+02
1.4E+02
1.2E+02
1.0E+02
8.0E+01
6.0E+01
4.0E+01
2.0E+01
0.0E+00
-20
-15
-10
-5
0
5
10
15
20
VG(V)

FIG. 19

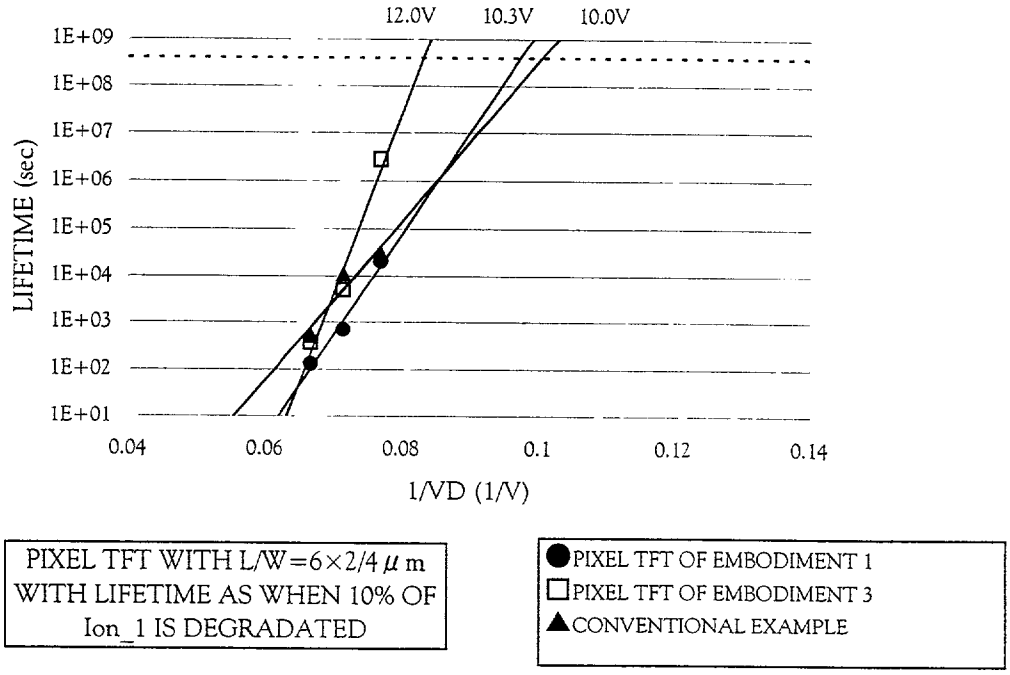

FIG. 20 MEASUREMENT RESULT OF 10-YEAR GUARANTEE

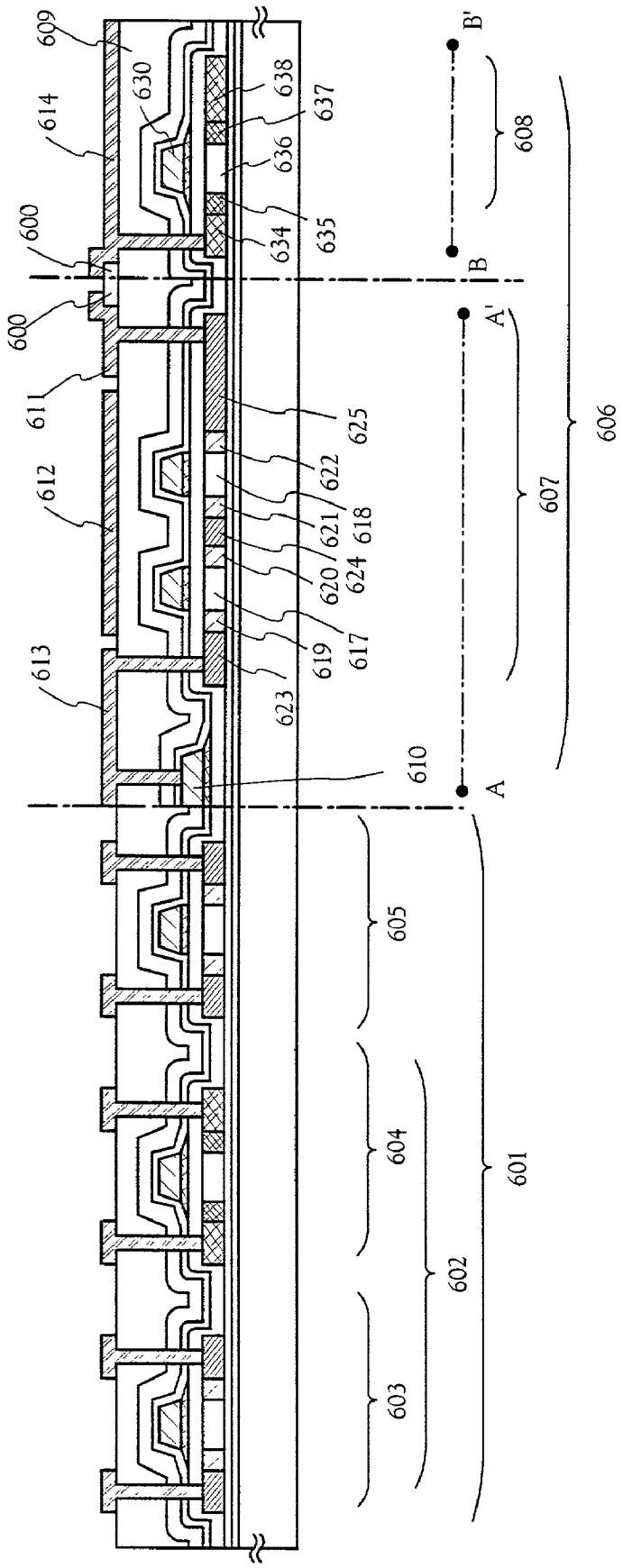
609
614
600
600
611
612
613
630
638
637
636
635
634
625
622
621
618
620
624
619
617
623
610
B'
B
A'
A
608
607
606
605
604
603
602
601

FIG. 21

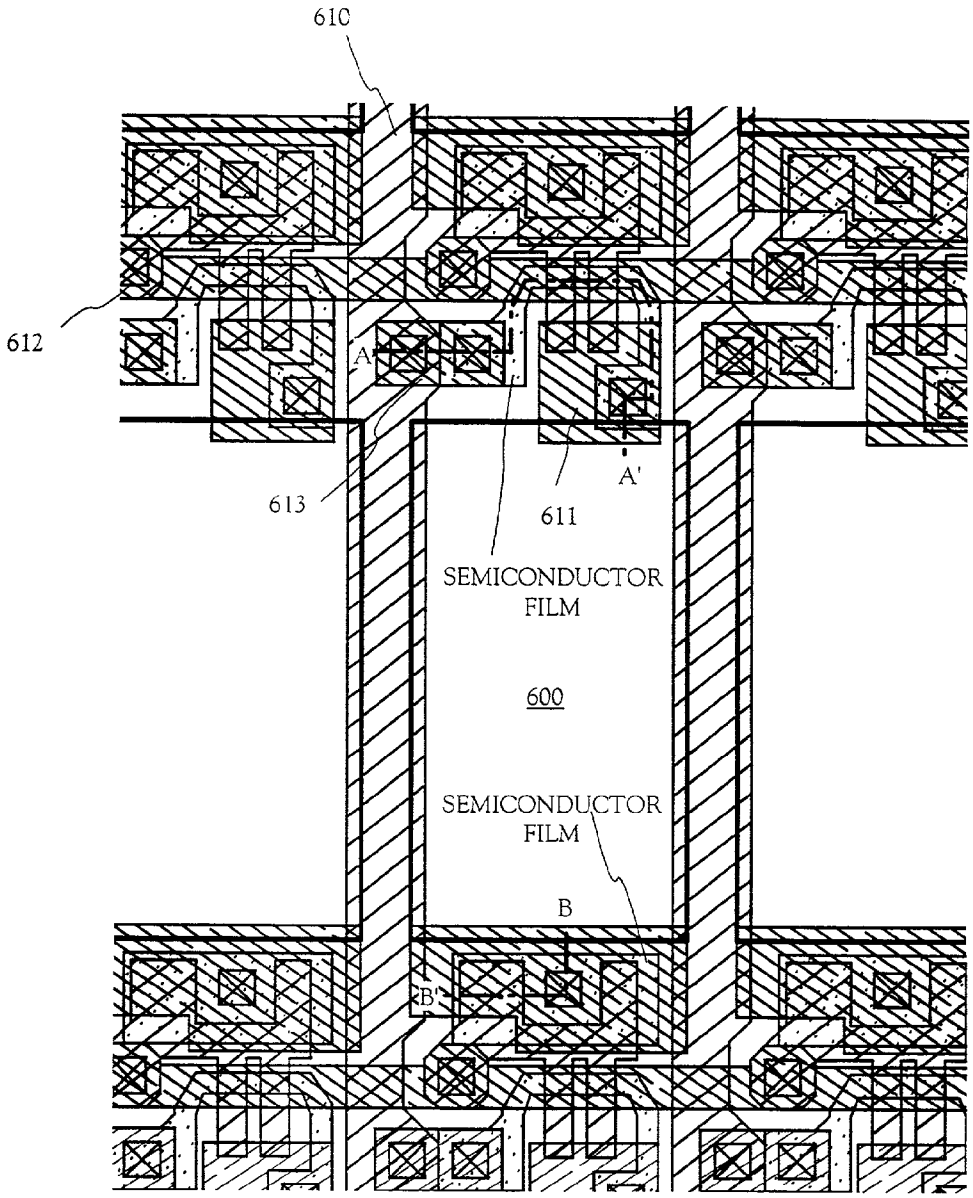
610
612
A
613
611
A'
SEMICONDUCTOR
FILM
600
SEMICONDUCTOR
FILM
B
B'

FIG. 22

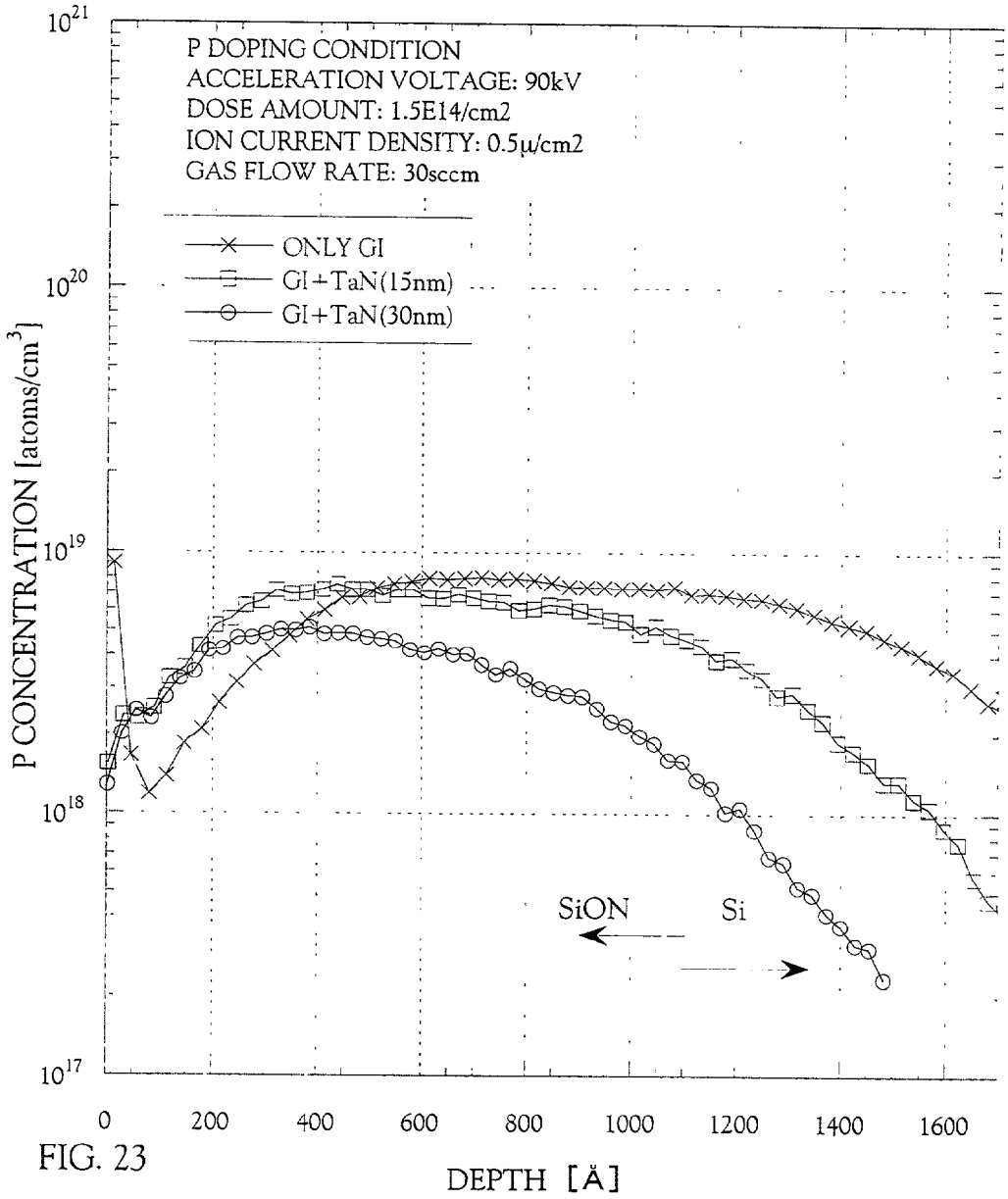

FIG. 23

PHOSPHORUS CONCENTRATION DISTRIBUTION (SIMS ANALYSIS) IN GI (SiON: 1100Å) AND SEMICONDUCTOR LAYER (Si) IN SECOND DOPING PROCESS

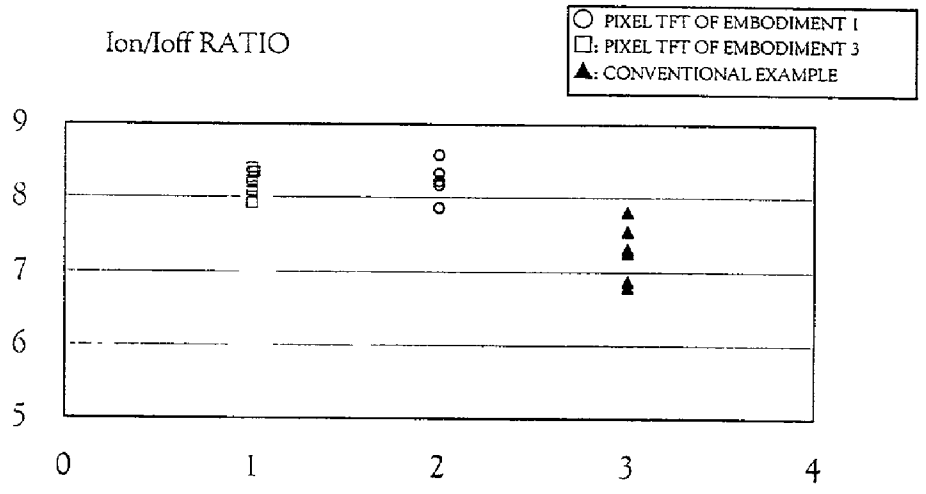
Ion/Ioff RATIO
PIXEL TFT OF EMBODIMENT 1
PIXEL TFT OF EMBODIMENT 3
CONVENTIONAL EXAMPLE
9
8
7
6
5
0
1
2
3
4

FIG. 24

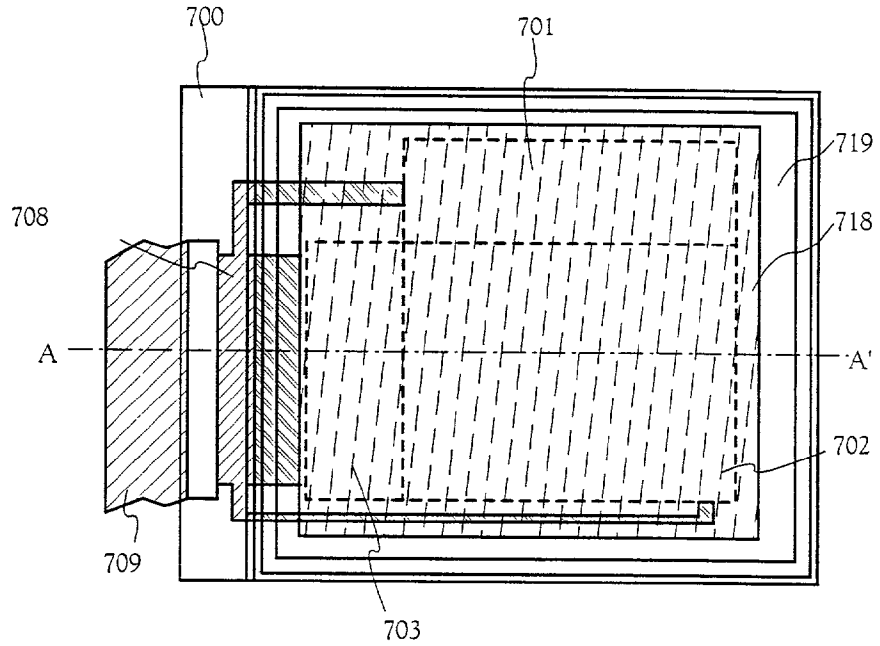

FIG. 25A

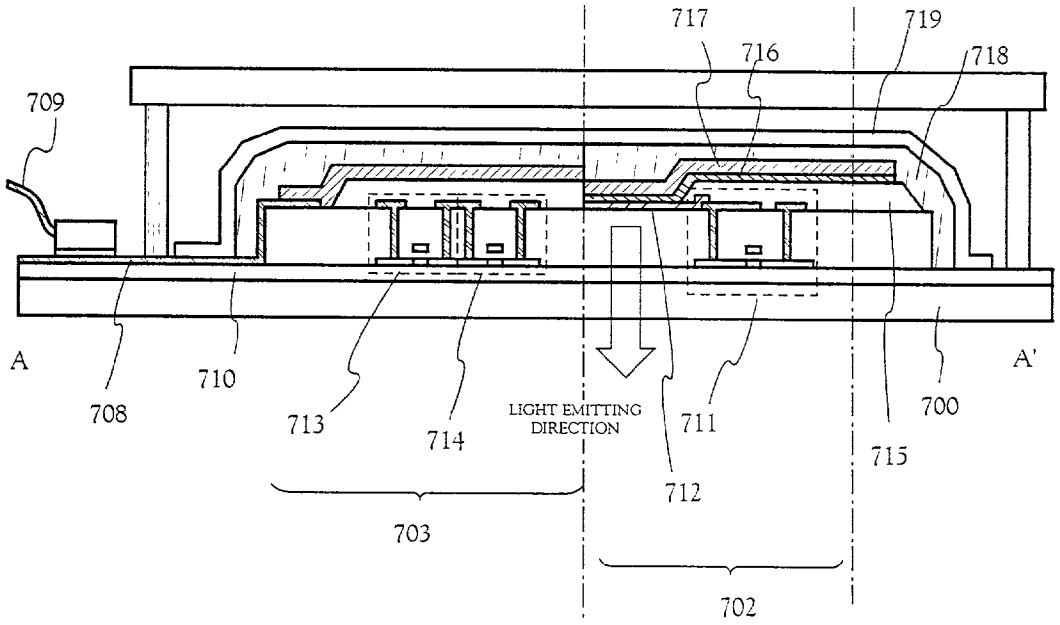

FIG. 25B

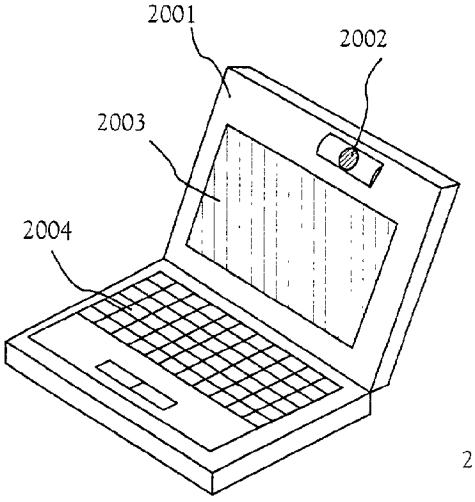

FIG. 26A

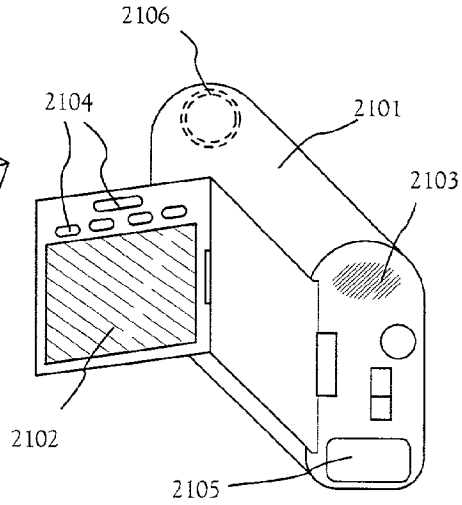

FIG. 26B

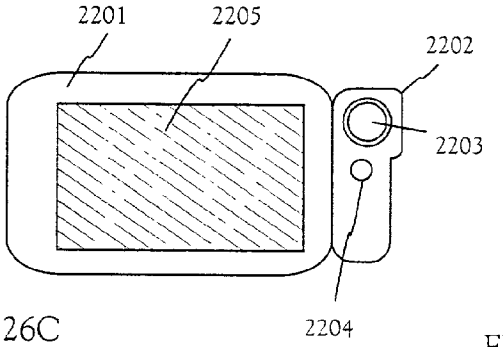

FIG. 26C

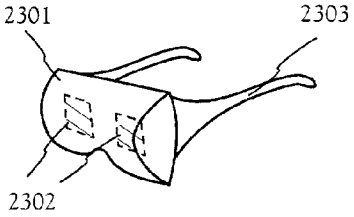

FIG. 26D

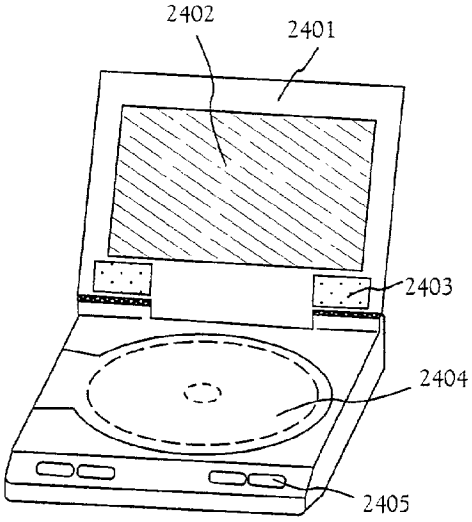

FIG. 26E

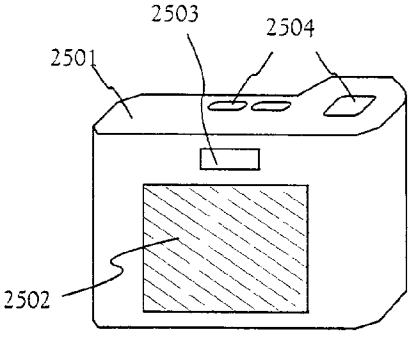

FIG. 26F

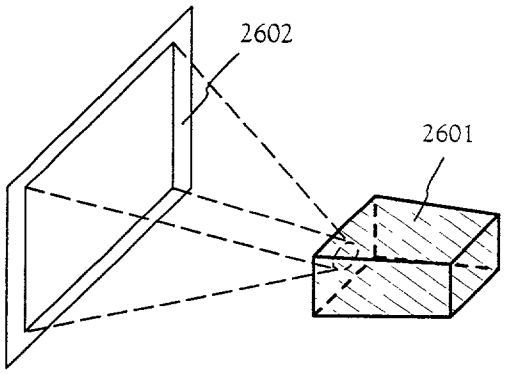

FIG. 27A

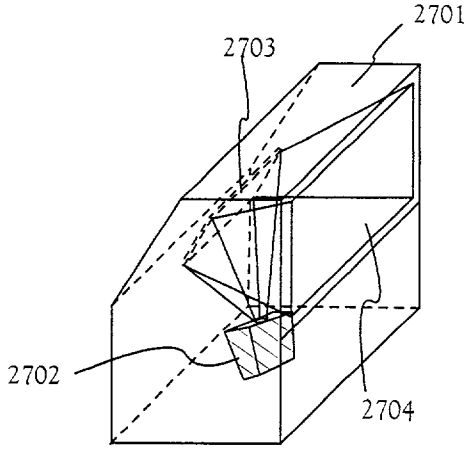

FIG. 27B

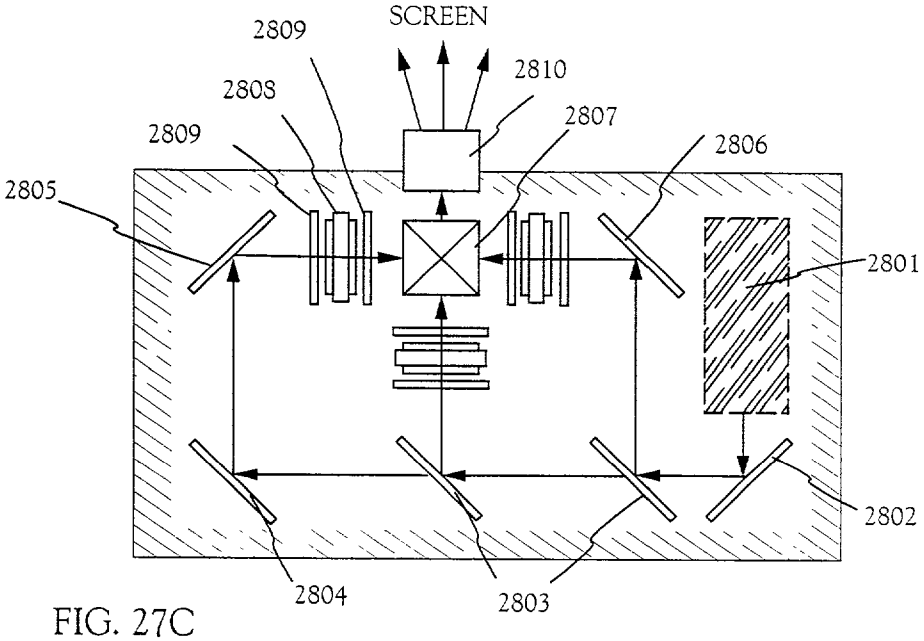

FIG. 27C

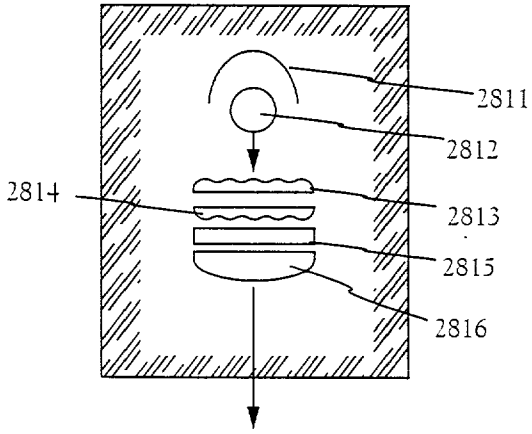

FIG. 27D

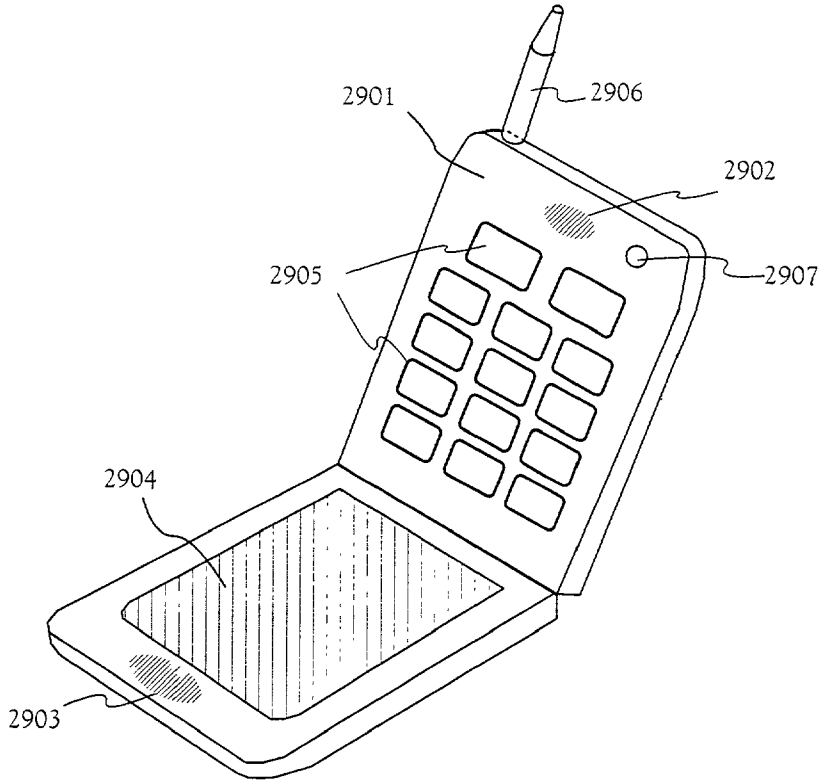

FIG. 28A

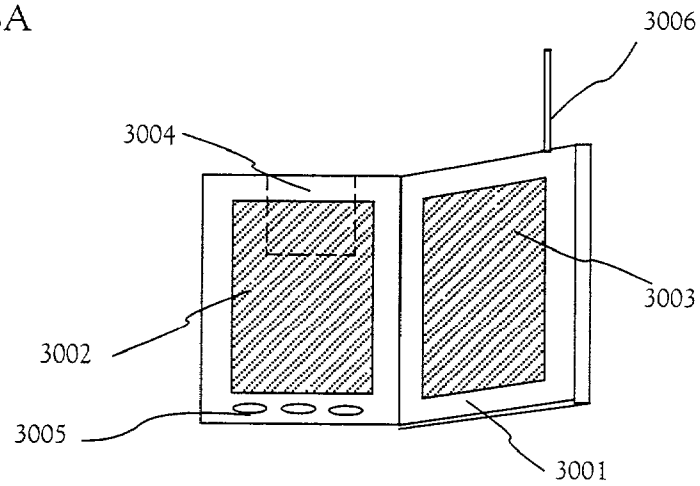

FIG. 28B

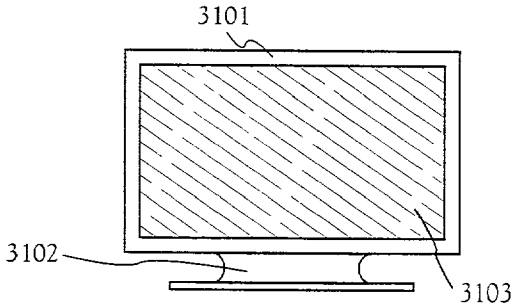

FIG. 28C

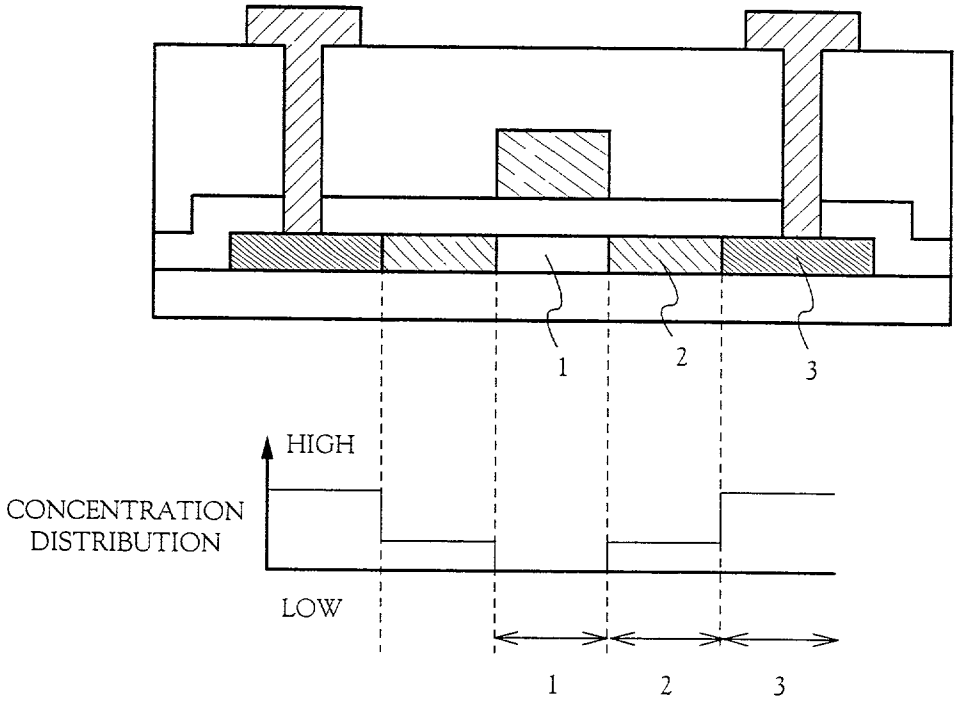

PRIOR ART

FIG. 29

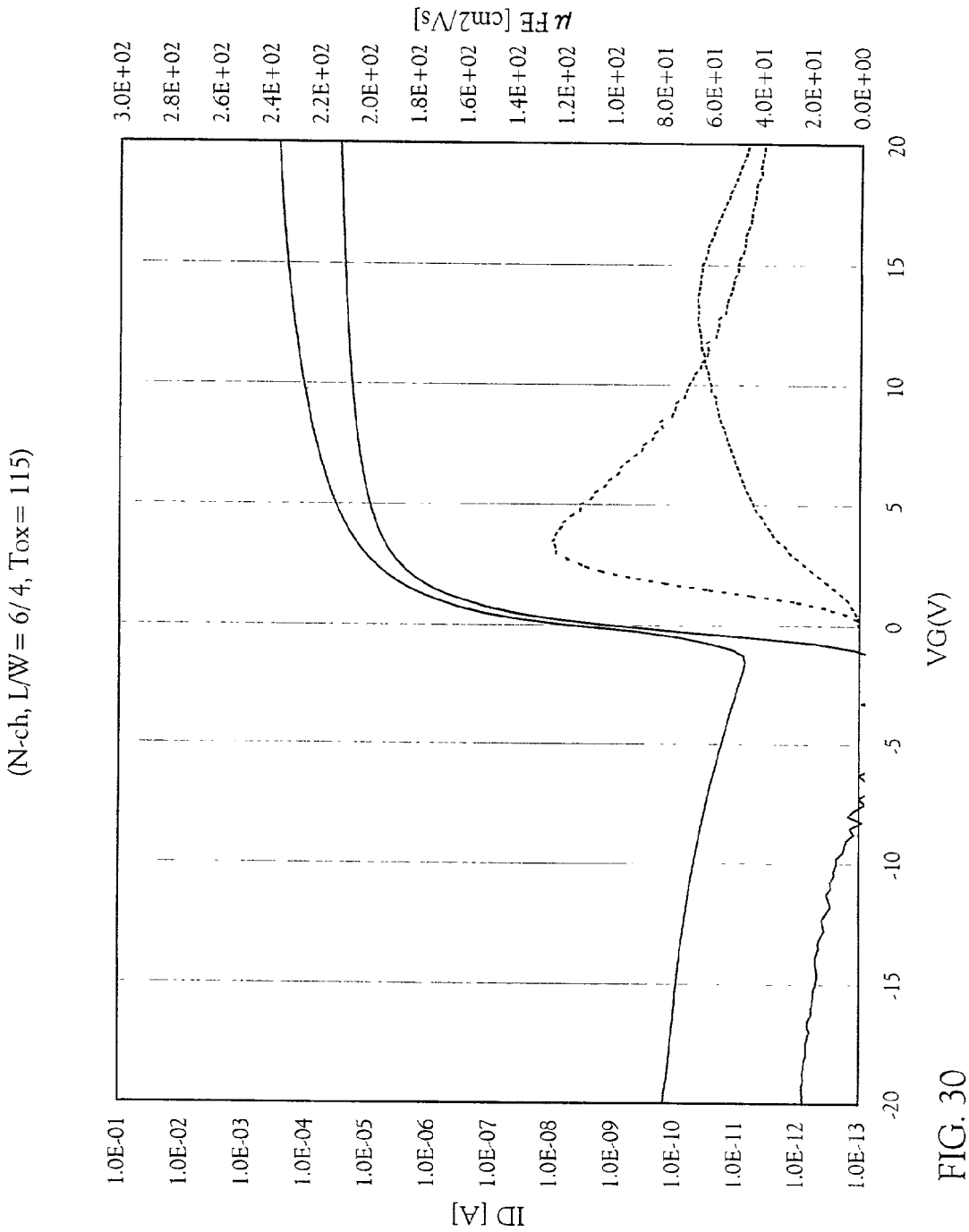
(N-ch, L/W= 6/4, Tox= 115)
ID [A]
1.0E-01
1.0E-02
1.0E-03
1.0E-04
1.0E-05
1.0E-06
1.0E-07
1.0E-08
1.0E-09
1.0E-10
1.0E-11
1.0E-12
1.0E-13
μFE [cm2/Vs]
3.0E+02
2.8E+02
2.6E+02
2.4E+02
2.2E+02
2.0E+02
1.8E+02
1.6E+02
1.4E+02
1.2E+02
1.0E+02
8.0E+01
6.0E+01
4.0E+01
2.0E+01
0.0E+00
-20
-15
-10
-5
0
5
10
15
20
VG(V)

FIG. 30

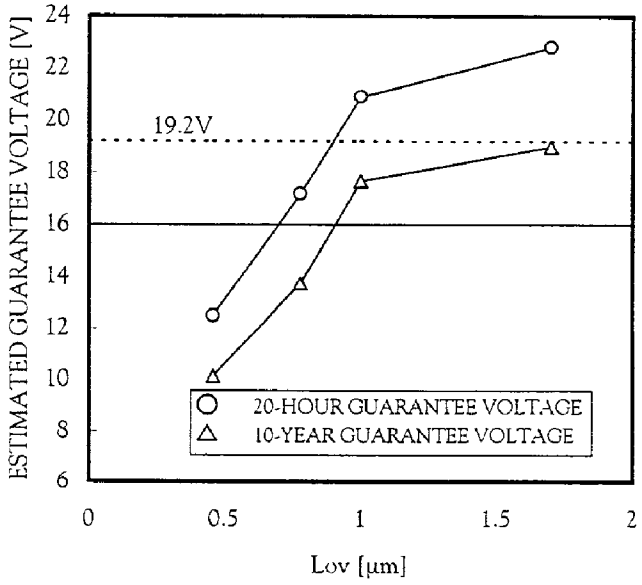

FIG. 31

DEPENDENCE ON Lov LENGTH OF ESTIMATED GUARANTEE VOLTAGE
(10% OF ON CURRENT IS DEGRADATED)
(Lg/W=10/8 μ m)

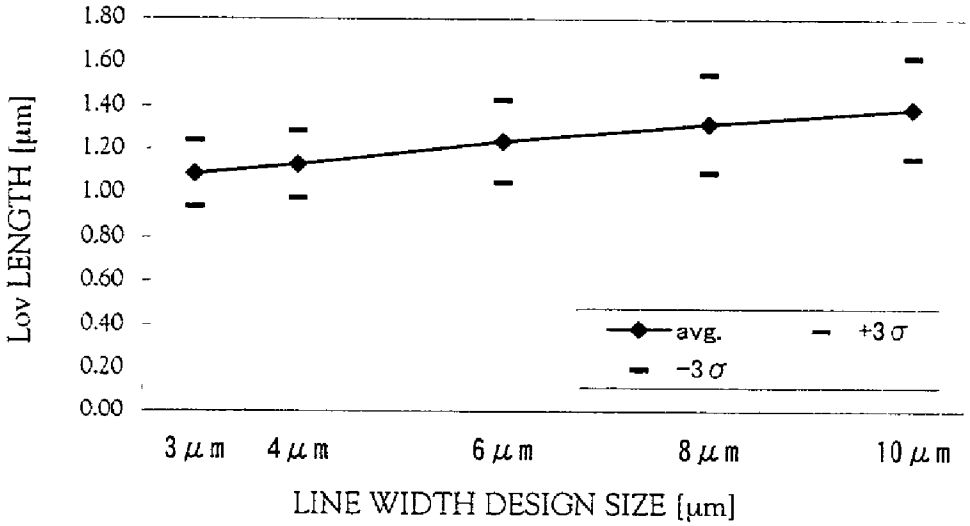

VARIATION OF LINE WIDTH DESIGN SIZE AND Lov LENGTH

FIG. 32

SEMICONDUCTOR DEVICE AND METHOD OF MANUFACTURING THE SAME

BACKGROUND OF THE INVENTION

[0001] 1. Field of the Invention

[0002] The present invention relates to a semiconductor device having a circuit composed of thin film transistors (hereinafter, referred to as "TFTs"), and a method of manufacturing the same. In particular, the present invention relates to electronic equipment provided with a liquid crystal module, an EL module, and the like as its parts.

[0003] In the present specification, a semiconductor device refers to all the devices that function by using semiconductor characteristics, and includes an electro optical device, a light-emitting device, a semiconductor circuit, and electronic equipment.

[0004] 2. Description of the Related Art

[0005] In recent years, semiconductor devices have been developed, which include a large integrated circuit formed of thin film transistors (TFTs), each TFT being formed of semiconductor films (thickness: about several nm to about several hundreds of nm) provided over a substrate having an insulating surface. Representative examples of the semiconductor device include an active matrix type liquid crystal module, an EL module, and a contact type image sensor. In particular, a TFT (hereinafter, referred to as a "polysilicon TFT") utilizing a crystalline silicon film (typically, a polysilicon film) has high electric field effect mobility, so that it is capable of forming a circuit with various functions.

[0006] For example, in a liquid crystal module provided in a liquid crystal display apparatus, on the functional block basis a pixel circuit for conducting a pixel display, and a driving circuit for controlling pixel circuits such as a shift register circuit, a level shifter circuit, a buffer circuit, and a sampling circuit based on a CMOS circuit are formed on one substrate.

[0007] Furthermore, in a pixel circuit of an active matrix type liquid crystal module, a TFT (pixel TFT) is disposed for each of several tens to several millions of pixels, respectively, and a pixel electrode is provided for each pixel TFT. A counter electrode is provided on a substrate opposite to the pixel electrode with liquid crystal therebetween. Thus, a kind of capacitor using liquid crystal as a dielectric is formed. A voltage applied to each pixel is controlled by a switching function of a TFT, and liquid crystal is driven by controlling a charge to the capacitor, whereby the amount of transmitted light is controlled to display an image.

[0008] A pixel TFT is made of an n-channel TFT, and functions as a switching element to drive liquid crystal by applying a voltage. Liquid crystal is driven with an A.C. voltage, so that a system called frame inversion driving is mostly adopted. According to this system, in order to suppress power consumption, a pixel TFT is required to have characteristics of keeping an OFF current value (drain current flowing during an off operation of a TFT) sufficiently low.

[0009] As a structure of a TFT for reducing an OFF current value, a lightly doped drain (LDD) structure is known. In this structure, a region (called an LDD region) with low-concentration impurity elements added thereto is provided between a channel forming region and a source region/drain region formed by adding high-concentration impurity elements thereto.

[0010] In the case where a typical LDD region is formed in a conventional pixel TFT, an OFF current value can be reduced. However, an ON current value is also decreased. Although a typical LDD structure can suppress an OFF current value, the ability of the LDD structure of alleviating an electric field in the vicinity of a drain to prevent degradation due to hot carrier injection is low.

[0011] Furthermore, as means for preventing a decrease in an ON current value due to hot carriers, a so-called GOLD (gate-drain overlapped LDD) structure is known in which an LDD region and a gate electrode are overlapped with each other via a gate insulating film. In such a structure, an electric field intensity in the vicinity of a drain is alleviated to prevent injection of hot carriers, which is effective for preventing a degradation phenomenon.

[0012] Furthermore, a GOLD structure has a high ability of preventing a decrease in an ON current value, whereas it has a high OFF current value compared with a typical LDD structure. Thus, the GOLD structure is not preferable for being applied to a typical TFT.

[0013] In a semiconductor device having a plurality of integrated circuits such as an active matrix type liquid crystal display apparatus, the above-mentioned problems become conspicuous particularly in a crystalline silicon TFT, and they become more conspicuous as the performance required for an active matrix type liquid crystal display apparatus is enhanced.

SUMMARY OF THE INVENTION

[0014] Therefore, with the foregoing in mind, it is an object of the present invention to enhance operation characteristics and to lower power consumption in an electro optical apparatus and a semiconductor device such as an active matrix type liquid crystal display apparatus manufactured using a TFT.

[0015] In particular, it is an object of the present invention to obtain a structure of a pixel TFT (n-channel TFT) with a low OFF current value. It is another object of the present invention to obtain a structure of a pixel TFT having a high ratio of an ON current value to an OFF current value.

[0016] As shown in **FIG. 1A**, the present invention is characterized in that an impurity region **102** includes a region **102***a* having a concentration gradient in which a concentration of an impurity element imparting one conductivity type is increased with distance (in a channel length direction) from a channel forming region.

[0017] More specifically, the present invention is characterized in that there is provided an impurity region in which a concentration of an impurity element (phosphorus) is gradually increased with distance from an end portion of a gate electrode **105** (end portion of the gate electrode in a cross-section in the channel length direction) to a peripheral portion of a semiconductor layer. Thus, in the impurity region, an electric resistance is large on the side of a channel forming region and is small on the side of a peripheral portion of the semiconductor layer.

[0018] Furthermore, according to the present invention, a concentration of an impurity element in the impurity region is continuously increased. Therefore, there is no clear border (boundary). In the present specification, a region of the impurity region **102**, which has an impurity concentration of $1\times10^{20}/cm^3$ or more, is referred to as a drain region **102***b*.

[0019] Although the drain side has been described, it is preferable to design a source side in the same way as in the drain side in the case of a pixel TFT. In an impurity region on the source side, a region **103***a* is formed, having a concentration gradient in which a concentration of an impurity element imparting one conductivity type is increased with distance from the channel forming region. Furthermore, in the present specification, a region of the impurity region on the source side, having an impurity concentration of $1\times10^{20}/cm^3$ or more, is referred to as a source region **103***b*.

[0020] The present invention is characterized in that a TFT having a considerably low OFF current value and a high ratio of an ON current value to an OFF current value is realized by intentionally forming the regions **102***a* and **103***a* having the above-mentioned concentration gradient. The gate electrode **105** is overlapped with a channel forming region **101** via a gate insulating film **1**. However, it is not overlapped with the impurity region **102**. As shown in **FIG. 1**A, reference numeral **100** denotes a substrate having an insulating surface, **106** denotes an interlayer insulating film, **107** denotes a source electrode, and **108** denotes a drain electrode.

[0021] In a conventional TFT structure, as shown in **FIG. 29**, there is a clear border due to a difference in concentration, and a concentration is varied in a step-like form among a channel forming region **1**, a low-concentration impurity region **2**, and a high-concentration impurity region **3**. That is, a discontinuous concentration distribution is exhibited. In addition, the concentration of each region is almost constant. Thus, in the prior art, the difference in concentration at a border (boundary) between the high-concentration impurity region **3** and the low-concentration impurity region **2**, and the difference in concentration at a border (boundary) between the low-concentration impurity region **2** and the channel forming region **1** are relatively large. Therefore, an electric field is concentrated in the vicinity of each border.

[0022] An OFF current flows due to a quantum mechanical effect such as tunneling current between bands, so that it is mainly influenced by an electric field. Therefore, an electric field concentrated at a border causes an OFF current value of a TFT to increase. Particularly in the conventional TFT structure, a stronger electric field is concentrated at a border between a channel forming region and a low-concentration impurity region due to a large difference in concentration.

[0023] According to the present invention, an impurity region in which a concentration is continuously increased is provided between the channel forming region and the drain region to eliminate a clear border (boundary) therebetween. Because of this, an electric field concentrated in the vicinity of the border is alleviated to obtain a TFT structure with a low OFF current value.

[0024] According to the present invention, as shown in **FIG. 1**A, it is most desirable that a concentration gradient eliminating a border (boundary) due to the difference in concentration of an impurity element in a semiconductor layer is formed in the impurity region **102** (in a range of $1\times10^{15}/cm^3$ to $1\times10^{21}/cm^3$). However, even by decreasing the difference in concentration between the channel forming region **101** and the impurity region **102***a* in the vicinity thereof, the effects of the present invention are also obtained. Furthermore, even by decreasing the difference in concentration at a border between the high-concentration impurity region **102***b* and the low-concentration impurity region **102***a* in the vicinity thereof, the effects of the present invention can be obtained.

[0025] **FIG. 1B** is a graph showing simulation results in the case where the TFT structure is as shown in **FIG. 1**A, the channel length L is 6 μm, the channel width W is 4 μm, the thickness of the gate insulating film **104** is 115 nm, the thickness of a polysilicon film is 45 nm, the region **102***a* (width: 1.5 μm) has a concentration gradient in a range of an impurity concentration (P concentration) of 1×10^{17} to $1\times10^{18}/cm^3$, the impurity region **102***b* has an impurity concentration (P concentration) of $1\times10^{19}/cm^3$, and the carrier concentration (B concentration) of the channel forming region **101** is $2\times10^{16}/cm^3$. The vertical axis of the graph represents an electric field intensity E on the surface of the semiconductor layer (V/cm), and the horizontal axis represents a distance (μm) from the channel forming region. A solid line in **FIG. 1B** represents a state of an electric field concentrated in the impurity region of the present invention.

[0026] In **FIG. 1B, a** broken line represents, as a conventional example, a state of an electric field concentrated in the low-concentration impurity region **2** under the condition that a concentration distribution in the semiconductor layer of a TFT is as shown in **FIG. 29**.

[0027] As shown in **FIG. 1**B, according to the present invention, there is provided at least an impurity region having a concentration gradient in an impurity concentration (P concentration) of 1×10^{17} to $1\times10^{18}/cm^3$, whereby an electric field intensity on the surface of the semiconductor layer can be alleviated compared with the prior art. Thus, according to the present invention, a TFT can be obtained in which a strong electric field is not concentrated over the entire region of the semiconductor layer, and an OFF current value is low.

[0028] According to the constitution disclosed in the present specification, there is provided a semiconductor device including a TFT having a semiconductor layer formed on an insulating surface, an insulating film (gate insulating film) formed on the semiconductor layer, and a gate electrode formed on the insulating film, wherein the semiconductor layer includes a channel forming region overlapped with the gate electrode, and an impurity region (including an LDD region, a source region, or a drain region) formed in contact with the channel forming region, and the impurity region has a concentration distribution in which a concentration of an impurity element imparting one conductivity type is increased with distance from the channel forming region.

[0029] Furthermore, according to the above-mentioned constitution, the impurity element imparting one conductivity type to the semiconductor layer is phosphorus (P) or arsenic (As), and an n-channel TFT is obtained. The n-channel TFT is suitable for a TFT of a pixel portion due to its low OFF current.

[0030] Furthermore, in the TFT of the pixel portion, even if an offset region is formed between the channel forming region and the low-concentration impurity region, similar reliability can be obtained. **FIG. 18** shows an example thereof.

[0031] According to another constitution of the present invention, there is provided a semiconductor device including a TFT having a semiconductor layer formed on an insulating surface, an insulating film formed on the semiconductor layer, and a gate electrode formed on the insulating film, wherein the semiconductor layer includes a channel forming region overlapped with the gate electrode, an offset region formed in contact with the channel forming region, and an impurity region formed in contact with the offset region, and the impurity region has a concentration distribution in which an impurity concentration is increased with distance from the channel forming region.

[0032] In the above-mentioned constitution, an end portion of the gate electrode is substantially aligned with an interface between the channel forming region and the offset region.

[0033] Furthermore, in a semiconductor device including a pixel portion and a driving circuit on the same insulating surface, it is preferable that a TFT in the pixel portion is made an impurity region not overlapped with the gate electrode with an insulating film (gate insulating film) interposed therebetween. In this case, an end portion of the gate electrode of a pixel TFT is substantially aligned with an interface (border) between the channel forming region and the impurity region.

[0034] In the above-mentioned constitution, the gate electrode of an n-channel TFT of the driving circuit has a taper portion, and the taper portion is overlapped with a part of the impurity region with an insulating film (gate insulating film) interposed therebetween. Since doping is conducted through the taper portion, in the driving circuit, the width of the taper portion is substantially matched with the width of a region having a concentration distribution in which an impurity concentration is increased with distance from the channel forming region. Further, as shown in **FIG. 32**, in a case that a width of wiring to be designed is made long, the taper portion to be formed is also long. Thus, it is preferable to design a width of the gate electrode in the driving circuit larger than a width of the gate electrode in the pixel portion.

[0035] In the above-mentioned structure, an offset region may be provided between the channel forming region of the pixel TFT and the impurity region.

[0036] Furthermore, in each of the above-mentioned constitutions, the gate electrode has a layered structure including a first conductive layer as a lower layer and a second conductive layer as an upper layer. According to the present invention, an impurity region having a concentration gradient is formed utilizing a gate electrode of the layered structure. Thus, the impurity regions in which an impurity concentration is increased with distance from the channel forming region are formed on both sides of the channel forming region.

[0037] Furthermore, in each of the above-mentioned constitutions, the impurity region includes a source region or a drain region.

[0038] In the impurity region, an impurity concentration is increased with distance increased from the channel forming region. **FIG. 1** shows this concentration distribution as a normal distribution. However, the present invention is not limited thereto. The concentration distribution may be an exponential distribution, a linear distribution with a tilt, or a combination thereof It should be noted that it is important to prescribe the width of respective regions **102***a* and **103***a* having the concentration gradient in the channel length direction to be at least 0.5-1.7 μm, preferably 1 μm or more, and to provide a gentle concentration gradient in the regions.

[0039] More specifically, in each of the above-mentioned constitutions, the impurity region includes a region having a concentration distribution in which an impurity concentration is increased, and a region having a substantially constant impurity concentration, and the region having a concentration distribution in which the impurity concentration is increased has a length of 1 μm or more in the channel length direction.

[0040] Furthermore, according to the conventional method, an impurity element enters a lower portion of the gate electrode depending upon the doping conditions, and an impurity region of about 0.1 μm overlapped with the gate electrode and having a concentration gradient may be generated. In this case, it is difficult to obtain the same effects as those of the present invention.

[0041] In the prior art, doping of an impurity element is conducted using a patterned resist mask or in a self-alignment manner using wiring as a mask. Therefore, a step-like concentration distribution is formed as shown in **FIG. 29**, and an impurity region of 0.5 μm or more having the constitution of the present invention (i.e., concentration gradient) cannot be obtained.

[0042] According to the present invention, it is also possible that not only a gate electrode having a layered structure but also a part of an insulating film (gate insulating film) covering a semiconductor layer is tapered, and an impurity region having a concentration gradient is formed by utilizing the insulating film. In this case, the impurity region is characterized in that the thickness of the insulating film is different between a region placed at a largest distance from the channel forming region and a region placed at a smallest distance therefrom. It is also possible to form an impurity region having a concentration gradient using a gate electrode having a taper portion and an insulating film having a taper portion.

[0043] The present invention is also characterized by a manufacturing method for obtaining the above-mentioned structure.

[0044] According to the constitution of the present invention regarding a manufacturing method realizing the above-mentioned structure, there is provided a method of manufacturing a semiconductor device including the steps of forming a semiconductor layer on an insulating surface; forming an insulating film on the semiconductor layer; forming a conductive layer having a taper portion on the insulating film (gate insulating film); adding an impurity element imparting one conductivity type to the semiconductor layer by allowing the impurity element to pass through the taper portion and the insulating film, thereby forming an impurity region in which an impurity concentration is

increased toward an end portion of the taper portion; and selectively removing only a taper portion of the conductive layer to form a gate electrode.

[0045] In the constitution of the above-mentioned manufacturing method, doping is conducted by allowing an impurity element to pass through a taper portion made of a conductive layer to form an impurity region having a concentration gradient.

[0046] On the other hand, according to the conventional manufacturing method, doping of an impurity element is conducted using a resist mask formed by using a photomask, whereby an LDD region, a source region, and a drain region are formed.

[0047] In the above-mentioned constitution, an impurity element imparting one conductivity type to the semiconductor layer is added by being allowed to pass through the taper portion, and an impurity region in which an impurity concentration is increased toward an end portion of the taper portion has a concentration gradient at least in an impurity concentration (P concentration) of 1×10^{17} to $1\times10^{18}/cm^3$.

[0048] It is also possible that a driving circuit and a pixel portion are formed on the same substrate. In this case, it is preferable that only a taper portion is selectively removed at least in a gate electrode of a TFT of the pixel portion, and a taper portion of a gate electrode of a TFT (where an ON current is important) of the driving circuit is left as it is. Furthermore, in the TFT of the driving circuit, reliability becomes higher as the width of the taper portion in the channel length direction is larger. Therefore, for forming the taper portion, it is effective to conduct dry etching with etching gas containing SF_6 having a high selection ratio so that the width of the taper portion becomes longer.

[0049] Furthermore, it is also possible that not only a gate electrode having a layered structure but also a part of an insulating film (gate insulating film) covering a semiconductor layer are tapered, and an impurity region having a concentration gradient is formed by utilizing the insulating film. According to another constitution regarding a manufacturing method realizing the above-mentioned structure, there is provided a method of manufacturing a semiconductor device including the steps of: forming a semiconductor layer on an insulating surface; forming an insulating film on the semiconductor layer; forming a gate electrode on the insulating film; etching the insulating film to form an insulating layer having a taper portion on the semiconductor layer; and adding an impurity element imparting one conductivity type to the semiconductor layer by allowing the element to pass through the taper portion, thereby forming an impurity region in which an impurity concentration is increased toward an end portion of the taper portion.

[0050] In the above-mentioned constitution of the manufacturing method, doping is conducted by allowing an impurity element to pass through a taper portion made of an insulating layer, and an impurity region having a concentration gradient is formed.

BRIEF DESCRIPTION OF THE DRAWINGS

[0051] **FIGS. 1A and 1B** show a constitution of the present invention.

[0052] **FIGS. 2A** to **2**D illustrate manufacturing processes according to the present invention;

[0053] **FIGS. 3A** to **3**D illustrate manufacturing processes according to the present invention;

[0054] **FIG. 4** is a graph showing a carrier density distribution of simulation of the present invention;

[0055] **FIG. 5** is a graph showing TFT characteristics according to simulation of the present invention;

[0056] **FIGS. 6A** to **6**C illustrate manufacturing processes of an active matrix type liquid crystal display device of Embodiment 1;

[0057] **FIGS. 7A** to **7**C illustrate manufacturing processes of an active matrix type liquid crystal display of Embodiment 1;

[0058] **FIG. 8** illustrates manufacturing processes of an active matrix type liquid crystal display apparatus of Embodiment 1;

[0059] **FIG. 9** is a cross-sectional view of a liquid crystal module of Embodiment 2;

[0060] **FIG. 10** shows an outer appearance of a liquid crystal module of Embodiment 2;

[0061] **FIG. 11** shows a TEM photograph of a gate electrode of a TFT in a driving circuit of Embodiment 1;

[0062] **FIG. 12** shows a TEM photograph of a gate electrode of a TFT in a pixel portion of Embodiment 1;

[0063] **FIG. 13** shows voltage/current characteristics of a TFT in a pixel portion of Embodiment 1;

[0064] **FIG. 14** is a graph showing reliability data (10-year guarantee voltage) of a TFT in a driving circuit of Embodiment 1;

[0065] **FIG. 15** is a graph showing reliability data (on-stress) of a TFT in a driving circuit of Embodiment 1;

[0066] **FIG. 16** is a graph showing reliability data (off-stress) of a TFT in a driving circuit of Embodiment 1;

[0067] **FIGS. 17A and 17B** show reliability data (transient stress) of a TFT in a driving circuit of Embodiment 1;

[0068] **FIG. 18** shows a constitution of Embodiment 3;

[0069] **FIG. 19** shows voltage/current characteristics of a TFT in a pixel portion of Embodiment 3;

[0070] **FIG. 20** is a graph showing reliability data (10-year guarantee voltage) of a TFT in a pixel portion of Embodiment 3;

[0071] **FIG. 21** is a cross-sectional view of an active matrix substrate of Embodiment 4;

[0072] **FIG. 22** is a top view showing a pixel of Embodiment 4;

[0073] **FIG. 23** is a graph showing an impurity concentration distribution in a depth direction by second doping processing of Embodiment 1;

[0074] **FIG. 24** is a graph showing a ratio of an ON current to an OFF current of Embodiments 1 and 3;

[0075] **FIGS. 25A and 25B** are a top view and a cross-sectional view showing an EL module of Embodiment 5;

[0076] **FIGS. 26A** to **26**F show exemplary electronic apparatuses of Embodiment 6;

[0077] **FIGS. 27A** to **27**D show exemplary electronic apparatuses of Embodiment 6;

[0078] **FIGS. 28A** to **28**C show exemplary electronic apparatuses of Embodiment 6;

[0079] **FIG. 29** shows a conventional example;

[0080] **FIG. 30** is a graph showing voltage/current characteristics of a TFT in the conventional example;

[0081] **FIG. 31** is a graph showing a relationship between the reliability of a TFT in a driving circuit (20-hour guarantee voltage, and 10-year guarantee voltage) and the L_{OV} length of Embodiment 7; and

[0082] **FIG. 32** shows a relationship between the line width design size and the L_{OV} length of Embodiment 8.

DESCRIPTION OF THE PREFERRED EMBODIMENTS

Embodiment Mode

[0083] Hereinafter, the present invention will be described by way of illustrative embodiments with reference to **FIGS. 2A** to **2**D and **3**A to **3**D.

[0084] Herein, an impurity region is formed in which an impurity concentration (P concentration) is continuously increased from a channel forming region side to an impurity region side, by utilizing taper portions of a gate electrode.

[0085] First, an underlying insulating film **11** is formed on a substrate **10**. As the substrate **10**, a glass substrate, a quartz substrate, a silicon substrate, or a metal substrate or a stainless steel substrate with an insulating film formed thereon may be used. Furthermore, a plastic substrate having heat resistance enduring a treatment temperature may be used.

[0086] Furthermore, as the underlying insulating film **11**, an underlying film **11** made of an insulating film such as a silicon oxide film, a silicon nitride film, or a silicon oxide nitride film is formed. Herein, as the underlying film **11**, two-layered structure (**11***a*, **11***b*) is shown. However, a single layered structure or two or more layered structure of the insulating film may be used. The underlying insulating film **11** may not be formed.

[0087] Then, a semiconductor layer **12** is formed on the underlying film **11**. The semiconductor layer **12** is provided by forming a semiconductor film having an amorphous structure by a known method (sputtering, LPCVD, plasma CVD, or the like), subjecting the semiconductor film to a known crystallization processing (laser crystallization, thermal crystallization, thermal crystallization using a catalyst such as nickel, or the like) to obtain a crystalline semiconductor film, and patterning the crystalline semiconductor film into a desired shape using a first photomask. The semiconductor layer **12** is formed to a thickness of 25 to 80 nm (preferably, 30 to 60 nm). There is no particular limit regarding the material for the crystalline semiconductor film. However, preferably the crystalline semiconductor film may be formed of a silicon or silicon germanium (SiGe) alloy.

[0088] Then, an insulating film **13** is formed so as to cover the semiconductor layer **12**.

[0089] The insulating film **13** is formed to a thickness of 40 to 150 nm so as to have a single layered structure or a multi-layered structure of an insulating film containing silicon by plasma CVD or sputtering. The insulating film **13** is to be a gate insulating film.

[0090] Then, a first conductive film **14** having a thickness of 20 to 100 nm and a second conductive film **15** having a thickness of 100 to 400 nm are laminated on the insulating film **13** (**FIG. 2A**). The first conductive film **14** made of a TaN film and the second conductive film **15** made of a W film are stacked by sputtering. Herein, the first conductive film **14** is made of TaN, and the second conductive film **15** is made of W. However, the present invention is not limited thereto. The first and second conductive films **14** and **15** may be formed of an element selected from Ta, W, Ti, Mo, Al, and Cu, or formed of an alloy material or a compound material containing these elements as main components thereof. A semiconductor film such as a polycrystalline silicon film doped with impurity elements such as phosphorus may be used.

[0091] Then, a resist mask **16***a* is formed by using a second photomask, and first etching is conducted using an ICP etching apparatus. During the first etching process, the second conductive film **15** is etched, whereby a second conductive layer **17***a* having tapered configurations (taper portions) at end portions is obtained as shown in **FIG. 2B**.

[0092] An angle of the taper portions (taper angle) is defined as an angle formed by a substrate surface (horizontal surface) and slope portions of the tapered portions. A taper angle of the second conductive layer **17***a* can be set so as to fall within a range of 5° to 45° by appropriately selecting etching conditions.

[0093] Then, the resist mask **16***a* is used as it is, whereby second etching is conducted by using an ICP etching apparatus. During the second etching process, the first conductive film **14** is etched to form a first conductive layer **18***a* as shown in **FIG. 2C**. The first conductive layer **18***a* has a first width (W1). During the second etching process, the resist mask, the second conductive layer, and the insulating film are slightly etched to form a resist mask **16***b*, a second conductive layer **17***b*, and an insulating film **19**.

[0094] Herein, in order to suppress a decrease in the thickness of the insulating film **13**, etching is conducted twice (first etching process and second etching process). However, there is no particular limit thereto as long as an electrode structure (a layered structure of the second conductive layer **17***b* and the first conductive layer **18***a*) as shown in **FIG. 3C** can be obtained, and etching may be conducted once.

[0095] Then, first doping is conducted while the resist mask **16***b* is kept as it is. During the first doping process, through-doping is conducted via the insulating film **19**, whereby high-concentration impurity regions **20** and **21** are formed (**FIG. 2D**).

[0096] Then, third etching is conducted with the resist mask **16***b* by using an ICP etching apparatus. During the third etching process, the second conductive layer **17***b* is etched to form a second conductive layer **17***c* as shown in **FIG. 3A**. The second conductive layer **17***c* has a second width (W2). During the third etching process, the first conductive layer is also slightly etched, and a first conduc-

tive layer **18***b* with a smaller width is formed. Note, as shown in **FIG. 32**, according to the width of wiring (here, the width **W1** of the first conductive layer), the length of the taper portion of the first conductive layer varies. Therefore, when a plurality of wirings with different widths are formed, the widths of the first conductive layer **18***b* are differently formed.

[**0097**] After the resist mask **16***b* is removed, second doping is conducted. During the second doping process, through-doping is conducted via the taper portions of the first conductive layer **18***b* and the insulating film **19**, whereby low-concentration impurity regions **24** and **25** are formed (**FIG. 3B**). During the doping process in **FIG. 3**B, by allowing impurity elements to pass through the taper portions, the low-concentration impurity regions **24** and **25** are formed in which an impurity concentration (P concentration) is continuously increased from a channel forming region side to the high-concentration impurity region side. During the second doping process, the high-concentration impurity regions are also doped, whereby high-concentration impurity regions **22** and **23** are formed. Herein, the high-concentration impurity regions and the low-concentration impurity regions are shown separately in the figure. However, actually, there is no clear border (boundary) therebetween, and regions having a concentration gradient as shown in **FIG. 1A** is formed. Similarly, there is no clear border between the channel forming region and the low-concentration impurity regions. As shown in **FIG. 32**, depending on the width of wiring to be designed, the length of the taper portion of the first conductive layer changes. Accordingly, in a case that a plurality of wirings with different widths are formed, the widths of the doped regions (the regions having the concentration gradient) also change.

[**0098**] Note, here is shown an example that the first and second etching process, and then, the first doping are performed. After that, the third etching and the second doping are carried out. However, if the electrode structure (a lamination of the second and first conductive layers) and the region having concentration gradient as shown in **FIG. 3B** can be formed, the process order is not limited. For example, it is possible that the electrode structure as shown in **FIG. 3B** is obtained through the first, second and third etching, and then the first and second doping are subsequently carried out.

[**0099**] Then, fourth etching is conducted using an ICP etching apparatus. During the fourth etching process, only the taper portions of the first conductive layer **18***b* are removed. The first conductive layer **18***b* having the first width (**W1**) becomes a first conductive layer **18***c* having a second width (**W2**). According to the present invention, the first conductive layer **18***c* and the second conductive layer **17***c* layered thereon become a gate electrode.

[**0100**] Thereafter, the impurity elements added to the semiconductor layer are activated. Due to the activation, the impurity elements contained in the impurity region are diffused, whereby a concentration gradient with a smoother curve is formed, and borders between the respective regions are eliminated. Then, an interlayer insulating film **27** is formed, and thereafter, contact holes are formed by using a third mask. Electrodes **28** and **29** are formed by using a fourth mask.

[**0101**] Thus, a TFT with a structure shown in **FIG. 3D** can be formed by using four photomasks.

[**0102**] The TFT formed according to the present invention is characterized in that the low-concentration impurity region **25** provided between the channel forming region **26** and the drain region **23** has a concentration gradient in which an impurity concentration is continuously increased as a distance from a channel forming region is increased, and the low-concentration impurity region **25** is not overlapped with the gate electrode.

[**0103**] Simulation was conducted in order to check the effect of the impurity region having a concentration gradient. Herein, assuming that there are a high-concentration impurity region that is a source/drain region, a low-concentration impurity region, and a channel forming region as shown in **FIG. 4**, simulation was conducted in the case where only the low-concentration impurity region has a concentration gradient. Each numerical value used for simulation was L=6 μm, W=4 μm, width of the low-concentration impurity region (Loff)=1.5 μm, thickness of a gate insulating film=115 nm, thickness of a polysilicon layer=45 nm, carrier density (B concentration) of the channel forming region=$2\times10^{16}/cm^3$, and carrier density (P concentration) of the source region/drain region (P concentration)=$1\times10^{19}/cm^3$. Furthermore, the low-concentration impurity region with a concentration gradient was compared with the low-concentration impurity region with a constant concentration (a comparative example). Herein, simulation was conducted by using a gradient of a normal distribution (Gaussian distribution) as shown in **FIG. 4** as a concentration distribution model of the low-concentration impurity region, whereby voltage/current characteristics of TFTs (**FIG. 5**) were obtained. As a comparative example, a carrier concentration (P concentration) was kept constant ($3\times10^{17/cm3}$, $5\times10^{17}/cm^3$) in the low-concentration impurity region, and voltage/current characteristics of TFTs were also obtained.

[**0104**] **FIG. 5** shows voltage/current characteristics at Vds (voltage difference between the source region and the drain region)=14 V. As shown in **FIG. 5**, an OFF current value of the TFT having the low-concentration region with a concentration gradient was remarkably decreased, compared with the comparative examples. This is considered to be caused mainly by alleviated concentration of an electric field formed on a border of each region according to the present invention. An ON current value is determined by mobility and a sheet resistance. **FIG. 5** also shows that an ON current value of the TFT having the low-concentration impurity region with a concentration gradient is the same level as that of the comparative examples. More specifically, in the case where a sheet resistance is measured in the low-concentration impurity region, even if the sheet resistance of the present invention is the same as that of the comparative example (ON current value is also the same), only an OFF current value can be reduced according to the present invention. Therefore, a ratio of an ON current value to an OFF current value is increased. In the prior art, an ON current value is also decreased when an OFF current value is designed to be decreased, so that a ratio of an ON current value to an OFF current value is hardly changed or decreased.

[**0105**] Herein, a gradient of a normal distribution (Gaussian distribution) was used. However, the present invention is not particularly limited thereto as long as a concentration gradient is provided. A concentration distribution may be an exponential distribution, and may form a straight line having

a tilt. In any case, results obtained by simulation were substantially the same, and an OFF current was reduced when the impurity region has a continuous concentration gradient.

[0106] Furthermore, according to the present invention, the impurity region may have a concentration gradient as shown in **FIG. 1**. The present invention is not limited to a top gate type TFT structure shown in **FIG. 1**, and is applicable to, for example, a bottom gate type (inverted stagger type) TFT or a forward stagger type TFT.

[0107] Hereinafter, the present invention having the above-mentioned constitution will be described in more detail by way of illustrative embodiments.

Embodiment 1

[0108] In this embodiment, a method of simultaneously manufacturing a pixel portion and TFTs (n-channel TFT and p-channel TFT) of a driving circuit provided on the periphery of the pixel portion on the same substrate will be described with reference to **FIGS. 6A** to **6**C, **7**A-**7**C and **8**.

[0109] In this embodiment, a substrate **200** is used, which is made of barium borosilicate glass such as #7059 glass and #1737 glass produced by Corning Corp. or aluminoborosilicate glass. As the substrate **200**, any substrate can be used as long as it has transparency. A quartz substrate may be used. A plastic substrate having heat resistance enduring a treatment temperature of this embodiment also may be used.

[0110] Then, an underlying film **201** composed of an insulating film such as a silicon oxide film, a silicon nitride film, or a silicon oxide nitride film is formed on the substrate **200**. In this embodiment, a two-layered structure is used as the underlying film **201**. However, a single insulating film or a lamination of two or more insulating films using the above insulating film may also be used. As a first layer of the underlying film **201**, a silicon oxide nitride film **201**a is formed to a thickness of 10 to 200 nm (preferably, 50 to 100 nm) by plasma CVD, using SiH_4, NH_3, and N_2O as reactive gas. In this embodiment, a silicon oxide nitride film **201***a* (composition ratio: Si=32%, O=27%, N=24%, and H=17%) having a thickness of 50 nm is formed. Then, as a second layer of underlying film **201**, a silicon oxide nitride film **201***b* is formed to a thickness of 50 to 200 nm (preferably, 100 to 150 nm) by plasma CVD, using SiH_4 and N_2O as reactive gas. In this embodiment, a silicon oxide nitride film (composition ratio: Si=32%, O=59%, N=7%, and H=2%) having a thickness of 100 nm is formed.

[0111] Then, semiconductor layers **202** to **206** are formed on the underlying film **201**. The semiconductor layers **202** to **206** are formed by forming a semiconductor film having an amorphous structure by a known method (sputtering, LPCVD, plasma CVD, or the like), conducting a known crystallization precessing (laser crystallization, thermal crystallization, or thermal crystallization using a catalyst such as nickel) to obtain a crystalline semiconductor film, and patterning the film into a desired shape. The semiconductor layers **202** to **206** are formed to a thickness of 25 to 80 nm (preferably, 30 to 60 nm). There is no particular limit regarding the material for the crystalline semiconductor film. However, it is preferable to form the crystalline semiconductor film of silicon or a silicon germanium (Si_xGe_{1-x}X=0.0001 to 0.02) alloy. In this embodiment, an amorphous silicon film of 55 nm is formed by plasma CVD, and thereafter, a solution containing nickel is held on the amorphous silicon film. The amorphous silicon film is dehydrogenated (at 500° C., for one hour), and then subjected to thermal crystallization (at 550° C., for 4 hours). Furthermore, laser annealing is conducted for the purpose of improving crystallization, whereby a crystalline silicon film is formed. The crystalline silicon film is subjected to patterning by photolithography to form the semiconductor layers **202** to **206**.

[0112] Furthermore, after the semiconductor layers **202** to **206** are formed, doping of a trace amount of impurity elements (boron or phosphorus) may be appropriately conducted so as to control a threshold value of TFTs.

[0113] Furthermore, in the case of manufacturing a crystalline semiconductor film by laser crystallization, a pulse-oscillation type or continuous light emission type excimer laser, a YAG laser, a YVO_4 laser, a YLF laser, a $YAlO_3$ laser, a glass laser, a ruby laser, an alexandrite laser or a Ti:sapphire laser can be used. When using these lasers, laser light emitted from a laser oscillator may be condensed into a line shape by an optical system and allowed to radiate to a semiconductor film. Crystallization conditions are appropriately selected by the operator. However, when using a pulse oscillation excimer laser, a pulse oscillation frequency is set to be 30 Hz, and a laser energy density is set to be 100 to 400 mJ/cm^2 (typically 200 to 300 mJ/cm^2). In the case of using a pulse oscillation YAG laser or a YVO_4 laser, the second or third harmonic thereof may be used, a pulse oscillation frequency may be set to be 1 to 10 kHz, and a laser energy density may be set to be 300 to 600 mJ/cm^2 (typically, 350 to 500 mJ/cm^2). Laser light condensed in a line shape with a width of 100 to 1000 μm (e.g., 400 μm) may be radiated over the entire surface of a substrate, and a line-shaped laser light overlap ratio at this time may be set to be 80 to 98%.

[0114] Further, when a continuous oscillation (continuous wave) laser such as the YVO_4 laser, a laser light emitted from the continuous oscillation YVO_4 laser with an output of **10**W is converted to a harmonic (the second through fourth harmonic) by a non-linear optical element. Otherwise, there is a way to emit the harmonic in which a YVO_4 crystal and the non-linear optical element are located in a oscillator. It is preferable to shape a rectangular or elliptical laser light at an irradiation surface by an optical system. Then, the laser light is irradiated to an object to be processed. In this time, an energy density 0.01-100 MW/cm^2 (preferably, 0.1-10 MW/cm^2) is needed. The semiconductor film is moved at a speed of 0.5-2000 cm/s relative to the laser light.

[0115] Then, a gate insulating film **207** is formed so as to cover the semiconductor layers **202** to **206**. The gate insulating film **207** is formed of an insulating film containing silicon so as to have a thickness of 40 to 150 nm by plasma CVD or sputtering. In this embodiment, a silicon oxide nitride film (composition ratio: Si=32%, O=59%, N=7%, and H=2%) is formed to a thickness of 115 nm by plasma CVD. Needless to say, the gate insulating film is not limited to a silicon oxide nitride film, and may have a single layer or multi-layered structure of insulating films containing silicon.

[0116] Then, as shown in **FIG. 6A, a** first conductive film **208** (thickness: 20 to 100 nm) and a second conductive film **209** (thickness: 100 to 400 nm) are laminated on the gate

insulating film **207**. In this embodiment, the first conductive film **208** made of a TaN film having a thickness of 30 nm and the second conductive film **209** made of a W film having a thickness of 370 nm are laminated thereon. The TaN film is formed by sputtering using Ta as a target in an atmosphere containing nitrogen. The W film is formed by sputtering using W as a target. The W film can also be formed by thermal CVD using tungsten hexafluoride (WF_6). In any case, it is required to lower a resistance in order to use the W film as a gate electrode, and it is desirable that a resistance ratio of the W film is 20 $\mu\Omega$cm or less. The resistance ratio of the W film can be lowered by enlarging crystal grains thereof. However, in the case where there are a number of impurity elements such as oxygen in the W film, crystallization is inhibited, and the resistance of the W film is increased. Therefore, in this embodiment, the W film is formed by sputtering using high-purity W (purity: 99.9999%) as a target so that no impurity may be allowed to enter in the W film from a vapor phase during the film formation, whereby a resistance ratio of 9 to 20 $\mu\Omega$cm can be achieved.

[**0117**] In this embodiment, the first conductive film **208** is made of TaN, and the second conductive film **209** is made of W. However, the present invention is not limited thereto. Both the films may be formed of an element selected from Ta, W, Ti, Mo, Al, Cu, Cr, and Nd, or an alloy material containing the element as its main component or a compound material. A semiconductor film such as a polycrystalline silicon film doped with an impurity element such as phosphorus may also be used. Furthermore, an AgPdCu alloy may be used. Furthermore, the following combination may be used: the first conductive film made of a tantalum (Ta) film and the second conductive film made of a W film; the first conductive film made of a titanium nitride (TiN) film and the second conductive film made of a W film; the first conductive film made of a tantalum nitride (TaN) film and the second conductive film made of an Al film; the first conductive film made of tantalum nitride (TaN) film and the second conductive film made of a Cu film.

[**0118**] Then, masks **210** to **215** made of a resist are formed by photolithography, and first etching processing for forming electrodes and wiring is conducted. The first etching processing is conducted as first and second etching conditions. In this embodiment, under the first etching condition, etching is conducted by an inductively coupled plasma (ICP) etching method, in which plasma is generated by using CF_4, Cl_2, and O_2, as etching gas (flow rate: 25/25/10 (sccm)) with an RF power (13.56 MHz) of 500 W supplied to a coil-shaped electrode at a pressure of 1 Pa. As the etching gas, chlorine type gas such as Cl_2, BCl_3, $SiCl_4$, and CCl_4 or fluorine gas such as CF_4, SF_6, and NF_3, or O_2 can be appropriately used. Herein, a dry etching apparatus (Model E645-ICP) using ICP produced by Matsushita electric Industrial Co., Ltd. is used. An RF power (13.56 MHz) of 150 W is also applied to the substrate side (sample stage), whereby a substantially negative self-bias voltage is applied thereto. An area of an electrode on the substrate side is 12.5 cm×12.5 cm, and a coil-shaped electrode (herein, a quartz disk provided with a coil) has a diameter of 25 cm. Under the first etching condition, the W film is etched and end portions of the first conductive layer are tapered. Under the first etching condition, an etching rate with respect to W is 200.39 nm/min., an etching rate with respect to TaN is 80.32 nm/min., and a selection ratio of W with respect to TaN is about 2.5. Furthermore, under the first etching condition, a taper angle of W becomes about 26°. The etching under the first etching condition corresponds to the first etching process (**FIG. 2B**) described in the embodiment mode.

[**0119**] Thereafter, without removing the masks **210** to **215** made of a resist, etching is conducted for about 30 seconds under the second etching condition, in which plasma is generated by using CF_4 and Cl_2 as etching gas (flow rate ratio: 30/30 (sccm)) with an RF power (13.56 MHz) of 500 W supplied to a coil-shaped electrode at a pressure of 1 Pa. An RF power (13.56 MHz) of 20 W is also applied to the substrate side (sample stage), whereby a substantially negative self-bias voltage is applied thereto. Under the second etching condition using a mixture of CF_4 and Cl_2 as etching gas, the W film and the TaN film are etched to the same degree. Under the second etching condition, an etching rate with respect to W is 58.97 nm/min., and an etching rate with respect to TaN is 66.43 nm/min. In order to conduct etching without leaving any residual on the gate insulating film, an etching time may be increased by about 10 to 20%. The etching under the second etching condition corresponds to the second etching process (**FIG. 2C**) described in the embodiment.

[**0120**] According to the first etching processing, by appropriately prescribing the shape of a resist mask, the end portions of the first conductive layer and the second conductive layer are tapered due to the effect of a bias voltage applied to the substrate side. The angle of the taper portion may be 15° to 45°.

[**0121**] Furthermore, the angle of the taper portion (taper angle) may be appropriately determined by the operator with reference to Table 1.

TABLE 1

Etching rate (E.R.) of W and TaN and taper angle of W

Condition	ICP [W]	Bias [W]	Voltage [Pa]	CF_4	Cl_2	O_2 [sccm]	W E.R. (1) [nm/min]	TaN E.R. (2) [nm/min]	W/TaN selection ratio (1) ÷ (2)	Taper angle of W [deg]
1	500	20	1.0	30	30	0	58.97	66.43	0.889	80
2	500	60	1.0	30	30	0	88.71	118.46	0.750	25
3	500	60	1.0	30	30	0	111.66	168.03	0.667	18
4	500	20	1.0	25	25	10	124.62	20.67	6.049	70
5	500	60	1.0	25	25	10	161.72	35.81	4.528	35
6	500	100	1.0	25	25	10	176.90	56.32	3.008	32
7	500	150	1.0	25	25	10	200.39	80.32	2.495	26
8	500	200	1.0	25	25	10	218.20	102.87	2.124	22

TABLE 1-continued

Etching rate (E.R.) of W and TaN and taper angle of W

Condition	ICP [W]	Bias [W]	Voltage [Pa]	CF_4	Cl_2	O_2 [sccm]	W E.R. (1) [nm/min]	TaN E.R. (2) [nm/min]	W/TaN selection ratio (1) ÷ (2)	Taper angle of W [deg]
9	500	250	1.0	25	25	10	232.12	124.97	1.860	19
10	500	20	1.0	20	20	20	- (*)	14.83	-	-
11	500	60	1.0	20	20	20	193.02	14.23	13.695	37
12	500	100	1.0	20	20	20	235.27	21.81	10.856	29
13	500	150	1.0	20	20	20	276.74	38.61	7.219	26
14	500	200	1.0	20	20	20	290.10	45.30	6.422	24
15	500	250	1.0	20	20	20	304.34	50.25	6.091	22

(*) "-" represents impossibility of measurement due to a change of a W surface during etching

[0122] Thus, conductive layers **216** to **221** of a first shape composed of first conductive layers **216***a* to **221***a* and second conductive layers **216***b* to **221***b* are formed by the first etching processing. The width of the first conductive layer in the channel length direction corresponds to **W1** shown in the above embodiment mode. Although not shown, regions of the insulating film **207** to be a gate insulating film, not covered with the conductive layers **216** to **221** of a first shape, are etched by about 10 to 20 nm to be thin.

[0123] Without removing the resist masks, first doping processing is conducted, whereby an impurity element providing an n-type is added to the semiconductor layers **(FIG. 6B)**. The doping processing may be conducted by ion doping or ion implantation. Ion doping is conducted under the conditions of a dose amount of 1×10^{13} to $5\times10^{15}/cm^2$ and an acceleration voltage of 60 to 100 keV. In this embodiment, doping is conducted at a dose amount of $1.5\times10^{15}/cm^2$ and an acceleration voltage of 80 keV. As the impurity element providing an n-type, an element belonging to Group XV, typically, phosphorus (P) or arsenic (As) is used. Herein, phosphorus (P) is used. In this case, the conductive layers **216** to **221** function as masks with respect to the impurity element providing an n-type, whereby high-concentration impurity regions **222** to **233** are formed in a self-alignment manner. An impurity element imparting an n-type is added to the high-concentration impurity regions **222** to **223** in a concentration of 1×10^{20} to $1\times10^{21}/cm^3$. The first doping processing corresponds to the first doping process **(FIG. 2D)** described in the embodiment mode.

[0124] Then, without removing the resist masks, second etching processing is conducted. Herein, etching is conducted for 25 seconds by using SF_6, Cl_2, and O_2 as etching gas (flow rate ratio: 24/12/24 (sccm)) with an RF power (13.56 MHz) of 700 W supplied to a coil-shaped electrode at a pressure of 1.3 Pa to thereby generate plasma. An RF power (13.56 MHz) of 10 W is also applied to the substrate side (sample stage), whereby a substantially negative self-bias voltage is applied thereto. In the second etching processing, an etching rate with respect to W is 227.3 nm/min., an etching rate with respect to TaN is 32.1 nm/min., and a selection ratio of W with respect to TaN is 7.1. An etching rate with respect to SiON that is the insulating film **207** is 33.7 nm/min., and a selection ratio of W with respect to TaN is 6.83. In the case of using SF_6 as the etching gas, a selection ratio with respect to the insulating film **207** is high, so that a decrease in a film thickness can be suppressed. Furthermore, in a TFT of a driving circuit, reliability becomes higher as the width of the taper portion in the channel length direction is longer. Therefore, when the taper portion is formed, it is effective to conduct dry etching with etching gas containing SF_6.

[0125] The taper angle of W becomes 70° in the second etching processing. Furthermore, in the second etching processing, second conductive layers **234***b* to **239***b* are formed. On the other hand, the first conductive layers are hardly etched to form first conductive layers **234***a* to **239***a*. Although not shown, actually, the width of the first conductive layers is narrowed by about 0.15 μm (i.e., about 0.3 μm over the total line width) compared with the state before the second etching processing. The second etching processing corresponds to the third etching process **(FIG. 3A)** described in the embodiment. Furthermore, the width of the second conductive layer in the channel length direction corresponds to **W2** shown in the embodiment mode.

[0126] It is also possible to use CF_4, Cl_2, and O_2 as the etching gas in the second etching processing. In this case, etching may be conducted by generating plasma under a flowrate ratio of 25/25/10 (sccm) with an RF power (13.56 MHz) of 500 W supplied to a coil-shaped electrode at a pressure of 1 Pa. An RF power (13.56 MHz) of 20 W is also applied to the substrate side (sample stage), whereby a substantially negative self bias voltage is applied thereto. In the case of using CF_4, Cl_2, and O_2, an etching rate with respect to W is 124.62 nm/min., an etching rate with respect to TaN is 20.67 nm/min., and a selection ratio of W with respect to TaN is 6.05. Thus, the W film is selectively etched. Furthermore, in this case, the regions of the insulating film **207**, not covered with the conductive layers **234** to **239** of a first shape, are etched by about 50 nm to be thin.

[0127] Then, after removing the resist masks, second doping processing is conducted to obtain a state shown in **FIG. 6C**. In addition, although the widths of the taper portions of the first conductive layer are shown as identical in **FIG. 6**C, the lengths of the taper portions of the first conductive layers vary according to the widths of wiring as shown in **FIG. 32**. Therefore, in a case that a plurality of wirings with different widths are formed over one substrate, the widths of the doped regions also change. Doping is conducted using the second conductive layers **234***b* to **239***b* as masks with respect to an impurity element so that the impurity element is added to the semiconductor layers below the taper portions of the first conductive layers. In this embodiment, phosphorus (P) is used as the impurity element, and plasma doping is conducted under the doping conditions of a dose amount of $1.5\times10^{14}/cm^2$, an accelera-

tion voltage of 90 keV, an ion current density of 0.5 $\mu A/cm^2$, phosphine (PH_3) 5% hydrogen dilute gas, and a flow rate of 30 sccm. Thus, low-concentration impurity regions **241** to **254** are formed so as to be overlapped with the first conductive layers in a self-alignment manner. The concentration of phosphorus (P) added to the low-concentration impurity regions **241** to **254** is 1×10^{17} to $1\times10^{19}/cm^2$, and the low-concentration impurity regions **241** to **254** have a concentration gradient in accordance with the thickness of the taper portions of the first conductive layers. In the semiconductor layer overlapped with the taper portion of the first conductive layer, an impurity concentration (P concentration) decreases gradually from the end of the taper portion of the first conductive layer inwardly. More specifically, in the second doping processing, a concentration distribution in **FIG. 1A** described in embodiment mode is formed. Furthermore, an impurity element is also added to the high-concentration impurity regions **222** to **233** to form high-concentration impurity regions **255** to **266**. The second doping processing corresponds to the second doping process (**FIG. 3B**) described in the embodiment.

[**0128**] **FIG. 23** shows a concentration distribution (SIMS analysis) of phosphorus in a depth direction when the second doping processing (acceleration voltage of 90 kV, and dose amount of $1.5\times10^{14}/cm^2$) is conducted. It is understood from **FIG. 23** that, in the depth direction, the concentration of an impurity added to the semiconductor layers (Si) in the second doping processing decreases from the surface toward the substrate side. In **FIG. 23**, "x" represents a concentration distribution (depth direction) of Sample A obtained by forming a silicon oxide nitride film to a thickness of 110 nm on a silicon substrate, followed by a second doping. The concentration distribution of Sample A corresponds to a concentration distribution of the regions not covered with the first conductive layers in **FIG. 6C**.

[**0129**] In **FIG. 23**, "□" represents a concentration distribution (depth direction) of Sample B obtained by forming a TaN film to a thickness of 15 nm on the gate insulating film (silicon oxide nitride film), followed by the second doping. The concentration distribution of Sample B corresponds to a concentration distribution of regions of the first conductive layers where the thickness of the taper portions is 15 nm. A value of a depth in the horizontal axis does not include a thickness of a TaN film.

[**0130**] In **FIG. 23**, "○" represents a concentration distribution (depth direction) of Sample C obtained by forming a TaN film to a thickness of 30 nm on a silicon oxide nitride film, followed by the second doping. The concentration distribution of Sample C corresponds to a concentration distribution of regions of the first conductive layers where the thickness of the taper portions is 30 nm in **FIG. 6C**. A value of a depth in the horizontal axis does not include a thickness of a TaN film.

[**0131**] It is understood from **FIG. 23** that, in the vicinity of the surfaces of the semiconductor layers (in the vicinity of the interfaces between the semiconductor layers and the gate insulating film) positioned below the taper portions, the concentration of phosphorus continuously increases in a range of 1×10^{18} to $7\times10^{18}/cm^3$ as the thickness of the taper portion decreases from 30 nm to 0 nm (i.e., with distance from the channel forming region in the channel length direction).

[**0132**] It is also understood from **FIG. 23** that, at a position of 40 nm from the surface of the semiconductor layer positioned below the taper portion, a phosphorus concentration is continuously increased in a range of 1.5×10^{17} to $3.5\times10^{18}/cm^3$ as the thickness of the taper portion decreases from 30 nm to 0 nm (i.e., with distance from the channel forming region in the channel length direction). It should be noted that the phosphorus concentration by SIMS analysis is measured immediately after doping. Phosphorus is dispersed later by heat treatment or the like, so that the phosphorus concentration by SIMS analysis is slightly different from that at the completion of a TFT.

[**0133**] In this embodiment, the width (in the channel length direction) of the taper portion is preferably at least 0.5 μm or more up to a range of 1.5 μm to 2 μm. Therefore, although influenced by a thickness, the width in the channel length direction of the low-concentration impurity region having a concentration gradient is not beyond a range of 1.5 μm to 2 μm, either. Herein, although the high-concentration impurity regions and the low-concentration impurity regions are shown separately. Actually, there is no clear border therebetween. As shown in **FIG. 1A**, regions having a concentration gradient are formed. Similarly, there is no clear border between the channel forming regions and the low-concentration impurity regions.

[**0134**] Next, the semiconductor layers to be active layers of n-channel TFTs are covered with resist masks **267** to **269**. Under this condition, third doping processing is conducted. In the third doping processing, p-type impurity regions **270** to **273** (high-concentration impurity regions **270***a* to **273***a* and low-concentration impurity regions **270***b* to **273***b*) are formed in which an impurity element providing conductivity (p-type) opposite to the above-mentioned conductivity (n-type) is added to the semiconductor layers to be active layers of p-channel TFTs. Since the semiconductor layers are doped with the impurity element by allowing the impurity element to pass through the taper portions, the p-type low-concentration impurity regions **270***b* to **273***b* have a concentration gradient similar to that of the n-type low-concentration impurity regions **241** to **254** (**FIG. 7A**). Using the first conductive layers **234***a* and **236***b* as masks with respect to an impurity element, an impurity element providing a p-type is added to form p-type impurity regions. In this embodiment, the p-type impurity regions **270** to **273** are formed by ion doping using diborane (B_2H_6). In the first and second doping processing, phosphorus is added to the impurity regions **270***a* to **273***a* in different concentrations. However, by conducting doping processing so that the concentration of boron becomes 2×10^{20} to $2\times10^{21}/cm^3$ in either region, whereby they function as a source region and a drain region of a p-channel TFT. Thus, there is not problem. Furthermore, in the case of using the condition of preventing a decrease in film thickness in the second etching processing (for example, in the case of using SF_6 as etching gas), in order to facilitate doping of boron, etching (reactive ion etching (RIE) using CHF_3 gas) for thinning the insulating film **207** may be conducted before the third doping processing.

[**0135**] Then, a resist mask **274** is formed, and third etching processing is conducted. In the third etching processing, taper portions of the first conductive layers are selectively etched to eliminate regions overlapped with the semiconductor layers. The third etching processing is con-

ducted by using an ICP etching apparatus, using, as etching gas, Cl_2 having a high selection ratio with respect to W. In this embodiment, etching is conducted for 30 seconds by generating plasma, using Cl_2 with a flow rate ratio of 80 (sccm), with an RF power (13.56 MHz) of 350 W supplied to a coil-shaped electrode at a pressure of 1.2 Pa. An RF power (13.56 MHz) of 50 W is also supplied to the substrate side (sample stage), whereby a substantially negative self-bias voltage is applied thereto. In the third etching, first conductive layers **237***c* to **239***c* are formed **(FIG. 7B)**. The third etching processing corresponds to the fourth etching process **(FIG. 3C)** described in the embodiment. Furthermore, the width of the first conductive layer in the channel length direction corresponds to **W2** shown in the embodiment.

[0136] In the third etching processing, low-concentration impurity regions (LDD regions) **247** to **254** having a concentration gradient are formed so as not to be overlapped with the first conductive layers **237***c* to **239***c*. The low-concentration impurity regions (GOLD regions) **241** to **246** remain overlapped with the first conductive layers **234***a* to **236***a*. Thus, the structure of a TFT is made different in accordance with each circuit.

[0137] Furthermore, an electrode constituted by the first conductive layer **237***c* and the second conductive layer **237***b* functions as a gate electrode of an n-channel TFT of a sampling circuit to be formed in the later process. Similarly, an electrode constituted by the first conductive layer **238***c* and the second conductive layer **238***b* functions as a gate electrode of an n-channel TFT in a pixel portion to be formed in the later process. An electrode constituted by the first conductive layer **239***c* and the second conductive layer **239***b* functions as one electrode of a storage capacitor in a pixel portion to be formed in the later process.

[0138] In this embodiment, the third etching processing is conducted after the third doping processing. However, the third doping processing may be conducted after the third etching processing.

[0139] Then, the resist mask **274** is removed and a first interlayer insulating film **275** is formed. The first interlayer insulating film **275** is formed to a thickness of 10 to 200 nm by plasma CVD or sputtering, using an insulating film containing silicon. The first interlayer insulating film functions as an etching stopper so that the semiconductor layers are not overetched during formation of contact holes in the insulating film that is decreased in thickness. In this embodiment, a silicon oxide film having a thickness of 50 nm is formed by plasma CVD. Needless to say, the first interlayer insulating film **275** is not limited to a silicon oxide film. A single layer or multi-layered structure of insulating films containing silicon may be used.

[0140] Then, as shown in **FIG. 7**C, an impurity element added to each semiconductor layer is activated. The activation is conducted by thermal annealing using an annealing furnace. Thermal annealing may be conducted at 400° C. to 700° C., typically 500° C. to 550° C. in a nitrogen atmosphere having an oxygen concentration of 1 ppm or less, preferably 0.1 ppm or less. In this embodiment, activation is conducted by heat treatment at 550° C. for four hours. Instead of thermal annealing, laser annealing or rapid thermal annealing (RTA) can be applied.

[0141] Although not shown in the figure, the impurity element is dispersed due to the activation, whereby a border between the low-concentration impurity region and the high-concentration impurity region is eliminated to obtain the concentration distribution shown in **FIG. 1A**. Thus, the low-concentration impurity region has a concentration gradient, and a part of the high-concentration impurity region on the side of the low-concentration impurity region also has a concentration gradient.

[0142] In this embodiment, at the same time as the above-mentioned activation, nickel used as a catalyst during crystallization is gettered in the impurity region containing phosphorus of high concentration, whereby a nickel concentration in the semiconductor layer mainly to be a channel forming region is reduced. In a TFT having a channel forming region thus produced, an OFF current value is decreased and crystallinity is satisfactory. Therefore, a high electric field effect mobility is obtained, and satisfactory characteristics can be achieved.

[0143] The activation may be conducted before forming the first interlayer insulating film. In the case where a wiring material to be used is weak to heat, it is preferable to conduct the activation after forming an interlayer insulating film (insulating film mainly containing silicon, e.g., silicon nitride film) for protecting the wiring and the like as in this embodiment.

[0144] Then, a second interlayer insulating film **276** made of a silicon nitride film is formed, followed by heat treatment (at 300° C. to 550° C., for 1 to 12 hours), whereby the semiconductor layers are hydrogenated. In this embodiment, heat treatment is conducted at 410° C. for one hour in a nitrogen atmosphere. This process is conducted for terminating a dangling bond of the semiconductor layers by hydrogen contained in the second interlayer insulating film **276**. Irrespective of the presence of the first interlayer insulating film, the semiconductor layers can be hydrogenated. Plasma hydrogenation (using hydrogen excited by plasma) may be conducted.

[0145] In the case of using laser annealing as the activation, it is desirable that laser light such as excimer laser and YAG laser is radiated after the above hydrogenation.

[0146] Then, a third interlayer insulating film **277** made of an organic insulating material is formed on the second interlayer insulating film **276**. In this embodiment, an acrylic resin film having a thickness of 1.6 μm is formed. Then, patterning is conducted so as to form contact holes reaching each impurity region (**257**, **258**, **261** to **263**, **265**, **270***a*, **271***a*, **272***a*, and **273***a*). In this embodiment, a plurality of etching processes are conducted. In this embodiment, the third interlayer insulating film is etched using the second interlayer insulating film as an etching stopper. Then, the second interlayer insulating film is etched using the first interlayer insulating film as an etching stopper. Thereafter, the first interlayer insulating film is etched.

[0147] Then, electrodes **278** to **286** electrically connected to the impurity regions (**257**, **258**, **261** to **263**, **270***a*, **271***a*, **272***a*, **273***a*) and a pixel electrode **287** electrically connected to the impurity region **265** are formed. As materials for these electrodes and the pixel electrode, a material excellent in reflectivity such as a film mainly containing Al or Ag, or a layered film thereof is used.

[0148] As described above, a driving circuit **301** including a logic circuit portion **303** composed of an n-channel TFT

306 and a p-channel TFT **305** and a sampling circuit portion **304** composed of an n-channel TFT **308** and a p-channel TFT **307**, and a pixel portion **302** including a pixel TFT formed of an n-channel TFT **309** and a storage capacitor **310** can be formed over the same substrate. In the present specification, such a substrate is referred to as an active matrix substrate for convenience.

[**0149**] In this embodiment, the structure of a TFT is varied depending upon each circuit.

[**0150**] The n-channel TFT **309** in the pixel portion **302** requires low power consumption, and it is desirable to construct a TFT structure having a sufficiently low OFF current value. In this embodiment, the low-concentration impurity regions **249** to **252** have a concentration gradient and are designed so as not to be overlapped with the gate electrodes **238***b* and **238***c*. Furthermore, the end portion of the gate electrode in the n-channel TFT **309** is substantially matched with the interface between the channel forming region and the low-concentration impurity region via the gate insulating film. Furthermore, regarding the concentration distribution of the respective low-concentration impurity regions **249** to **252**, an impurity concentration is increased with distance from the channel forming regions **292** and **293**.

[**0151**] **FIG. 13** shows voltage/current characteristics of a TFT (L/W=6 μm/4 μm, width of an LDD region: 1.5 μm) formed by the processes of this embodiment. **FIG. 30** shows voltage/current characteristics of a TFT as a comparative example. The comparative example in **FIG. 30** is different from this embodiment (low-concentration impurity region having a concentration gradient) in that TFT has no concentration gradient in the low-concentration impurity region **2** as shown in **FIG. 29**.

[**0152**] In **FIG. 13, a** threshold value (Vth) of a TFT is 0.415 V, an S value is 0.214 V/dec, an electric field effect mobility (μFE) is 122.1 cm^2/Vs, an ON current value is 1.08×10^{-4} A at Vds (voltage difference between a source region and a drain region)=14 V, and an OFF current value is 1.5×10^{-12} A at Vds=14 V. These values represent satisfactory TFT characteristic values. In particular, an OFF current value is very low, which is suppressed to about 1/10 compared with the comparative example. Furthermore, these TFT characteristics correspond to the results of simulation shown in the embodiment.

[**0153**] **FIG. 11** shows a TEM photograph (cross-section) in the vicinity of the gate electrode of the TFT in the pixel portion.

[**0154**] In this embodiment, the n-channel TFT **309** has a double-gate structure in which two channel forming regions are provided between a source region and a drain region. However, this embodiment is not limited to the double-gate structure. A single gate structure where one channel forming region is formed or a triple gate structure where three channel forming regions are formed may be used.

[**0155**] Impurity regions **253**, **254**, **265**, and **266** that function as one electrode of the storage capacitor **310** are respectively supplied with an impurity element providing an n-type. The storage capacitor **204** is composed of electrodes **239***b* and **239***c*, and the semiconductor layer, using the insulating film **207** as a dielectric. In this embodiment, the impurity regions are not overlapped with the electrodes **239***b* and **239***c*. If they are overlapped with each other, a capacitance can be further increased.

[**0156**] In the sampling circuit portion **304**, typically, the n-channel TFT **308** of an analog switch circuit, an OFF current value is desirably low. In this embodiment, the low-concentration impurity regions **247** and **248** have a concentration gradient, and are designed so as not to be overlapped with the gate electrodes **237***b* and **237***c*. Furthermore, regarding a concentration distribution of the respective low-concentration impurity regions **247** and **248**, an impurity concentration is increased with distance from the channel forming region **291**. If an ON current value or reliability are considered, the low-concentration impurity regions may be overlapped with the gate electrode.

[**0157**] Furthermore, an ON current value or reliability is considered in the p-channel TFT **307**, so that the low-concentration impurity regions **272***b* and **273***b* are overlapped with the gate electrodes **236***a* and **236***b*. Furthermore, regarding a concentration distribution of the respective low-concentration impurity regions **72***b* and **273***b* , an impurity concentration is increased with distance from the channel forming region **290**. Furthermore, the end portion of the gate electrode in the p-channel TFT **307** is substantially matched with the interface between the low-concentration impurity regions **272***b*, **273***b* and the high-concentration impurity regions **272***a*, **273***a* via the gate insulating film.

[**0158**] In the p-channel TFT **305** of the logic circuit portion **303**, an ON current value or reliability is considered. Therefore, the low-concentration impurity regions **270***b* and **271***b* are designed so as to be overlapped with the gate electrodes **234***a* and **234***b*. Regarding a concentration distribution of the respective low-concentration impurity regions **270***b* and **271***b*, an impurity concentration is increased with distance from the channel forming region **288**.

[**0159**] Similarly, the n-channel TFT **306** is designed so that the low-concentration impurity regions **272***b* and **273***b* are overlapped with the gate electrodes **235***a* and **235***b*. Furthermore, regarding a concentration distribution of the respective low-concentration impurity regions **272***b* and **273***b*, an impurity concentration is increased with distance from the channel forming region **289**.

[**0160**] **FIG. 12** shows a TEM photograph (cross-section) in the vicinity of the gate electrode of the n-channel TFT **306**.

[**0161**] **FIG. 14** shows reliability of the n-channel TFT **306** of the driving circuit. Reliability is evaluated by deriving a 10-year guarantee voltage. A 10-year guarantee voltage is obtained by assuming a time required for the maximum value (μFE (max)) of mobility of a TFT to be varied by 10% as a lifetime of the TFT, plotting reciprocals of a drain voltage on a semilogarithmic graph to obtain a linear relationship, and deriving a value of a drain voltage, at which a lifetime becomes 10 years, from the linear relationship.

[**0162**] As shown in **FIG. 14, a** 10-year guarantee voltage of the n-channel TFT **306** is derived to be 20 V or more, which exhibits high reliability.

[**0163**] The p-channel TFT **305** also exhibits high reliability in a 10-year guarantee voltage.

[0164] Another evaluation of reliability is also conducted. Herein, in order to derive a 1000-hour lifetime temperature under an ON-stress, a time required for TFT characteristics (a rising voltage value (Shift-**1**) of an I-V curve) to be varied by 0.1 V at Vg=+20 V and Vd=0 V is plotted with respect to 1000/T (T: absolute temperature (K)), and a temperature (lifetime temperature) varied by 0.1 V during 1000 hours is derived. **FIG. 15** shows the results. As shown in **FIG. 15, a** 1000-hour lifetime temperature of the n-channel TFT **306** is 80° C. or higher.

[0165] Furthermore, the p-channel TFT **305** also has high reliability at a 1000-hour life temperature under an ON-stress. In the case of the p-channel TFT, Vg, and Vd are set to be −20 V and 0 V, respectively.

[0166] Furthermore, in order to check a 1000-hour lifetime temperature under an OFF-stress, a time required for TFT characteristics (the rising voltage value (Shift-**1**) of an I-V curve) to be varied by 0.1 V is plotted with respect to 1000/T (T: absolute temperature (K)) at Vg=0 V and Vd=+20 V, and a temperature (lifetime temperature) varied by 0.1 V during 1000 hours is derived. **FIG. 16** shows the results. As shown in **FIG. 16, a** 1000-hour lifetime temperature of the n-channel TFT **306** is 80° C. or higher.

[0167] The p-channel TFT **305** also has high reliability in a 1000-hour lifetime temperature under an OFF-stress. In the case of the p-channel TFT, Vg and Vd are set to be 0 V and −20 V, respectively.

[0168] Then, in order to derive a change in characteristics of the n-channel TFT under a transient stress, Vd and Vg are set to be +20 V and 2 to 6 V, respectively, and the TFT is left standing at room temperature for 20 hours. **FIGS. 17A and 17B** show a change in ON-characteristics at this time. As shown in **FIG. 17A, a** change in the maximum value (μFE(max)) of mobility of the n-channel TFT **306** after **20** hours can be 10% or less. A transient stress refers to a stress involved when a drain voltage is set to a certain value so as to fix a gate voltage

[0169] In the n-channel TFT **306** of the driving circuit, the width of the low-concentration impurity region overlapped with the gate electrode is 1.5 μm. Depending upon the conventional doping conditions and the like, an impurity may be added by entering a lower portion of the gate electrode. In this case, the width of the low-concentration impurity region overlapped with the gate electrode is about 0.1 μm. Therefore, it is difficult to obtain remarkable effects as shown in this embodiment.

[0170] Furthermore, the p-channel TFT **305** also has high reliability under a transient stress. In the case of the p-channel TFT, Vd and Vg are set to be −20 V and −2 to −6 V, respectively. **(FIG. 17B)**

[0171] Thus, in this embodiment, a driving circuit having the TFT **306** with high reliability and a pixel portion having the pixel TFT **309** with an OFF current value reduced can be simultaneously formed over the same substrate. Furthermore, since an ON current value of the pixel TFT **309** is at the same level as that of the TFT **306**, a ratio of an ON current value to an OFF current value is high. **FIG. 24** shows a ratio of an ON current value to an OFF current value. In **FIG. 24**, "○" represents the pixel TFT of this embodiment. A ratio of an ON current value to an OFF current value is 7.9 to 8.5, which is higher than that of the conventional example represented by "▲". The conventional example is different from this embodiment (low-concentration impurity region having a concentration gradient) in that a TFT has no concentration gradient in the low-concentration impurity region **2** as shown in **FIG. 29**.

Embodiment 2

[0172] In this embodiment, a process for manufacturing an active matrix liquid crystal display device using the active matrix substrate manufactured in Embodiment 1 will be described. The description is made with reference to **FIG. 9**.

[0173] First, after the active matrix substrate with the state of **FIG. 8** is obtained according to Embodiment 1, an orientation film **401** is formed on the active matrix substrate of **FIG. 8** to perform a rubbing process. Note that, in this embodiment, before the formation of the orientation film **401**, an organic resin film such as an acrylic resin film is patterned to form a columnar spacer for keeping a gap between substrates in a desired position. Also, instead of the columnar spacer, a spherical spacer may be distributed over the entire surface.

[0174] Next, an opposing substrate **400** is prepared. A color filter in which a colored layer **402** and a light shielding layer **403** are arranged corresponding to each pixel is provided in this opposing substrate **400**. Also, a light shielding layer **403** is provided in a portion of a driver circuit. A leveling film **404** for covering this color filter and the light shielding layer **403** is provided. Next, a counter electrode **405** made of a transparent conductive film is formed in a pixel portion on the leveling film **404**, and then an orientation film **406** is formed on the entire surface of the opposing substrate **400** to perform a rubbing process.

[0175] Then, the active matrix substrate in which the pixel portion and the driver circuit are formed and the opposing substrates are adhering to each other by using a sealing member **407**. The filler is mixed with the sealing member **407**, and two substrates are adhering to each other with a uniform interval by this filler and the columnar spacer. After that, a liquid crystal material **408** is injected into a space between both substrates and then completely encapsulated by a sealing member (not shown). A known liquid crystal material may be used as the liquid crystal material **408**. Thus, the active matrix liquid crystal display device as shown in **FIG. 9** is completed. If necessary, the active matrix substrate or the opposing substrate is cut with a predetermined shape. Also, a polarization plate and the like are suitably provided using a known technique. And, an FPC is adhering to the active matrix liquid crystal display device using a known technique.

[0176] A structure of a liquid crystal module thus obtained will be described using a top view of **FIG. 10**. Note that the same reference symbols are used for portions corresponding to those of **FIG. 9**.

[0177] The top view of **FIG. 10** shows the state that the active matrix substrate and the opposing substrate **400** are adhering to each other through the sealing member **407**. Over the active matrix substrate, an external input terminal **409** to which the pixel portion, the driver circuit, and the FPC (flexible printed circuit) are adhering, a wiring **410** for connecting the external input terminal **409** with an input portion of the respective circuits, and the like are formed. Also, the color filter and the like are formed in the opposing substrate **400**.

[0178] A light shielding layer **403***a* is provided in the opposing substrate side so as to overlap with a gate wiring side driver circuit **301***a*. Also, a light shielding layer **403***b* is provided in the opposing substrate side so as to overlap with a source wiring side driver circuit **301***b*. In a color filter **402** which is provided over the opposing substrate side on a pixel portion **302**, a light shielding layer and colored layers for respective colors red color (R), green color (G), and blue color (B) are provided corresponding to each pixel. Actually, a color display is formed using three colors, that is, the colored layer for the red color (R), the colored layer for the green color (G), and the colored layer for the blue color (B). Note that the colored layers for respective colors are arbitrarily arranged.

[0179] Here, for a color display, the color filter **402** is provided over the opposing substrate. However, the present invention is not particularly limited to this case, and in manufacturing the active matrix substrate, the color filter may be formed over the active matrix substrate.

[0180] Also, in the color filter, the light shielding layer is provided between adjacent pixels such that a portion except for a display region is shielded. The light shielding layers **403***a* and **403***b* are provided in a region covering the driver circuit. However, when the liquid crystal display device is incorporated into an electronic device as a display portion thereof, the region covering the driver circuit is covered with a cover. Thus, the color filter may be constructed without the light shielding layer. In manufacturing the active matrix substrate, the light shielding layer may be formed over the active matrix substrate.

[0181] Also, without providing the light shielding layer, the colored layers composing the color filter may be suitably arranged between the opposing substrate and the counter electrode such that light shielding is made by a lamination layer laminated with a plurality of layers. Thus, the portion except for the display region (gaps between pixel electrodes) and the driver circuit may be light-shielded.

[0182] Also, the FPC **411** which is composed of the base film and the wiring is adhering to the external input terminal by using an anisotropic conductive resin. Further, a reinforced plate is provided to increase a mechanical strength.

[0183] The liquid crystal module manufactured above can be used as the display portion of various electronic equipment.

Embodiment 3

[0184] In this embodiment, the case will be described in which an offset region is provided between a channel forming region and a low-concentration impurity region. **FIG. 18** is a schematic view thereof.

[0185] Referring to **FIG. 18**, in offset regions **501***b* and impurity regions (LDD regions, source region or drain region) **502***a*, **502***b*, **503***a*, and **503***b* provided so as to interpose a channel forming region **501***a* therebetween, it is assumed that there is a concentration distribution in which a concentration of an impurity element imparting one conductivity is increased with distance from the channel forming region **501***a*. More specifically, there is provided an impurity region **502** in which a concentration of an impurity element (phosphorus) is gradually increased with distance from the end portion of the gate electrode **505** in the channel length direction toward the periphery portion of the semiconductor layer.

[0186] In this embodiment, the impurity region **502** having such a concentration gradient is intentionally formed. Furthermore, an offset region is formed between a channel forming region and a low-concentration impurity region. Thus, a considerably low OFF current value can be obtained. A gate electrode **505** is overlapped with the channel forming region **501***a* via a gate insulating film **504**. However, the gate electrode **505** is arranged so as not to overlap with the offset region **501***b* and the impurity region **502**. In **FIG. 18**, reference numeral **500** denotes a substrate having an insulating surface, **506** denotes an interlayer insulating film, and **507** and **508** denote a source electrode and a drain electrode.

[0187] In the present specification, the offset region **501***b* refers to a region that has substantially the same impurity concentration as that of the channel forming region **501**, and is not overlapped with the gate electrode **505**.

[0188] In order to produce the offset regions **501***b*, etching processing using etching gas with a low selection ratio with respect to W may be conducted during the third etching process shown in Embodiment 1. Alternatively, it may also be possible that, after forming impurity regions, an electrode in a tapered shape is subjected to isotrophic etching to form the offset regions **501***b*.

[0189] **FIG. 19** shows voltage/current characteristics of a TFT (L/W=6×2 μm/4 μm, and width of an offset region: 0.5 μm; width of an LDD region: 1.5 μm) of this embodiment. Because of a double-gate structure, the two channel forming region, L/W=6 μm/4 μm is represented as L/W=6×2 μm/4 μm. A threshold value (Vth) of the TFT is 0.715 V, an S value is 0.243 V/dec, field effect mobility (μFE) is 90.7 cm^2/Vs, an ON current value is 7.85×10^{-5}A at Vds=14 V, and an OFF current value is 9.5×10^{-13} A at Vds=14 V. In **FIG. 19**, these show satisfactory TFT characteristics values. In particular, an OFF current value is very low, and a ratio of an ON current value to an OFF current value is high, so that the TFT of this embodiment is suitable as a pixel TFT. In **FIG. 24**, "□" represents the pixel TFT of this embodiment, and a ratio of an ON current value to an OFF current value is 7.9 to 8.4, which is higher than the conventional example represented by "▲".

[0190] Furthermore, **FIG. 20** shows a change in characteristics of the n-channel TFT under a transient stress. **FIG. 20** also shows, as comparative examples, the pixel TFT (●) of Embodiment 1 and the pixel TFT (▲) of the conventional example (low-concentration impurity region without concentration gradient). As shown in **FIG. 20**, the pixel TFT (10-year guarantee voltage: 12 V) of this embodiment represented by "□" exhibits higher reliability than that of the conventional example (10-year guarantee voltage: 10 V) and Embodiment 1 (10-year guarantee voltage: 10.3 V).

Embodiment 4

[0191] In this embodiment, an active matrix substrate different from that of Embodiment 1 and a method of manufacturing the same will be described with reference to **FIGS. 21 and 22**. In this embodiment, a transmission type display apparatus is formed by using a transparent conductive film for a pixel electrode. As the transparent conductive

film, an alloy of indium oxide and tin oxide (ITO), an alloy of indium oxide and zinc oxide (In_2O_3—ZnO), zinc oxide (ZnO), and the like may be used.

[0192] In this embodiment, after an interlayer insulating film **609** is formed, a pixel electrode **600** made of a transparent conductive film is patterned using a photomask. Thereafter, contact holes are formed in the interlayer insulating film **609**. Then, a connecting electrode **611** is formed so as to be overlapped with the pixel electrode **600**. The connecting electrode **611** is connected to a drain region **625** through the contact hole. A source electrode and a drain electrode of another TFT are also formed simultaneously with the connecting electrode **611**.

[0193] Furthermore, as shown in **FIG. 21, a** source line **610** of the pixel portion is formed on the same insulating film as that of a gate electrode **629**, and is connected to a source region **623** of an n-channel TFT **607** of the pixel portion through a connecting electrode **613**.

[0194] A gate line **612** is formed on an insulating film **609** different from that of the gate electrode **629**, and is connected to the gate electrode **629** through the contact hole. The gate line **612** also functions as a light-blocking film for blocking light to channel forming regions **617** and **618**.

[0195] In the pixel portion **606**, an n-channel TFT **607** and a storage capacitor **608** are formed. The n-channel TFT **607** has a double-gate structure, which is the same as that of the n-channel TFT **309** in **FIG. 8**. The channel forming regions **617** and **618**, low-concentration impurity regions **619** to **622**, and high-concentration impurity regions **623** to **625** constitute an active layer. Reference numeral **623** denotes a source region, and **625** denotes a drain region.

[0196] One electrode **630** constituting the storage capacitor **608** is formed in the same pattern as that of the gate electrode **629**. The other electrode is a semiconductor layer composed of high-concentration impurity region **634** and **638** with boron of high concentration added thereto, low-concentration impurity region **635** and **637**, and a region **636** with an impurity element hardly added thereto. The high-concentration impurity region **634** is connected to the connecting electrode **614** through the pixel electrode **600** and the contact hole.

[0197] In the pixel structure of this embodiment, the end portion of the pixel electrode **600** is arranged so as to be overlapped with the source line **610** in such a manner that a gap between the pixel electrodes is shielded from light without using a black matrix.

[0198] The driving circuit **601** has the same structure as that of Embodiment 1. Therefore, the detailed description thereof will be omitted here. An n-channel TFT **603** corresponds to the n-channel TFT **306** in **FIG. 9**. A p-channel TFT **604** corresponds to the p-channel TFT **305** in **FIG. 9**. An n-channel TFT **605** corresponds to the n-channel TFT **308**.

[0199] **FIG. 22** is a top view of a pixel portion of an active matrix substrate manufactured in this embodiment. The components corresponding to those in **FIG. 21** are denoted with the same reference numerals as those therein. A dashed line A-A' in **FIG. 21** corresponds to a cross-section taken along a dashed line A-A' in **FIG. 22**. A dashed line B-B' in **FIG. 21** corresponds to a cross-section taken along a dashed line B-B' in **FIG. 22**.

[0200] Furthermore, if the processes described in this embodiment are conducted, the number of photomasks required for manufacturing an active matrix substrate may be six. This shortens production processes, and contributes to the reduction in a production cost and enhancement of yield.

Embodiment 5

[0201] In this embodiment, exemplary production of a light-emitting display apparatus provided with an electroluminescence (EL) element will be described with reference to **FIGS. 25A and 25B**.

[0202] **FIG. 25A** is a top view showing an EL module. **FIG. 25B** is a cross-sectional view taken along a line A-A' in **FIG. 25A**. A pixel portion **702**, a source-side driving circuit **701**, and a gate-side driving circuit **703** are formed on a substrate **700** (e.g., a glass substrate, a crystallized glass substrate, a plastic substrate, or the like) having an insulating surface. Furthermore, reference numerals **718** and **719** denote a sealant and a protective (DLC) film, respectively. The pixel portion and the driving circuit portion are covered with a sealant **718**, and the sealant is covered with the protective film **719**. The layered structure is further sealed with a cover material using an adhesive.

[0203] Reference numeral **708** denotes connection wiring for transmitting a signal to be input to the source-side driving circuit **701** and the gate-side driving circuit **703**, which receives a video signal and a clock signal from a flexible printed circuit (FPC) **709** to be an external input terminal. Herein, although only the FPC is shown, the FPC may be provided with a printed wiring board (PWB). In the present specification, the light-emitting apparatus intends to include not only a body of a light-emitting apparatus but also the apparatus provided with an FPC or PWB.

[0204] Next, the cross-sectional structure of the above-mentioned EL module will be described with reference to **FIG. 25B**. An insulating film **710** is formed on a substrate **700**. The pixel portion **702** and the gate-side driving circuit **703** are formed above the insulating film **710**. The pixel portion **702** is composed of a plurality of pixels including a current control TFT **711** and a pixel electrode **712** electrically connected to a drain of the current control TFT **711**. The gate-side driving circuit **703** is formed of a CMOS circuit obtained by combining an n-channel TFT **713** and a p-channel TFT **714**.

[0205] The TFTs (including **711**, **713**, and **714**) may be provided in accordance with Embodiment 1 or 3.

[0206] The pixel electrode **712** functions as a positive electrode (anode) of the EL element. Banks **715** are formed at both ends of the pixel electrode **712**. An EL layer **716** and a negative electrode (cathode) **717** of the EL element are formed on the pixel electrode **712**.

[0207] The EL layer **716** (for emitting light and moving carriers for light emission) may be formed by appropriately combining a light-emitting layer, a charge transfer layer, and a charge injection layer. For example, a low molecular organic EL material and a high molecular organic EL material may be used. Furthermore, as the EL layer, a thin film made of a light-emitting material (singlet compound) that emits light (fluoresces) due to singlet excitation, or a thin film made of a light-emitting material (triplet com-

pound) that emits light (phosphoresces) due to triplet excitation may be used. As the charge transfer layer and the charge injection layer, an inorganic material such as silicon carbide can be used. As organic EL materials and inorganic materials, materials which are known can be used.

[0208] A negative electrode (cathode) **717** may function as wiring common to all the pixels, and is electrically connected to the FPC **709** via the connection wiring **708**. All the elements contained in the pixel portion **702** and the gate-side driving circuit **703** are covered with the negative electrode **717**, the sealant **718**, and the protective film **719**.

[0209] As the sealant **718**, it is preferable to use a material that is transparent or semi-transparent as much as possible to visible light. It is also desirable that the sealant **718** is made of a material transmitting moisture or oxygen as less as possible.

[0210] It is also preferable that after the light-emitting element is completely covered with the sealant **718**, the protective film **719** made of a DLC film or the like is provided at least over the surface (exposed surface) of the sealant **718** as shown in **FIG. 25B**. A protective film may also be provided over the entire surface of the substrate including its reverse surface. Herein, care should be taken so that a protective film is not formed on a portion in which the external input terminal (FPC) is provided. A protective film may be prevented from being formed by using a mask. Alternatively, a protective film may be prevented from being formed by covering the external input terminal portion with a tape used as a masking tape in a CVD apparatus.

[0211] The EL element is sealed with the sealant **718** and the protective film with the above-mentioned structure, whereby the EL element can be completely cut off from outside, and a material accelerating degradation of the EL layer by oxidation, such as moisture and oxygen, can be prevented from entering from outside. Thus, a light-emitting apparatus with high reliability can be obtained.

[0212] It may also be possible that the pixel electrode is made of a negative electrode, and the EL layer and a positive electrode are stacked so that light is emitted in an opposite direction to that shown in **FIG. 25B**. An active layer in each TFT is covered with a gate insulating film, and a gate electrode is formed so as to be overlapped with a channel forming region via the gate insulating film. Furthermore, an interlayer insulating film is provided so as to cover the gate electrode, and an electrode is provided on the interlayer insulating film so as to be electrically connected to a source region or a drain region of each TFT. There is also provided a negative electrode electrically connected to a current control TFT that is an n-channel TFT. Furthermore, an insulating layer is provided which has openings so as to cover the end portions of the negative electrode to form tapered edges. Furthermore, an organic layer and an organic compound layer composed of a hole injection layer are provided on the negative electrode, and a positive electrode is provided on the organic compound layer, whereby the light-emitting element is formed.

[0213] According to this embodiment, a light-emitting apparatus can be obtained, which has a light-emitting element with a structure in which light generated in the organic compound layer (EL layer) is taken in a direction opposite to an arrow direction indicated by arrow in **FIG. 25B**.

Embodiment 6

[0214] The driver circuit portion and the pixel portion fabricated by implementing the present invention can be utilized for various modules (active matrix liquid crystal module, active matrix EL module and active matrix EC module). Namely, the present invention can be implemented onto all of the electronic apparatuses that incorporate such modules as a display portion.

[0215] Following can be given as such electronic apparatuses: video cameras; digital cameras; head mounted displays (goggle type displays); car navigation systems; projectors; car stereo; personal computers; portable information terminals (mobile computers, mobile phones or electronic books etc.) etc. Examples of these are shown in FIGS. **26A-26F**, **27A-27D** and **28A-28C**.

[0216] **FIG. 26A** is a personal computer which comprises: a main body **2001**; an image input section **2002**; a display section **2003**; and a key board **2004**. The present invention can be applied to the display section **2003**.

[0217] **FIG. 26B** is a video camera which comprises: a main body **2101**; a display section **2102**; a voice input section **2103**; operation switches **2104**; a battery **2105** and an image receiving section **2106**. The present invention can be applied to the display section **2102**.

[0218] **FIG. 26C** is a mobile computer which comprises: a main body **2201**; a camera section **2202**; an image receiving section **2203**; operation switches **2204** and a display section **2205**. The present invention can be applied to the display section **2205**.

[0219] **FIG. 26D** is a goggle type display which comprises: a main body **2301**; a display section **2302**; and an arm section **2303**. The present invention can be applied to the display section **2302**.

[0220] **FIG. 26E** is a player using a recording medium which records a program (hereinafter referred to as a recording medium) which comprises: a main body **2401**; a display section **2402**; a speaker section **2403**; a recording medium **2404**; and operation switches **2405**. This apparatus uses DVD (digital versatile disc), CD, etc. for the recording medium, and can perform music appreciation, film appreciation, games and use for Internet. The present invention can be applied to the display section **2402**.

[0221] **FIG. 26F** is a digital camera which comprises: a main body **2501**; a display portion **2502**; a view finder **2503**; operation switches **2504**; and an image receiving section (not shown in the figure). The present invention can be applied to the display section **2502**.

[0222] **FIG. 27A** is a front type projector which comprises: a projection system **2601**; and a screen **2602**. The present invention can be applied to the liquid crystal module **2808** which forms a part of the projection system **2601**.

[0223] **FIG. 27B** is a rear type projector which comprises: a main body **2701**; a projection system **2702**; a mirror **2703**; and a screen **2704**. The present invention can be applied to the liquid crystal module **2808** which forms a part of the projection system **2702**.

[0224] **FIG. 27C** is a diagram which shows an example of the structure of a projection system **2601** and **2702** in **FIGS. 27A and 27B**, respectively. Each of projection systems **2601**

and **2702** comprises: an optical light source system **2801**; mirrors **2802** and **2804** to **2806**; a dichroic mirror **2803**; a prism **2807**; a liquid crystal module **2808**; a phase differentiating plate **2809**; and a projection optical system **2810**. The projection optical system **2810** comprises an optical system having a projection lens. Though the present embodiment shows an example of **3**-plate type, this is not to limit to this example and a single plate type may be used for instance. Further, an operator may appropriately dispose an optical lens, a film which has a function to polarize light, a film which adjusts a phase difference or an IR film, etc. in the optical path shown by an arrow in **FIG. 27C**.

[**0225**] **FIG. 27D** is a diagram showing an example of a structure of an optical light source system **2801** in **FIG. 27C**. In the present embodiment the optical light source system **2801** comprises: a reflector **2811**; a light source **2812**; lens arrays **2813** and **2814**; a polarizer conversion element **2815**; and a collimator lens **2816**. Note that the optical light source system shown in **FIG. 27D** is merely an example and the structure is not limited to this example. For instance, an operator may appropriately dispose an optical lens, a film which has a function to polarize light, a film which adjusts a phase difference or an IR film, etc.

[**0226**] Note that the projectors shown FIGS. **27A-27D** are the cases of using a transmission type electro-optical devices, and applicable examples of a reflection type electro-optical device and an EL module are not shown.

[**0227**] **FIG. 28A** is a mobile phone which comprises: a main body **2901**; a voice output section **2902**; a voice input section **2903**; a display section **2904**; operation switches **2905**; an antenna **2906**; and an image input section (CCD, image sensor, etc.) **2907** etc. The present invention can be applied to the display section **2904**.

[**0228**] **FIG. 28B** is a portable book (electronic book) which comprises: a main body **3001**; display sections **3002** and **3003**; a recording medium **3004**; operation switches **3005** and an antenna **3006** etc. The present invention can be applied to the display sections **3002** and **3003**.

[**0229**] **FIG. 28C** is a display which comprises: a main body **3101**; a supporting section **3102**; and a display section **3103** etc. The present invention can be applied to the display section **3103**.

[**0230**] Further, the display shown in **FIG. 28C** is a medium-small type or big type, for example, 5 to 20 inches display size. It is preferable that the mass-producing of the display is performed to form displays of such sizes by multiple cutting from a substrate which is composed by not less than 1 m length of one side.

[**0231**] As described above, the applicable range of the present invention is very large, and the invention can be applied to electronic apparatuses of various areas. Note that the electronic devices of the present embodiment can be achieved by utilizing any combination of constitutions in Embodiments 1 to 5.

Embodiment 7

[**0232**] In this embodiment, in a TFT (channel length: L/channel width: W=10 μm/8 μm) of a driving circuit, a relationship between a length of an impurity region (that is also referred to as an "Lov region") overlapped with a gate electrode in a channel length direction and reliability will be described.

[**0233**] In **FIG. 14, a** time required for the maximum value (μFE (max)) of mobility of a TFT to be varied by 10% is assumed as a lifetime of the TFT in the case where the length of the Lov region is 1.5 μm. Reciprocals of a drain voltage are plotted on a semilogarithmic, graph to obtain a linear relationship, and a value of a drain voltage, at which a lifetime becomes 10 years, is derived from the linear relationship as a 10-year guarantee voltage. According to this embodiment, in the case where the length of the Lov region is prescribed to be 0.5 μm, 0.78 μm, 1 μm, 1.5 μm, and 1.7 μm, respectively, a time required for an ON current value of a TFT to be varied by 10% is assumed to be a life of the TFT. Reciprocals of a drain voltage are plotted on a semilogarithmic graph to obtain a linear relationship, and a value of a drain voltage, at which a life becomes 10 years, is derived from the linear relationship as a 10-year guarantee voltage. **FIG. 31** shows the results.

[**0234**] **FIG. 31** also shows the results obtained by deriving a value of a drain voltage, at which a time required for an ON current value of a TFT to be varied by 10% is 20 hours in a transient text, as a 20-hour guarantee voltage.

[**0235**] As shown in **FIG. 31**, assuming that a TFT is used in a 16 V-level apparatus and considering 20% margin, the length of the Lov region of an n-channel TFT to be 19.2 V (16×1.2) or more is preferably 1 μm or more at a 20-hour guarantee voltage, and 1.5 μm or more at a 10-hour guarantee voltage.

Embodiment 8

[**0236**] In this embodiment, in a case that the gate electrode is arranged as line width design sizes of 3-10 μm, a relationship between the line width design sizes and lengths in the channel length direction of the impurity region (as called Lov region) overlapped with the gate electrode is shown in **FIG. 32**. Note, the "line width" is same as a "wiring width". In Embodiment 8, a width of the gate electrode is described as an example.

[**0237**] According to Embodiment 1, when the gate electrode having the taper shape is formed by etching, a length of Lov region varies depending on the line width.

[**0238**] The line widths to be obtained are defined as 3 μm, 4 μm, 6 μm, 8 μm and 10 μm, with respect to the length (Lov length) in the channel length direction of the Lov region which is formed the same etching as Embodiment 1, the average values thereof are measured. Note, the length of Lov region here corresponds to a length of the taper portion formed in an end portion of each side of the gate electrode.

[**0239**] When the line width to be obtained is 3 μm, the average value of the Lov length is 1.09 μm and an average value of the channel length is 0.86 μm. That is, according to 0.86+2×(1.09)=3.04 μm, the gate electrode width of 3.04 μm is obtained.

[**0240**] Further, as shown in **FIG. 32**, in a case that the line width is 4 μm, the average value of Lov length is 1.13 μm; 6 μm, 1.24 μm; 8 μm, 1.32 μm; and 10 μm, 1.39 μm, respectively.

[0241] Accordingly, it is preferable to determine the line widths of wirings used in the pixel portion and the driving circuit portion based on the data in order to arrange Lov lengths to be necessary.

[0242] According to the present invention, a pixel TFT having a considerably low OFF current value and a high ratio of an ON current value to an OFF current value can be realized. Furthermore, a driving circuit is provided with a TFT having a high ON current value and high reliability, so that a semiconductor apparatus having excellent display characteristics can be realized. Furthermore, since an impurity region is formed by using a taper portion, the number of processes is reduced, whereby a production cost can be reduced and production yield can be enhanced.

What is claimed is:

1. A semiconductor device including a thin film transistor comprising:

a semiconductor film formed on an insulating surface;

an insulating film on the semiconductor film;

a gate electrode on the insulating film;

said the semiconductor film including:

a channel forming region overlapped with the gate electrode;

an impurity region in contact with the channel forming region,

wherein the impurity region has a concentration distribution in which an impurity concentration is increased with distance from the channel forming region.

2. A semiconductor device including a thin film transistor comprising:

a semiconductor film on an insulating surface;

an insulating film on the semiconductor film;

a gate electrode on the insulating film;

said semiconductor film including:

a channel forming region overlapped with the gate electrode;

an offset region in contact with the channel forming region;

an impurity region in contact with the offset region,

wherein the impurity region has a concentration distribution in which an impurity concentration is increased with distance from the channel forming region.

3. A device according to claim 1,

wherein the impurity region has the concentration distribution in which the impurity concentration is continuously increased with distance from the channel forming region.

4. A device according to claim 1,

wherein the impurity region has a concentration distribution in which an impurity concentration is increased with distance from the channel forming region in a channel length direction.

5. A device according to claim 1,

wherein the thin film transistor is an n-channel thin film transistor.

6. A semiconductor device comprising:

a pixel portion and a driving circuit on an insulating surface;

an n-channel thin film transistor and a p-channel thin film transistor in the driving circuit;

a pixel thin film transistor including a semiconductor film in the pixel portion;

said semiconductor film including a channel forming region and an impurity region;

a pixel electrode connected to the pixel thin film transistor in the pixel portion,

wherein the impurity region has a concentration distribution in which an impurity concentration is increased with distance from the channel forming region.

7. A device according to claim 6, further comprising:

a gate electrode in the n-channel thin film transistor, said gate electrode having a taper portion;

an impurity region in the n-channel thin film transistor,

wherein the taper portion is overlapped with the impurity region with an insulating film interposed therebetween.

8. A device according to claim 6, further comprising:

an offset region between the channel forming region and the impurity region in the pixel thin film transistor.

9. A device according to claim 6, further comprising:

a gate electrode in the pixel thin film transistor,

wherein the gate electrode is not overlapped with the channel forming region with an insulating film interposed therebetween in the pixel thin film transistor.

10. A device according to claim 1,

wherein the gate electrode includes a first conductive layer and a second conductive layer on the first conductive layer.

11. A device according to claim 1,

wherein the impurity region includes one of a source region and a drain region.

12. A device according to claim 1,

wherein the concentration distribution is an exponential distribution.

13. A device according to claim 1,

wherein the concentration distribution is a normal distribution.

14. A device according to claim 1,

wherein the concentration distribution is a linear distribution with a tilt.

15. A device according to claim 1,

wherein the impurity concentration is a concentration of an impurity to impart an one conductivity type to the semiconductor film.

16. A device according to claim 1,

wherein the semiconductor device is a liquid crystal module.

17. A device according to claim 1,

wherein the semiconductor device is an EL module.

18. A device according to claim 1,

wherein the impurity region is formed on both sides of the channel forming region.

19. A device according to claim 1,

wherein a thickness of the insulating film is different between a first region at a largest distance from the channel forming region and a second region at a smallest distance therefrom.

20. A device according to claim 1,

wherein the impurity region includes a first portion and a second portion,

wherein the impurity concentration is increased in the first portion while the impurity concentration is constant in the second portion,

wherein the first portion has a length in a range of 1 μm or more in a channel length direction.

21. A device according to claim 1,

wherein the semiconductor device is one selected from the group consisting of a video camera, a digital camera, a projector, a goggle type display, a car navigation system, a personal computer and a portable information terminal.

22. A method of manufacturing a semiconductor device, said method comprising the steps of:

forming a semiconductor film on an insulating surface;

forming an insulating film on the semiconductor film;

forming a conductive film having a taper portion on the insulating film;

adding an impurity element imparting one conductivity type to the semiconductor film through the taper portion and the insulating film to form an impurity region;

selectively removing only a taper portion of the conductive film to form a gate electrode,

wherein an impurity concentration is increased toward an end portion of the taper portion in the impurity region.

23. A method of manufacturing a semiconductor device, said method comprising the steps of:

forming a semiconductor film on an insulating surface;

forming an insulating film on the semiconductor film;

forming a gate electrode on the insulating film;

etching the insulating film to form an impurity layer with a taper portion on the semiconductor film;

adding an impurity element imparting one conductivity type to the semiconductor film through the taper portion and the insulating film to form an impurity region;

selectively removing only a taper portion of the conductive film to form a gate electrode,

wherein an impurity concentration is increased toward an end portion of the taper portion in the impurity region

.

24. A device according to claim 2,

wherein the impurity region has the concentration distribution in which the impurity concentration is continuously increased with distance from the channel forming region.

25. A device according to claim 2,

wherein the impurity region has a concentration distribution in which an impurity concentration is increased with distance from the channel forming region in a channel length direction.

26. A device according to claim 2,

wherein the thin film transistor is an n-channel thin film transistor.

27. A device according to claim 2,

wherein the gate electrode includes a first conductive layer and a second conductive layer on the first conductive layer.

28. A device according to claim 2,

wherein the impurity region includes one of a source region and a drain region.

29. A device according to claim 2,

wherein the concentration distribution is an exponential distribution.

30. A device according to claim 2,

wherein the concentration distribution is a normal distribution.

31. A device according to claim 2,

wherein the concentration distribution is a linear distribution with a tilt.

32. A device according to claim 2,

wherein the impurity concentration is a concentration of an impurity to impart an one conductivity type to the semiconductor film.

33. A device according to claim 2,

wherein the semiconductor device is a liquid crystal module.

34. A device according to claim 2,

wherein the semiconductor device is an EL module.

35. A device according to claim 2,

wherein the impurity region is formed on both sides of the channel forming region.

36. A device according to claim 2,

wherein a thickness of the insulating film is different between a first region at a largest distance from the channel forming region and a second region at a smallest distance therefrom.

37. A device according to claim 2,

wherein the impurity region includes a first portion and a second portion,

wherein the impurity concentration is increased in the first portion while the impurity concentration is constant in the second portion,

wherein the first portion has a length in a range of 1 μm or more in a channel length direction.

38. A device according to claim 2,

wherein the semiconductor device is one selected from the group consisting of a video camera, a digital

camera, a projector, a goggle type display, a car navigation system, a personal computer and a portable information terminal.

39. A device according to claim 6, further comprising:

a gate electrode in the pixel thin film transistor,

wherein the gate electrode includes a first conductive layer and a second conductive layer on the first conductive layer.

40. A device according to claim 6,

wherein the impurity region includes one of a source region and a drain region.

41. A device according to claim 6,

wherein the concentration distribution is an exponential distribution.

42. A device according to claim 6,

wherein the concentration distribution is a normal distribution.

43. A device according to claim 6,

wherein the concentration distribution is a linear distribution with a tilt.

44. A device according to claim 6,

wherein the impurity concentration is a concentration of an impurity to impart an one conductivity type to the semiconductor film.

45. A device according to claim 6,

wherein the semiconductor device is a liquid crystal module.

46. A device according to claim 6,

wherein the semiconductor device is an EL module.

47. A device according to claim 6,

wherein the impurity region is formed on both sides of the channel forming region.

48. A device according to claim 6, further comprising:

an insulating film on the semiconductor film in the pixel thin film transistor,

wherein a thickness of the insulating film is different between a first region at a largest distance from the channel forming region and a second region at a smallest distance therefrom.

49. A device according to claim 6,

wherein the impurity region includes a first portion and a second portion,

wherein the impurity concentration is increased in the first portion while the impurity concentration is constant in the second portion,

wherein the first portion has a length in a range of 1 μm or more in a channel length direction.

50. A device according to claim 6,

wherein the semiconductor device is one selected from the group consisting of a video camera, a digital camera, a projector, a goggle type display, a car navigation system, a personal computer and a portable information terminal.

* * * * *