US007523484B2

(12) **United States Patent**
Lum et al.

(10) **Patent No.: US 7,523,484 B2**
(45) **Date of Patent: Apr. 21, 2009**

(54) **SYSTEMS AND METHODS OF CONTROLLING NETWORK ACCESS**

(75) Inventors: **Stacey C. Lum**, Los Altos, CA (US); **Yuhshiow Alice Lee**, Saratoga, CA (US)

(73) Assignee: **InfoExpress, Inc.**, Mountain View, CA (US)

(*) Notice: Subject to any disclaimer, the term of this patent is extended or adjusted under 35 U.S.C. 154(b) by 876 days.

(21) Appl. No.: **10/949,179**

(22) Filed: **Sep. 24, 2004**

(65) **Prior Publication Data**

US 2005/0063400 A1 Mar. 24, 2005

Related U.S. Application Data

(60) Provisional application No. 60/513,080, filed on Oct. 21, 2003, provisional application No. 60/505,582, filed on Sep. 24, 2003.

(51) **Int. Cl.**
H04L 9/00 (2006.01)
H04L 9/32 (2006.01)
G06F 15/16 (2006.01)

(52) **U.S. Cl.** **726/1**; 726/2; 726/3; 726/15

(58) **Field of Classification Search** 726/1–4, 726/12, 15, 23–24; 713/150, 153, 168; 709/225, 709/228–229
See application file for complete search history.

(56) **References Cited**

U.S. PATENT DOCUMENTS

1,830,383 A 11/1931 Bos
1,860,326 A 5/1932 Jackson
2,131,067 A 9/1938 Paden
2,247,592 A 7/1941 Swift
2,519,435 A 8/1950 Byrd, Jr.
2,731,056 A 1/1956 Anson
3,100,664 A 8/1963 Duval
3,701,557 A 10/1972 Centofante
4,181,339 A 1/1980 Rigsby
4,951,984 A 8/1990 Huang
5,010,622 A 4/1991 Morita
5,606,668 A 2/1997 Shwed
5,701,635 A 12/1997 Hawkes
5,842,002 A * 11/1998 Schnurer et al. 703/21

(Continued)

FOREIGN PATENT DOCUMENTS

WO WO 2006/029217 A2 3/2006

OTHER PUBLICATIONS

"Network Access Control from Mirage Networks," Mirage Networks, 2006.

(Continued)

Primary Examiner—Hosuk Song
(74) *Attorney, Agent, or Firm*—Carr & Ferrell LLP

(57) **ABSTRACT**

A new approach to network security includes manipulating an access point such that an initial communication from an external device is passed to a restricted subset of a computing network including a gatekeeper. The gatekeeper is configured to enforce a security policy against the external device before granting access to a less-restricted subset of the computing network. If requirements of the security policy are satisfied, then the gatekeeper reconfigures the access point such that further communication from the external device may be received by elements of the less-restricted subset. Enforcement of the security policy optionally includes performing a security audit of the external device.

82 Claims, 10 Drawing Sheets

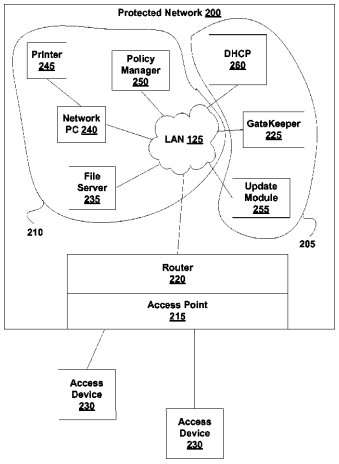

U.S. PATENT DOCUMENTS

5,944,368	A	8/1999	Hastings
5,968,176	A	10/1999	Nessett et al.
6,006,259	A	12/1999	Adelman et al.
6,044,402	A	3/2000	Jacobson et al.
6,304,973	B1	10/2001	Williams
6,363,489	B1	3/2002	Comay et al.
6,393,484	B1	5/2002	Massarani
6,745,333	B1	6/2004	Thomsen
6,769,000	B1	7/2004	Akhtar et al.
6,834,414	B2	12/2004	Chiu
2002/0010869	A1	1/2002	Kim
2002/0120749	A1	8/2002	Widegren et al.
2003/0023880	A1	1/2003	Edwards et al.
2003/0046586	A1	3/2003	Bheemarasetti et al.
2003/0126464	A1	7/2003	McDaniel et al.
2003/0191966	A1	10/2003	Gleichauf
2003/0208694	A1	11/2003	Fang
2004/0054926	A1	3/2004	Ocepek et al.
2004/0098610	A1	5/2004	Hrastar
2004/0103314	A1	5/2004	Liston
2004/0162994	A1	8/2004	Cohen et al.
2004/0181690	A1	9/2004	Rothermel et al.
2004/0193912	A1	9/2004	Li et al.
2004/0243835	A1	12/2004	Terzis et al.
2005/0027837	A1	2/2005	Roese et al.
2005/0044197	A1	2/2005	Lai
2005/0050365	A1	3/2005	Seki et al.
2005/0278775	A1	12/2005	Ross
2006/0095968	A1	5/2006	Portolani et al.
2006/0147043	A1 *	7/2006	Mann et al. 380/270
2006/0161970	A1	7/2006	Hopen et al.
2006/0164199	A1	7/2006	Gilde et al.
2007/0064689	A1	3/2007	Shin et al.
2008/0060067	A1	3/2008	Kim et al.

OTHER PUBLICATIONS

Whalen, S., "An Introduction to ARP Spooling," Apr. 2001, Revision 1.82, located at http://www.node99.org/projects/arpspoof/.

U.S. Appl. No. 11/227,679, Stacey C. Lum, Dynamic Address Assignment For Access Control on DHCP Networks, filed Sep. 14, 2005.

U.S. Appl. No. 11/433,225, Stacey C. Lum, Network Access Control Management, filed May 11, 2006.

* cited by examiner

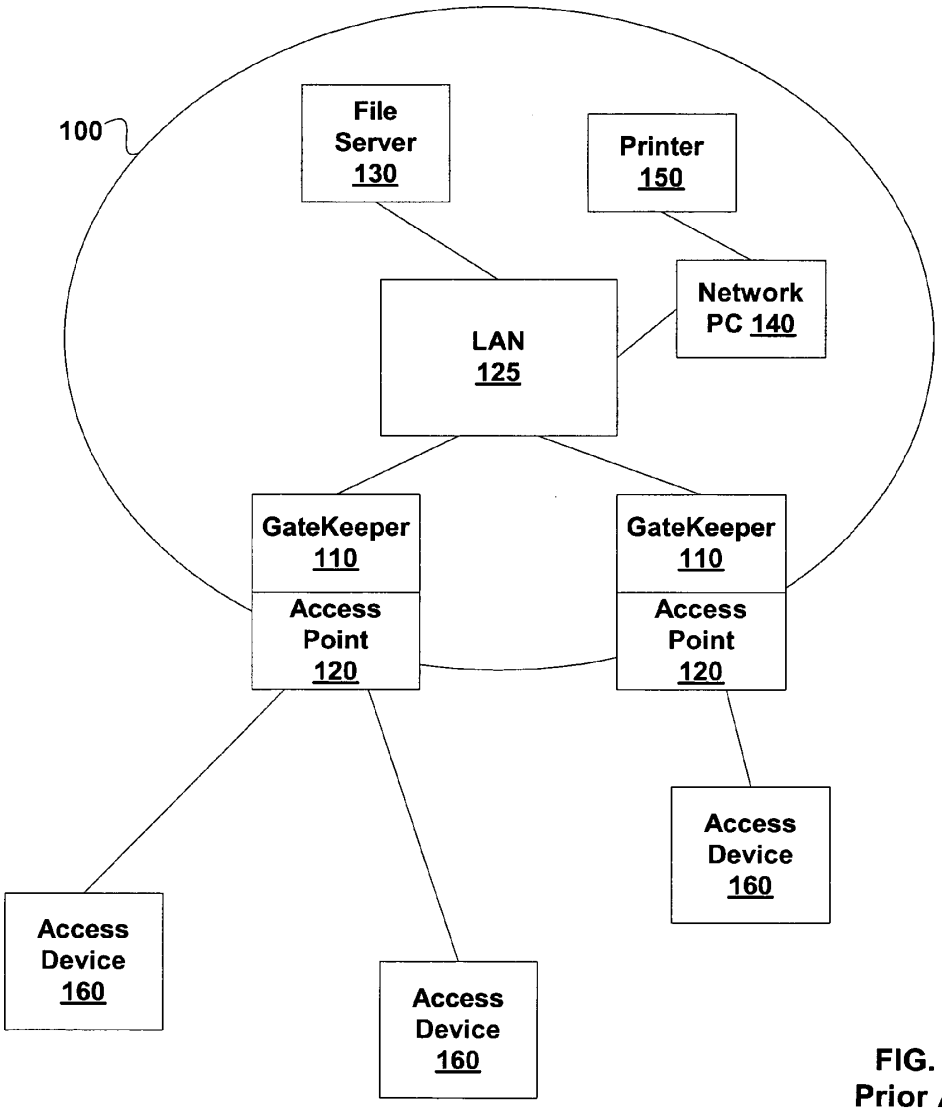

FIG. 1
Prior Art

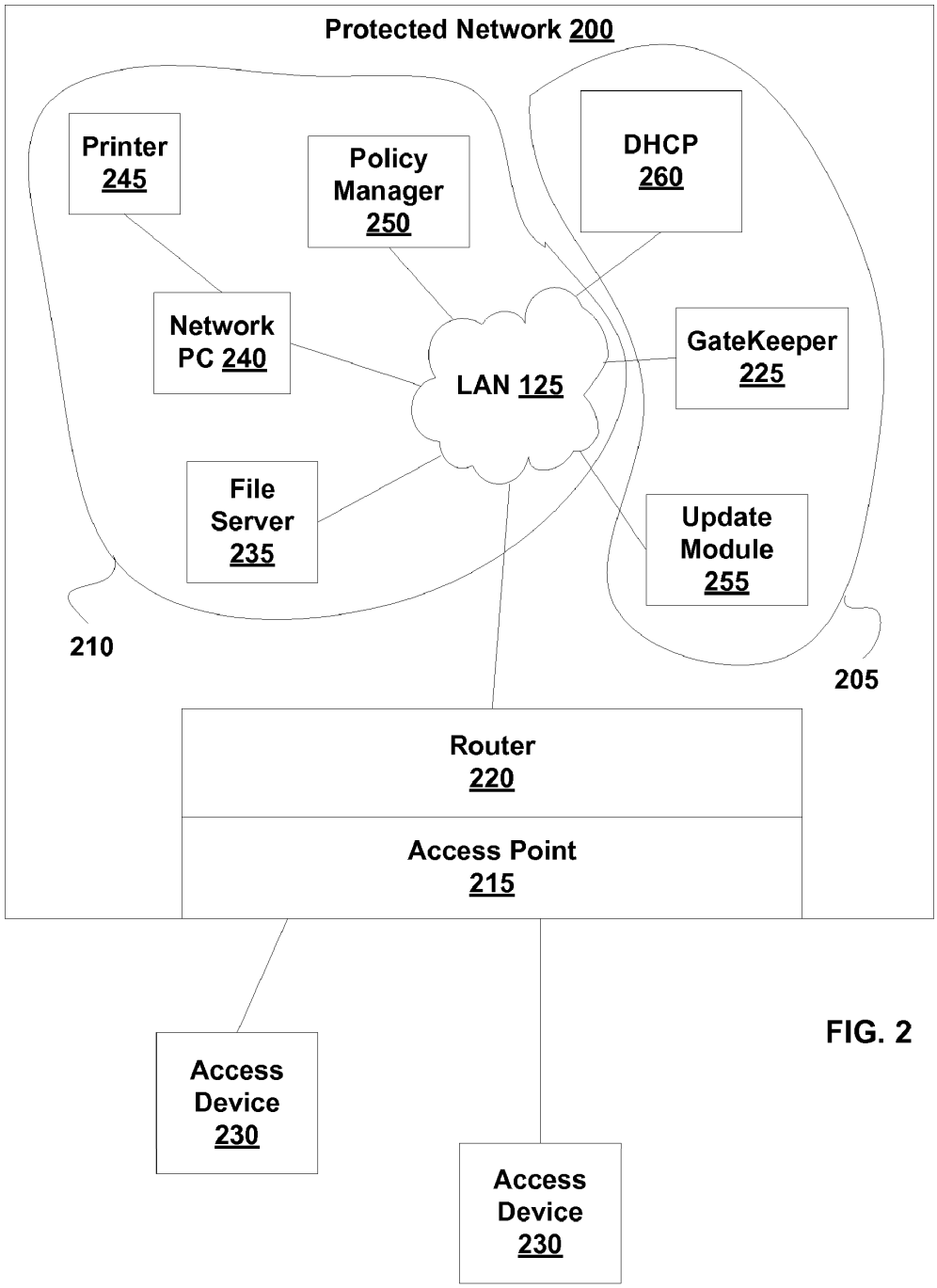
Protected Network 200
Printer 245
Policy Manager 250
DHCP 260
Network PC 240
LAN 125
GateKeeper 225
File Server 235
Update Module 255
210
205
Router 220
Access Point 215
Access Device 230
Access Device 230

FIG. 2

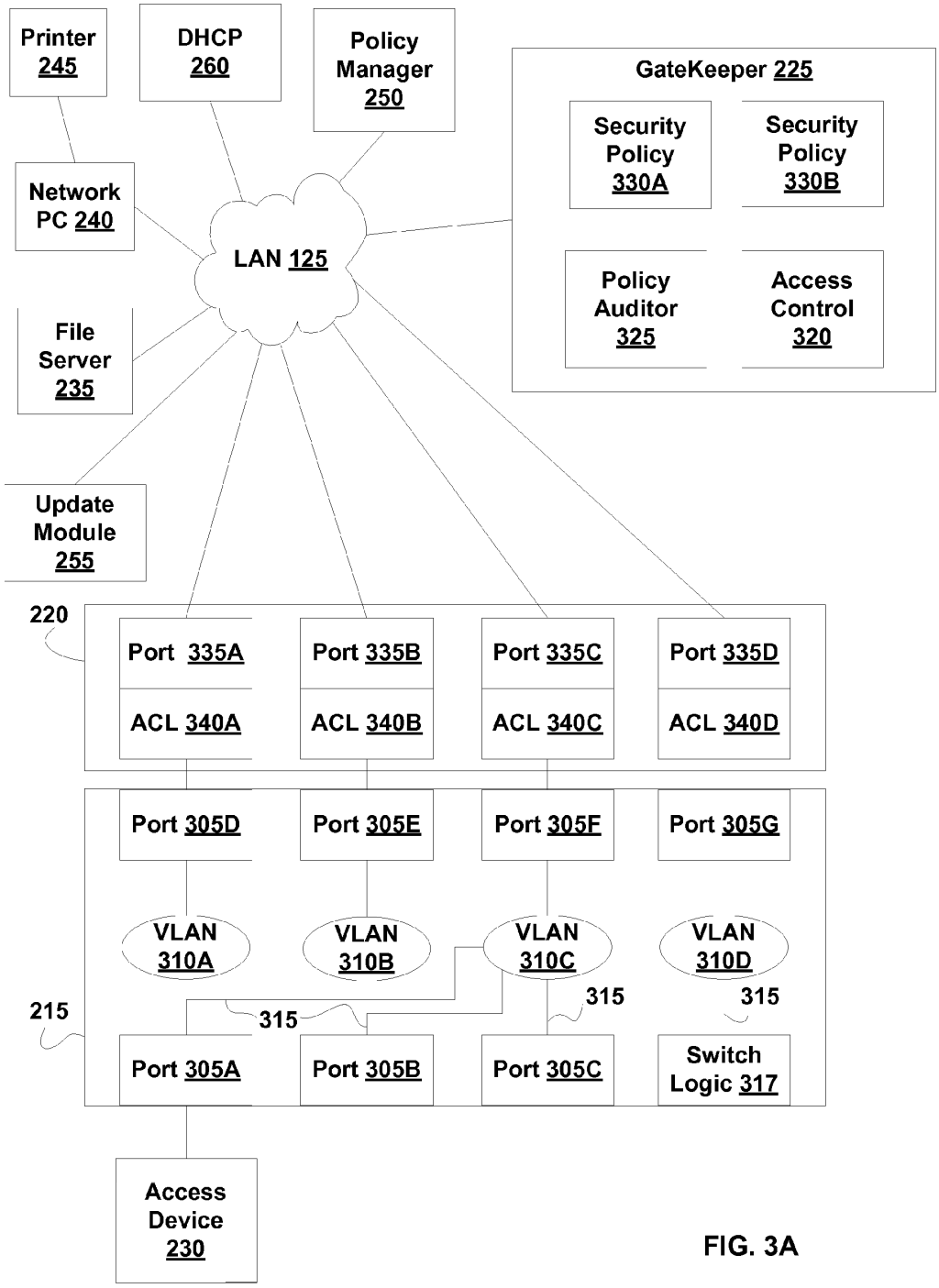
Printer 245
DHCP 260
Policy Manager 250
GateKeeper 225
Security Policy 330A
Security Policy 330B
Policy Auditor 325
Access Control 320
Network PC 240
LAN 125
File Server 235
Update Module 255
220
Port 335A
Port 335B
Port 335C
Port 335D
ACL 340A
ACL 340B
ACL 340C
ACL 340D
Port 305D
Port 305E
Port 305F
Port 305G
VLAN 310A
VLAN 310B
VLAN 310C
VLAN 310D
315
315
315
215
Port 305A
Port 305B
Port 305C
Switch Logic 317
Access Device 230

FIG. 3A

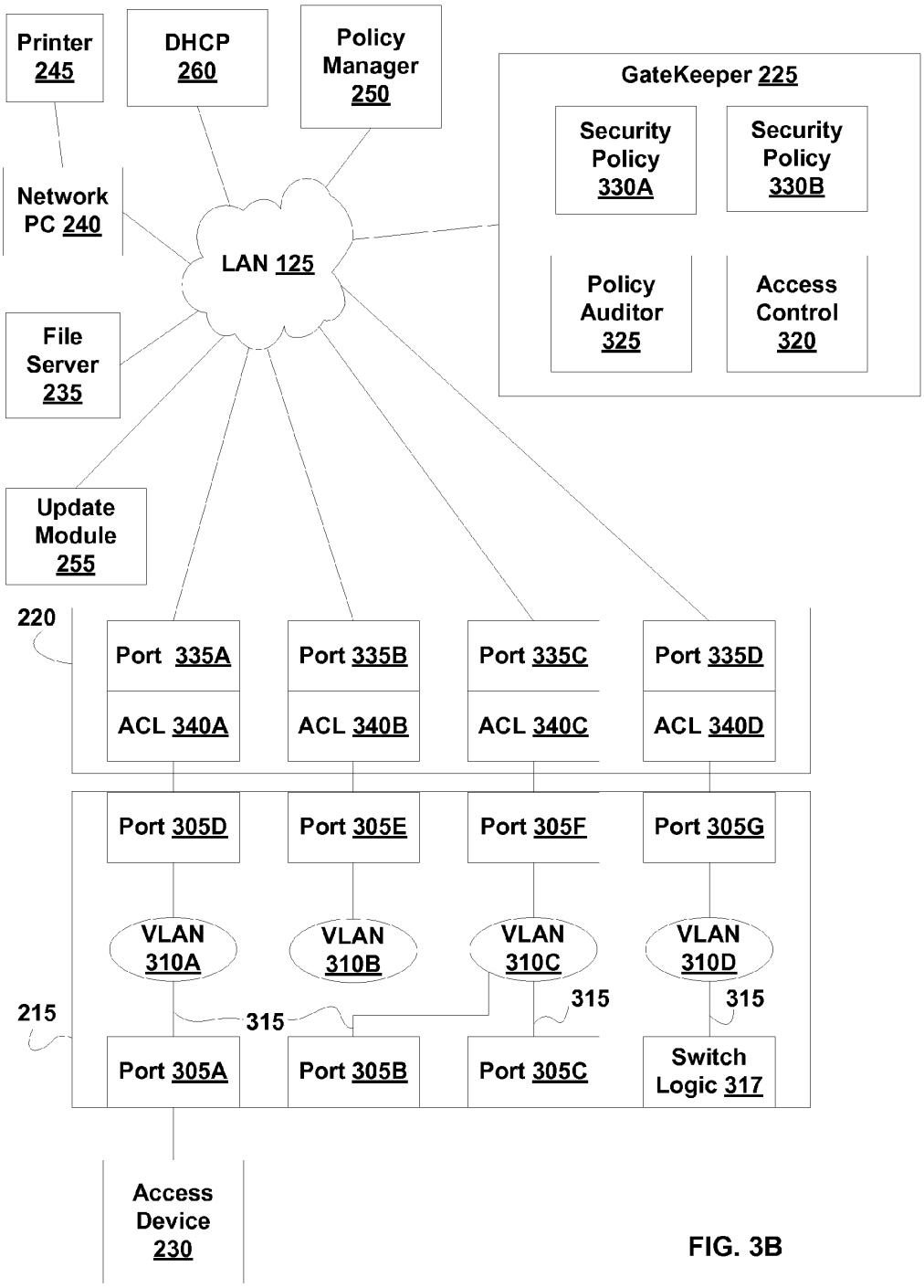
Printer 245
DHCP 260
Policy Manager 250
GateKeeper 225
Security Policy 330A
Security Policy 330B
Network PC 240
LAN 125
Policy Auditor 325
Access Control 320
File Server 235
Update Module 255
220
Port 335A
Port 335B
Port 335C
Port 335D
ACL 340A
ACL 340B
ACL 340C
ACL 340D
Port 305D
Port 305E
Port 305F
Port 305G
VLAN 310A
VLAN 310B
VLAN 310C
VLAN 310D
315
315
315
215
Port 305A
Port 305B
Port 305C
Switch Logic 317
Access Device 230

FIG. 3B

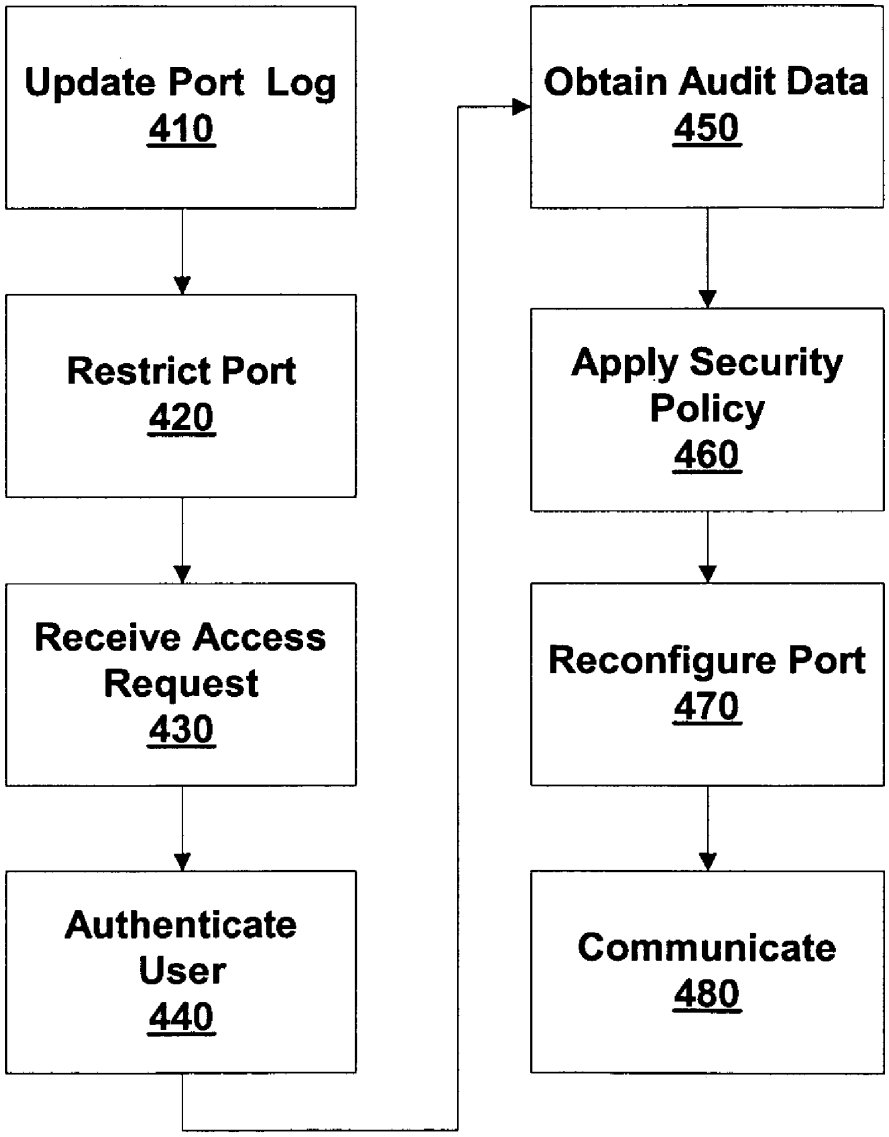
Update Port Log
410
Restrict Port
420
Receive Access Request
430
Authenticate User
440
Obtain Audit Data
450
Apply Security Policy
460
Reconfigure Port
470
Communicate
480

FIG. 4

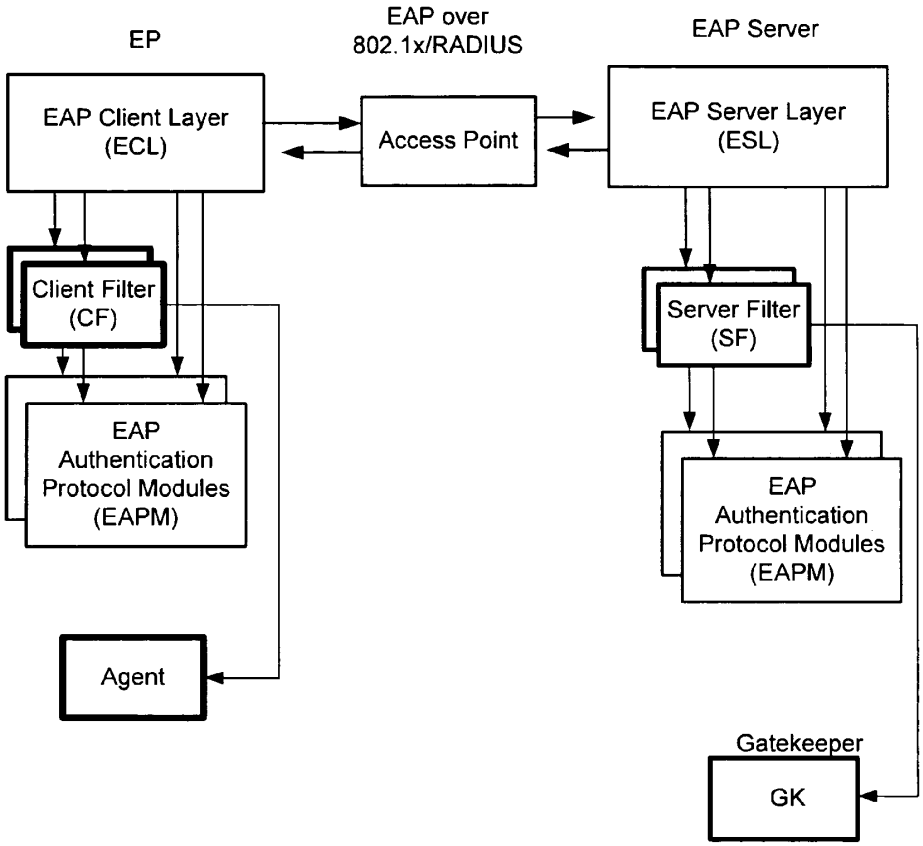
EP
EAP over
802.1x/RADIUS
EAP Server
EAP Client Layer
(ECL)
Access Point
EAP Server Layer
(ESL)
Client Filter
(CF)
Server Filter
(SF)
EAP
Authentication
Protocol Modules
(EAPM)
EAP
Authentication
Protocol Modules
(EAPM)
Agent
Gatekeeper
GK

FIG. 5

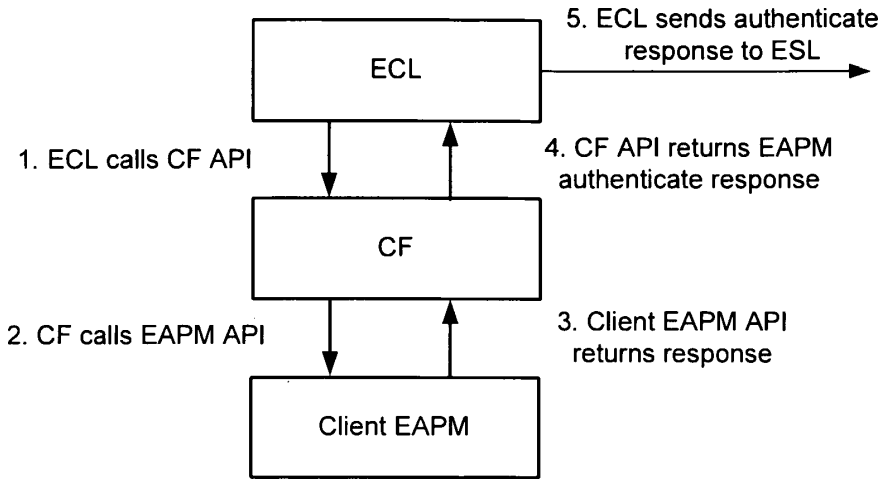
ECL
5. ECL sends authenticate response to ESL
1. ECL calls CF API
4. CF API returns EAPM authenticate response
CF
2. CF calls EAPM API
3. Client EAPM API returns response
Client EAPM

FIG. 6A

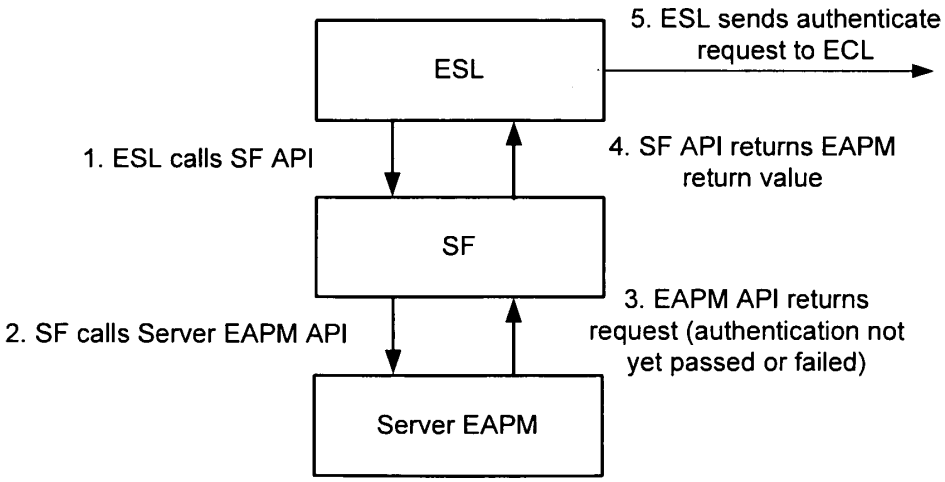
ESL
5. ESL sends authenticate request to ECL
1. ESL calls SF API
4. SF API returns EAPM return value
SF
2. SF calls Server EAPM API
3. EAPM API returns request (authentication not yet passed or failed)
Server EAPM

FIG. 6B

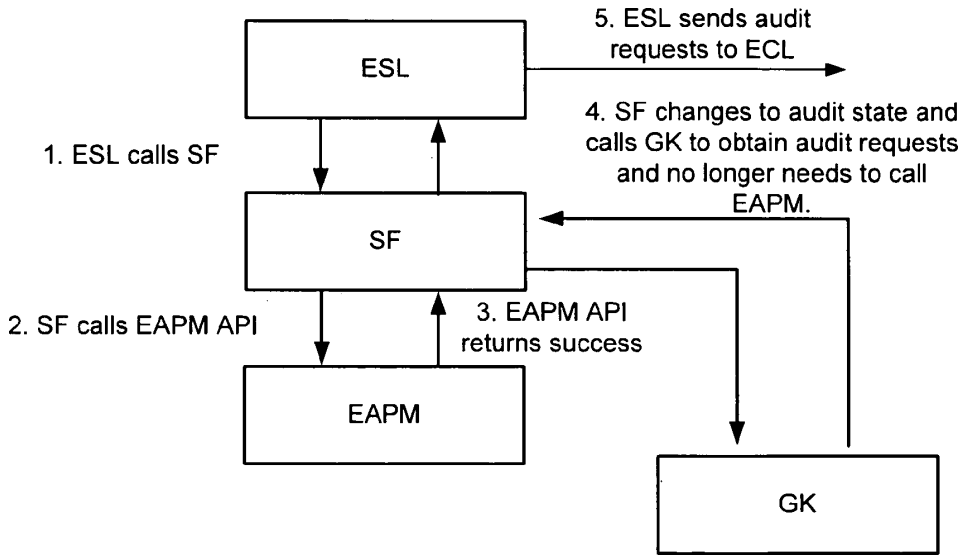
ESL
5. ESL sends audit requests to ECL
4. SF changes to audit state and calls GK to obtain audit requests and no longer needs to call EAPM.
1. ESL calls SF
SF
2. SF calls EAPM API
3. EAPM API returns success
EAPM
GK

FIG. 7

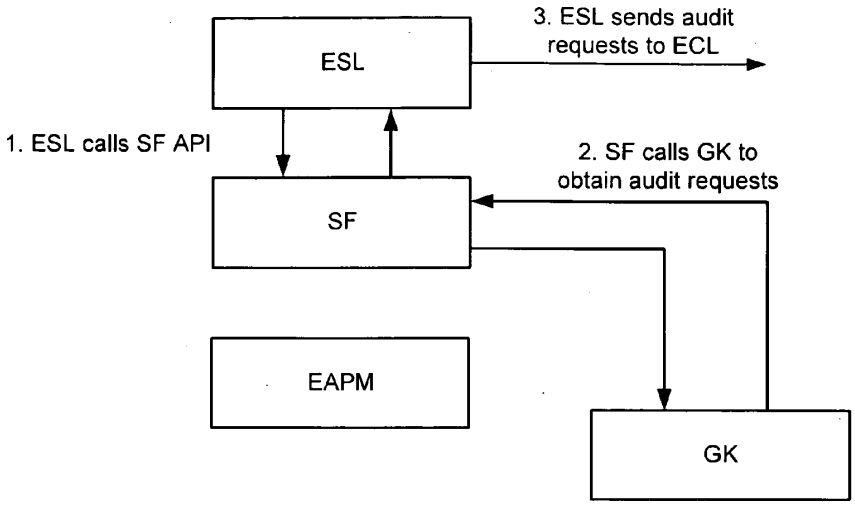
ESL
3. ESL sends audit requests to ECL
1. ESL calls SF API
2. SF calls GK to obtain audit requests
SF
EAPM
GK

FIG. 8A

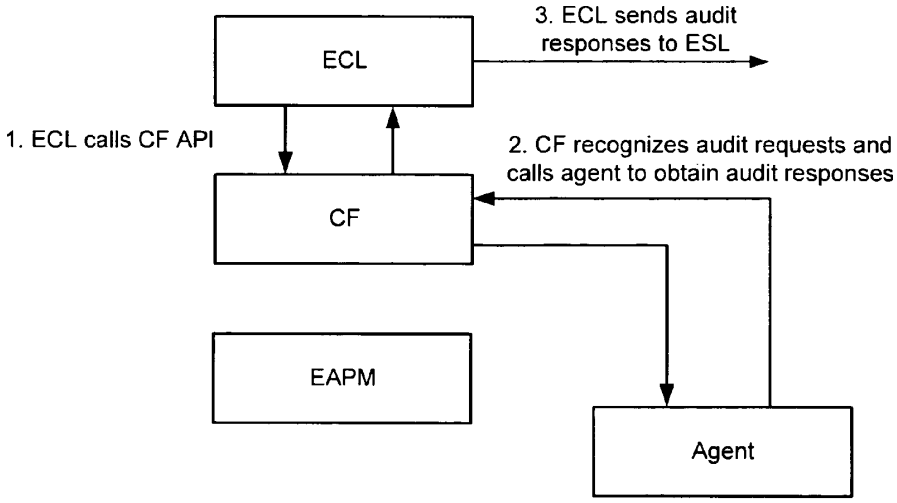
ECL
3. ECL sends audit responses to ESL
1. ECL calls CF API
2. CF recognizes audit requests and calls agent to obtain audit responses
CF
EAPM
Agent

FIG. 8B

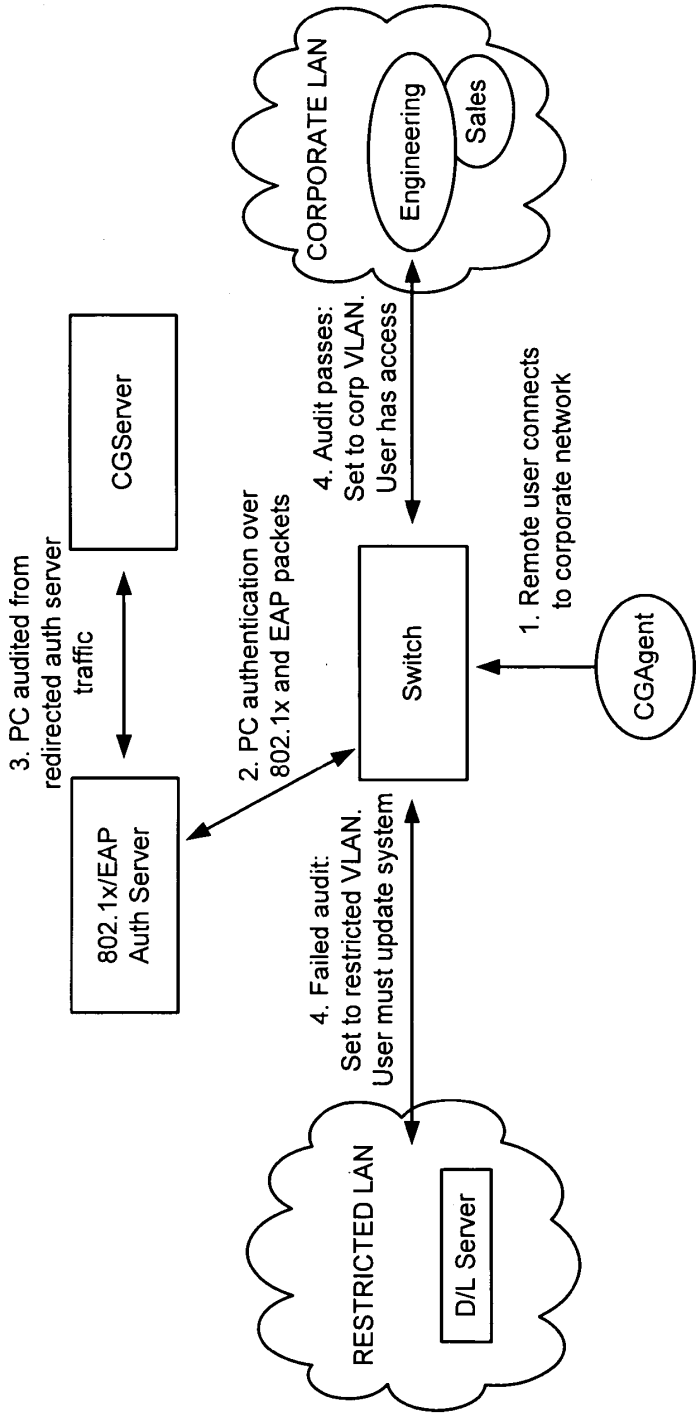
CORPORATE LAN
Engineering
Sales
4. Audit passes:
Set to corp VLAN.
User has access
CGServer
3. PC audited from
redirected auth server
traffic
2. PC authentication over
802.1x and EAP packets
Switch
1. Remote user connects
to corporate network
CGAgent
802.1x/EAP
Auth Server
4. Failed audit:
Set to restricted VLAN.
User must update system
RESTRICTED LAN
D/L Server

FIG. 9

SYSTEMS AND METHODS OF CONTROLLING NETWORK ACCESS

CROSSREFERENCE TO RELATED APPLICATIONS

This application claims benefit of U.S. Provisional Patent Application No. 60/505,582 entitled "Gatekeeper Inventions for Controlling Access to a Corporate Network" and filed Sep. 24, 2003; and of U.S. Provisional Patent Application No. 60/513,080 entitled "Gatekeeper Invention for Controlling Access to a Corporate Network Using 802.1x" and filed Oct. 21, 2003. The disclosures of these two provisional applications are incorporated herein by reference.

BACKGROUND

1. Field of the Invention

The invention is in the field of computing systems and more specifically in the field of network security.

2. Related Art

Several approaches to controlling external access to computing networks have been developed. The goals in developing these approaches include limiting access to authorized users and assuring that computing devices employed by these users do not include malicious computing code such as viruses, worms, or Trojan horses. The need for access control has grown with users' demands for accessing secure networks over the Internet and from personal devices such as laptop computers and personal digital assistants.

A first level of access control is achieved by requiring authentication of a user. This may be accomplished by requiring the user to enter a username and password or by reading a MAC address or other identifying information from an access device. In some systems, a network switch is programmed to grant access to a secure network only after proper authentication is achieved. Systems capable of using this approach include those using a proprietary VMPS protocol from Cisco Systems, Inc. of San Jose, Calif. or using a IEEE 802.1x standard protocol.

Reliance on mere user authentication includes several disadvantages. For example, there are no provisions to assure that an access device used by the authenticated user meets network security policies. The access device may have out-of-date virus software, may have security vulnerabilities, or may be otherwise compromised. Further, this approach requires that access points (e.g., network switches) support one of a specific set of access protocols. Because many access points do not support VMPS, 802.1x, or a similar protocol, implementation of this approach on a large preexisting network, such as a corporate network, may be prohibitively expensive.

A greater level of access control may be achieved by including a gatekeeper between the secure network and the access device. The gatekeeper is configured to ensure that the access device conforms to a predetermined security policy. FIG. **1** is a block diagram of a Secure Network, generally designated **100**, including two instances of a Gatekeeper **110** each associated with a different instance of an Access Point **120**. Secure Network **100** further includes, as an illustrative example, a network File Server **130**, a Network PC (personal computer) **140** and a Printer **150** included in and connected via, a local area network designated LAN **125**.

Each instance of Access Point **120** may include a large number of individual communication ports. These ports are used to connect through GateKeeper **110** to other elements within Secure Network **100** such as File Server **130** or LAN **125**. Large corporate networks may include many instances of Access Point **120**, each including hundreds of individual communication ports and being associated with an instance of GateKeeper **110**.

Some instances of Access Point **120** are capable of supporting virtual local area networks (VLANs). VLANs are generated by associating communication ports within Access Point **120** with separate virtual networks. For example, one Access Device **160** may be placed on a different VLAN than another Access Device **160** by assigning the communication ports of Access Point **120** to separate VLANs. From the point of view of these devices, the effect of a VLAN is equivalent to having a separate hardwired network.

GateKeeper **110** is configured to control access to Secure Network **100**. In addition to authenticating users who wish to access Secure Network **100** using an Access Device **160**, GateKeeper **110** is configured to ensure that Access Device **160** conforms to a predetermined security policy, before granting access to Secure Network **100**. For example, GateKeeper **110** may make certain that Access Device **160** has up-to-date virus software and encryption protocols as proscribed by the security policy. Once GateKeeper **110** has verified that Access Device **160** satisfies the security policy, Access Device **160** is allowed to communicate through GateKeeper **110** to LAN **125**.

A disadvantage of the use of GateKeeper **110**, as practiced in the prior art, is that all communications between Access Device **160** and LAN **125** pass through GateKeeper **110**. For large networks including many instances of Access Point **120**, each of which may include many communication ports, this can be a significant burden. The use of one instance of GateKeeper **110** to support numerous instances of Access Device **160** is limited by bandwidth and required sophistication (e.g., cost) of GateKeeper **110**. It is undesirable for GateKeeper **110** to become a limiting factor on the bandwidth of communication between instances of Access Device **160** and Secure Network **100**. Further, the use of a separate GateKeeper **110** for each instance of Access Device **160** or Access Point **120** is often prohibitively expensive. Even if a separate GateKeeper is used for each Access Point **120**, there is no isolation between compliant and non-compliant Access Devices **160** which are attached to the same Access Point **120**.

There is, therefore, a need for improved systems and methods of controlling access to secure networks.

SUMMARY

Systems and methods of the invention include a protected network physically or logically divided into a restricted subset and one or more less-restricted subsets. Requests from an access device for access to the less-restricted subset are first passed to the restricted subset. Elements (e.g., a gatekeeper) of the restricted subset are then used to apply security policies to the access device and if security policies are satisfied, the access device is granted access to a less-restricted subset of the protected network. The passing of access requests to the restricted subset and granting of access are accomplished by configuring and reconfiguring a communication port of an access point. After access is granted, further communication between the access device and the protected network can include access to the less restricted subset.

Typically, the less-restricted subset of the protected network and the restricted subset of the protected network are characterized by Virtual Local Area Networks (e.g., VLANs) defined within the access point and optionally by access control lists (ACL) of a router, firewall, or switch situated between the VLAN and the protected network. Different

VLANs within the same access point, or within different access points, may be configured to characterize a plurality of restricted subsets and/or a plurality of less-restricted subsets within the protected network. A communication port of the access point is configured such that network traffic directed at the protected network is initially passed through a restricted VLAN rather than through a less-restricted VLAN. The restricted VLAN allows network traffic to pass to the restricted subset of the protected network and is typically restricted in the sense that it only allows access to elements of the protected network that are configured to communicate with an access device whose security characteristics are unknown or questionable. In contrast, the less-restricted VLAN allows access to the less-restricted subset of the protected network and, in typical embodiments, to elements of both the less-restricted subset and the restricted subset. For example, the restricted VLAN allows traffic to pass to a gatekeeper configured to receive requests for access to the less-restricted VLAN, and to determine if, and to what extent, access may be allowed. To grant access, the gatekeeper sends commands to the access point in order to reconfigure a communication port to which the access device is connected. The reconfiguration typically includes reassigning the communication port from the restricted VLAN to the less-restricted VLAN.

Subsequent to reconfiguration of the communication port, network traffic can pass from the access device through the less-restricted VLAN to elements of both the less-restricted subset and (optionally) the restricted subset. This network traffic need not pass through the gatekeeper. Thus, in various embodiments of the invention a gatekeeper is used to grant access to the less-restricted subset, and after access has been granted, most network traffic does not need to pass through the gatekeeper. For example, in some embodiments, the gatekeeper only receives requests to access the less-restricted network and data regarding access to and security of the protected network. This data may be received from administrators, access devices, access points, routers, and/or other devices on the network. These limited communications with gatekeeper occur both before and after reconfiguration of the communication port, and eliminate a significant disadvantage associated with the use of prior art gatekeepers.

Various embodiments of the invention include a computing network comprising a less-restricted subset of the computing network, access to the less-restricted subset being responsive to a first VLAN, a restricted subset of the computing network including a gatekeeper, the gatekeeper configured to receive requests for access to the less-restricted subset from an access device and to issue commands configured to allow access to the less-restricted subset, access to the restricted subset of the computing network being responsive to a second VLAN, and at least one access point including a communication port configurable for communication with the less-restricted subset or alternatively for communication with only the restricted subset, configuration of the communication port including association of the communication port alternatively with the first VLAN or the second VLAN, configuration of the communication port being responsive to the commands issued by the gatekeeper. Other elements are optional.

Various embodiments of the invention include a network gatekeeper comprising at least one security policy including requirements that must be satisfied before an access device is granted access to a less-restricted subset of a protected network, a policy auditor configured to audit an access device using the at least one security policy, in response to a request to access the less-restricted subset of the protected network, the request being sent from the access device to the gatekeeper via a communication device, and an access control configured to reconfigure the communication device such that data sent from the access device can be received by the less-restricted subset of the protected network rather than merely a restricted subset of the protected network, if the audit results in a determination that the access device meets the requirements of the at least one security policy, the restricted subset of the protected network including the gatekeeper. Other elements are optional.

Various embodiments of the invention include a method of granting access to a protected network, the method comprising receiving a request for access to a less-restricted subset of the protected network from an access device external to the protected network, the request being received through a communication port of an access point, the communication port configured for communicating between the access device and a restricted subset of the protected network, the restricted subset including a gatekeeper, applying a security policy to the access device, responsive to the request, and reconfiguring the communication port for communicating between the access device and the less-restricted subset of the protected network, if requirements of the security policy are satisfied. Other steps are optional.

Various embodiments of the invention include a method of granting access to a protected network, the method comprising receiving a first communication from an access device at a communication port, the communication port being configured to pass the first communication to a restricted subset of the protected network, the restricted subset including a gatekeeper configured to enforce security policy for access to a less-restricted subset of the protected network, receiving a command from the gatekeeper, the command being responsive to the received first communication and being configured to reconfigure the communication port to communicate data to the less-restricted subset of the protected network, configuring the communication port to communicate data to the less-restricted subset of the protected network rather than merely the restricted subset of the protected network, responsive to the received command, and receiving a second communication from the access device at the communication port, the communication port now being configured to pass the second communication to the less-restricted subset of the protected network. Other steps are optional.

Various embodiments of the invention include a computing network comprising means for dividing the computing network into a restricted subset and a less-restricted subset, means for receiving a request at the restricted subset, the request being to access the less-restricted subset, means for enforcing a security policy in response to the request, and means for allowing communication to the less-restricted subset, responsive to the enforcement of the security policy, the communication to the less-restricted subset not necessarily passing through the restricted subset. Other elements are optional.

In various embodiments of the invention the restricted subset of a computing network includes elements configured to communicate with access devices having an unknown or questionable security status, and the less-restricted subset of the computing network includes those elements of the computing network not included in the restricted subset.

BRIEF DESCRIPTIONS OF THE VARIOUS VIEWS OF THE DRAWING

FIG. **1** is a block diagram of a prior art computing network;

FIG. **2** is a block diagram of a protected network, according to various embodiments of the invention;

FIG. **3**A is a block diagram showing further details of an access point, router and gatekeeper of FIG. **2**, according to various embodiments of the invention;

FIG. **3**B is a block diagram showing further details of the access point, router and gatekeeper of FIG. **2**, after access has been granted to a less-restricted subset of a protected network, according to various embodiments of the invention; and

FIG. **4** is a flowchart illustrating a method of granting access to a protected network, according to various embodiments of the invention.

FIG. **5** is a block diagram showing EAP over 802.1x/Radius.

FIG. **6**A is a block diagram showing a client in authentication state.

FIG. **6**B is a block diagram showing a server in authentication state.

FIG. **7** is a block diagram showing a server changing to audit state.

FIG. **8**A is a block diagram showing a server in audit state.

FIG. **8**B is a block diagram showing a client responding to audit requests.

FIG. **9** is a block diagram showing a system in 802.1x mode where normal traffic does not traverse CGS.

DETAILED DESCRIPTION

Access to a protected computing network is controlled by manipulating a communication port within an access point. When an access request is first received, the communication port is configured to pass the request to a restricted subset of a protected computing network. This restricted subset includes a gatekeeper configured to administer a security policy governing access to those parts of the protected computing network that are not part of the restricted subset. Those parts of the protected computing network that are not part of the restricted network are considered to be in a less-restricted subset. The less-restricted subset being less restricted relative to the restricted subset in terms of what elements may be included in each subset. If the device requesting access satisfies requirements of the security policy, then the gatekeeper sends commands to the access point in order to reconfigure the communication port through which the access request was received. The communication port is reconfigured such that further communication from the access device is passed to the less-restricted subset as well as, optionally, the restricted subset. In some embodiments, the less-restricted subset and the restricted subset are characterized by VLANs defined within the protected network.

FIG. **2** is a block diagram of a Protected Network **200**, according to various embodiments of the invention. Protected Network **200** is either physically or logically divided into a Restricted Subset **205** and a Less-Restricted Subset **210**. Access to Protected Network **200** is possible through an Access Point **215** (a communication device) and an optional Router **220**. As is described further herein this access is under the control of a GateKeeper **225**. GateKeeper **225** is configured to enforce a security policy against one or more Access Device **230** requesting access to Less-Restricted Subset **210**. Typically, Less-Restricted Subset **210** and Restricted Subset **205** are characterized by VLAN settings within Access Point **215**. Access Device **230** and Access Point **215** are connected by a communication channel such as a cable, the Internet, a telephone network, other computing network, and/or the like. In some embodiments, a network access server (not shown) is included between Access Device **230** and Access Point **215**.

In various embodiments, Protected Network **200** includes a corporate network, telephone network, private network, local area network, wide area network, wireless network, communication network, government network, university network, and/or the like. Restricted Subset **205** is a subset of Protected Network **200** including at least GateKeeper **225**. In some embodiments, Restricted Subset **205** further includes a DHCP (dynamic host configuration protocol service) **260** configured to assign and manage network addresses, and/or an Update Module **255** configured for providing security updates to Access Device **230**. For example, in one embodiment, Restricted Subset **205** includes a server configured to function as DHCP **260** and a server configured to function as GateKeeper **225**. In one embodiment, Restricted Subset **205** includes a single computing device configured to function as both Update Module **255** and GateKeeper **225**.

Less-Restricted Subset **210** includes those elements of Protected Network **200** not included in Restricted Subset **205**. Less-Restricted Subset **210** optionally includes devices such as a File-Server **235**, a Network PC **240**, a Printer **245**, or the like. In some embodiments, Protected Network **200** includes elements having a hierarchy of access restrictions. For example, access to Network PC **240** may require a higher level of authority than access to File Server **235**. In this case, as described further herein, access control lists within Router **220** are optionally used to independently control access to specific devices within Less-Restricted Subset **210**. Protected Network **200** maybe large, including tens, hundreds, or thousands of devices. The hierarchy of access restrictions may be enforced by a hierarchical set of security policies defined using Policy Manager **250**. In various embodiments, Router **220** and Access Point **215** may be considered part of Restricted Subset **205** or Less-Restricted Subset **210**.

GateKeeper **225** is configured to enforce one or more security policies against an instance of Access Device **230** attempting to access Protected Network **200**. The security polices may include requirements for user identification such as user names and passwords, configuration requirements relating to the configuration of Access Device **230**, application requirements relating to applications running on Access Device **230**, or the like. For example, in one embodiment GateKeeper **225** is configured to enforce a security policy that requires a user of Access Device **230** to provide a username and password, requires Access Device **230** to be running an operating system with specific security patches installed, requires that Access Device **230** not be connected to any insecure devices, and requires that Access Device **230** have current antivirus software installed.

In some embodiments, GateKeeper **225** is configured to enforce several alternative security policies having different levels of requirements, and to determine which security policy to enforce based on the identity of Access Device **230**, the identity of a user of Access Device **230**, those elements of Less-Restricted Subset **210** to which access is requested, and/or the like. For example, a request to access File Server **235** may have to satisfy a security policy that includes scanning Access Device **230** for malicious code, while a request to access Printer **245** may have to satisfy a security policy that includes establishing a user identity. Security policies may be stored on GateKeeper **225**, on Policy Manager **250**, or elsewhere accessible to Restricted Subset **205**.

In some embodiments, a single instance of GateKeeper **225** is configured to manage access through more than one Access Point **215** and/or to manage access to more than one Protected Network **200**. As is described further herein, management of Access Point **215** is accomplished by configuring and reconfiguring one or more communication ports within Access

Point **215**, and optionally setting access control lists within Router **220**. In some embodiments Protected Network **200** includes a plurality of Access Point **215**, a plurality of GateKeeper **225** and/or a plurality of Restricted Subset **205**. Further details of GateKeeper **225** and Access Point **215** are discussed below.

Access Device **230** is a computing device configured to operate as an end point (EP) in a communication channel including Access Point **215** and Access Device **230**. In various embodiments, Access Device **230** is a personal computer, a personal digital assistant, a telephone, a wireless device, a communication device such as a router, Ethernet card, wireless card, another access point, a network device, or the like. Access Device **230** is optionally identified by a MAC address, by a cookie, by data stored on Access Device **230**, by a user name, an IP address, a network address, or the like.

In some embodiments, Access Device **230** is configured to execute a software and/or hardware agent for communicating with GateKeeper **225**. For example, in one embodiment, Access Device **230** includes an agent configured to monitor code running on Access Device **230** and report any suspicious code to GateKeeper **225**. In another example, Access Device **230** may include software and/or hardware configured to monitor other devices connected to Access Device **230** and to report information about these devices (e.g., their security statuses or MAC addresses) to GateKeeper **225**.

Policy Manager **250** is configured to centrally create, update, and distribute security policies enforced by one or more GateKeeper **225**. For example, in various embodiments, Policy Manager **250** is configured to manage passwords, to specify access privileges, to specify requirements of security policies, or the like. In some embodiments, Policy Manager **250** is configured to establish several security policies and to specify conditions under which each of the security policies should be used. For example, a security policy may be selected for use responsive to a device type of Access Device **230** and/or the elements of Protected Network **200** to which access has been requested.

Update Module **255** is configured for remotely modifying Access Device **230**, or a device connected to Access Device **230**, in order to improve compliance with a security policy. For example, if it is found that Access Device **230** includes out-of-date antivirus software, then Update Module **255** may facilitate updating of the antivirus software on Access Device **230**. In some embodiments, Update Module **255** is configured to update an agent executing on Access Device **230**. Update Module **255** is optionally included in Less-Restricted Subset **210** or external to Protected Network **200**. Update Module **255** optionally operates responsive to a security policy and/or to GateKeeper **225**.

FIG. **3**A is a block diagram showing further details of Access Point **215**, Router **220** and GateKeeper **225**, according to various embodiments of the invention. Access Point **215** is, for example, a network switch, a wireless access point, a remote access virtual private network (VPN), secure socket layer VPN, firewall, or the like. When embodied in a network switch, Access Point **215** includes a series of communication ports, designated Ports **305**A-**305**G and configured for communication with devices such as Access Device **230**, Router **220**, Less-Restricted Subset **210** and/or Restricted Subset **205**.

Communication received at one member of Ports **305**A-**305**G is directed internally to another member of Ports **305**A-**305**G via a member of VLANs **310**A-**310**D. VLANs **310**A-**310**D are logical associations between members of Ports **305**A-**305**G. Typically, any members of Ports **305**A-**305**G that are configured to be associated with the same member of VLANs **310**A-**310**D are in bi-directional communication with each other. These associations are illustrated in FIGS. **3**A and **3**B by Lines **315**. For example, with Ports **305**A-**305**G configured as shown in FIG. **3**A, communication from Access Device **230** and received at Port **305**A is directed to Port **305**F because Port **305**A and Port **305**F are both associated with VLAN **310**C. (In some embodiments of Access Point **215**, a member of VLANs **310**A-**310**D may be configured such that some members of Ports **305**A-**305**G, even if associated with the same VLAN, are hidden from each other. For example, in these embodiments, both Ports **305**A and **305**B may be in communication with Port **305**F but not with each other.)

The associations between members of Ports **305**A-**305**G and VLANs **310**A-**310**D are controlled by Switch Logic **317** which is accessible to other devices, for example through Port **305**G. Switch Logic **317** is configured for configuring and reconfiguring members of Ports **305**A-**305**G responsive to received commands. For example, by receiving an appropriate command, Switch Logic **317** is configured to reconfigure Port **305**A to be associated with VLAN **310**A, as illustrated in FIG. **3**B below. In this configuration, data received at Port **305**A is directed to Port **305**D via VLAN **310**A, rather than to Port **305**F.

As is discussed further below, the commands received by Switch Logic **317** may be generated by GateKeeper **225**. This communication between GateKeeper **225** and Switch Logic **317** may be accomplished using SNMP (Simple Network Management Protocol), telnet, SSH (Secure Shell), RADIUS (Remote Authentication User Dial-In Service), EAP (Extensible Authentication Protocol), or the like.

In some embodiments, Switch Logic **317** includes a memory (not shown) configured to store the status of Ports **305**A-**305**G and/or identification data regarding Access Device **230**. This identification data may include, for example, MAC addresses, IP (internet protocol) addresses, or other data that may be used to identify Access Device **230** or data sent by Access Device **230**.

Data passed through members of Ports **305**D-**305**G are received by Router **220** and may be communicated to other elements of Protected Network **200** responsive to access control lists (ACL **340**A-**340**D) associated with Ports **335**A-**335**D of Router **220**. ACL **340**A through **340**D are each communication filters that deny or allow communication to be passed to specific elements or sets of elements within Protected Network **200**. For example, ACL **340**C may be an access control list that specifically allows communication to network addresses used by GateKeeper **225** and DHCP **260**, and blocks communication to all other network addresses. In this case, communication through Port **335**C of Router **220** would only be allowed to reach these elements of Restricted Subset **205** and would not be allowed to reach elements of Less-Restricted Subset **210**.

ACL **340**A-**340**D of Router **220** may be used to limit communication from Access Device **230** to specific elements of Protected Network **200**. For example, in the embodiments illustrated by FIG. **3**A, if ACL **340**C is configured to restrict communication to Restricted Subset **205**, and Ports **305**A-**305**C are associated with VLAN **310**C as indicated by Lines **315**, then communication via these members of Ports **305**A-**305**G will be restricted to Restricted Subset **205**. In typical embodiments, at least one member of ACL **340**A-**340**D is configured to allow communication to Restricted Subset **205** but not to Less-Restricted Subset **210**. As is discussed further herein, by reconfiguring a member of Ports **305**A-**305**C to be associated with a different member of VLANs **310**A-**310**D, not subject to the filtering of ACL **340**C, communications from Access Device **230** can be directed to elements within

Less-Restricted Subset **210**, and optionally Restricted Subset **205**, rather than merely to Restricted Subset **205**.

When Access Point **215** is embodied in a wireless access point, some or all of Ports **305**A-**305**G may be wireless connections rather than physical ports. In these embodiments, Lines **315** may represent logical associations used to control data flow between wireless connections to Access Point **215** and/or members of Ports **305**A-**305**G that are physical communication ports. For example, in some embodiments, MAC addresses are used to distinguish wireless communications from different instances of Access Device **230** and the logical associations (represented by Lines **315**) are used to direct these communications to various output channels. The output channels may be other wireless connections or physical members of Ports **305**A-**305**G. These logical associations may be altered by Switch Logic **317** just as associations with members of VLANs **310**A-**310**D are modified. Therefore, the teachings herein that use a network switch as an example of Access Point **215**, apply equally to wireless access points.

Switch Logic **317** is controlled by an Access Control **320** included in GateKeeper **225**. Access Control **320** is configured to send commands to Switch Logic **317** in order to reconfigure members of Ports **305**A-**305**G. This reconfiguration includes modifying the association of members of Ports **305**A-**305**G with different members of VLANs **310**A-**310**D. In some embodiments, as described further herein, Access Control **320** is also configured to read a status of members of Ports **305**A-**305**G and/or device identification data from Switch Logic **317**.

Access Control **320** is responsive to a Policy Auditor **325** included in GateKeeper **225**. Policy Auditor **325** is configured to receive a request for access to Less-Restricted Subset **210** from Access Device **230**, to determine which of Security Policy **330**A or optional Security Policy **330**B applies to the current request, to perform a security audit of Access Device **230** based on the appropriate member of Security Policies **330**A-**330**B, and to notify Access Control **320** if the audit is passed. This notice typically causes Access Control **320** to reconfigure a member of Ports **305**A-**305**G using Switch Logic **317**. For example, in some embodiments, if Security Policy **330**A applies and if Access Device **230** satisfies requirements of Security Policy **330**A, then Policy Auditor **325** provides a notice to Access Control **320**. In response, Access Control **320** sends appropriate commands to Switch Logic **317**. These commands cause changes in Port **305**A, such that communication from Access Device **230** is no longer blocked by ACL **340**C and can now be received by elements of Less-restricted Subset **310**. In alternative embodiments, Security Policies **330**A-**330**B are stored elsewhere in Protected Network **200** accessible to Policy Auditor **325**. Restricted Subset **205** optionally includes one, two, or more security policy, such as Security Policies **330**A-**330**B.

FIG. **3**B is a block diagram showing further details of Access Point **215**, Router **220** and GateKeeper **225** of FIG. **2**, after access has been granted to elements of Less-Restricted Subset **210**, according to various embodiments of the invention. Port **305**A has been reconfigured to be associated with VLAN **310**A rather than VLAN **310**C. Because VLAN **310**A is communicatively coupled to Port **305**D and Port **335**A (of Router **220**) via ACL **340**A, any communication received at Port **305**A from Access Device **230** is now subject to the filtering effects of ACL **340**A rather than ACL **340**C. If ACL **340**A allows communication to network addresses associated with one or more elements of Less-Restricted Subset **210**, the above reconfiguration of Port **305**A results in a granting of access to Less-Restricted Subset **210** from Access Device **230**. In some embodiments, if ACL **340**A is configured to allow access to members of Less-Restricted Subset **210** it is also configured to allow access to members of Restricted Subset **205**. Once Port **305**A has been reconfigured to be associated with VLAN **310**A, future general network traffic between Access Device **230** and Less-Restricted Subset **210** may pass through Ports **305**A, **305**D and **335**A without passing through GateKeeper **225** or other elements of Restricted Subset **205**. Further, communication related to access to security of Protected Network **200** may still be received by GateKeeper **225** via Port **305**A. For example, GateKeeper **225** may still receive control traffic such as DNS lookups or DHCP requests, or requests to access additional elements of Protected Network **200**, or requests to continue to access the Less-Restricted Subset **210**.

In some embodiments, members of VLAN **310**A-**310**D and ACL **340**A-**340**D are optionally used to grant or bar access to different subsets of Protected Network **200**, Less-Restricted Subset **210**, or Restricted Subset **205**. For example, ACL **340**B may be configured to grant access to File Server **235**, Policy Manager **250** and GateKeeper **225**. In this case, associating a member of Ports **305**A-**305**C with VLAN **310**B may provide access to these devices from an instance of Access Device **230**. Granting of access to a specific region of Less-Restricted Subset **210** is optionally responsive to which member of Security Policies **330**A-**330**B has been satisfied.

FIG. **4** is a flowchart illustrating a method of granting access to Less-Restricted Subset **210** (FIG. **2**), according to various embodiments of the invention. In these embodiments, an Update Port Log Step **410** and a Restrict Port Step **420** are used to prepare an open (unused) communication port on Access Point **215** for receiving a request for access to Less-Restricted Subset **210**. This request is received from Access Device **230** in a Receive Access Request Step **430**. In response, GateKeeper **225** authenticates a user, obtains audit data, and applies a security policy in an Authenticate User Step **440**, an Obtain Audit Data Step **450** and an Apply Security Policy Step **460**, respectively. If the security policy is satisfied, then in a Reconfigure Port Step **470**, GateKeeper **225** reconfigures the communication port of Access Point **215** to which Access Device **230** has connected. Finally, the reconfigured communication port is used to pass communication between Access Device **230** and one or more element of Less-Restricted Subset **210** in a Communicate Step **480**. Further details of these steps are discussed herein.

In Update Port Log Step **410**, Access Control **320** reads port configuration data from Access Point **215** to determine the current configuration of Ports **305**A-**305**G. If any of Ports **305**A-**305**G have been configured by an administrator of Access Point **215**, then in Update Port Log Step **410** the administrator specified configuration(s) are stored for later use during Reconfigure Port Step **470**. Typically, the read configuration data is stored in a port configuration table, for example within GateKeeper **225**. Update Port Log Step **410** is optional, as discussed further herein.

In Restrict Port Step **420**, Access Control **320** configures those members of Ports **305**A-**305**G that may be accessed by external devices, such as Access Device **230**. These communication ports are configured to be associated with VLAN **310**C such that any data (e.g., communications) they receive from external devices are directed to Port **305**F and, thus, to subject to ACL **340**C. ACL **340**C is configured to allow communication to, for example, DHCP **260** and GateKeeper **225**. As a result, any requests for access received from external devices are prevented from reaching Less-Restricted Subset **210** and instead are received by elements of Restricted Subset **205**. Restrict Port Step **420** results in a configuration such as that illustrated in FIG. **3**A. In this configuration, those mem-

bers of Ports **305**A-**305**G that may be accessed by external devices include Port **305**A, Port **305**B and Port **305**C. As a result of Restrict Port Step **420**, these members of Ports **305**A-**305**G are associated with VLAN **310**C and communicatively coupled to Protected Network **200** through ACL **340**C. Restrict Port Step **420** is optional, for example when members of Ports **305**A-**305**C have been configured to communicate data to elements of Restricted Subset **205** by an administrator of Access Point **215**.

In Receive Access Request Step **430**, a request for access to Less-Restricted Subset **210** is received at one of Ports **305**A-**305**C configured to pass data to DHCP **260** and Gatekeeper **225**. Typically, this request is received from an external device such as Access Device **230**. Because Port **305**A, Port **305**B and Port **305**C are configured to pass data to DHCP **260** and Gatekeeper **225**, the received access request passes through Access Point **215** and is received by either DHCP **260** or Gatekeeper **225** In typical embodiments, an initial access request is first acknowledged by DHCP **260** which assigns a dynamic network address (e.g., IP address) to Access Device **230** and returns, to Access Device **230**, a network address associated with GateKeeper **225** or more specifically Policy Auditor **325**. Using this network address, Access Device **230** may engage in further communication with GateKeeper **225** or Policy Auditor **325**. In some embodiments, DHCP **260** and instances of GateKeeper **225** are associated with a local domain name service configured to provide network addresses associated with a particular instance of GateKeeper **225** configured to manage (reconfigure) the particular Access Point **215** to which Access Device **230** is connected.

In optional Authenticate User Step **440**, Policy Auditor **325** authenticates the identity of Access Device **230** and/or a user of Access Device **230**. This authentication may be required by a member of Security Policies **330**A-**330**B. In various embodiments, the authentication may include receipt of a user name and password, receipt of a MAC address, reading of data stored on Access Device **230**, communication with an agent executing on Access Device **230**, or the like.

In optional Obtain Audit Data Step **450**, Policy Auditor **325** collects further data to perform a security audit of Access Device **230** responsive to Security Policy **330**A or Security Policy **330**B. In some embodiments, Obtain Audit Data Step **450** includes sending system data requests to Access Device **230**, Router **220**, or Access Point **215**. The requested system data may include, for example, operating system status (version, updates, etc.), antivirus software status, information concerning devices connected to Access Device **230**, Windows registry information, MAC address, IP addresses, cookies, status of applications executing on Access Device **230**, or the like.

In some embodiments, Obtain Audit Data Step **450** is facilitated by an agent running on Access Device **230**. For example, Access Device **230** may include a software agent configured to monitor local security and to report results of this monitoring to Policy Auditor **325**.

In Apply Security Policy Step **460**, a security audit of Access Device **230** is performed by Policy Auditor **325** responsive to a member of Security Policy **330**A or Security Policy **330**B. The particular member of Security Policy **330**A or Security Policy **330**B used to perform the audit may be responsive to the identity of Access Device **230**, an identity of a user of Access Device **230**, a part of Less-Restricted Subset **210** to which access is requested, or the like. The security audit typically includes determining if Access Device **230** satisfies requirements of the security policy. The security audit optionally includes active probing, scanning, and/or collection of third party data regarding Access Device **230**. In some embodiments, Authenticate User Step **440** is considered part of the security policy audit.

As is discussed further herein, in some embodiments, satisfaction of all the requirements of a particular security policy results in access to Less-Restricted Subset **210**, while satisfaction of a subset of the requirements associated with the particular security policy is considered partial satisfaction of the security policy and may result in a more limited access to Less-Restricted Subset **210**.

In some embodiments, Apply Security Policy Step **460** includes using Update Module **255** (FIG. **2**) to overcome deficiencies in the security of Access Device **230**. For example, in one embodiment, Apply Security Policy Step **460** includes updating antivirus software on Access Device **230** in response to a security audit that determined that the current antivirus software is out-of-date.

In Reconfigure Port Step **470**, the communication port of Access Point **215**, to which Access Device **230** is communicatively connected, is reconfigured responsive to a successful security audit in Apply Security Policy Step **460**. This communication port is reconfigured such that data received by the communication port is passed to one or more elements of Less-Restricted Subset **210** rather than merely elements of Restricted Subset **205** (e.g., GateKeeper **225**). For example, FIG. **3**A shows Port **305**A prior to execution of Reconfigure Port Step **470** and FIG. **3**B shows Port **305**A following execution of Reconfigure Port Step **470**. In FIG. **3**B, Port **305**A is associated with VLAN **310**A and, thus, communicatively coupled through Port **305**D to Protected Network **200** subject to the restrictions of ACL **340**A. The restrictions of ACL **340**A allow access to all or part of Less-Restricted Subset **210**, as well as optionally all or part of Restricted Subset **205**.

In typical embodiments, reconfiguration of Port **305**A is accomplished by sending commands from Access Control **320** to Switch Logic **317**. These commands or responses to requests from Switch Logic **317** are optionally sent via SNMP, telnet, SSH, RADIUS, EAP, or the like, and are responsive to data received in Authenticate User Step **440** and Obtain Audit Data Step **450**, and/or to the security audit performed in Apply Security Policy Step **460**. In response to these commands, Switch Logic **317** configures Port **305**A to be associated with VLAN **310**A and, thus, communicate through Port **305**D.

While access control lists (ACL **340**A-**340**D) within Router **220** are typically configured prior to Receive Access Request Step **430**, in some embodiments, Reconfigure Port Step **470** further includes configuring one or more members of ACL **340**A-**340**D. In alternative embodiments, reconfiguring of members of ACL **340**A-**340**D may be used to grant access to elements of Less-Restricted Subset **210** as an alternative to associating members of Ports **305**A-**305**G to different members of VLANs **310**A-**310**D.

Access Control **320** may selectively grant access to different parts of Protected Network **200** if ACL **340**B is configured to allow access to different elements within Protected Network **200** than ACL **340**A is configured. For example, in one embodiment, Access Device **230** will receive access to all of Less-Restricted Subset **210** if Port **305**A is associated with VLAN **310**A, or alternatively Access Device **230** will receive access to only a part of Less-Restricted Subset **210** if Port **305**A is associated with VLAN **310**B. When Port **305**A is associated with VLAN **310**A, as in FIG. **3**B, communication from Access Device **230** is directed through Port **335**A of Router **220** subject to ACL **340**A and, thus, may access only those elements of Protected Network **200** allowed by ACL **340**A. When Port **305**A is associated with VLAN **310**B, communication from Access Device **230** is instead passed

through Port **335**B subject to ACL **340**B and may access only those elements of Protected Network **200** permitted by ACL **340**B. A selection between granting access to a first or second part of Protected Network **200** can, therefore, be made using Access Control **320**. The selection is optionally responsive to the security policy used in Apply Security Policy Step **460**, to whether the security policy was fully or partially satisfied, to data obtained in Authenticate User Step **440** or Obtain Audit Data Step **450**, or the like.

As illustrated in the above example, a member of Ports **305**A-**305**G, through which Access Device **230** is requesting access, may be reconfigured to more than one alternative setting in Reconfigure Port Step **470**. For example, in various embodiments a communication port may be reconfigured to a prior administrator specified configuration previously read in Update Port Log Step **410**, reconfigured to be linked to a specific port responsive to the request received in Receive Access Request Step **430**, reconfigured to grant access to a particular part of Less-Restricted Subset **210**, reconfigured to a default setting, and/or the like. By reading administrator specified port configurations in Update Port Log Step **410** and reconfiguring communication ports back to these read configurations in Reconfigure Port Step **470**, an administrator may reconfigure Protected Network **200** without concern that their specifications will be lost or permanently overwritten by methods of the invention. In embodiments wherein a communication port is not reconfigured to a previous administrator specified configuration, Update Port Log Step **410** is optional.

In Communicate Step **480**, communication occurs between Access Device **230** and elements of Less-Restricted Subset **210** via the communication port reconfigured in Reconfigure Port Step **470**. However, in some embodiments, ACL **340**A is configured to allow access to GateKeeper **225** as well as Less-Restricted Subset **210**. Thus, general network traffic does not need to pass through GateKeeper **225**, while communication regarding security of Protected Network **200** is optionally received by GateKeeper **225**. Further communication between Access Device **230** and GateKeeper **225** may provide a variety of advantages. For example, further communication between GateKeeper **225** and an agent executing on Access Device **230** may allow for continuing audits of security aspects of Access Devices **230**. These audits may be similar to those performed in Apply Security Policy Step **460**. In one embodiment, ACL **340**A is configured to grant access to all of Protected Network **200**.

Further communication between GateKeeper **225** and an agent executing on Access Device **230** may also allow for a user of Access Device **230** to explicitly logoff Protected Network **200**. An explicit logoff will result in reconfiguration of Port **305**A such that access is again restricted to Restricted Subset **205**. A logoff may alternatively be responsive to a timeout of communication with Access Device **230**, a SNMP trap message indicating a connection has been broken, or the like.

According to embodiments like that disclosed in U.S. Provisional Patent Application No. 60/513,080, the disclosure of which has been incorporated herein by reference, an AP (e.g., a switch or wireless access point (WAP) which is used to connect end points to the corporate network) may be programmed to prohibit access by the PC (e.g., notebook, desktop PC, PDA, or similar computing device) to the corporate network until authentication with the authentication server passes AND an audit with the software agent with the GK (e.g., software that acts as a gatekeeper by granting or denying access to the corporate network from end points after auditing the end point based on certain criteria) passes, while still supporting the existing encryption and authentication functionality. The method used to support auditing functionality over the existing 802.1x protocol implementation is complicated and not an obvious variation of the 802.1x protocol.

According to an embodiment like that disclosed in U.S. Provisional Patent Application No. 60/513,080, the disclosure of which has been incorporated herein by reference, the auditing protocol takes place between the EP (e.g., end point which can either be a PC or network device) agent software and the GK. A client filter redirects calls for audit information to an agent on the EP and sends the responses to the 802.1x compliant AP which relays them to the EAP server. The EAP server then calls a server filter which sends the responses to the GK for evaluation. The GK sends requests for more information on the reverse path and this continues until the audit is completed. If the audit is successful, the server sends a message to the AP which enables the EP's port allowing access for the PC. If the audit fails, the port on the AP is left disabled.

According to an exemplary embodiment, client filters (CF) and server filters (SF) are added along with an agent and GK to perform audits, as highlighted in FIG. **5**. There may be one or more instances of the CF and SF, which correspond to the separate EAP Authentication Modules (EAPM) that are supported. Note that the agent and GK are logical components. The functionality of the agent and GK can be embedded into the CF and SF, respectively, or in the case of the GK, may reside on a separate server.

The CF and SF APIs have APIs which correspond to the EAPM APIs. Therefore, the EAP Client Layer (ECL) or EAP Server Layer (ESL) can call the CF and SF instances corresponding to a particular authentication method as shown in FIGS. **6**A and **6**B. To the ECL and ESL, each instance of the CF and SF appears to be an EAPM which incorporates the functionality of the original EAPM prior to completion of the success response by the server EAPM.

To use the invention as disclosed in U.S. Provisional Patent Application No. 60/513,080, the disclosure of which has been incorporated herein by reference, the ECL and ESL are configured to use the instance of the CF and SF corresponding to the desired authentication method. This authentication method corresponds to an authentication method supported by one of the EAPMs.

The ECL calls the corresponding CF to perform authentication, which at first calls the appropriate EAPM to obtain the proper authentication response. The authentication response is returned by the CF to the ESL, which sends the response to the server's ESL, SF, and EAPM. This process continues until the authentication either succeeds or fails, at which time the server's authentication EAPM returns a success or failure response to the SF.

If the SF receives a success response from the server EAPM as shown in FIG. **7**, the SF changes to the audit state and calls GK to obtain audit requests to send back to the client. In this state, the SF returns specially formatted audit requests to the ESL which are passed to the ECL, and eventually to the CF which sends back audit responses to the SF requests.

On the client, audit requests are passed to the agent API instead of to the client EAPM. The agent returns information about the local system, which is converted to audit responses that are sent to the server.

During the audit state, the SF and CF exchange audit requests and responses about the EP as shown in FIGS. **8**A and **8**B. The ECL and ESL continue to communicate with the CF and SF, but instead of calling the EAPM, the CF and SF call the agent and GK respectively, to perform this exchange. The audit session continues until the necessary audit information has been passed to the SF.

If the audit indicates the client EP is in compliance, the SF returns a success response. If the VLAN for the EP is specified in the policy, then the VLAN that should be used for this EP is passed back as well.

If the GK determines that the EP has failed the audit, GK returns a failure response to SF which causes one of the following: (1) the SF returns a failure to ECL, and the corresponding port on the AP is left disabled, or (2) the SF returns a success response to the ECL but specifies that the EP should be set to a restricted VLAN where the EP has limited network access. In either case, the EP is isolated from the company network until it successfully passes an audit with the GK.

After the audit has been performed, "keep alives" and updates regarding changes to previous audit information are exchanged. Changes are reevaluated and if inconsistent with the current state, access to the network is modified appropriately by changing the VLAN used for the EP or by terminating access by the EP by communicating with the AP.

Several embodiments are specifically illustrated and/or described herein. However, it will be appreciated that modifications and variations are covered by the above teachings and within the scope of the appended claims without departing from the spirit and intended scope thereof. For example, the teachings herein may be applied to embodiments wherein Access Point **215** is a wireless access point and MAC addresses, or the like, are used instead of VLANs to separate traffic from different instances of Access Device **230**. It is, thus, anticipated that network management techniques other than VLANs may be used to distinguish Less-Restricted Subset **210** from Restricted Subset **205**. In some embodiments, various aspects of GateKeeper **225** may be incorporated into Access Point **215** and/or Router **220**. GateKeeper **225** and Policy Manager **250** are each optionally implemented on a plurality of computing devices within Restricted Subset **205**.

In some embodiments, GateKeeper **225** uses DHCP **260** to assign IP addresses from a restricted IP address range depending on the compliance of Access Device **230** to security policies **330**A-**330**B. GateKeeper **225** inserts DHCP options and/or modifies the IP source addresses of DHCP-DISCOVER and DHCPREQUEST packets, based on the compliance of the Access Device **230** to security policies **330**A-**330**B. DHCP **260** is configured to provide an address from the restricted address range or the less-restricted address range based on the source address and/or options present in the DHCP request or discover packets that have been modified by GateKeeper **225**. In some embodiments, the insertion of DHCP options and/or modification of IP source addresses may be used to characterize restricted and less-restricted subnets, rather then configuring port associations with VLANs as discussed herein.

The embodiments discussed herein are illustrative of the present invention. As these embodiments of the present invention are described with reference to illustrations, various modifications or adaptations of the methods and or specific structures described may become apparent to those skilled in the art. All such modifications, adaptations, or variations that rely upon the teachings of the present invention, and through which these teachings have advanced the art, are considered to be within the spirit and scope of the present invention. Hence, these descriptions and drawings should not be considered in a limiting sense, as it is understood that the present invention is in no way limited to only the embodiments illustrated.

I claim:

1. A network gatekeeper comprising:

at least one security policy including requirements that must be satisfied before an access device is granted access to a less-restricted subset of a protected network;

a policy auditor configured to audit the access device using the at least one security policy, in response to a request to access the less-restricted subset of the protected network, the request being sent from the access device to the gatekeeper via a communication device; and

an access control configured to reconfigure the communication device such that data sent from the access device is received by the less-restricted subset of the protected network rather than merely a restricted subset of the protected network, if the audit results in a determination that the access device meets the requirements of the at least one security policy, the restricted subset of the protected network including the gatekeeper.

2. The network gatekeeper of claim **1**, wherein the network gatekeeper is communicatively coupled with a router configured to limit access to only the restricted subset using an access control list.

3. The network gatekeeper of claim **1**, wherein the network gatekeeper is further configured to update the access device using an update module.

4. The network gatekeeper of claim **1**, wherein the network gatekeeper is further configured to obtain system data from the access device.

5. The network gatekeeper of claim **4**, wherein the network gatekeeper is further configured to use the system data to determine if the access device meets requirements of a security policy, and to issue commands responsive to this determination, the commands being configured to grant access to the less-restricted subset.

6. The network gatekeeper of claim **4**, wherein the system data includes antivirus software version data.

7. The network gatekeeper of claim **1**, wherein the network gatekeeper is further configured to read an administrator specified configuration of a communication port from the communication device, to store the read administrator specified configuration in a port configuration table, and to issue commands configured to prevent access to the less-restricted subset of the protected network via the communication port.

8. The network gatekeeper of claim **7**, wherein the network gatekeeper is further configured to use the stored administrator specified configuration when issuing commands configured to grant access to the less-restricted subset.

9. The network gatekeeper of claim **1**, wherein the network gatekeeper is further configured to select from a hierarchical set of security policies, the hierarchical set configured to provide access to different parts of the less-restricted subset of the protected network.

10. The network gatekeeper of claim **1**, wherein the restricted subset of the protected network includes elements configured to communicate with the access device having a questionable security status, and the less-restricted subset of the protected network includes those elements of the protected network not included in the restricted subset.

11. The network gatekeeper of claim **1**, wherein the at least one security policy is responsive to an identity of the access device.

12. The network gatekeeper of claim **1**, wherein the at least one security policy is selected by the policy auditor responsive to a part of the less-restricted subset of the protected network to which access is requested.

13. The network gatekeeper of claim **1**, wherein the audit is responsive to antivirus software executing on the access device.

14. The network gatekeeper of claim **1**, wherein the audit is responsive to an operating system, a version of the operating system, or patches applied to the operating system, executing on the access device.

15. The network gatekeeper of claim **1**, wherein the policy auditor is configured to request data from an agent on the access device.

16. The network gatekeeper of claim **1**, wherein the communication device includes a wireless access point.

17. The network gatekeeper of claim **1**, wherein the communication device includes a wireless access point configured to support an 802.1x standard.

18. The network gatekeeper of claim **1**, wherein the communication device includes a network switch.

19. The network gatekeeper of claim **1**, wherein the communication device includes a router.

20. The network gatekeeper of claim **1**, wherein the reconfiguration of the communication device includes reconfiguring a port on the communication device such that data received at the port is passed on to elements of both the less-restricted subset of the protected network and the restricted subset of the protected network.

21. The network gatekeeper of claim **20**, wherein reconfiguring the port includes returning the port to an administrator specified setting.

22. The network gatekeeper of claim **20**, wherein reconfiguring the port includes sending one or more commands from the gatekeeper to the communication device.

23. The network gatekeeper of claim **1**, wherein the network gatekeeper is further configured to authenticate a user of the access device.

24. The network gatekeeper of claim **1**, wherein the network gatekeeper is configured to update the access device if requirements of the security policy are not satisfied.

25. The network gatekeeper of claim **1**, wherein the communication device includes a remote access virtual private network.

26. The network gatekeeper of claim **1**, wherein the restricted subset of the protected network is characterized by an access control list.

27. A method of granting access to a protected network, the method comprising:

receiving a request for access to a less-restricted subset of the protected network from an access device, the request being received through a communication port of an access point, the communication port configured for communicating between the access device and a restricted subset of the protected network, the restricted subset including a gatekeeper;

applying a security policy to the access device, responsive to the request;

reconfiguring the communication port for communicating data between the access device and the less-restricted subset of the protected network without passing the data through the gatekeeper, if requirements of the security policy are satisfied;

reading an administrator specified configuration of the communication port from the access point; and

storing the read administrator specified configuration.

28. A method of granting access to a protected network, the method comprising:

receiving a request for access to a less-restricted subset of the protected network from an access device, the request being received through a communication port of an access point, the communication port configured for communicating between the access device and a restricted subset of the protected network, the restricted subset including a gatekeeper;

applying a security policy to the access device, responsive to the request;

reconfiguring the communication port for communicating data between the access device and the less-restricted subset of the protected network without passing the data through the gatekeeper, if requirements of the security policy are satisfied; and

communicating between the gatekeeper and an agent executing on the access device to monitor security status of the access device after reconfiguring the communication port for communicating between the access device and the less-restricted subset.

29. The method of claim **28**, further including authenticating a user of the access device.

30. The method of claim **29**, further including obtaining system data from the access device, and wherein applying the security policy includes using the system data to determine if the access device satisfies the requirements of the security policy.

31. The method of claim **30**, wherein the system data includes antivirus software version data.

32. The method of claim **28**, further including configuring the communication port such that requests for access to the less-restricted subset are communicated to the gatekeeper.

33. The method of claim **28**, wherein the access point is a network switch.

34. The method of claim **28**, wherein the access point is a wireless access point.

35. The method of claim **28**, wherein the access point is a remote access virtual private network.

36. The method of claim **28**, wherein the gatekeeper is accessible to elements of the less-restricted subset of the protected network.

37. The method of claim **28**, wherein the restricted subset of the protected network is characterized by an access control list.

38. The method of claim **28**, further including updating the access device if requirements of the security policy are not satisfied.

39. The method of claim **28**, wherein the security policy includes an audit of the access device.

40. A method of granting access to a protected network, the method comprising:

receiving a request for access to a less-restricted subset of the protected network from an access device, the request being received through a communication port of an access point, the communication port configured for communicating between the access device and a restricted subset of the protected network, the restricted subset including a gatekeeper;

applying a security policy to the access device, responsive to the request;

reconfiguring the communication port for communicating data between the access device and the less-restricted subset of the protected network without passing the data through the gatekeeper, if requirements of the security policy are satisfied; and

selecting the security policy from among a plurality of security policies, the selecting being responsive to an identity of elements within the less-restricted subset of the protected network to which access is requested.

41. A method of granting access to a protected network, the method comprising:

receiving a request for access to a less-restricted subset of the protected network from an access device, the request being received through a communication port of an access point, the communication port configured for communicating between the access device and a restricted subset of the protected network, the restricted subset including a gatekeeper;

applying a security policy to the access device, responsive to the request;

reconfiguring the communication port for communicating data between the access device and the less-restricted subset of the protected network without passing the data through the gatekeeper, if requirements of the security policy are satisfied; and

updating the access device if requirements of the security policy are not satisfied.

42. The method of claim **41**, wherein the security policy includes an audit of the access device.

43. The method of claim **41**, further including communicating between the gatekeeper and an agent executing on the access device to obtain system data from the access device, and wherein applying the security policy includes using the system data to determine if the access device satisfies the requirements of the security policy.

44. The method of claim **43**, wherein the system data includes information regarding devices connected to the access device.

45. The method of claim **43**, wherein the system data includes information regarding computing code executing on the access device.

46. The method of claim **41**, further including selecting the security policy from among a plurality of security policies.

47. The method of claim **46**, wherein selecting the security policy is responsive to an identity of the access device or an identity of a user of the access device.

48. The method of claim **41**, wherein the access point is a network switch.

49. The method of claim **41**, wherein the access point is a wireless access point.

50. The method of claim **41**, wherein the access point is a remote access virtual private network.

51. The method of claim **41**, wherein the gatekeeper is accessible to elements of the less-restricted subset of the protected network.

52. The method of claim **41**, wherein the restricted subset of the protected network is characterized by an access control list.

53. The method of claim **41**, further including authenticating a user of the access device.

54. The method of claim **53**, further including obtaining system data from the access device, and wherein applying the security policy includes using the system data to determine if the access device satisfies the requirements of the security policy.

55. The method of claim **54**, wherein the system data includes antivirus software version data.

56. A method of granting access to a protected network, the method comprising:

receiving a request for access to a less-restricted subset of the protected network from an access device, the request being received through a communication port of an access point, the communication port configured for communicating between the access device and a restricted subset of the protected network, the restricted subset including a gatekeeper and being characterized by an access control list, the access to the restricted subset of the protected network being responsive to a VLAN configured to communicate with the protected network subject to the access control list;

applying a security policy to the access device, responsive to the request; and

reconfiguring the communication port for communicating data between the access device and the less-restricted subset of the protected network without passing the data through the gatekeeper, if requirements of the security policy are satisfied.

57. A method of granting access to a protected network, the method comprising:

receiving a first communication from an access device at a communication port, the communication port being configured to pass the first communication to a restricted subset of the protected network, the restricted subset including a gatekeeper configured to enforce a security policy for access to a less-restricted subset of the protected network;

receiving a command from the gatekeeper, the command being responsive to the received first communication and being configured to reconfigure the communication port to communicate data to the less-restricted subset of the protected network;

configuring the communication port to communicate data to the less-restricted subset of the protected network rather than merely the restricted subset of the protected network, responsive to the received command; and

receiving a second communication from the access device at the communication port, the communication port now being configured to pass the second communication to the less-restricted subset of the protected network.

58. The method of claim **57**, wherein configuring the communication port includes associating the communication port with a VLAN.

59. The method of claim **57**, wherein the communication port is limited to communicating with the restricted subset of the protected network by an access control list, when the first communication is received.

60. The method of claim **59**, wherein the communication port is limited to communicating with elements of the protected network by another access control list, when the second communication is received.

61. The method of claim **59**, wherein the communication port is coupled with a network switch.

62. The method of claim **59**, wherein the communication port is coupled with a wireless access point.

63. The method of claim **59**, wherein the communication port is coupled with a remote access virtual private network.

64. The method of claim **57**, further including selecting the security policy from a plurality of security policies.

65. The method of claim **57**, further including authenticating a user of the access device.

66. The method of claim **65**, further including obtaining system data from the access device, and wherein applying the security policy includes using the system data to determine if the access device satisfies the requirements of the security policy.

67. The method of claim **66**, wherein the system data includes antivirus software version data.

68. The method of claim **57**, further including communicating between the gatekeeper and an agent executing on the access device to obtain system data from the access device, and wherein applying the security policy includes using the system data to determine if the access device satisfies the requirements of the security policy.

69. The method of claim **68**, wherein the system data includes information regarding devices connected to the access device.

70. The method of claim **68**, wherein the system data includes information regarding computing code executing on the access device.

71. The method of claim **57**, further including communicating between the gatekeeper and an agent executing on the access device to monitor security status of the access device after reconfiguring the communication port for communicating between the access device and the less-restricted subset.

72. The method of claim **57**, further including updating the access device if requirements of the security policy are not satisfied.

73. A computing network comprising:

elements configured to communicate with one or more access devices using at least a communication port of an access point, the elements including at least a gatekeeper;

means for dividing the elements of the computing network into a restricted subset and a less-restricted subset,

the restricted subset including one or more elements of the computing network configured to communicate with access devices having an unknown security status, and

the less-restricted subset including one or more elements of the computing network not included in the restricted subset;

means for receiving a request at the restricted subset, the request being to access the less-restricted subset;

means for enforcing a security policy in response to the request; and

means for granting access to the less-restricted subset via the communication port of the access point, responsive to the enforcement of the security policy, the access to the less-restricted subset including communication to the less-restricted subset not necessarily passing through the restricted subset.

74. The computing network of claim **73**, wherein the communication port of the access point is limited to communicating with the restricted subset by an access control list when the request is received.

75. The computing network of claim **74**, wherein the communication port of the access point is limited to communicating with the elements of the computing network by another access control list after access is granted to the less-restricted subset.

76. The computing network of claim **73**, wherein the communication port of the access point is coupled with a network switch.

77. The computing network of claim **73**, wherein the communication port of the access point is coupled with a wireless access point.

78. The computing network of claim **73**, wherein the communication port of the access point is coupled with a remote access virtual private network.

79. The computing network of claim **73**, wherein the means for granting access to the less-restricted subset includes means for authenticating a user of the one or more access devices.

80. The computing network of claim **79**, wherein the means for granting access to the less-restricted subset includes means for obtaining system data from the one or more access devices, and wherein the means for enforcing the security policy includes means for using the system data to determine if the one or more access devices satisfies requirements of the security policy.

81. The computing network of claim **80**, wherein the system data includes antivirus software version data.

82. A computer readable medium including computer code configured for controlling access to a computer network, the computer code comprising:

a code segment configured for receiving a request for access to a less-restricted subset of the protected network from an access device, the request being received through a communication port of an access point, the communication port configured for communicating between the access device and a restricted subset of the protected network, the restricted subset including a gatekeeper;

a code segment configured for applying a security policy to the access device, responsive to the request;

a code segment configured for reconfiguring the communication port for communicating data between the access device and the less-restricted subset of the protected network without passing the data through the gatekeeper, if requirements of the security policy are satisfied;

a code segment configured for reading an administrator specified configuration of the communication port from the access point; and

a code segment configured for storing the read administrator specified configuration.

* * * * *