US008578444B2

(12) **United States Patent**
Lum et al.

(10) **Patent No.: US 8,578,444 B2**
(45) **Date of Patent: Nov. 5, 2013**

(54) **SYSTEMS AND METHODS OF CONTROLLING NETWORK ACCESS**

(75) Inventors: **Stacey C. Lum**, Los Altos, CA (US); **Yuhshiow Alice Lee**, Saratoga, CA (US)

(73) Assignee: **Info Express, Inc.**, Mountain View, CA (US)

(*) Notice: Subject to any disclaimer, the term of this patent is extended or adjusted under 35 U.S.C. 154(b) by 0 days.

(21) Appl. No.: **13/523,854**

(22) Filed: **Jun. 14, 2012**

(65) **Prior Publication Data**

US 2012/0254937 A1 Oct. 4, 2012

Related U.S. Application Data

(63) Continuation of application No. 13/371,381, filed on Feb. 10, 2012, now Pat. No. 8,347,350, which is a continuation of application No. 13/157,309, filed on Jun. 10, 2011, now Pat. No. 8,117,645, which is a continuation of application No. 12/273,037, filed on Nov. 18, 2008, now Pat. No. 8,051,460, which is a continuation of application No. 10/949,179, filed on Sep. 24, 2004, now Pat. No. 7,523,484.

(60) Provisional application No. 60/513,080, filed on Oct. 21, 2003, provisional application No. 60/505,582, filed on Sep. 24, 2003.

(51) **Int. Cl.**
H04L 9/00 (2006.01)
H04L 9/32 (2006.01)

(52) **U.S. Cl.**
USPC **726/1**; 726/2; 726/3

(58) **Field of Classification Search**
USPC 726/1–4, 11–12, 15; 713/150, 153, 155, 713/168; 380/270; 709/220–221, 223–225, 709/227–228
See application file for complete search history.

(56) **References Cited**

U.S. PATENT DOCUMENTS

1,830,383	A	11/1931	Bos
1,860,326	A	5/1932	Jackson
2,131,067	A	9/1938	Paden
2,247,592	A	7/1941	Swift
2,519,435	A	8/1950	Byrd, Jr.

(Continued)

FOREIGN PATENT DOCUMENTS

JP	2005-079706	3/2005
WO	WO 0056027 A1	9/2000
WO	WO 2006/029217	3/2006

OTHER PUBLICATIONS

"Network Access Control from Mirage Networks," Mirage Networks, 2006.

(Continued)

Primary Examiner — Hosuk Song
(74) *Attorney, Agent, or Firm* — Peters Verny, LLP

(57) **ABSTRACT**

A new approach to network security includes manipulating an access point such that an initial communication from an external device is passed to a restricted subset of a computing network including a gatekeeper. The gatekeeper is configured to enforce a security policy against the external device before granting access to a less-restricted subset of the computing network. If requirements of the security policy are satisfied, then the gatekeeper reconfigures the access point such that further communication from the external device may be received by elements of the less-restricted subset. Enforcement of the security policy optionally includes performing a security audit of the external device.

22 Claims, 10 Drawing Sheets

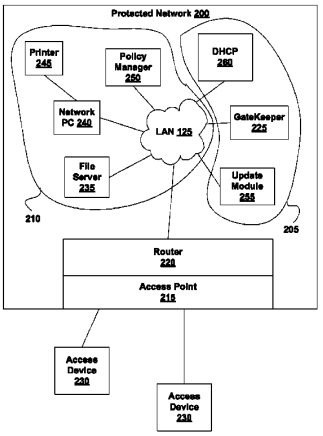

CISCO SYSTEMS, INC.
FORTINET, INC.
IPR2024-00677
Ex. 1201, p. 1 of 22

(56) **References Cited**

U.S. PATENT DOCUMENTS

2,731,056	A	1/1956	Anson	
3,100,664	A	8/1963	Duval	
3,701,557	A	10/1972	Centolante	
4,181,339	A	1/1980	Rigsby	
4,951,984	A	8/1990	Huang	
5,010,622	A	4/1991	Morita	
5,331,634	A	7/1994	Fischer	
5,606,668	A	2/1997	Shwed	
5,701,635	A	12/1997	Hawkes	
5,828,832	A	10/1998	Holden et al.	
5,835,481	A	11/1998	Akyol et al.	
5,842,002	A	11/1998	Schnurer et al.	
5,852,722	A	12/1998	Hamilton	
5,944,368	A	8/1999	Hastings	
5,950,195	A	9/1999	Stockwell et al.	
5,968,176	A	10/1999	Nessett et al.	
6,006,259	A	12/1999	Adelman et al.	
6,044,402	A	3/2000	Jacobson et al.	
6,088,451	A	7/2000	He	
6,119,162	A	9/2000	Li et al.	
6,182,226	B1	1/2001	Reid et al.	
6,219,786	B1	4/2001	Cunningham et al.	
6,226,372	B1	5/2001	Beebe et al.	
6,304,973	B1	10/2001	Williams	
6,363,489	B1	3/2002	Comay et al.	
6,393,484	B1	5/2002	Massarani	
6,473,407	B1	10/2002	Ditmer et al.	
6,671,737	B1	12/2003	Snowdon et al.	
6,678,835	B1	1/2004	Shah et al.	
6,738,908	B1	5/2004	Bonn et al.	
6,745,333	B1	6/2004	Thomsen	
6,769,000	B1	7/2004	Akhtar et al.	
6,834,414	B2	12/2004	Chiu	
6,873,988	B2	3/2005	Herrmann et al.	
6,980,660	B1	12/2005	Hind et al.	
6,988,133	B1	1/2006	Zavalkovsky et al.	
7,024,686	B2	4/2006	Brawn et al.	
7,042,988	B2	5/2006	Juitt et al.	
7,055,173	B1	5/2006	Chaganty et al.	
7,096,502	B1	8/2006	Fox	
7,103,915	B2	9/2006	Redlich et al.	
7,134,022	B2	11/2006	Flyntz	
7,194,763	B2	3/2007	Potter et al.	
7,213,265	B2	5/2007	Dapp	
7,222,359	B2	5/2007	Freund et al.	
7,249,187	B2	7/2007	Sobel et al.	
7,249,374	B1	7/2007	Lear et al.	
7,299,294	B1	11/2007	Bruck et al.	
7,302,256	B1 *	11/2007	O'Hara et al.	455/418
7,325,246	B1	1/2008	Halasz et al.	
7,336,790	B1	2/2008	Caronni et al.	
7,350,077	B2 *	3/2008	Meier et al.	713/171
7,350,226	B2	3/2008	Moriconi et al.	
7,373,508	B1 *	5/2008	Meier et al.	713/168
7,380,271	B2	5/2008	Moran et al.	
7,386,889	B2	6/2008	Shay	
7,441,043	B1	10/2008	Henry et al.	
7,457,418	B2	11/2008	Bunte et al.	
7,458,098	B2	11/2008	Judge et al.	
7,469,418	B1	12/2008	Wilkinson et al.	
7,515,569	B2	4/2009	Prasad	
7,523,484	B2	4/2009	Lum	
7,530,112	B2	5/2009	Smith	
7,533,407	B2	5/2009	Lewis et al.	
7,539,862	B2	5/2009	Edgett et al.	
7,546,629	B2	6/2009	Albert et al.	
7,568,217	B1	7/2009	Prasad et al.	
7,574,737	B1	8/2009	Loh	
7,590,733	B2	9/2009	Lum	
7,606,242	B2	10/2009	Whelan et al.	
7,720,050	B1	5/2010	Blank	
7,743,158	B2	6/2010	Fu et al.	
7,752,320	B2	7/2010	Kappes et al.	
7,788,705	B2	8/2010	Bruestle	
7,821,926	B2	10/2010	Hannel et al.	
7,836,490	B2	11/2010	Smith	
7,984,496	B2	7/2011	Loh	
8,051,460	B2	11/2011	Lum et al.	
8,108,909	B2	1/2012	Lum	
8,112,788	B2	2/2012	Lum	
8,117,645	B2	2/2012	Lum	
8,146,160	B2	3/2012	Orr et al.	
8,200,818	B2	6/2012	Freund	
8,230,480	B2	7/2012	Fazal et al.	
8,332,464	B2	12/2012	Dispensa et al.	
2001/0014150	A1	8/2001	Beebe et al.	
2002/0010869	A1	1/2002	Kim	
2002/0023273	A1	2/2002	Song	
2002/0029276	A1	3/2002	Bendinelli et al.	
2002/0073337	A1	6/2002	Ioele et al.	
2002/0120749	A1	8/2002	Widegren et al.	
2002/0157090	A1	10/2002	Anton, Jr.	
2003/0012205	A1	1/2003	Foti et al.	
2003/0023880	A1	1/2003	Edwards et al.	
2003/0046586	A1	3/2003	Bheemarasetti et al.	
2003/0084331	A1	5/2003	Dixon et al.	
2003/0126464	A1	7/2003	McDaniel et al.	
2003/0131262	A1	7/2003	Goddard	
2003/0191966	A1	10/2003	Gleichauf	
2003/0208694	A1	11/2003	Fang	
2003/0229808	A1	12/2003	Heintz et al.	
2004/0010713	A1	1/2004	Vollbrecht et al.	
2004/0017019	A1	1/2004	Huang et al.	
2004/0024885	A1	2/2004	Bush, III et al.	
2004/0054926	A1	3/2004	Ocepek et al.	
2004/0098610	A1	5/2004	Hrastar	
2004/0103314	A1	5/2004	Liston	
2004/0107345	A1	6/2004	Brandt et al.	
2004/0158735	A1	8/2004	Roese	
2004/0162994	A1	8/2004	Cohen et al.	
2004/0172558	A1	9/2004	Callahan et al.	
2004/0181690	A1	9/2004	Rothermel et al.	
2004/0193912	A1	9/2004	Li et al.	
2004/0193943	A1	9/2004	Angelino et al.	
2004/0243835	A1	12/2004	Terzis et al.	
2005/0027837	A1	2/2005	Roese et al.	
2005/0044197	A1	2/2005	Lai	
2005/0050365	A1	3/2005	Seki et al.	
2005/0081058	A1	4/2005	Chang et al.	
2005/0278775	A1	12/2005	Ross	
2006/0026669	A1	2/2006	Zakas	
2006/0050703	A1	3/2006	Foss	
2006/0089938	A1	4/2006	Leonard et al.	
2006/0095968	A1	5/2006	Portolani et al.	
2006/0147043	A1	7/2006	Mann et al.	
2006/0161970	A1	7/2006	Hopen et al.	
2006/0164199	A1	7/2006	Gilde et al.	
2007/0064689	A1	3/2007	Shin et al.	
2007/0112574	A1	5/2007	Greene	
2007/0157306	A1	7/2007	Elrod et al.	
2007/0180490	A1	8/2007	Renzi et al.	
2008/0060067	A1	3/2008	Kim et al.	
2008/0209044	A1	8/2008	Forrester	
2009/0043765	A1	2/2009	Pugh	
2009/0083830	A1	3/2009	Lum	
2012/0131637	A1	5/2012	Lum	
2012/0246698	A1	9/2012	Lum	
2012/0254938	A1	10/2012	Lum	
2012/0254939	A1	10/2012	Lum	

OTHER PUBLICATIONS

"Network Access Quarantine Control in Microsoft Windows Server 2003," Windows Server System, Published Mar. 2003, Updated Jul. 29, 2009, 37 pages, Microsoft Corporation, Redmond, WA, USA.

"Packet Fence Overview," Packet Fencer.TM., located at http://www.packetfence.org, downloaded: 2006.

PacketFence Documentation, URL http://packetfence.org, Release 1.5.1, Sep. 8, 2005, modified Jul. 13, 2006, 40 pages.

U.S. Appl. No. 11/227,679, Stacey C. Lum, Dynamic Address Assignement For Access Control on DHCP Netwrks, filed Sep. 14, 2005.

U.S. Appl. No. 11/356,555, Stacey Lum, Peer Based Network Access Control, filed Feb. 16, 2006.

(56) **References Cited**

OTHER PUBLICATIONS

U.S. Appl. No. 11/433,225, Stacey C. Lum, Network Access Control Management, filed May 11, 2006.
U.S. Appl. No. 11/433,723, Stacey Lum, Network access control including dynamic policy enforcement poin, filed May 11, 2006.
U.S. Appl. No. 13/157,308, Stacy C. Lum, Systems and Methods of Controlling Network Access, filed Jun. 10, 2011.
U.S. Appl. No. 13/157,309, Stacy C. Lum, Systems and Methods of Controlling Network Access, filed Jun. 10, 2011.
U.S. Appl. No. 13/157,310, Stacy C. Lum, Systems and Methods of Controlling Network Access, filed Jun. 10, 2011.
Whalen, Sean, "An Introduction to ARP Spoofing," at http://node99.org/projects/arpsppf, updated May 2001, 7 pages.
U.S. Appl. No. 10/949,179, Office Action mailed Feb. 29, 2008.
U.S. Appl. No. 12/273,037, Office Action mailed Jul. 9, 2010.
U.S. Appl. No. 13/157,308, Office Action mailed Aug. 4, 2011.
U.S. Appl. No. 13/157,309, Office Action mailed Aug. 4, 2011.
U.S. Appl. No. 13/157,310, Office Action mailed Aug. 5, 2011.
U.S. Appl. No. 13/371,381, Office Action mailed Jul. 17, 2012.
U.S. Appl. No. 13/523,849, Office Action mailed Sep. 28, 2012.
Cardinal Intellectual Property, Evanston, IL., Cardinal IP Search Results, Aug. 12, 2013, pp. 1-6.
Fratto, Policy enforces [security policy monitoring applications], DialogWeb—Journal of Network Computing, vol. 14, No. 10, pp. 43-55, May 29, 2003.
Hunt, Internet/Intranet firewall security—policy, architecture and transaction services, [http://see.xidian.edu.cn/hujianwei/papers/032-firewall%20security.pdf], 1998.
MCI, MCI Strengthens Remote Access Security for Mobile and Remote Users, [DialogWeb—PR Newswire Europe], Apr. 6, 2004.
Moffett, et al., Specifying Discretionary Access Control Policy for Distributed Systems, 1990, [http://citeseerx.ist.psu.edu/viewdoc/download?doi=10.1.1.41.6306&rep=rep1&type=pdf].
Sygate Technologies, Spygate Announces 802.1x Interoperability with Leading Switch Companies to Enforce Endpoint Policy Compliance Enterprise Endpoint Security Leader Works with Cisco, Enterasys, Extreme, HP, and Nortel to Ensure all Endpoints are in Compliance with Corporate Security Policies, [DialogWeb—PR Newsire Europe] Feb. 24, 2004.
Wolthusen, Layered multipoint network defense and security policy enforcement, <http://citeseerx.ist.psu.edu/viewdoc/download?doi=10.1.15.7401&rep=rep1&type=pdf>, 2001.
Yu, Access control and authorization plan for customer control of network services, [DialogWeb; http://ieeexplore.ieee.org/xpl/login.jsp?tp=&arnumber=64085&url=http%3A%2F%Fieeexplore.ieee.org%2 1989.

* cited by examiner

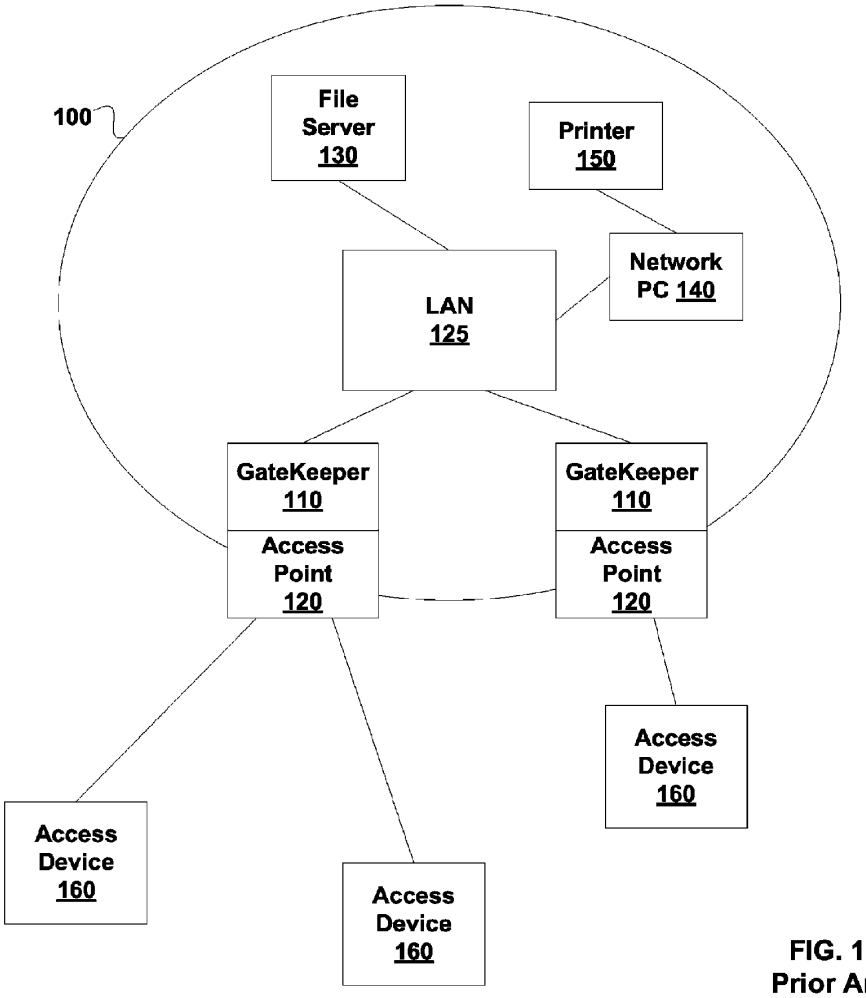

FIG. 1
Prior Art

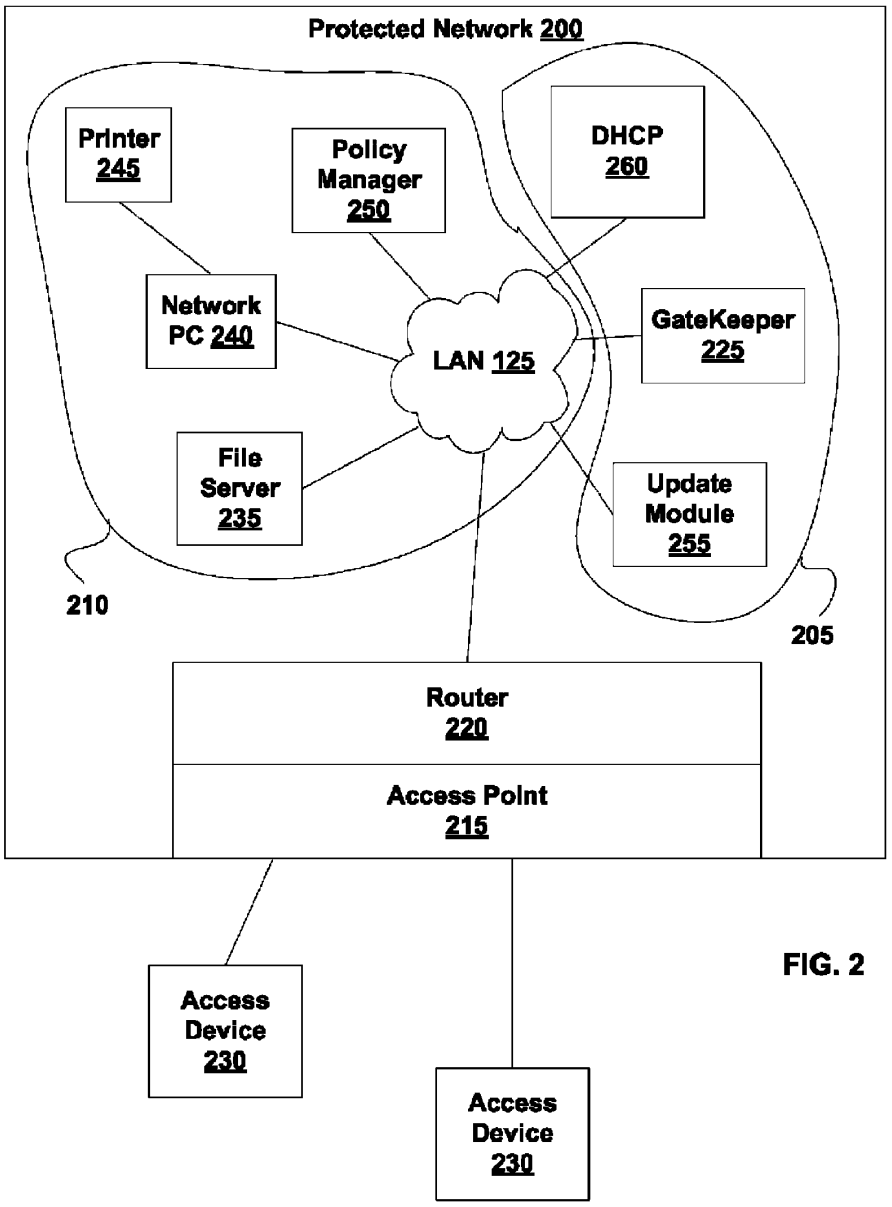
Protected Network 200
Printer 245
Policy Manager 250
DHCP 260
Network PC 240
LAN 125
GateKeeper 225
File Server 235
Update Module 255
210
205
Router 220
Access Point 215
Access Device 230
Access Device 230

FIG. 2

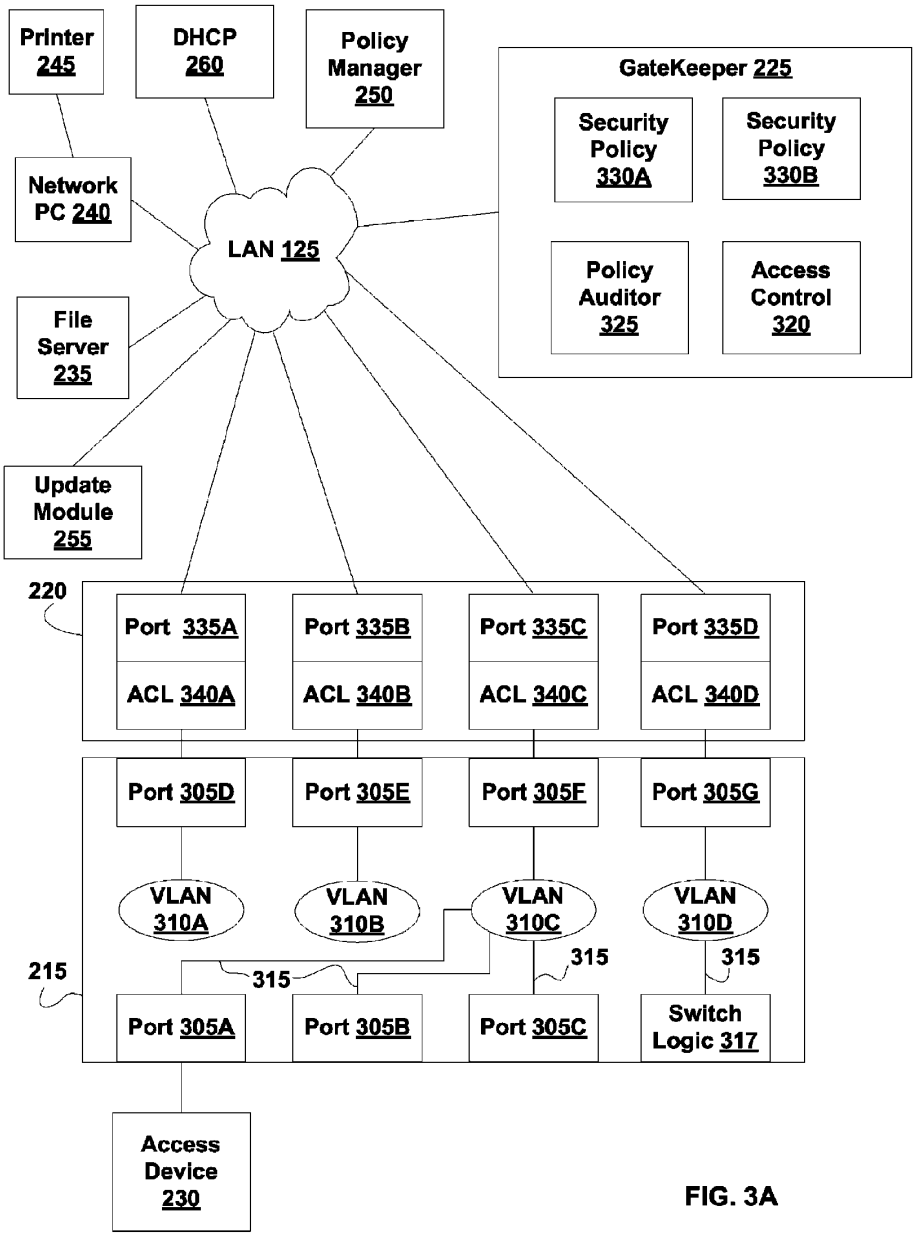
Printer 245
DHCP 260
Policy Manager 250
GateKeeper 225
Security Policy 330A
Security Policy 330B
Policy Auditor 325
Access Control 320
Network PC 240
LAN 125
File Server 235
Update Module 255
220
Port 335A
Port 335B
Port 335C
Port 335D
ACL 340A
ACL 340B
ACL 340C
ACL 340D
Port 305D
Port 305E
Port 305F
Port 305G
VLAN 310A
VLAN 310B
VLAN 310C
VLAN 310D
315
315
315
215
Port 305A
Port 305B
Port 305C
Switch Logic 317
Access Device 230

FIG. 3A

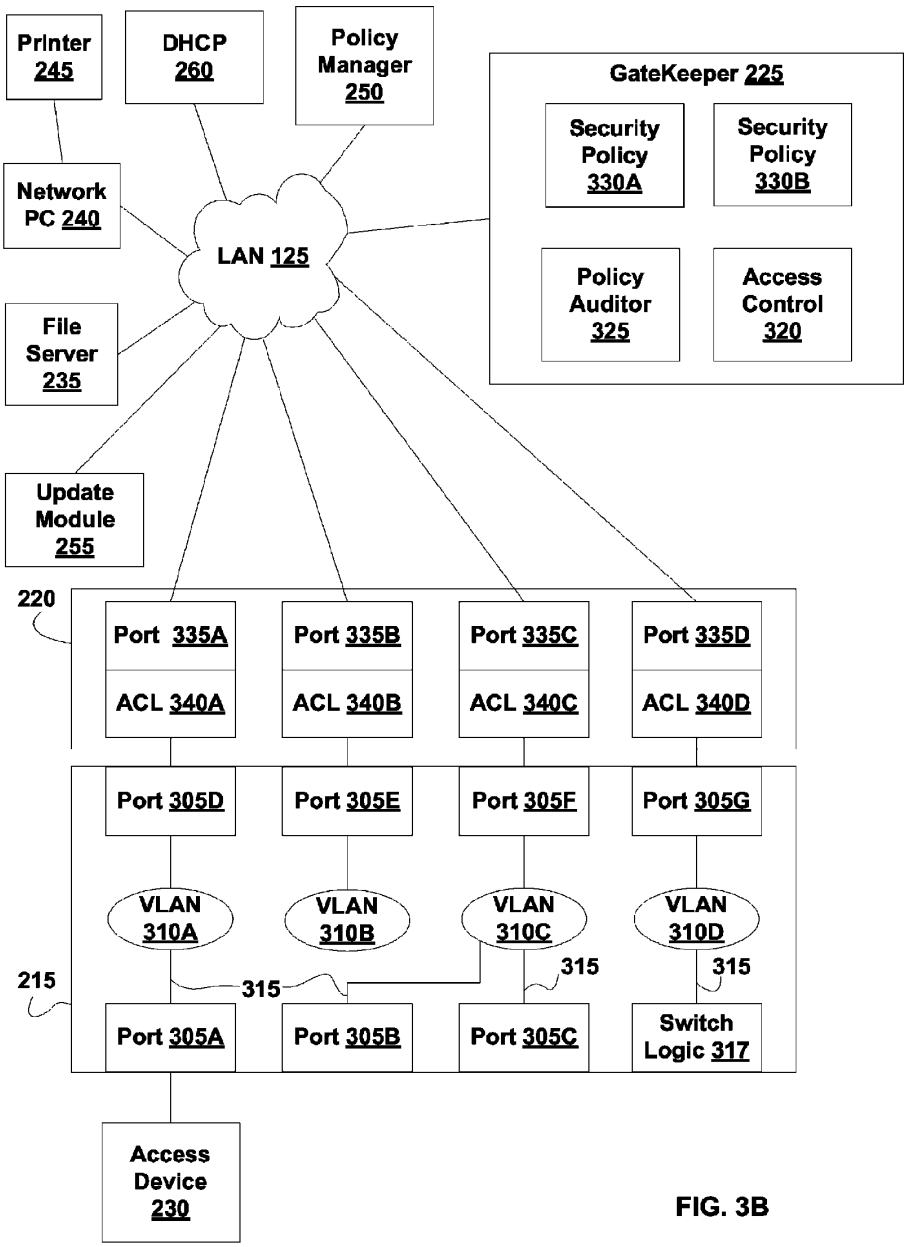
Printer 245
DHCP 260
Policy Manager 250
GateKeeper 225
Security Policy 330A
Security Policy 330B
Network PC 240
LAN 125
Policy Auditor 325
Access Control 320
File Server 235
Update Module 255
220
Port 335A
Port 335B
Port 335C
Port 335D
ACL 340A
ACL 340B
ACL 340C
ACL 340D
Port 305D
Port 305E
Port 305F
Port 305G
VLAN 310A
VLAN 310B
VLAN 310C
VLAN 310D
315
315
315
215
Port 305A
Port 305B
Port 305C
Switch Logic 317
Access Device 230

FIG. 3B

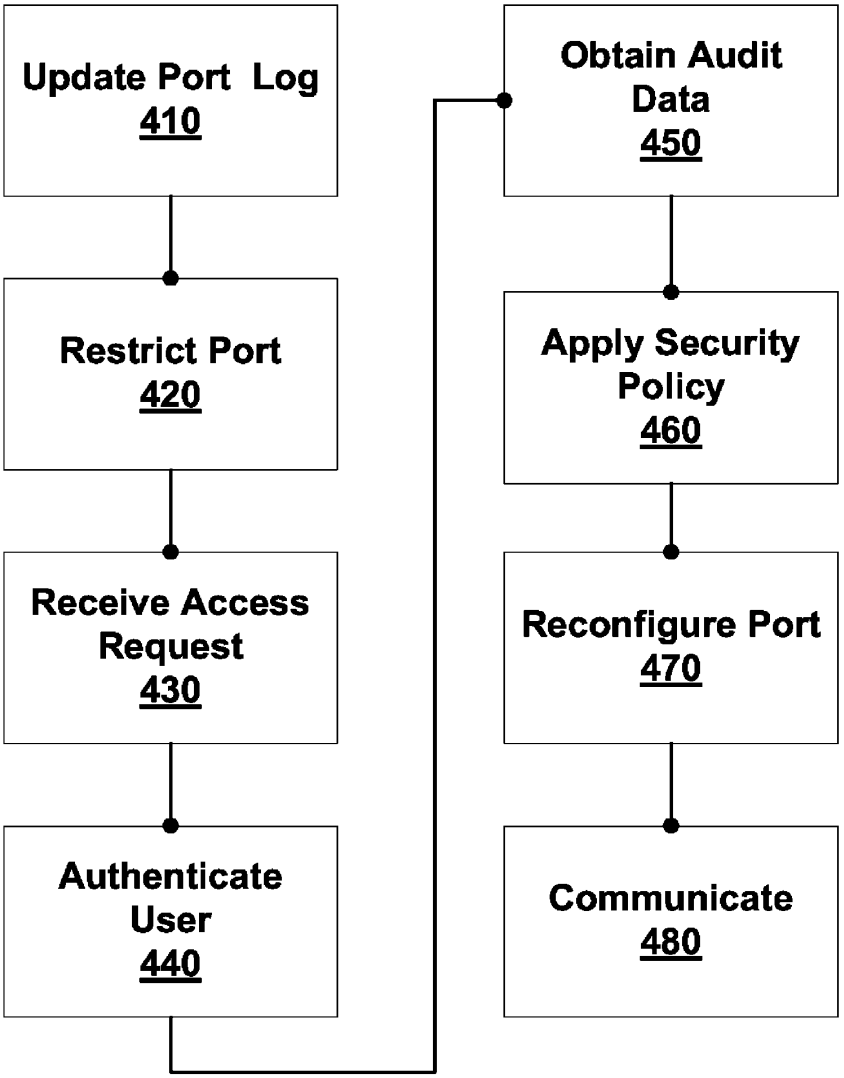
Update Port Log
410
Restrict Port
420
Receive Access Request
430
Authenticate User
440
Obtain Audit Data
450
Apply Security Policy
460
Reconfigure Port
470
Communicate
480

FIG. 4

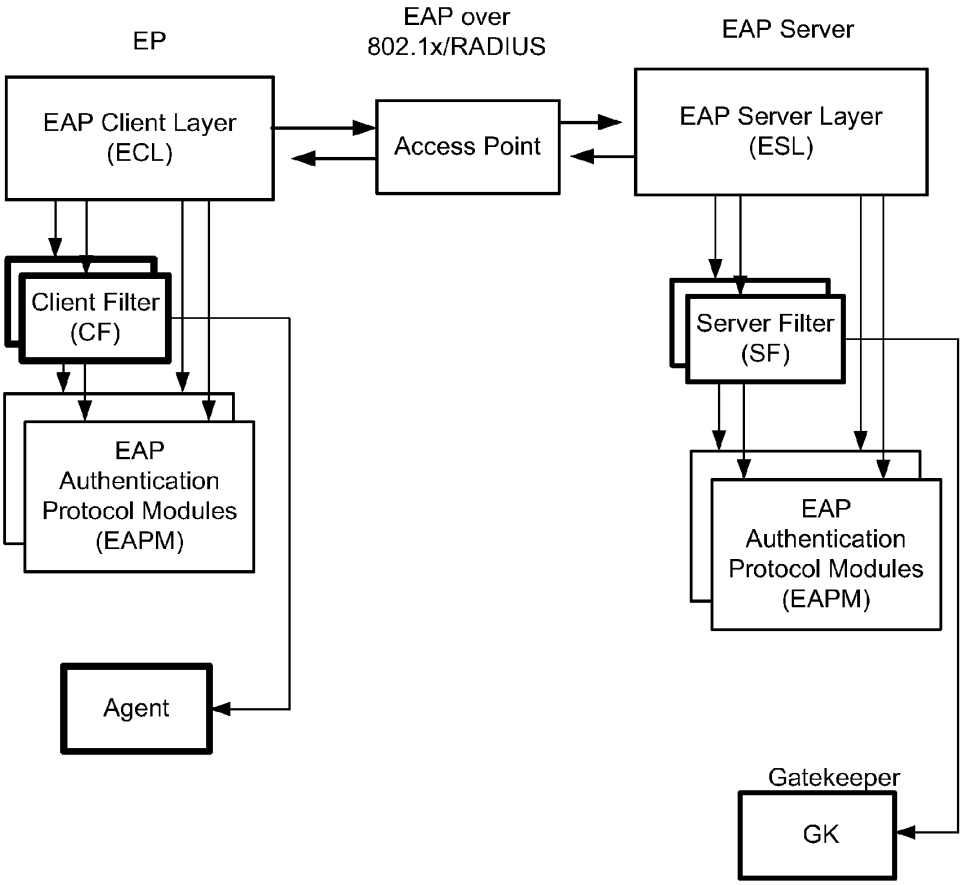
EP
EAP over
802.1x/RADIUS
EAP Server
EAP Client Layer
(ECL)
Access Point
EAP Server Layer
(ESL)
Client Filter
(CF)
Server Filter
(SF)
EAP
Authentication
Protocol Modules
(EAPM)
EAP
Authentication
Protocol Modules
(EAPM)
Agent
Gatekeeper
GK

FIG. 5

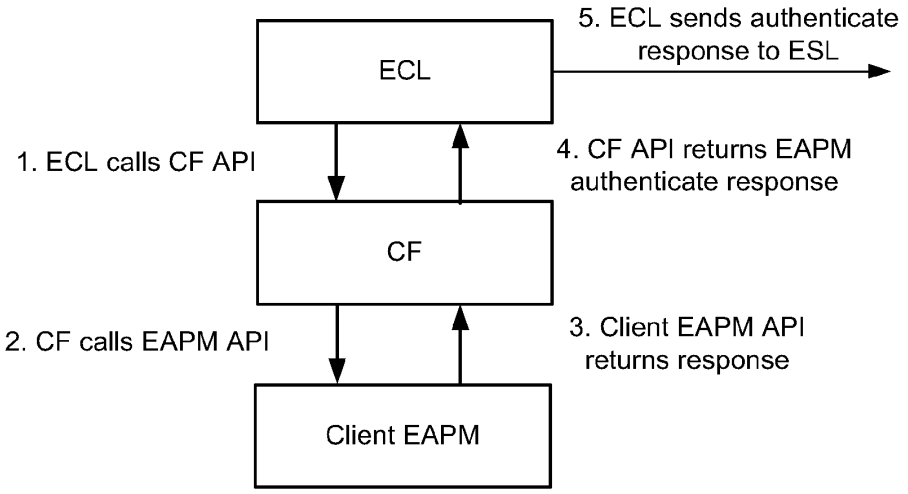
ECL
5. ECL sends authenticate response to ESL
1. ECL calls CF API
4. CF API returns EAPM authenticate response
CF
2. CF calls EAPM API
3. Client EAPM API returns response
Client EAPM

FIG. 6A

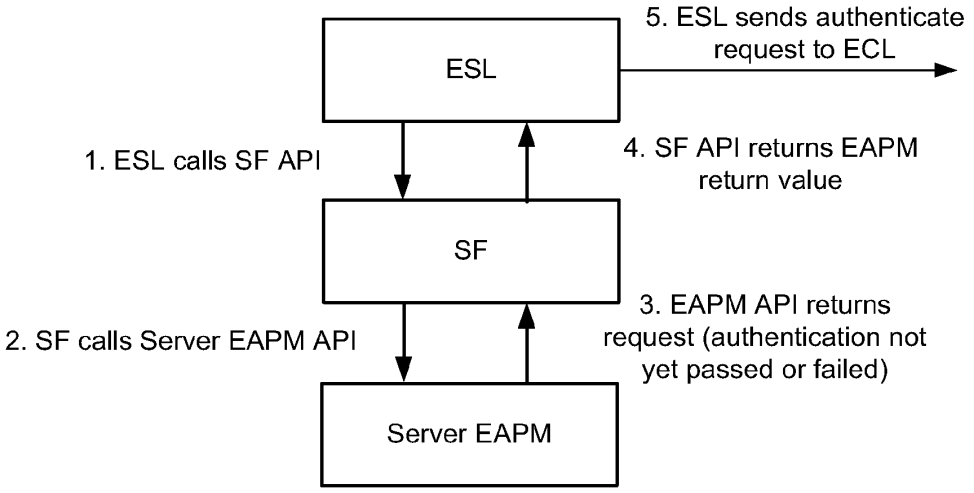
ESL
5. ESL sends authenticate request to ECL
1. ESL calls SF API
4. SF API returns EAPM return value
SF
2. SF calls Server EAPM API
3. EAPM API returns request (authentication not yet passed or failed)
Server EAPM

FIG. 6B

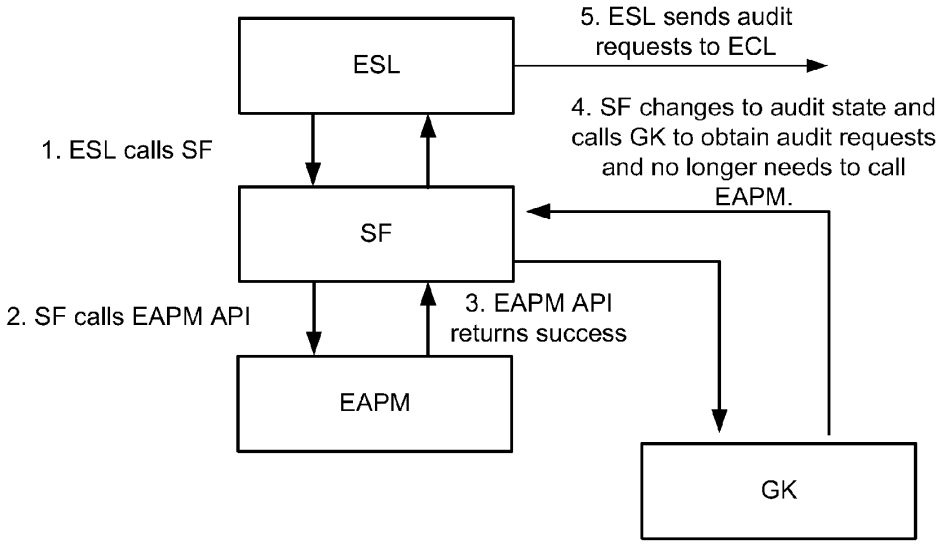
ESL
5. ESL sends audit requests to ECL
4. SF changes to audit state and calls GK to obtain audit requests and no longer needs to call EAPM.
1. ESL calls SF
SF
2. SF calls EAPM API
3. EAPM API returns success
EAPM
GK

FIG. 7

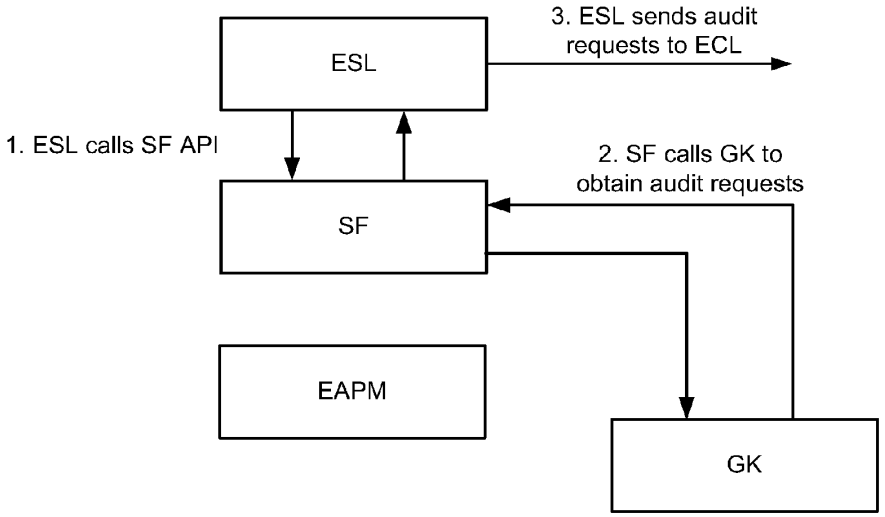
ESL
3. ESL sends audit requests to ECL
1. ESL calls SF API
2. SF calls GK to obtain audit requests
SF
EAPM
GK

FIG. 8A

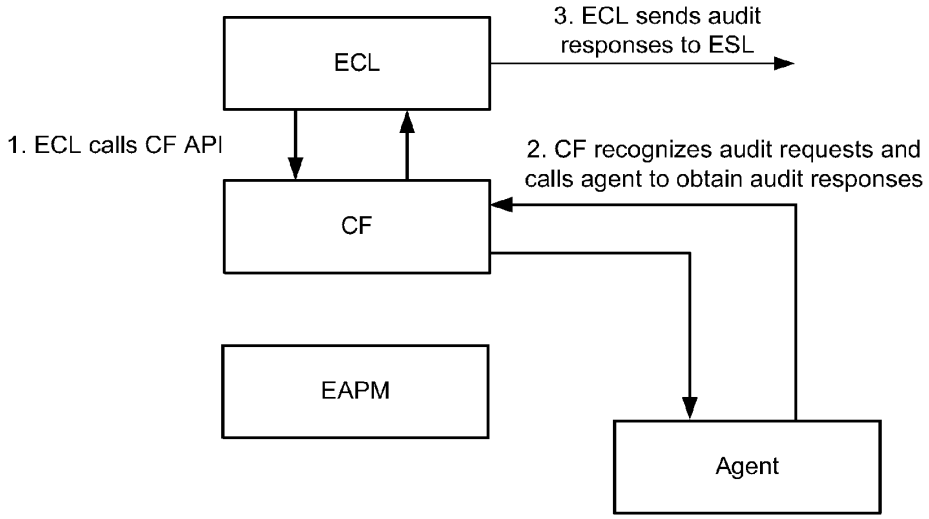
ECL
3. ECL sends audit responses to ESL
1. ECL calls CF API
2. CF recognizes audit requests and calls agent to obtain audit responses
CF
EAPM
Agent

FIG. 8B

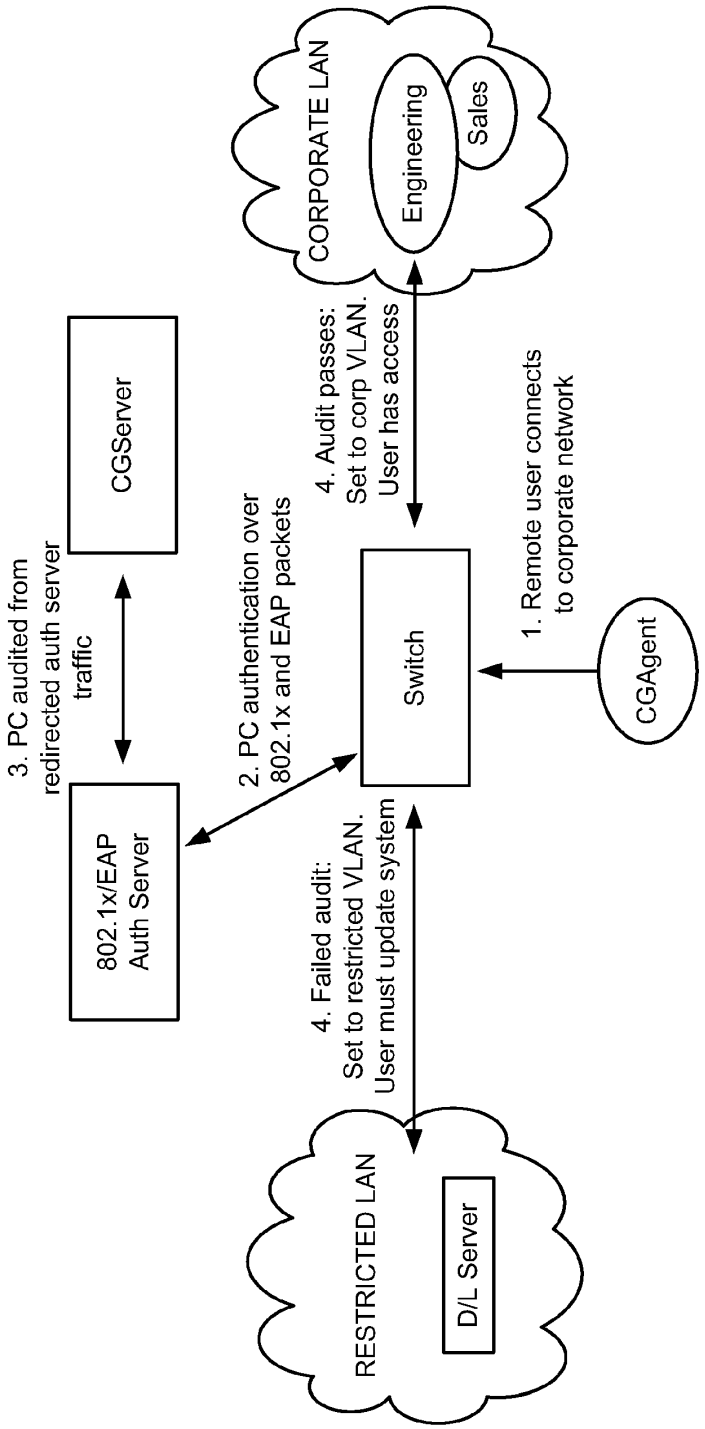
CORPORATE LAN
Engineering
Sales
4. Audit passes:
Set to corp VLAN.
User has access
CGServer
3. PC audited from
redirected auth server
traffic
2. PC authentication over
802.1x and EAP packets
Switch
1. Remote user connects
to corporate network
CGAgent
802.1x/EAP
Auth Server
4. Failed audit:
Set to restricted VLAN.
User must update system
RESTRICTED LAN
D/L Server

FIG. 9

SYSTEMS AND METHODS OF CONTROLLING NETWORK ACCESS

CROSS-REFERENCE TO RELATED APPLICATIONS

The present application is a continuation and claims the priority benefit of U.S. patent application Ser. No. 13/371,381 filed Feb. 10, 2012, which is a continuation and claims the priority benefit of U.S. patent application Ser. No. 13/157,309 filed Jun. 10, 2011, now U.S. Pat. No. 8,117,645, which is a continuation and claims the priority benefit of U.S. patent application Ser. No. 12/273,037 filed Nov. 18, 2008, now U.S. Pat. No. 8,051,460, which is a continuation and claims the priority benefit of U.S. patent application Ser. No. 10/949,179 filed Sep. 24, 2004, now U.S. Pat. No. 7,523,484, which claims the priority benefit of U.S. provisional application No. 60/513,080 filed Oct. 21, 2003 and U.S. provisional application No. 60/505,582 filed Sep. 24, 2003. The disclosures of the aforementioned applications are incorporated herein by reference.

BACKGROUND OF THE INVENTION

1. Field of the Invention

The invention is in the field of computing systems and more specifically in the field of network security.

2. Description of the Related Art

Several approaches to controlling external access to computing networks have been developed. The goals in developing these approaches include limiting access to authorized users and assuring that computing devices employed by these users do not include malicious computing code such as viruses, worms, or Trojan horses. The need for access control has grown with users' demands for accessing secure networks over the Internet and from personal devices such as laptop computers and personal digital assistants.

A first level of access control is achieved by requiring authentication of a user. This may be accomplished by requiring the user to enter a username and password or by reading a MAC address or other identifying information from an access device. In some systems, a network switch is programmed to grant access to a secure network only after proper authentication is achieved. Systems capable of using this approach include those using a proprietary VMPS protocol from Cisco Systems, Inc. of San Jose, Calif. or using a IEEE 802.1x standard protocol.

Reliance on mere user authentication includes several disadvantages. For example, there are no provisions to assure that an access device used by the authenticated user meets network security policies. The access device may have out-of-date virus software, may have security vulnerabilities, or may be otherwise compromised. Further, this approach requires that access points (e.g., network switches) support one of a specific set of access protocols. Because many access points do not support VMPS, 802.1x, or a similar protocol, implementation of this approach on a large preexisting network, such as a corporate network, may be prohibitively expensive.

A greater level of access control may be achieved by including a gatekeeper between the secure network and the access device. The gatekeeper is configured to ensure that the access device conforms to a predetermined security policy. FIG. **1** is a block diagram of a Secure Network, generally designated **100**, including two instances of a Gatekeeper **110** each associated with a different instance of an Access Point **120**. Secure Network **100** further includes, as an illustrative example, a network File Server **130**, a Network PC (personal computer) **140** and a Printer **150** included in and connected via, a local area network designated LAN **125**.

Each instance of Access Point **120** may include a large number of individual communication ports. These ports are used to connect through GateKeeper **110** to other elements within Secure Network **100** such as File Server **130** or LAN **125**. Large corporate networks may include many instances of Access Point **120**, each including hundreds of individual communication ports and being associated with an instance of GateKeeper **110**.

Some instances of Access Point **120** are capable of supporting virtual local area networks (VLANs). VLANs are generated by associating communication ports within Access Point **120** with separate virtual networks. For example, one Access Device **160** may be placed on a different VLAN than another Access Device **160** by assigning the communication ports of Access Point **120** to separate VLANs. From the point of view of these devices, the effect of a VLAN is equivalent to having a separate hardwired network.

GateKeeper **110** is configured to control access to Secure Network **100**. In addition to authenticating users who wish to access Secure Network **100** using an Access Device **160**, GateKeeper **110** is configured to ensure that Access Device **160** conforms to a predetermined security policy, before granting access to Secure Network **100**. For example, GateKeeper **110** may make certain that Access Device **160** has up-to-date virus software and encryption protocols as proscribed by the security policy. Once GateKeeper **110** has verified that Access Device **160** satisfies the security policy, Access Device **160** is allowed to communicate through GateKeeper **110** to LAN **125**.

A disadvantage of the use of GateKeeper **110**, as practiced in the prior art, is that all communications between Access Device **160** and LAN **125** pass through GateKeeper **110**. For large networks including many instances of Access Point **120**, each of which may include many communication ports, this can be a significant burden. The use of one instance of GateKeeper **110** to support numerous instances of Access Device **160** is limited by bandwidth and required sophistication (e.g., cost) of GateKeeper **110**. It is undesirable for GateKeeper **110** to become a limiting factor on the bandwidth of communication between instances of Access Device **160** and Secure Network **100**. Further, the use of a separate GateKeeper **110** for each instance of Access Device **160** or Access Point **120** is often prohibitively expensive. Even if a separate GateKeeper is used for each Access Point **120**, there is no isolation between compliant and non-compliant Access Devices **160** which are attached to the same Access Point **120**.

There is, therefore, a need for improved systems and methods of controlling access to secure networks.

SUMMARY OF THE CLAIMED INVENTION

Systems and methods of the invention include a protected network physically or logically divided into a restricted subset and one or more less-restricted subsets. Requests from an access device for access to the less-restricted subset are first passed to the restricted subset. Elements (e.g., a gatekeeper) of the restricted subset are then used to apply security policies to the access device and if security policies are satisfied, the access device is granted access to a less-restricted subset of the protected network. The passing of access requests to the restricted subset and granting of access are accomplished by configuring and reconfiguring a communication port of an access point. After access is granted, further communication

between the access device and the protected network can include access to the less restricted subset.

Typically, the less-restricted subset of the protected network and the restricted subset of the protected network are characterized by Virtual Local Area Networks (e.g., VLANs) defined within the access point and optionally by access control lists (ACL) of a router, firewall, or switch situated between the VLAN and the protected network. Different VLANs within the same access point, or within different access points, may be configured to characterize a plurality of restricted subsets and/or a plurality of less-restricted subsets within the protected network. A communication port of the access point is configured such that network traffic directed at the protected network is initially passed through a restricted VLAN rather than through a less-restricted VLAN. The restricted VLAN allows network traffic to pass to the restricted subset of the protected network and is typically restricted in the sense that it only allows access to elements of the protected network that are configured to communicate with an access device whose security characteristics are unknown or questionable. In contrast, the less-restricted VLAN allows access to the less-restricted subset of the protected network and, in typical embodiments, to elements of both the less-restricted subset and the restricted subset. For example, the restricted VLAN allows traffic to pass to a gatekeeper configured to receive requests for access to the less-restricted VLAN, and to determine if, and to what extent, access may be allowed. To grant access, the gatekeeper sends commands to the access point in order to reconfigure a communication port to which the access device is connected. The reconfiguration typically includes reassigning the communication port from the restricted VLAN to the less-restricted VLAN.

Subsequent to reconfiguration of the communication port, network traffic can pass from the access device through the less-restricted VLAN to elements of both the less-restricted subset and (optionally) the restricted subset. This network traffic need not pass through the gatekeeper. Thus, in various embodiments of the invention a gatekeeper is used to grant access to the less-restricted subset, and after access has been granted, most network traffic does not need to pass through the gatekeeper. For example, in some embodiments, the gatekeeper only receives requests to access the less-restricted network and data regarding access to and security of the protected network. This data may be received from administrators, access devices, access points, routers, and/or other devices on the network. These limited communications with gatekeeper occur both before and after reconfiguration of the communication port, and eliminate a significant disadvantage associated with the use of prior art gatekeepers.

Various embodiments of the invention include a computing network comprising a less-restricted subset of the computing network, access to the less-restricted subset being responsive to a first VLAN, a restricted subset of the computing network including a gatekeeper, the gatekeeper configured to receive requests for access to the less-restricted subset from an access device and to issue commands configured to allow access to the less-restricted subset, access to the restricted subset of the computing network being responsive to a second VLAN, and at least one access point including a communication port configurable for communication with the less-restricted subset or alternatively for communication with only the restricted subset, configuration of the communication port including association of the communication port alternatively with the first VLAN or the second VLAN, configuration of the communication port being responsive to the commands issued by the gatekeeper. Other elements are optional.

Various embodiments of the invention include a network gatekeeper comprising at least one security policy including requirements that must be satisfied before an access device is granted access to a less-restricted subset of a protected network, a policy auditor configured to audit an access device using the at least one security policy, in response to a request to access the less-restricted subset of the protected network, the request being sent from the access device to the gatekeeper via a communication device, and an access control configured to reconfigure the communication device such that data sent from the access device can be received by the less-restricted subset of the protected network rather than merely a restricted subset of the protected network, if the audit results in a determination that the access device meets the requirements of the at least one security policy, the restricted subset of the protected network including the gatekeeper. Other elements are optional.

Various embodiments of the invention include a method of granting access to a protected network, the method comprising receiving a request for access to a less-restricted subset of the protected network from an access device external to the protected network, the request being received through a communication port of an access point, the communication port configured for communicating between the access device and a restricted subset of the protected network, the restricted subset including a gatekeeper, applying a security policy to the access device, responsive to the request, and reconfiguring the communication port for communicating between the access device and the less-restricted subset of the protected network, if requirements of the security policy are satisfied. Other steps are optional.

Various embodiments of the invention include a method of granting access to a protected network, the method comprising receiving a first communication from an access device at a communication port, the communication port being configured to pass the first communication to a restricted subset of the protected network, the restricted subset including a gatekeeper configured to enforce security policy for access to a less-restricted subset of the protected network, receiving a command from the gatekeeper, the command being responsive to the received first communication and being configured to reconfigure the communication port to communicate data to the less-restricted subset of the protected network, configuring the communication port to communicate data to the less-restricted subset of the protected network rather than merely the restricted subset of the protected network, responsive to the received command, and receiving a second communication from the access device at the communication port, the communication port now being configured to pass the second communication to the less-restricted subset of the protected network. Other steps are optional.

Various embodiments of the invention include a computing network comprising means for dividing the computing network into a restricted subset and a less-restricted subset, means for receiving a request at the restricted subset, the request being to access the less-restricted subset, means for enforcing a security policy in response to the request, and means for allowing communication to the less-restricted subset, responsive to the enforcement of the security policy, the communication to the less-restricted subset not necessarily passing through the restricted subset. Other elements are optional.

In various embodiments of the invention the restricted subset of a computing network includes elements configured to communicate with access devices having an unknown or questionable security status, and the less-restricted subset of

the computing network includes those elements of the computing network not included in the restricted subset.

BRIEF DESCRIPTION OF THE DRAWINGS

FIG. **1** is a block diagram of a prior art computing network;

FIG. **2** is a block diagram of a protected network, according to various embodiments of the invention;

FIG. **3**A is a block diagram showing further details of an access point, router and gatekeeper of FIG. **2**, according to various embodiments of the invention;

FIG. **3**B is a block diagram showing further details of the access point, router and gatekeeper of FIG. **2**, after access has been granted to a less-restricted subset of a protected network, according to various embodiments of the invention; and

FIG. **4** is a flowchart illustrating a method of granting access to a protected network, according to various embodiments of the invention.

FIG. **5** is a block diagram showing EAP over 802.1x/Radius.

FIG. **6**A is a block diagram showing a client in authentication state.

FIG. **6**B is a block diagram showing a server in authentication state.

FIG. **7** is a block diagram showing a server changing to audit state.

FIG. **8**A is a block diagram showing a server in audit state.

FIG. **8**B is a block diagram showing a client responding to audit requests.

FIG. **9** is a block diagram showing a system in 802.1x mode where normal traffic does not traverse CGS.

DETAILED DESCRIPTION

Access to a protected computing network is controlled by manipulating a communication port within an access point. When an access request is first received, the communication port is configured to pass the request to a restricted subset of a protected computing network. This restricted subset includes a gatekeeper configured to administer a security policy governing access to those parts of the protected computing network that are not part of the restricted subset. Those parts of the protected computing network that are not part of the restricted network are considered to be in a less-restricted subset. The less-restricted subset being less restricted relative to the restricted subset in terms of what elements may be included in each subset. If the device requesting access satisfies requirements of the security policy, then the gatekeeper sends commands to the access point in order to reconfigure the communication port through which the access request was received. The communication port is reconfigured such that further communication from the access device is passed to the less-restricted subset as well as, optionally, the restricted subset. In some embodiments, the less-restricted subset and the restricted subset are characterized by VLANs defined within the protected network.

FIG. **2** is a block diagram of a Protected Network **200**, according to various embodiments of the invention. Protected Network **200** is either physically or logically divided into a Restricted Subset **205** and a Less-Restricted Subset **210**. Access to Protected Network **200** is possible through an Access Point **215** (a communication device) and an optional Router **220**. As is described further herein this access is under the control of a GateKeeper **225**. GateKeeper **225** is configured to enforce a security policy against one or more Access Device **230** requesting access to Less-Restricted Subset **210**. Typically, Less-Restricted Subset **210** and Restricted Subset **205** are characterized by VLAN settings within Access Point **215**. Access Device **230** and Access Point **215** are connected by a communication channel such as a cable, the Internet, a telephone network, other computing network, and/or the like. In some embodiments, a network access server (not shown) is included between Access Device **230** and Access Point **215**.

In various embodiments, Protected Network **200** includes a corporate network, telephone network, private network, local area network, wide area network, wireless network, communication network, government network, university network, and/or the like. Restricted Subset **205** is a subset of Protected Network **200** including at least GateKeeper **225**. In some embodiments, Restricted Subset **205** further includes a DHCP (dynamic host configuration protocol service) **260** configured to assign and manage network addresses, and/or an Update Module **255** configured for providing security updates to Access Device **230**. For example, in one embodiment, Restricted Subset **205** includes a server configured to function as DHCP **260** and a server configured to function as GateKeeper **225**. In one embodiment, Restricted Subset **205** includes a single computing device configured to function as both Update Module **255** and GateKeeper **225**.

Less-Restricted Subset **210** includes those elements of Protected Network **200** not included in Restricted Subset **205**. Less-Restricted Subset **210** optionally includes devices such as a File Server **235**, a Network PC **240**, a Printer **245**, or the like. In some embodiments, Protected Network **200** includes elements having a hierarchy of access restrictions. For example, access to Network PC **240** may require a higher level of authority than access to File Server **235**. In this case, as described further herein, access control lists within Router **220** are optionally used to independently control access to specific devices within Less-Restricted Subset **210**. Protected Network **200** may be large, including tens, hundreds, or thousands of devices. The hierarchy of access restrictions may be enforced by a hierarchical set of security policies defined using Policy Manager **250**. In various embodiments, Router **220** and Access Point **215** may be considered part of Restricted Subset **205** or Less-Restricted Subset **210**.

GateKeeper **225** is configured to enforce one or more security policies against an instance of Access Device **230** attempting to access Protected Network **200**. The security polices may include requirements for user identification such as user names and passwords, configuration requirements relating to the configuration of Access Device **230**, application requirements relating to applications running on Access Device **230**, or the like. For example, in one embodiment GateKeeper **225** is configured to enforce a security policy that requires a user of Access Device **230** to provide a username and password, requires Access Device **230** to be running an operating system with specific security patches installed, requires that Access Device **230** not be connected to any insecure devices, and requires that Access Device **230** have current antivirus software installed.

In some embodiments, GateKeeper **225** is configured to enforce several alternative security policies having different levels of requirements, and to determine which security policy to enforce based on the identity of Access Device **230**, the identity of a user of Access Device **230**, those elements of Less-Restricted Subset **210** to which access is requested, and/or the like. For example, a request to access File Server **235** may have to satisfy a security policy that includes scanning Access Device **230** for malicious code, while a request to access Printer **245** may have to satisfy a security policy that includes establishing a user identity. Security policies may be

stored on GateKeeper **225**, on Policy Manager **250**, or elsewhere accessible to Restricted Subset **205**.

In some embodiments, a single instance of GateKeeper **225** is configured to manage access through more than one Access Point **215** and/or to manage access to more than one Protected Network **200**. As is described further herein, management of Access Point **215** is accomplished by configuring and reconfiguring one or more communication ports within Access Point **215**, and optionally setting access control lists within Router **220**. In some embodiments Protected Network **200** includes a plurality of Access Point **215**, a plurality of GateKeeper **225** and/or a plurality of Restricted Subset **205**. Further details of GateKeeper **225** and Access Point **215** are discussed below.

Access Device **230** is a computing device configured to operate as an end point (EP) in a communication channel including Access Point **215** and Access Device **230**. In various embodiments, Access Device **230** is a personal computer, a personal digital assistant, a telephone, a wireless device, a communication device such as a router, Ethernet card, wireless card, another access point, a network device, or the like. Access Device **230** is optionally identified by a MAC address, by a cookie, by data stored on Access Device **230**, by a user name, an IP address, a network address, or the like.

In some embodiments, Access Device **230** is configured to execute a software and/or hardware agent for communicating with GateKeeper **225**. For example, in one embodiment, Access Device **230** includes an agent configured to monitor code running on Access Device **230** and report any suspicious code to GateKeeper **225**. In another example, Access Device **230** may include software and/or hardware configured to monitor other devices connected to Access Device **230** and to report information about these devices (e.g., their security statuses or MAC addresses) to GateKeeper **225**.

Policy Manager **250** is configured to centrally create, update, and distribute security policies enforced by one or more GateKeeper **225**. For example, in various embodiments, Policy Manager **250** is configured to manage passwords, to specify access privileges, to specify requirements of security policies, or the like. In some embodiments, Policy Manager **250** is configured to establish several security policies and to specify conditions under which each of the security policies should be used. For example, a security policy may be selected for use responsive to a device type of Access Device **230** and/or the elements of Protected Network **200** to which access has been requested.

Update Module **255** is configured for remotely modifying Access Device **230**, or a device connected to Access Device **230**, in order to improve compliance with a security policy. For example, if it is found that Access Device **230** includes out-of-date antivirus software, then Update Module **255** may facilitate updating of the antivirus software on Access Device **230**. In some embodiments, Update Module **255** is configured to update an agent executing on Access Device **230**. Update Module **255** is optionally included in Less-Restricted Subset **210** or external to Protected Network **200**. Update Module **255** optionally operates responsive to a security policy and/or to GateKeeper **225**.

FIG. **3**A is a block diagram showing further details of Access Point **215**, Router **220** and GateKeeper **225**, according to various embodiments of the invention. Access Point **215** is, for example, a network switch, a wireless access point, a remote access virtual private network (VPN), secure socket layer VPN, firewall, or the like. When embodied in a network switch, Access Point **215** includes a series of communication ports, designated Ports **305**A-**305**G and configured for communication with devices such as Access Device **230**, Router **220**, Less-Restricted Subset **210** and/or Restricted Subset **205**.

Communication received at one member of Ports **305**A-**305**G is directed internally to another member of Ports **305**A-**305**G via a member of VLANs **310**A-**310**D. VLANs **310**A-**310**D are logical associations between members of Ports **305**A-**305**G. Typically, any members of Ports **305**A-**305**G that are configured to be associated with the same member of VLANs **310**A-**310**D are in bi-directional communication with each other. These associations are illustrated in FIGS. **3**A and **3**B by Lines **315**. For example, with Ports **305**A-**305**G configured as shown in FIG. **3**A, communication from Access Device **230** and received at Port **305**A is directed to Port **305**F because Port **305**A and Port **305**F are both associated with VLAN **310**C. (In some embodiments of Access Point **215**, a member of VLANs **310**A-**310**D may be configured such that some members of Ports **305**A-**305**G, even if associated with the same VLAN, are hidden from each other. For example, in these embodiments, both Ports **305**A and **305**B may be in communication with Port **305**F but not with each other.)

The associations between members of Ports **305**A-**305**G and VLANs **310**A-**310**D are controlled by Switch Logic **317** which is accessible to other devices, for example through Port **305**G. Switch Logic **317** is configured for configuring and reconfiguring members of Ports **305**A-**305**G responsive to received commands. For example, by receiving an appropriate command, Switch Logic **317** is configured to reconfigure Port **305**A to be associated with VLAN **310**A, as illustrated in FIG. **3**B below. In this configuration, data received at Port **305**A is directed to Port **305**D via VLAN **310**A, rather than to Port **305**F.

As is discussed further below, the commands received by Switch Logic **317** may be generated by GateKeeper **225**. This communication between GateKeeper **225** and Switch Logic **317** may be accomplished using SNMP (Simple Network Management Protocol), telnet, SSH (Secure Shell), RADIUS (Remote Authentication User Dial-In Service), EAP (Extensible Authentication Protocol), or the like.

In some embodiments, Switch Logic **317** includes a memory (not shown) configured to store the status of Ports **305**A-**305**G and/or identification data regarding Access Device **230**. This identification data may include, for example, MAC addresses, IP (internet protocol) addresses, or other data that may be used to identify Access Device **230** or data sent by Access Device **230**.

Data passed through members of Ports **305**D-**305**G are received by Router **220** and may be communicated to other elements of Protected Network **200** responsive to access control lists (ACL **340**A-**340**D) associated with Ports **335**A-**335**D of Router **220**. ACL **340**A through **340**D are each communication filters that deny or allow communication to be passed to specific elements or sets of elements within Protected Network **200**. For example, ACL **340**C may be an access control list that specifically allows communication to network addresses used by GateKeeper **225** and DHCP **260**, and blocks communication to all other network addresses. In this case, communication through Port **335**C of Router **220** would only be allowed to reach these elements of Restricted Subset **205** and would not be allowed to reach elements of Less-Restricted Subset **210**.

ACL **340**A-**340**D of Router **220** may be used to limit communication from Access Device **230** to specific elements of Protected Network **200**. For example, in the embodiments illustrated by FIG. **3**A, if ACL **340**C is configured to restrict communication to Restricted Subset **205**, and Ports **305**A-**305**C are associated with VLAN **310**C as indicated by Lines

315, then communication via these members of Ports 305A-305G will be restricted to Restricted Subset 205. In typical embodiments, at least one member of ACL 340A-340D is configured to allow communication to Restricted Subset 205 but not to Less-Restricted Subset 210. As is discussed further herein, by reconfiguring a member of Ports 305A-305C to be associated with a different member of VLANs 310A-310D, not subject to the filtering of ACL 340C, communications from Access Device 230 can be directed to elements within Less-Restricted Subset 210, and optionally Restricted Subset 205, rather than merely to Restricted Subset 205.

When Access Point 215 is embodied in a wireless access point, some or all of Ports 305A-305G may be wireless connections rather than physical ports. In these embodiments, Lines 315 may represent logical associations used to control data flow between wireless connections to Access Point 215 and/or members of Ports 305A-305G that are physical communication ports. For example, in some embodiments, MAC addresses are used to distinguish wireless communications from different instances of Access Device 230 and the logical associations (represented by Lines 315) are used to direct these communications to various output channels. The output channels may be other wireless connections or physical members of Ports 305A-305G. These logical associations may be altered by Switch Logic 317 just as associations with members of VLANs 310A-310D are modified. Therefore, the teachings herein that use a network switch as an example of Access Point 215, apply equally to wireless access points.

Switch Logic 317 is controlled by an Access Control 320 included in GateKeeper 225. Access Control 320 is configured to send commands to Switch Logic 317 in order to reconfigure members of Ports 305A-305G. This reconfiguration includes modifying the association of members of Ports 305A-305G with different members of VLANs 310A-310D. In some embodiments, as described further herein, Access Control 320 is also configured to read a status of members of Ports 305A-305G and/or device identification data from Switch Logic 317.

Access Control 320 is responsive to a Policy Auditor 325 included in GateKeeper 225. Policy Auditor 325 is configured to receive a request for access to Less-Restricted Subset 210 from Access Device 230, to determine which of Security Policy 330A or optional Security Policy 330B applies to the current request, to perform a security audit of Access Device 230 based on the appropriate member of Security Policies 330A-330B, and to notify Access Control 320 if the audit is passed. This notice typically causes Access Control 320 to reconfigure a member of Ports 305A-305G using Switch Logic 317. For example, in some embodiments, if Security Policy 330A applies and if Access Device 230 satisfies requirements of Security Policy 330A, then Policy Auditor 325 provides a notice to Access Control 320. In response, Access Control 320 sends appropriate commands to Switch Logic 317. These commands cause changes in Port 305A, such that communication from Access Device 230 is no longer blocked by ACL 340C and can now be received by elements of Less-restricted Subset 310. In alternative embodiments, Security Policies 330A-330B are stored elsewhere in Protected Network 200 accessible to Policy Auditor 325. Restricted Subset 205 optionally includes one, two, or more security policy, such as Security Policies 330A-330B.

FIG. 3B is a block diagram showing further details of Access Point 215, Router 220 and GateKeeper 225 of FIG. 2, after access has been granted to elements of Less-Restricted Subset 210, according to various embodiments of the invention. Port 305A has been reconfigured to be associated with VLAN 310A rather than VLAN 310C. Because VLAN 310A is communicatively coupled to Port 305D and Port 335A (of Router 220) via ACL 340A, any communication received at Port 305A from Access Device 230 is now subject to the filtering effects of ACL 340A rather than ACL 340C. If ACL 340A allows communication to network addresses associated with one or more elements of Less-Restricted Subset 210, the above reconfiguration of Port 305A results in a granting of access to Less-Restricted Subset 210 from Access Device 230. In some embodiments, if ACL 340A is configured to allow access to members of Less-Restricted Subset 210 it is also configured to allow access to members of Restricted Subset 205. Once Port 305A has been reconfigured to be associated with VLAN 310A, future general network traffic between Access Device 230 and Less-Restricted Subset 210 may pass through Ports 305A, 305D and 335A without passing through GateKeeper 225 or other elements of Restricted Subset 205. Further, communication related to access to security of Protected Network 200 may still be received by GateKeeper 225 via Port 305A. For example, GateKeeper 225 may still receive control traffic such as DNS lookups or DHCP requests, or requests to access additional elements of Protected Network 200, or requests to continue to access the Less-Restricted Subset 210.

In some embodiments, members of VLAN 310A-310D and ACL 340A-340D are optionally used to grant or bar access to different subsets of Protected Network 200, Less-Restricted Subset 210, or Restricted Subset 205. For example, ACL 340B may be configured to grant access to File Server 235, Policy Manager 250 and GateKeeper 225. In this case, associating a member of Ports 305A-305C with VLAN 310B may provide access to these devices from an instance of Access Device 230. Granting of access to a specific region of Less-Restricted Subset 210 is optionally responsive to which member of Security Policies 330A-330B has been satisfied.

FIG. 4 is a flowchart illustrating a method of granting access to Less-Restricted Subset 210 (FIG. 2), according to various embodiments of the invention. In these embodiments, an Update Port Log Step 410 and a Restrict Port Step 420 are used to prepare an open (unused) communication port on Access Point 215 for receiving a request for access to Less-Restricted Subset 210. This request is received from Access Device 230 in a Receive Access Request Step 430. In response, GateKeeper 225 authenticates a user, obtains audit data, and applies a security policy in an Authenticate User Step 440, an Obtain Audit Data Step 450 and an Apply Security Policy Step 460, respectively. If the security policy is satisfied, then in a Reconfigure Port Step 470, GateKeeper 225 reconfigures the communication port of Access Point 215 to which Access Device 230 has connected. Finally, the reconfigured communication port is used to pass communication between Access Device 230 and one or more element of Less-Restricted Subset 210 in a Communicate Step 480. Further details of these steps are discussed herein.

In Update Port Log Step 410, Access Control 320 reads port configuration data from Access Point 215 to determine the current configuration of Ports 305A-305G. If any of Ports 305A-305G have been configured by an administrator of Access Point 215, then in Update Port Log Step 410 the administrator specified configuration(s) are stored for later use during Reconfigure Port Step 470. Typically, the read configuration data is stored in a port configuration table, for example within GateKeeper 225. Update Port Log Step 410 is optional, as discussed further herein.

In Restrict Port Step 420, Access Control 320 configures those members of Ports 305A-305G that may be accessed by external devices, such as Access Device 230. These communication ports are configured to be associated with VLAN

310C such that any data (e.g., communications) they receive from external devices are directed to Port 305F and, thus, to subject to ACL 340C. ACL 340C is configured to allow communication to, for example, DHCP 260 and GateKeeper 225. As a result, any requests for access received from external devices are prevented from reaching Less-Restricted Subset 210 and instead are received by elements of Restricted Subset 205. Restrict Port Step 420 results in a configuration such as that illustrated in FIG. 3A. In this configuration, those members of Ports 305A-305G that may be accessed by external devices include Port 305A, Port 305B and Port 305C. As a result of Restrict Port Step 420, these members of Ports 305A-305G are associated with VLAN 310C and communicatively coupled to Protected Network 200 through ACL 340C. Restrict Port Step 420 is optional, for example when members of Ports 305A-305C have been configured to communicate data to elements of Restricted Subset 205 by an administrator of Access Point 215.

In Receive Access Request Step 430, a request for access to Less-Restricted Subset 210 is received at one of Ports 305A-305C configured to pass data to DHCP 260 and Gatekeeper 225. Typically, this request is received from an external device such as Access Device 230. Because Port 305A, Port 305B and Port 305C are configured to pass data to DHCP 260 and Gatekeeper 225, the received access request passes through Access Point 215 and is received by either DHCP 260 or Gatekeeper 225 In typical embodiments, an initial access request is first acknowledged by DHCP 260 which assigns a dynamic network address (e.g., IP address) to Access Device 230 and returns, to Access Device 230, a network address associated with GateKeeper 225 or more specifically Policy Auditor 325. Using this network address, Access Device 230 may engage in further communication with GateKeeper 225 or Policy Auditor 325. In some embodiments, DHCP 260 and instances of GateKeeper 225 are associated with a local domain name service configured to provide network addresses associated with a particular instance of GateKeeper 225 configured to manage (reconfigure) the particular Access Point 215 to which Access Device 230 is connected.

In optional Authenticate User Step 440, Policy Auditor 325 authenticates the identity of Access Device 230 and/or a user of Access Device 230. This authentication may be required by a member of Security Policies 330A-330B. In various embodiments, the authentication may include receipt of a user name and password, receipt of a MAC address, reading of data stored on Access Device 230, communication with an agent executing on Access Device 230, or the like.

In optional Obtain Audit Data Step 450, Policy Auditor 325 collects further data to perform a security audit of Access Device 230 responsive to Security Policy 330A or Security Policy 330B. In some embodiments, Obtain Audit Data Step 450 includes sending system data requests to Access Device 230, Router 220, or Access Point 215. The requested system data may include, for example, operating system status (version, updates, etc.), antivirus software status, information concerning devices connected to Access Device 230, Windows registry information, MAC address, IP addresses, cookies, status of applications executing on Access Device 230, or the like.

In some embodiments, Obtain Audit Data Step 450 is facilitated by an agent running on Access Device 230. For example, Access Device 230 may include a software agent configured to monitor local security and to report results of this monitoring to Policy Auditor 325.

In Apply Security Policy Step 460, a security audit of Access Device 230 is performed by Policy Auditor 325 responsive to a member of Security Policy 330A or Security Policy 330B. The particular member of Security Policy 330A or Security Policy 330B used to perform the audit may be responsive to the identity of Access Device 230, an identity of a user of Access Device 230, a part of Less-Restricted Subset 210 to which access is requested, or the like. The security audit typically includes determining if Access Device 230 satisfies requirements of the security policy. The security audit optionally includes active probing, scanning, and/or collection of third party data regarding Access Device 230. In some embodiments, Authenticate User Step 440 is considered part of the security policy audit.

As is discussed further herein, in some embodiments, satisfaction of all the requirements of a particular security policy results in access to Less-Restricted Subset 210, while satisfaction of a subset of the requirements associated with the particular security policy is considered partial satisfaction of the security policy and may result in a more limited access to Less-Restricted Subset 210.

In some embodiments, Apply Security Policy Step 460 includes using Update Module 255 (FIG. 2) to overcome deficiencies in the security of Access Device 230. For example, in one embodiment, Apply Security Policy Step 460 includes updating antivirus software on Access Device 230 in response to a security audit that determined that the current antivirus software is out-of-date.

In Reconfigure Port Step 470, the communication port of Access Point 215, to which Access Device 230 is communicatively connected, is reconfigured responsive to a successful security audit in Apply Security Policy Step 460. This communication port is reconfigured such that data received by the communication port is passed to one or more elements of Less-Restricted Subset 210 rather than merely elements of Restricted Subset 205 (e.g., GateKeeper 225). For example, FIG. 3A shows Port 305A prior to execution of Reconfigure Port Step 470 and FIG. 3B shows Port 305A following execution of Reconfigure Port Step 470. In FIG. 3B, Port 305A is associated with VLAN 310A and, thus, communicatively coupled through Port 305D to Protected Network 200 subject to the restrictions of ACL 340A. The restrictions of ACL 340A allow access to all or part of Less-Restricted Subset 210, as well as optionally all or part of Restricted Subset 205.

In typical embodiments, reconfiguration of Port 305A is accomplished by sending commands from Access Control 320 to Switch Logic 317. These commands or responses to requests from Switch Logic 317 are optionally sent via SNMP, telnet, SSH, RADIUS, EAP, or the like, and are responsive to data received in Authenticate User Step 440 and Obtain Audit Data Step 450, and/or to the security audit performed in Apply Security Policy Step 460. In response to these commands, Switch Logic 317 configures Port 305A to be associated with VLAN 310A and, thus, communicate through Port 305D.

While access control lists (ACL 340A-340D) within Router 220 are typically configured prior to Receive Access Request Step 430, in some embodiments, Reconfigure Port Step 470 further includes configuring one or more members of ACL 340A-340D. In alternative embodiments, reconfiguring of members of ACL 340A-340D may be used to grant access to elements of Less-Restricted Subset 210 as an alternative to associating members of Ports 305A-305G to different members of VLANs 310A-310D.

Access Control 320 may selectively grant access to different parts of Protected Network 200 if ACL 340B is configured to allow access to different elements within Protected Network 200 than ACL 340A is configured. For example, in one embodiment, Access Device 230 will receive access to all of Less-Restricted Subset 210 if Port 305A is associated with

VLAN **310**A, or alternatively Access Device **230** will receive access to only a part of Less-Restricted Subset **210** if Port **305**A is associated with VLAN **310**B. When Port **305**A is associated with VLAN **310**A, as in FIG. **3**B, communication from Access Device **230** is directed through Port **335**A of Router **220** subject to ACL **340**A and, thus, may access only those elements of Protected Network **200** allowed by ACL **340**A. When Port **305**A is associated with VLAN **310**B, communication from Access Device **230** is instead passed through Port **335**B subject to ACL **340**B and may access only those elements of Protected Network **200** permitted by ACL **340**B. A selection between granting access to a first or second part of Protected Network **200** can, therefore, be made using Access Control **320**. The selection is optionally responsive to the security policy used in Apply Security Policy Step **460**, to whether the security policy was fully or partially satisfied, to data obtained in Authenticate User Step **440** or Obtain Audit Data Step **450**, or the like.

As illustrated in the above example, a member of Ports **305**A-**305**G, through which Access Device **230** is requesting access, may be reconfigured to more than one alternative setting in Reconfigure Port Step **470**. For example, in various embodiments a communication port may be reconfigured to a prior administrator specified configuration previously read in Update Port Log Step **410**, reconfigured to be linked to a specific port responsive to the request received in Receive Access Request Step **430**, reconfigured to grant access to a particular part of Less-Restricted Subset **210**, reconfigured to a default setting, and/or the like. By reading administrator specified port configurations in Update Port Log Step **410** and reconfiguring communication ports back to these read configurations in Reconfigure Port Step **470**, an administrator may reconfigure Protected Network **200** without concern that their specifications will be lost or permanently overwritten by methods of the invention. In embodiments wherein a communication port is not reconfigured to a previous administrator specified configuration, Update Port Log Step **410** is optional.

In Communicate Step **480**, communication occurs between Access Device **230** and elements of Less-Restricted Subset **210** via the communication port reconfigured in Reconfigure Port Step **470**. However, in some embodiments, ACL **340**A is configured to allow access to GateKeeper **225** as well as Less-Restricted Subset **210**. Thus, general network traffic does not need to pass through GateKeeper **225**, while communication regarding security of Protected Network **200** is optionally received by GateKeeper **225**. Further communication between Access Device **230** and GateKeeper **225** may provide a variety of advantages. For example, further communication between GateKeeper **225** and an agent executing on Access Device **230** may allow for continuing audits of security aspects of Access Devices **230**. These audits may be similar to those performed in Apply Security Policy Step **460**. In one embodiment, ACL **340**A is configured to grant access to all of Protected Network **200**.

Further communication between GateKeeper **225** and an agent executing on Access Device **230** may also allow for a user of Access Device **230** to explicitly logoff Protected Network **200**. An explicit logoff will result in reconfiguration of Port **305**A such that access is again restricted to Restricted Subset **205**. A logoff may alternatively be responsive to a timeout of communication with Access Device **230**, a SNMP trap message indicating a connection has been broken, or the like.

According to embodiments like that disclosed in U.S. Provisional Patent Application No. 60/513,080, the disclosure of which has been incorporated herein by reference, an AP (e.g., a switch or wireless access point (WAP) which is used to connect end points to the corporate network) may be programmed to prohibit access by the PC (e.g., notebook, desktop PC, PDA, or similar computing device) to the corporate network until authentication with the authentication server passes AND an audit with the software agent with the GK (e.g., software that acts as a gatekeeper by granting or denying access to the corporate network from end points after auditing the end point based on certain criteria) passes, while still supporting the existing encryption and authentication functionality. The method used to support auditing functionality over the existing 802.1x protocol implementation is complicated and not an obvious variation of the 802.1x protocol. According to an embodiment like that disclosed in U.S. Provisional Patent Application No. 60/513,080, the disclosure of which has been incorporated herein by reference, the auditing protocol takes place between the EP (e.g., end point which can either be a PC or network device) agent software and the GK. A client filter redirects calls for audit information to an agent on the EP and sends the responses to the 802.1x compliant AP which relays them to the EAP server. The EAP server then calls a server filter which sends the responses to the GK for evaluation. The GK sends requests for more information on the reverse path and this continues until the audit is completed. If the audit is successful, the server sends a message to the AP which enables the EP's port allowing access for the PC. If the audit fails, the port on the AP is left disabled.

According to an exemplary embodiment, client filters (CF) and server filters (SF) are added along with an agent and GK to perform audits, as highlighted in FIG. **5**. There may be one or more instances of the CF and SF, which correspond to the separate EAP Authentication Modules (EAPM) that are supported. Note that the agent and GK are logical components. The functionality of the agent and GK can be embedded into the CF and SF, respectively, or in the case of the GK, may reside on a separate server.

The CF and SF APIs have APIs which correspond to the EAPM APIs. Therefore, the EAP Client Layer (ECL) or EAP Server Layer (ESL) can call the CF and SF instances corresponding to a particular authentication method as shown in FIGS. **6**A and **6**B. To the ECL and ESL, each instance of the CF and SF appears to be an EAPM which incorporates the functionality of the original EAPM prior to completion of the success response by the server EAPM.

To use the invention as disclosed in U.S. Provisional Patent Application No. 60/513,080, the disclosure of which has been incorporated herein by reference, the ECL and ESL are configured to use the instance of the CF and SF corresponding to the desired authentication method. This authentication method corresponds to an authentication method supported by one of the EAPMs.

The ECL calls the corresponding CF to perform authentication, which at first calls the appropriate EAPM to obtain the proper authentication response. The authentication response is returned by the CF to the ESL, which sends the response to the server's ESL, SF, and EAPM. This process continues until the authentication either succeeds or fails, at which time the server's authentication EAPM returns a success or failure response to the SF.

If the SF receives a success response from the server EAPM as shown in FIG. **7**, the SF changes to the audit state and calls GK to obtain audit requests to send back to the client. In this state, the SF returns specially formatted audit requests to the ESL which are passed to the ECL, and eventually to the CF which sends back audit responses to the SF requests.

On the client, audit requests are passed to the agent API instead of to the client EAPM. The agent returns information about the local system, which is converted to audit responses that are sent to the server.

During the audit state, the SF and CF exchange audit requests and responses about the EP as shown in FIGS. **8**A and **8**B. The ECL and ESL continue to communicate with the CF and SF, but instead of calling the EAPM, the CF and SF call the agent and GK respectively, to perform this exchange. The audit session continues until the necessary audit information has been passed to the SF.

If the audit indicates the client EP is in compliance, the SF returns a success response. If the VLAN for the EP is specified in the policy, then the VLAN that should be used for this EP is passed back as well.

If the GK determines that the EP has failed the audit, GK returns a failure response to SF which causes one of the following: (1) the SF returns a failure to ECL, and the corresponding port on the AP is left disabled, or (2) the SF returns a success response to the ECL but specifies that the EP should be set to a restricted VLAN where the EP has limited network access. In either case, the EP is isolated from the company network until it successfully passes an audit with the GK.

After the audit has been performed, "keep alives" and updates regarding changes to previous audit information are exchanged. Changes are reevaluated and if inconsistent with the current state, access to the network is modified appropriately by changing the VLAN used for the EP or by terminating access by the EP by communicating with the AP.

Several embodiments are specifically illustrated and/or described herein. However, it will be appreciated that modifications and variations are covered by the above teachings and within the scope of the appended claims without departing from the spirit and intended scope thereof. For example, the teachings herein may be applied to embodiments wherein Access Point **215** is a wireless access point and MAC addresses, or the like, are used instead of VLANs to separate traffic from different instances of Access Device **230**. It is, thus, anticipated that network management techniques other than VLANs may be used to distinguish Less-Restricted Subset **210** from Restricted Subset **205**. In some embodiments, various aspects of GateKeeper **225** may be incorporated into Access Point **215** and/or Router **220**. GateKeeper **225** and Policy Manager **250** are each optionally implemented on a plurality of computing devices within Restricted Subset **205**.

In some embodiments, GateKeeper **225** uses DHCP **260** to assign IP addresses from a restricted IP address range depending on the compliance of Access Device **230** to security policies **330**A-**330**B. GateKeeper **225** inserts DHCP options and/or modifies the IP source addresses of DHCP-DISCOVER and DHCPREQUEST packets, based on the compliance of the Access Device **230** to security policies **330**A-**330**B. DHCP **260** is configured to provide an address from the restricted address range or the less-restricted address range based on the source address and/or options present in the DHCP request or discover packets that have been modified by GateKeeper **225**. In some embodiments, the insertion of DHCP options and/or modification of IP source addresses may be used to characterize restricted and less-restricted subnets, rather then configuring port associations with VLANs as discussed herein.

The embodiments discussed herein are illustrative of the present invention. As these embodiments of the present invention are described with reference to illustrations, various modifications or adaptations of the methods and or specific structures described may become apparent to those skilled in the art. All such modifications, adaptations, or variations that rely upon the teachings of the present invention, and through which these teachings have advanced the art, are considered to be within the spirit and scope of the present invention. Hence, these descriptions and drawings should not be considered in a limiting sense, as it is understood that the present invention is in no way limited to only the embodiments illustrated.

What is claimed is:

1. A method for auditing a device, the method comprising:

performing an authentication using an EAP protocol from the device, the device being connected via a computer network to an access point configured to use an 802.1x protocol;

sending a request for audit data to an agent running on the device;

receiving the audit data at a gatekeeper configured to control access to a network, from the agent, the audit data pertaining to the device and having been obtained by the agent;

applying a security policy that includes at least one requirements pertaining to the audit data and at least one requirement pertaining to the authentication, the applying of the security policy taking place under control of the gatekeeper.

2. The method of claim **1**, wherein applying the security policy includes configuring the access point.

3. The method of claim **2**, wherein configuring the access point includes assigning an access control list.

4. The method of claim **2**, wherein configuring the access point includes assigning a VLAN.

5. The method of claim **2**, further comprising receiving, from the agent, updated audit data pertaining to the device after configuring the access point.

6. The method of claim **2**, further comprising receiving, from the agent, updated audit data pertaining to the device while the device has access to a less-restricted subset of the network.

7. The method of claim **2**, further comprising continuing to receive at the gatekeeper, from the agent, audit data pertaining to the device after the configuring of the access point.

8. The method of claim **1**, wherein receiving the audit data includes the use of the EAP protocol.

9. The method of claim **1**, wherein sending the authentication includes obtaining a password from a user of the device.

10. The method of claim **1**, wherein the request includes a request for audit data pertaining to an application.

11. The method of claim **1**, wherein the received audit data includes audit data that pertains to an application on the device.

12. The method of claim **1**, wherein the received audit data includes information that concerns operating system of the device.

13. The method of claim **1**, wherein the received audit data includes information that concerns antivirus software on the device.

14. The method of claim **1**, wherein the received audit data includes information that concerns other devices coupled to the device.

15. The method of claim **1**, wherein the security policy includes at least one requirement based on information about the device obtained from a third party.

16. The method of claim **1**, wherein the security policy is based at least in part on information concerning the identity of a user of the device.

17. The method of claim **1**, wherein the gatekeeper is configured to take part in bringing a software on the device up to date in response to applying the security policy.

18. The method of claim **1**, wherein the gatekeeper is configured to take part in facilitating updates to a software the agent to the device.

19. The method of claim **1**, wherein the received audit data pertains to a logoff by a user of the device.

20. The method of claim **1**, wherein the audit data characterizes a current state of the device.

21. The method of claim **1**, wherein the authentication is of a user of the device.

22. A method for auditing a device, the method comprising:

performing an authentication using an EPA protocol from the device, the device being connected to an access point configured to use an 802.1x protocol;

sending a request for audit data to an agent running on the device;

receiving the audit data at a gatekeeper configured to control access to a network, from the agent, the audit data pertaining to the device and having been obtained by the agent;

applying a security policy that includes at least one requirements pertaining to the audit data and at least one requirement pertaining to the authentication, the applying of the security policy taking place under control of the gatekeeper, where applying the security policy includes configuring the access point;

receiving, from the agent, updated audit pertaining to the device while the device has access to a less-restricted subset of the network; and

re-auditing the device in accordance to the security policy using the received updated audit data.

* * * * *