US007415074B2

(12) **United States Patent**
Seto et al.

(10) **Patent No.: US 7,415,074 B2**
(45) **Date of Patent: Aug. 19, 2008**

(54) **MIMO TRANSMISSION AND RECEPTION METHODS AND DEVICES**

(75) Inventors: **Ichiro Seto**, Fuchu (JP); **Tsuguhide Aoki**, Kawasaki (JP); **Hiroshi Yoshida**, Yokohama (JP)

(73) Assignee: **Kabushiki Kaisha Toshiba**, Tokyo (JP)

(*) Notice: Subject to any disclaimer, the term of this patent is extended or adjusted under 35 U.S.C. 154(b) by 647 days.

(21) Appl. No.: **11/016,808**

(22) Filed: **Dec. 21, 2004**

(65) **Prior Publication Data**

US 2005/0163244 A1 Jul. 28, 2005

(30) **Foreign Application Priority Data**

Jan. 9, 2004 (JP) 2004-004848

(51) **Int. Cl.**

H04K 1/10	(2006.01)
H04L 27/28	(2006.01)
H04L 1/02	(2006.01)
H04B 7/02	(2006.01)

(52) **U.S. Cl.** **375/260**; 375/267

(58) **Field of Classification Search** ..... None
See application file for complete search history.

(56) **References Cited**

U.S. PATENT DOCUMENTS

5,497,398	A *	3/1996	Tzannes et al.	375/260
6,917,311	B2 *	7/2005	Hosur et al.	341/50
6,985,434	B2 *	1/2006	Wu et al.	370/208
2004/0005018	A1 *	1/2004	Zhu et al.	375/340
2005/0163244	A1	7/2005	Seto et al.	
2005/0180313	A1 *	8/2005	Kim et al.	370/208
2005/0180515	A1 *	8/2005	Orihashi et al.	375/260
2007/0153928	A1 *	7/2007	Liu et al.	375/260

FOREIGN PATENT DOCUMENTS

JP	2000-236313	8/2000
JP	2001-148676	5/2001
WO	WO 01/71928 A2	9/2001

OTHER PUBLICATIONS

U.S. Appl. No. 11/201,385, filed Aug. 8, 2005, Aoki.
U.S. Appl. No. 11/087,601, filed Mar. 24, 2005, Aoki.
U.S. Appl. No. 11/076,051, filed Mar. 10, 2005, Aoki et al.
U.S. Appl. No. 11/018,251, filed Dec. 22, 2004, Aoki et al.
U.S. Appl. No. 11/016,808, filed Dec. 21, 2004, Seto et al.
U.S. Appl. No. 11/132,279, filed May 19, 2005, Aoki.
U.S. Appl. No. 11/132,376, filed May 19, 2005, Aoki et al.
Jan Boer, et al., "Backwards compatibility", ftp://ieee: wireless@ftp.802wirelessworld.com, IEEE 802.11-0714r0, Sep. 2003, 7 Pages.
Yasutaka Ogawa, et al., "A MIMO-OFDM System for High-Speed Transmission", Vehicular Technology Conference on , USA, vol. 1, Oct. 9, 2003, pp. 493-497.

* cited by examiner

Primary Examiner—Shuwang Liu
Assistant Examiner—Gina McKie
(74) *Attorney, Agent, or Firm*—Oblon, Spivak, McClelland, Maier & Neustadt, P.C.

(57) **ABSTRACT**

In a wireless transmitting device which performs transmission by an OFDM using a plurality of subcarriers orthogonal to each other, a plurality of preambles to which a plurality of different subcarrier groups selected from a plurality of subcarriers within an OFDM signal band are allocated are transmitted by using a plurality of transmit antennas, and data is transmitted by using the antennas after the preambles are transmitted.

4 Claims, 11 Drawing Sheets

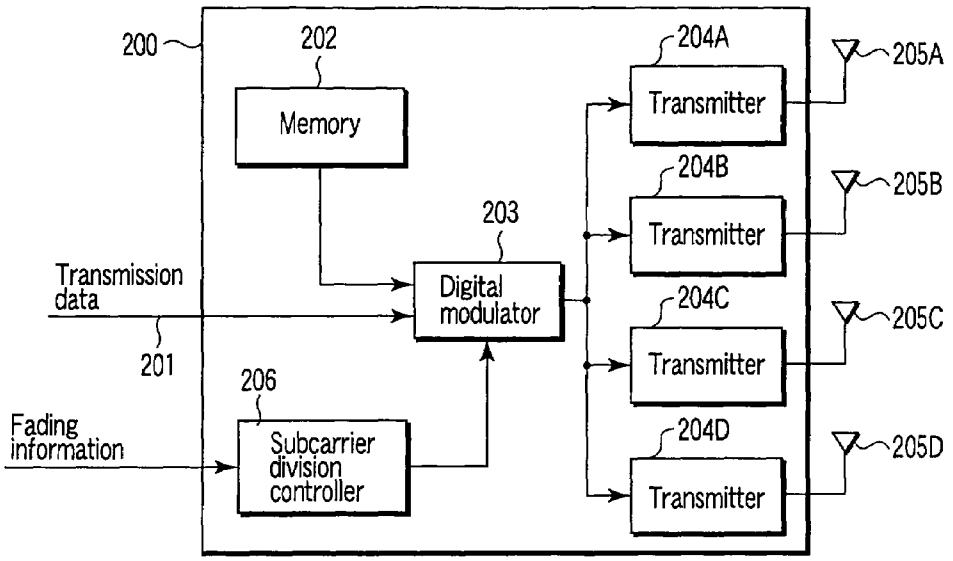

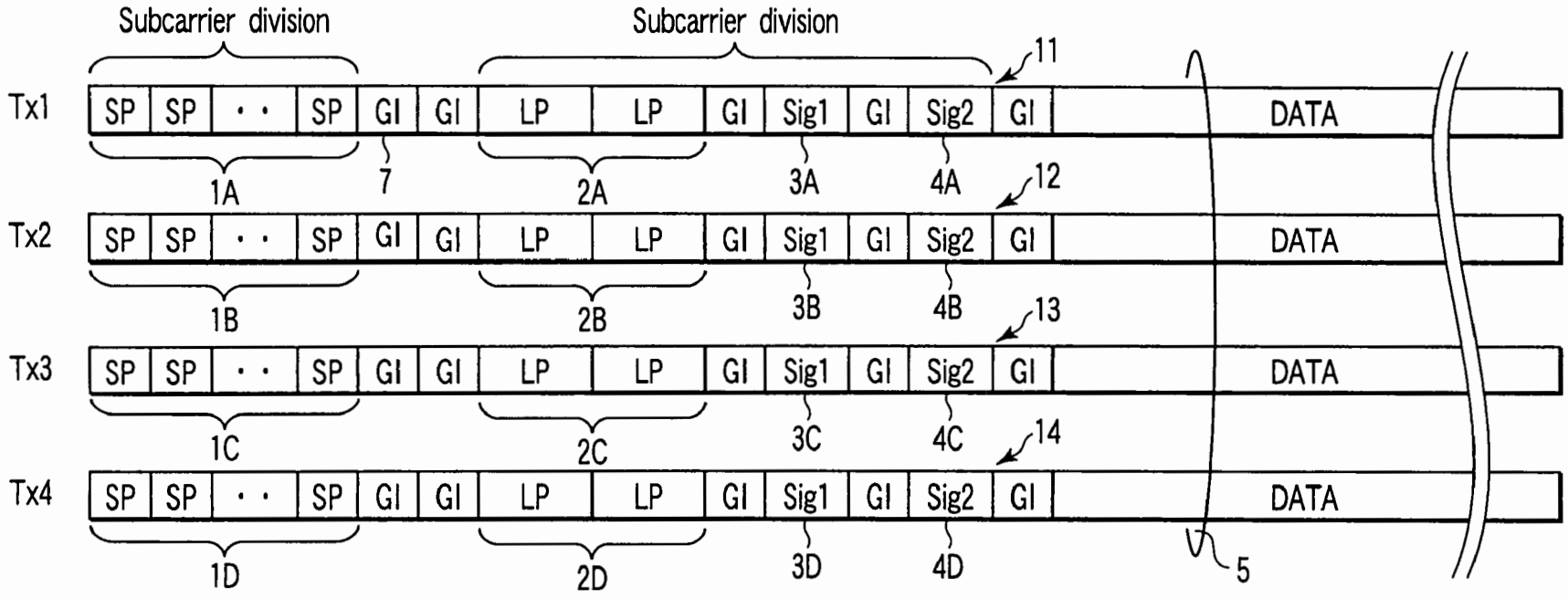
Subcarrier division
Subcarrier division
Tx1
Tx2
Tx3
Tx4
SP
GI
LP
Sig1
Sig2
DATA
1A
1B
1C
1D
2A
2B
2C
2D
3A
3B
3C
3D
4A
4B
4C
4D
7
5
11
12
13
14

FIG. 1

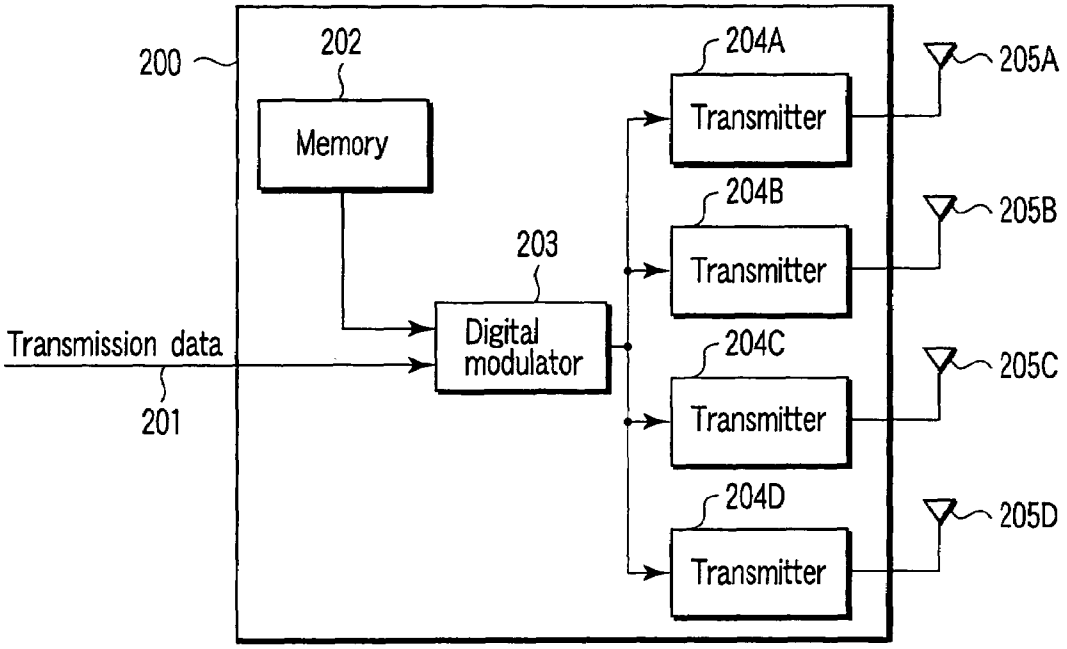
200
202
Memory
203
Digital modulator
Transmission data
201
204A
Transmitter
204B
Transmitter
204C
Transmitter
204D
Transmitter
205A
205B
205C
205D

FIG. 2

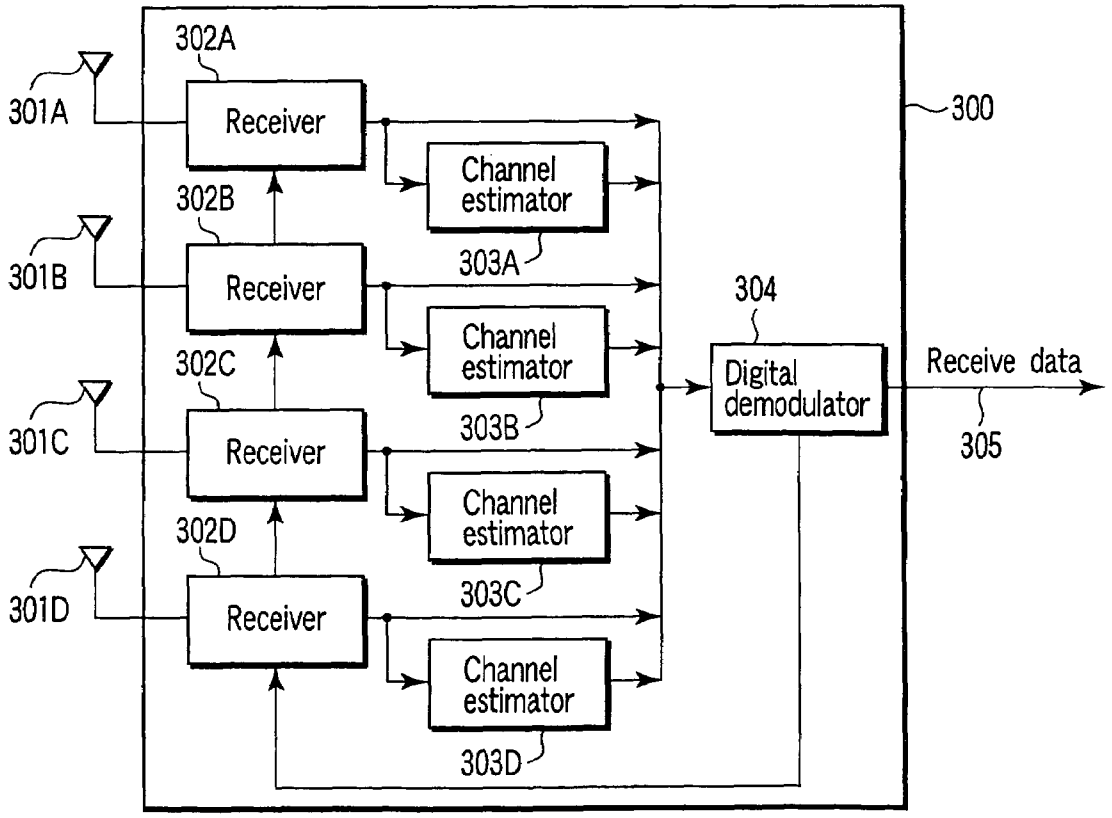
300
301A
301B
301C
301D
302A
302B
302C
302D
Receiver
Receiver
Receiver
Receiver
Channel estimator
Channel estimator
Channel estimator
Channel estimator
303A
303B
303C
303D
304
Digital demodulator
Receive data
305

FIG. 3

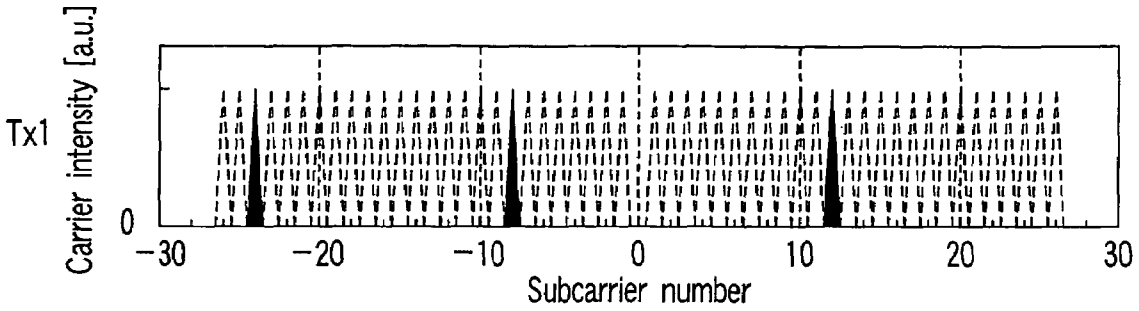

FIG. 4A

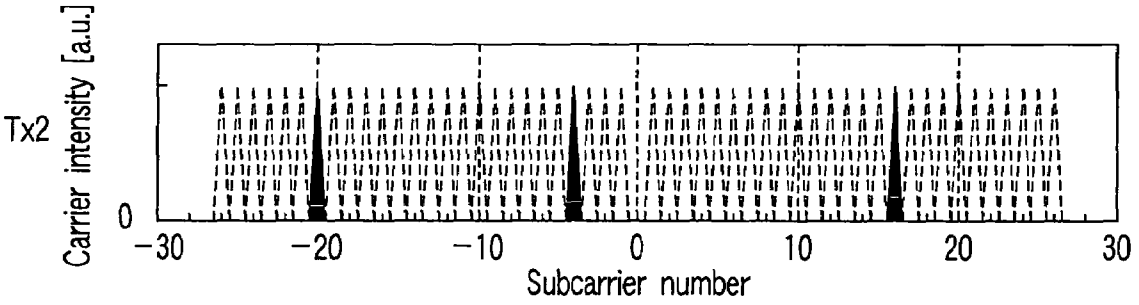

FIG. 4B

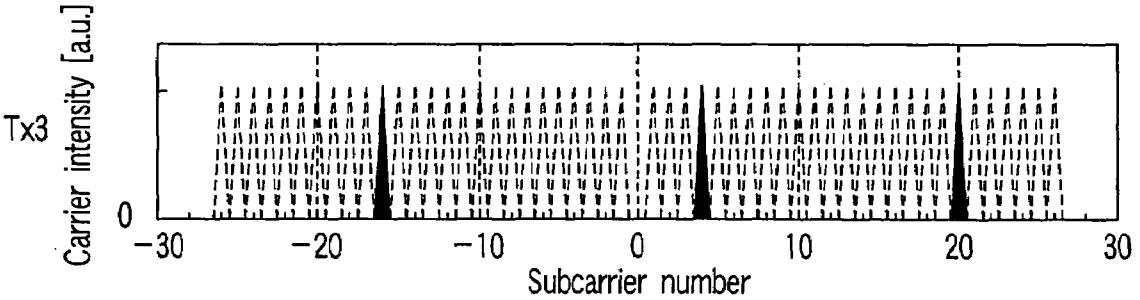

FIG. 4C

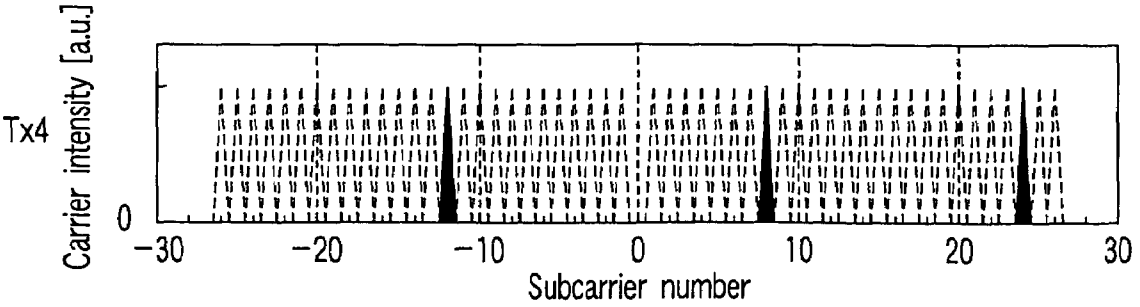

FIG. 4D

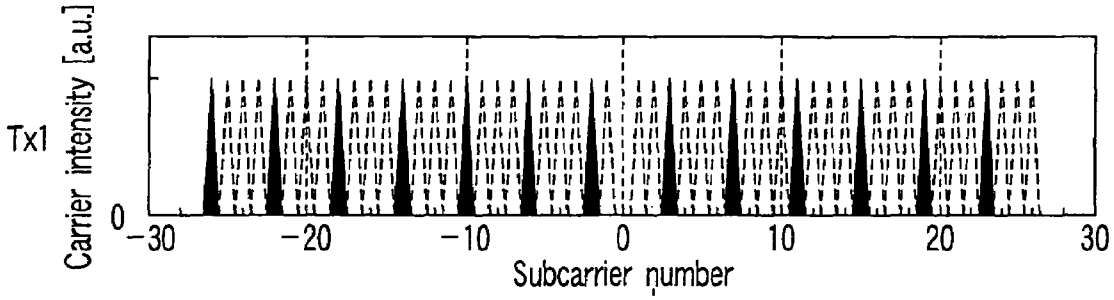

FIG. 5A

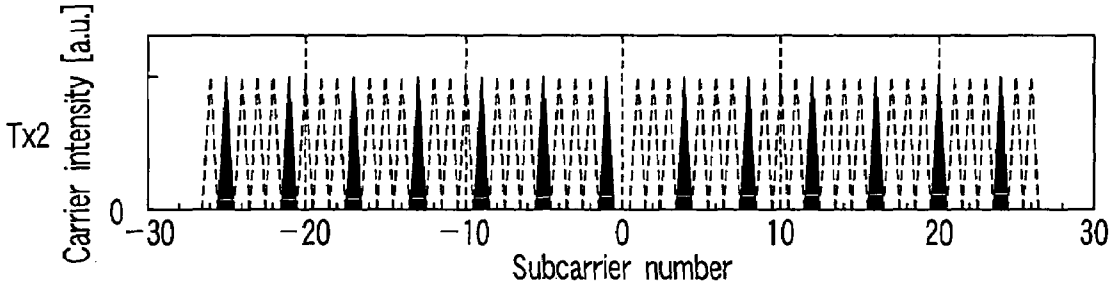

FIG. 5B

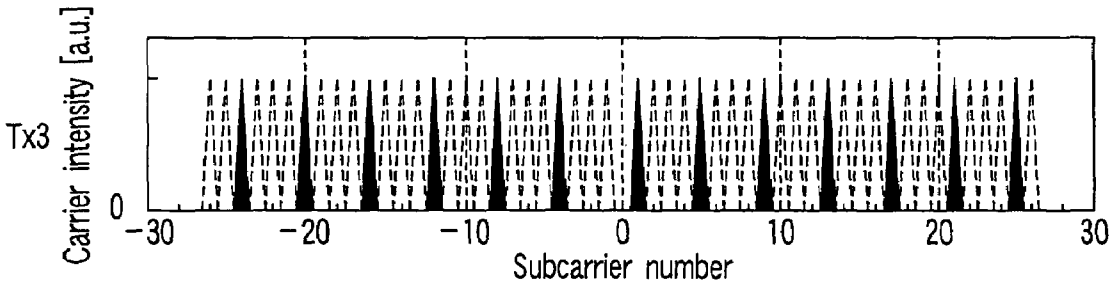

FIG. 5C

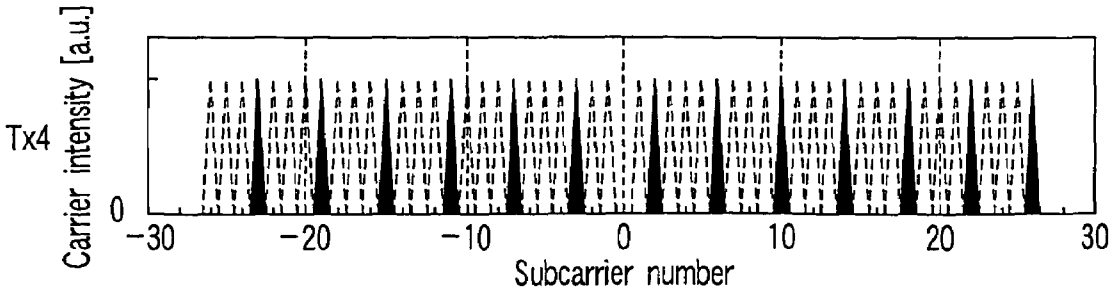

FIG. 5D

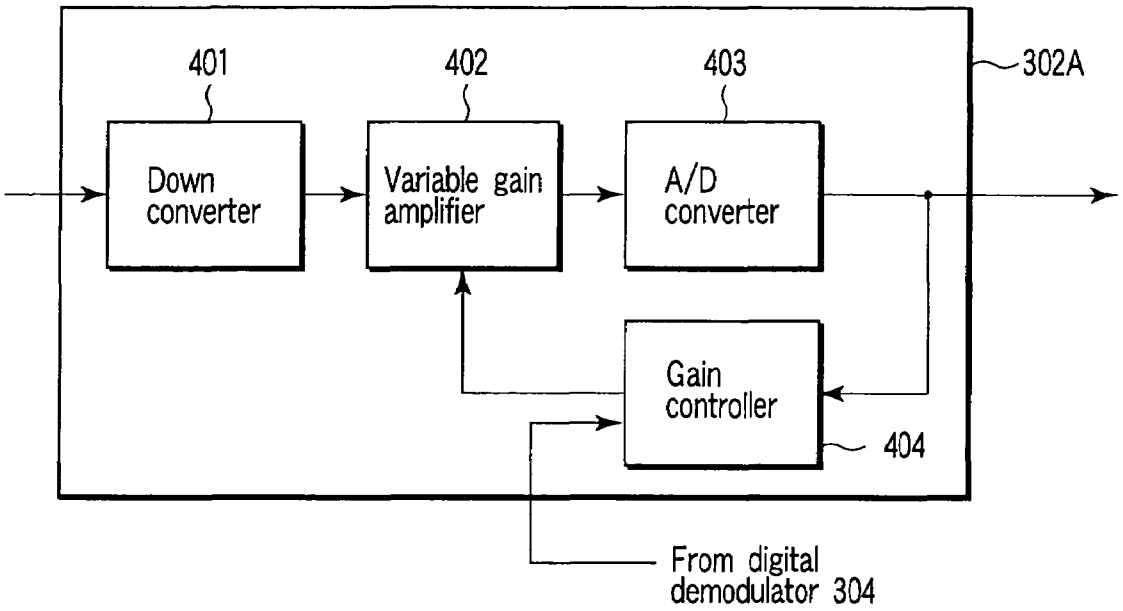
401
402
403
302A
Down converter
Variable gain amplifier
A/D converter
Gain controller
404
From digital demodulator 304

FIG. 6

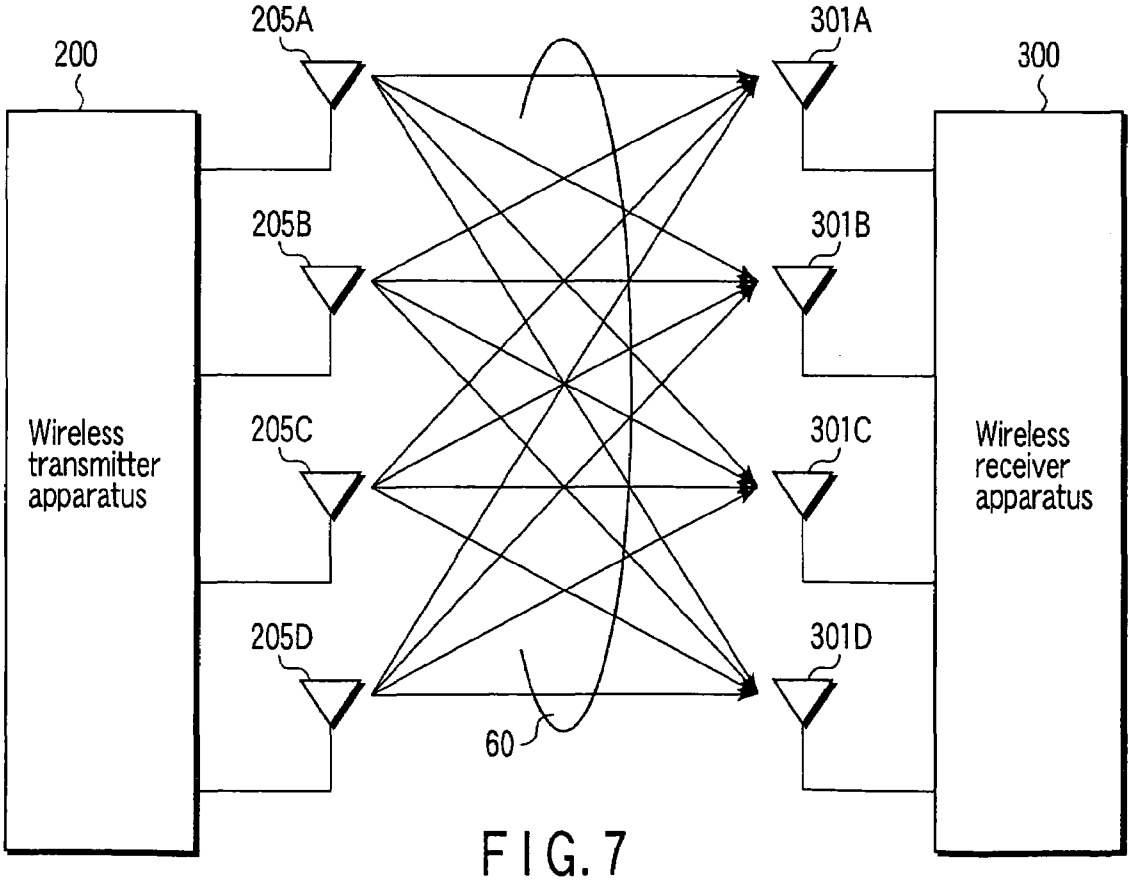
200
205A
205B
205C
205D
301A
301B
301C
301D
300
Wireless transmitter apparatus
Wireless receiver apparatus
60

FIG. 7

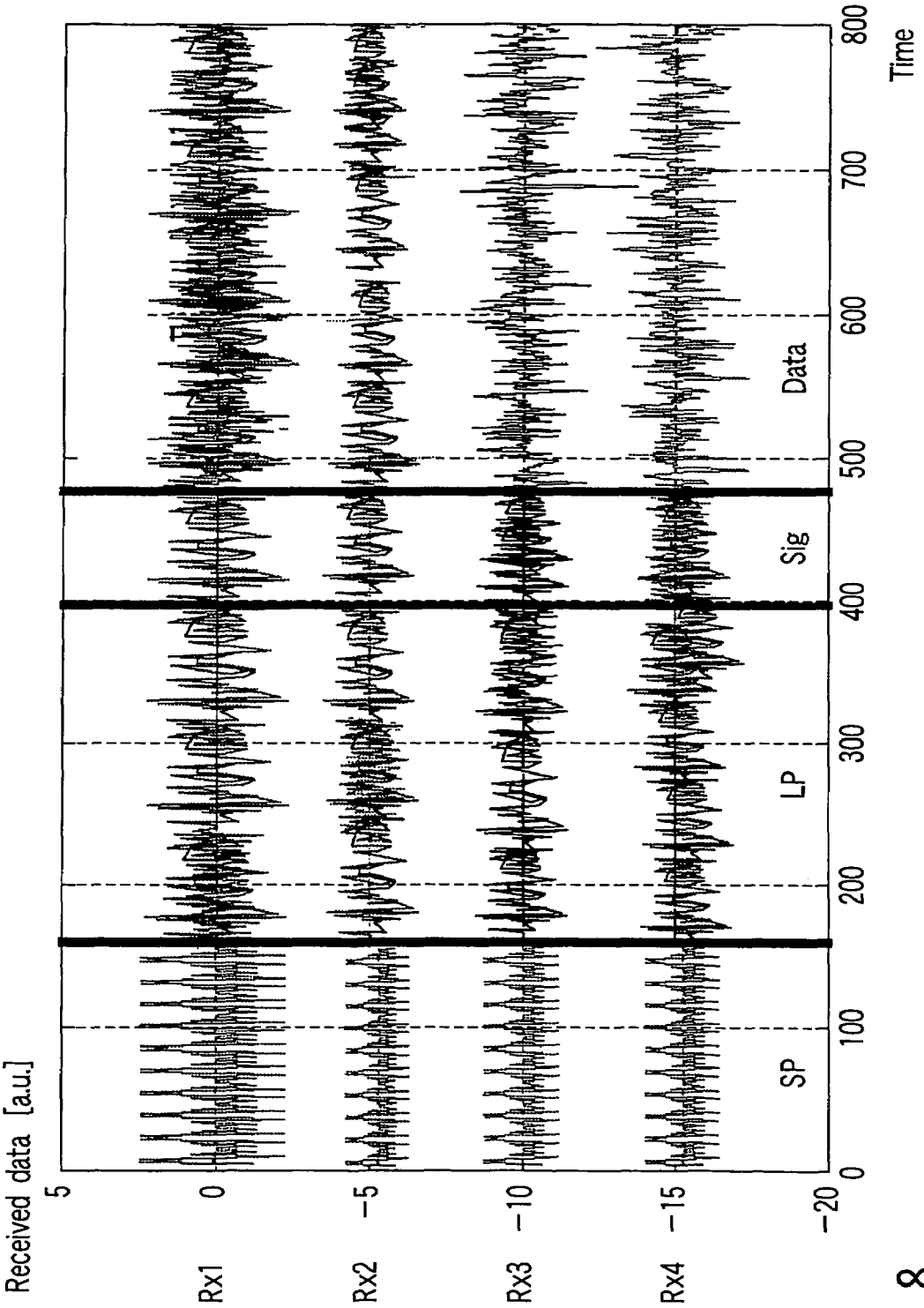
Received data [a.u.]
5
0
−5
−10
−15
−20
Rx1
Rx2
Rx3
Rx4
0
100
200
300
400
500
600
700
800
Time
SP
LP
Sig
Data

FIG. 8

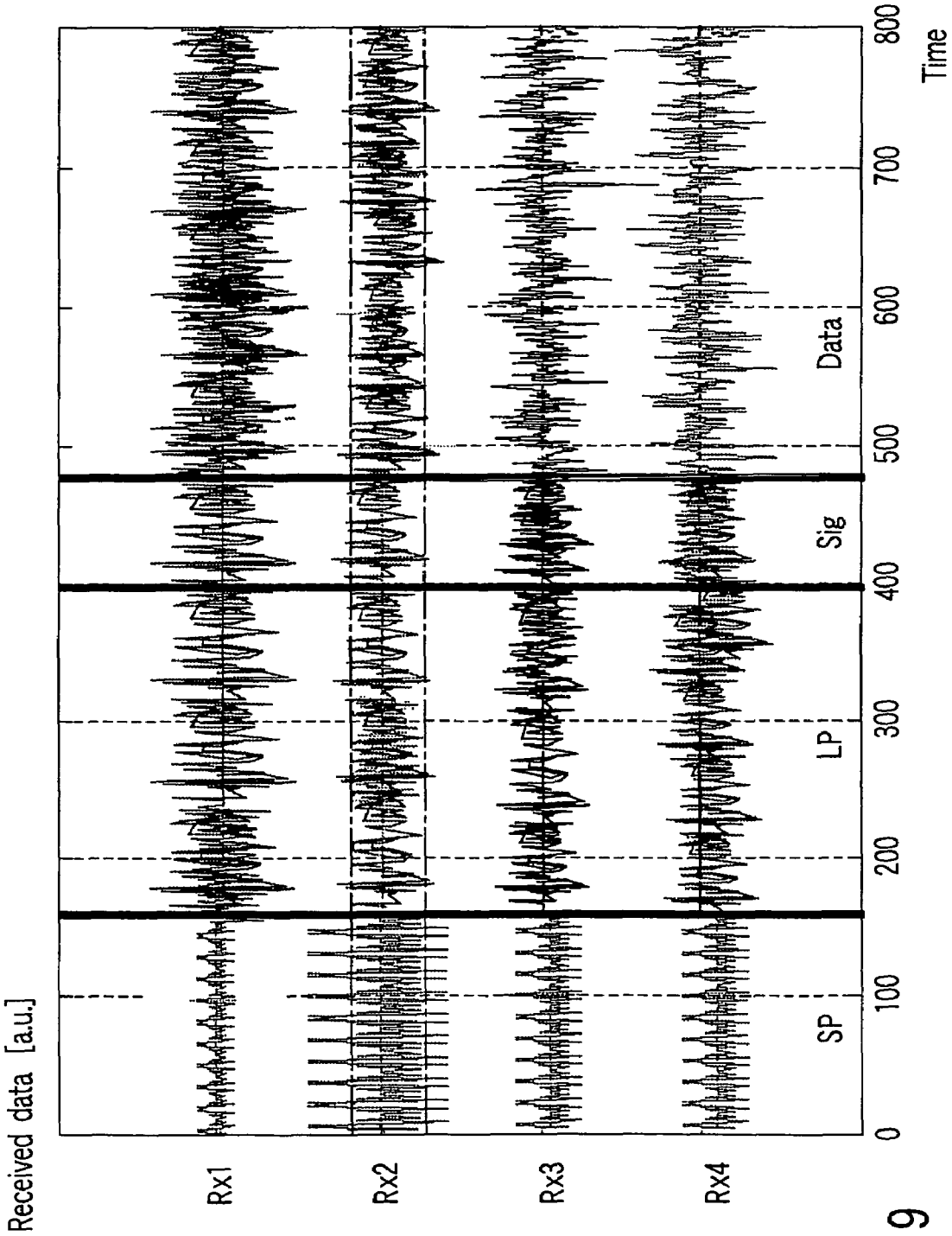
Received data [a.u.]
Rx1
Rx2
Rx3
Rx4
SP
LP
Sig
Data
0
100
200
300
400
500
600
700
800
Time

FIG. 9

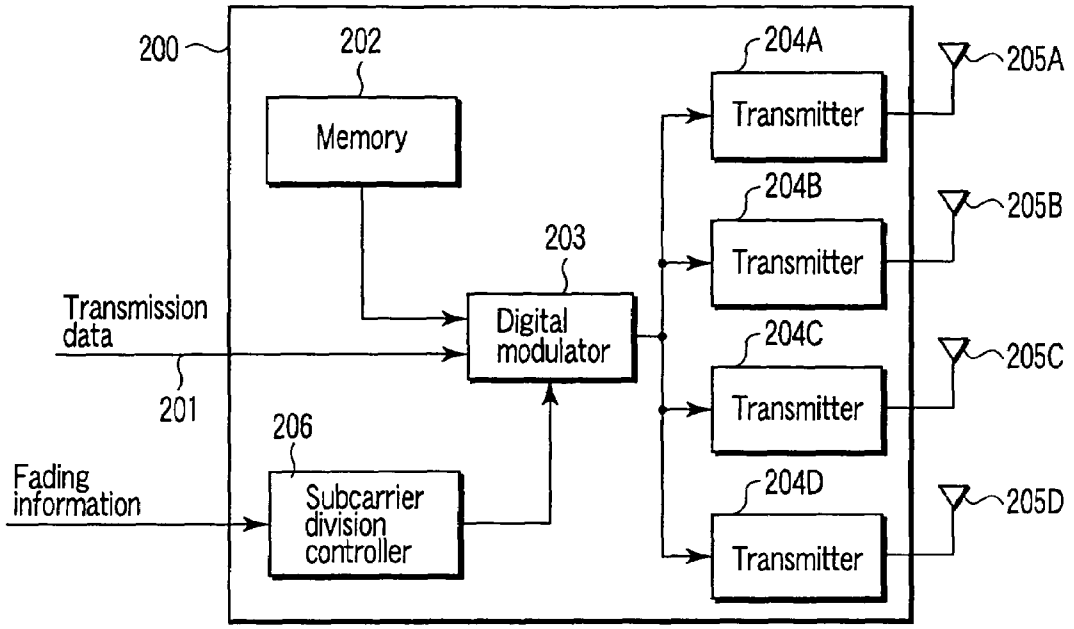

FIG. 10

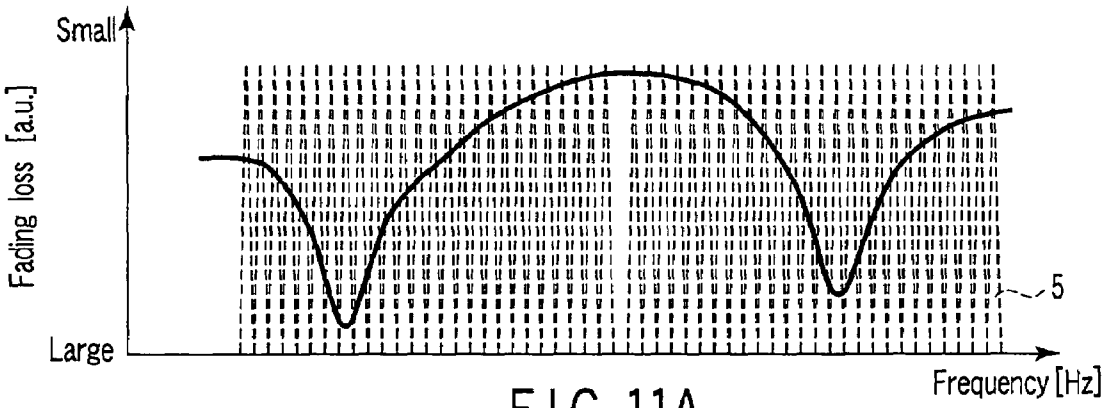

FIG. 11A

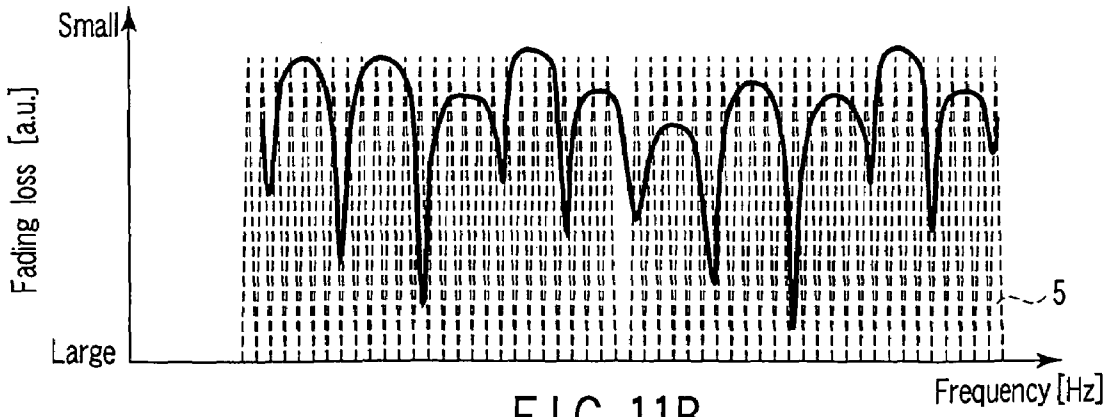

FIG. 11B

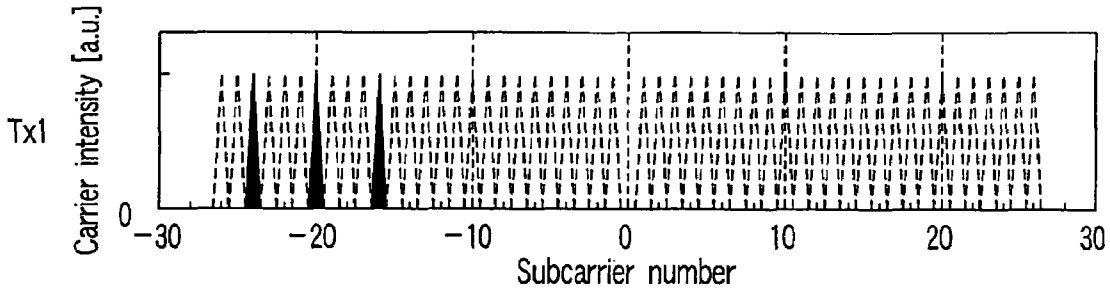

FIG. 12A

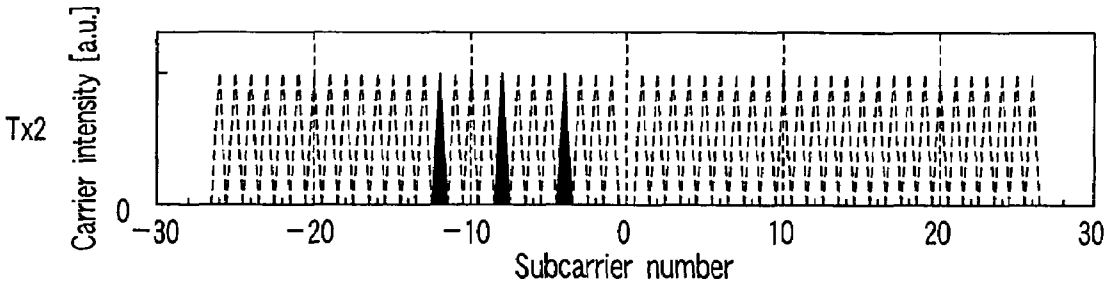

FIG. 12B

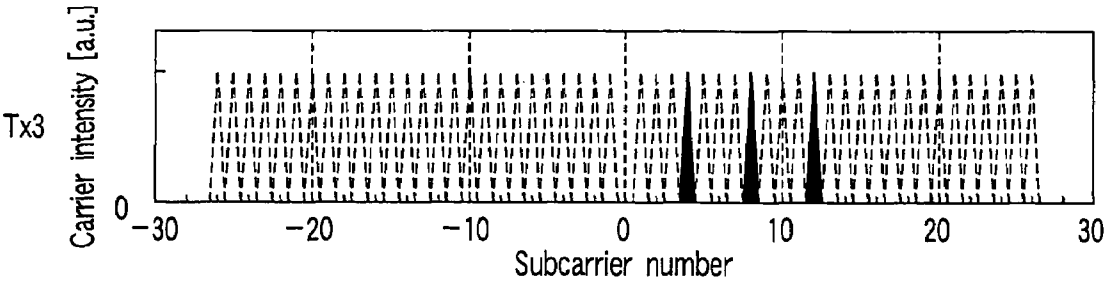

FIG. 12C

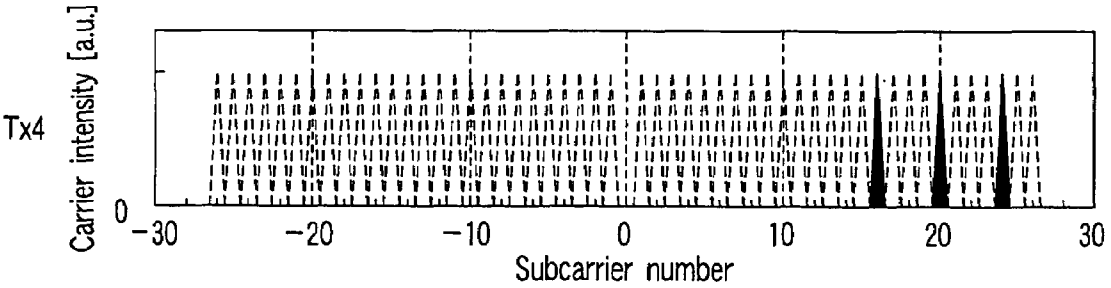

FIG. 12D

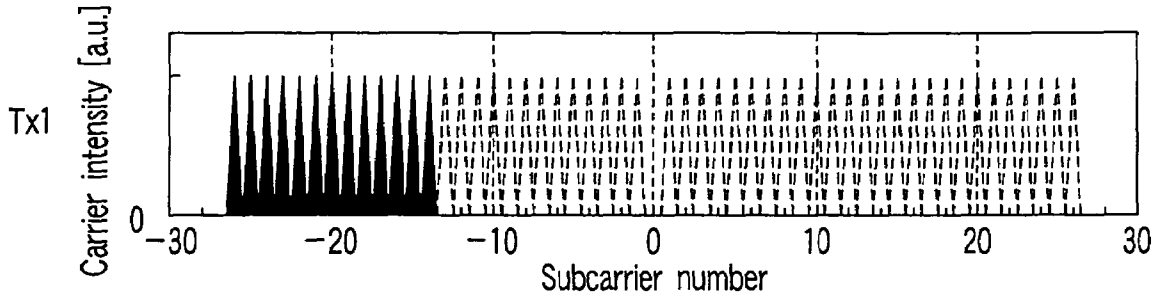

FIG. 13A

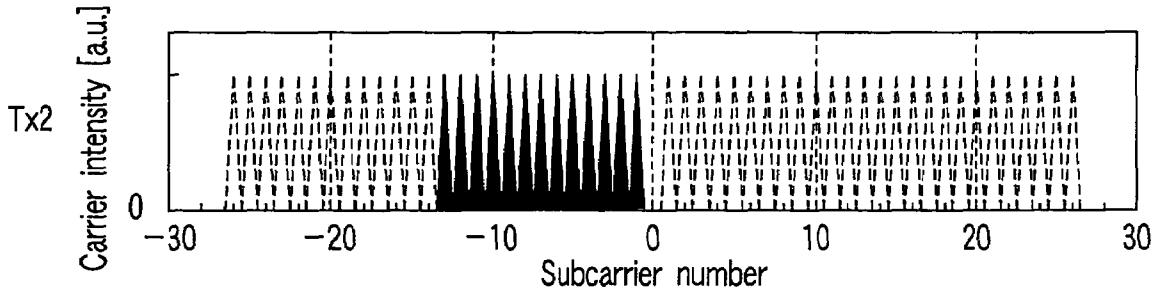

FIG. 13B

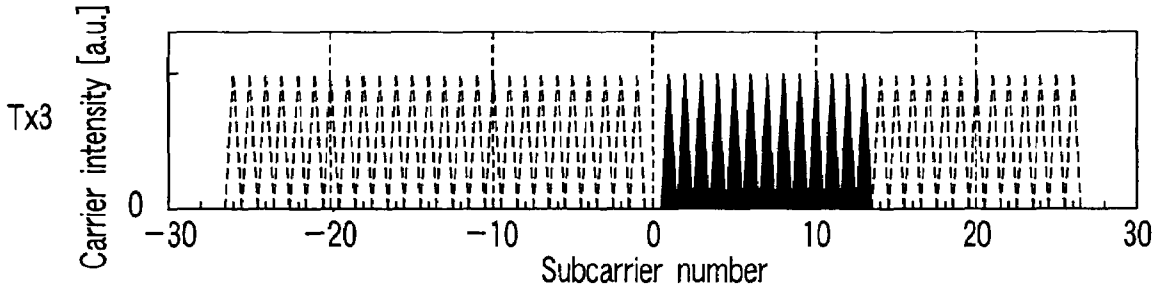

FIG. 13C

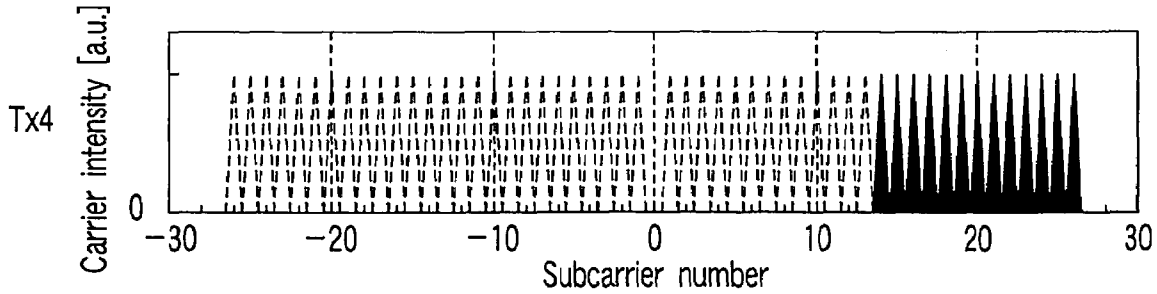

FIG. 13D

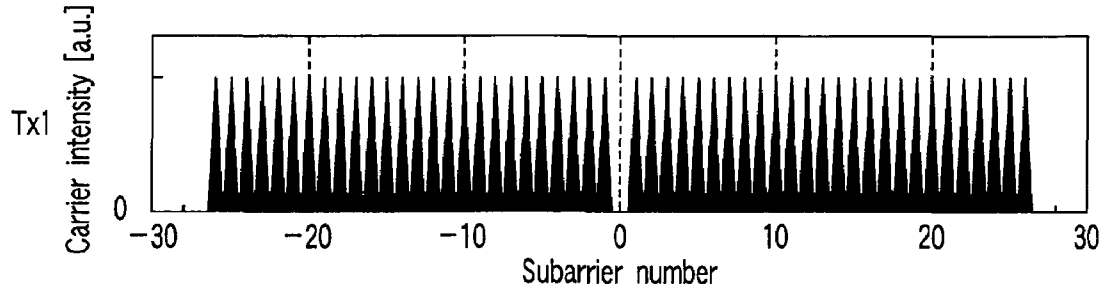

FIG. 14A

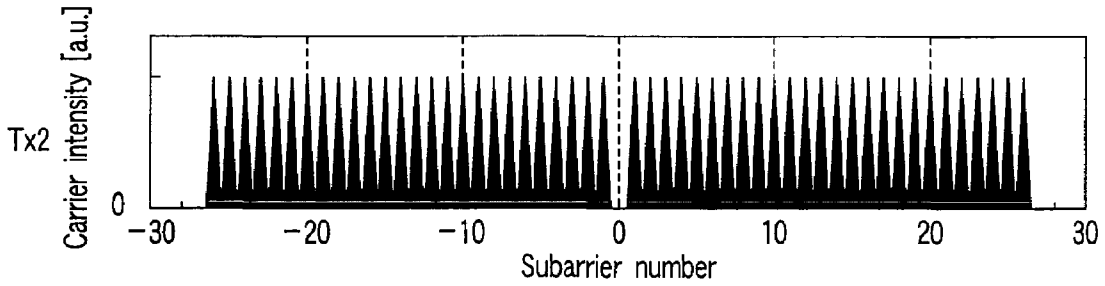

FIG. 14B

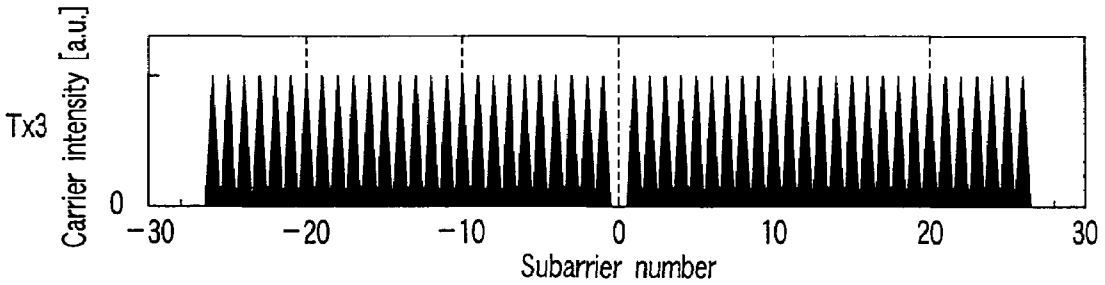

FIG. 14C

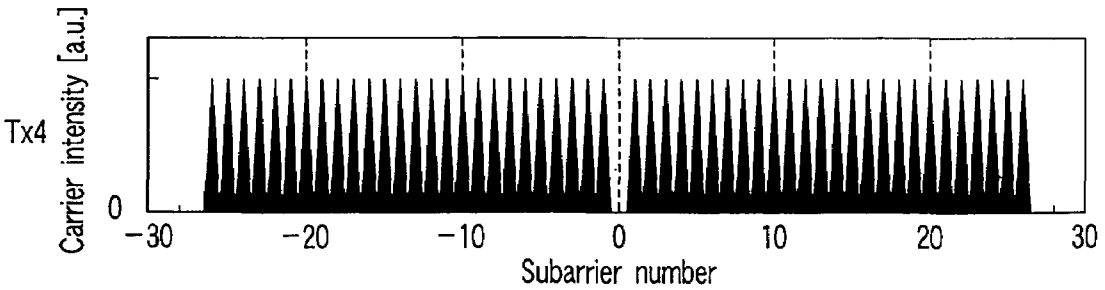

FIG. 14D

MIMO TRANSMISSION AND RECEPTION METHODS AND DEVICES

CROSS-REFERENCE TO RELATED APPLICATIONS

This application is based upon and claims the benefit of priority from prior Japanese Patent Application No. 2004-004848, filed Jan. 9, 2004, the entire contents of which are incorporated herein by reference.

BACKGROUND OF THE INVENTION

1. Field of the Invention

The present invention relates particularly to a wireless transmitting device, wireless receiving device, wireless transmitting method and wireless receiving method by which preamble are transmitted before data.

2. Description of the Related Art

The institute of Electrical and Electronics Engineers (IEEE) is establishing a wireless LAN standard called IEEE 802.11n which aims at a throughput of 100 Mbps or more. In IEEE 802.11n, a technique called multi-input multi-output (MIMO) which uses a plurality of antennas at transmitters and receivers, may be adopted. IEEE 802.11n is required to coexist with the existing IEEE 802.11a. In the MIMO technique, to measure responses (called channel impulse responses) of channel impulse response from a plurality of transmit antennas to each receiving antenna, a preamble as a known sequence must be transmitted from these transmit antennas.

In a preamble proposed by Jan Boer et al. in "Backwards compatibility", IEEE 802.11-03/714r0 (Jan Boer, "Backwards compatibility", IEEE 802.11-03/714r0, Section 2, Slide 14 to 19, (URL:ftp://ieee:wireless@ftp. 802wireless-world.com/)), Paragraph 2 "Diagonally loaded preamble", a short preamble sequence for performing timing synchronization and automatic gain control (AGC) is transmitted from a single transmit antenna. After that, a long preamble sequence for estimating channel impulse response is transmitted from a plurality of transmit antennas. The receiving side performs automatic frequency control (AFC) by using the short preamble sequence and long preamble sequence, and estimates channel impulse response between the antennas. In this manner, the MIMO technique is used in transmission of data signals and the like after that. That is, after the long preamble sequence, a signal field indicating the arrangement of a data signal, e.g., the modulation coding scheme and length of a wireless packet is transmitted, and then the data signal is transmitted.

Jan Boer et al. describe only that the short preamble sequence is transmitted from one antenna and the long preamble sequence is divided into subcarriers and transmitted from a plurality of antennas, and do not describe any signal field transmission method. The preamble proposed by Jan Boer at al. is the same, in a portion from the short preamble sequence to the signal field, as the preamble of IEEE 802.11a standard based on transmission from a single antenna. Therefore, a wireless receiver based on IEEE 802.11a standard which has received the proposed preamble can recognize that the received packet is a wireless packet based on IEEE 802.11a. Accordingly, the proposed preamble allows IEEE 802.11n and IEEE 802.11a standards to coexist on a single wireless station.

The short preamble sequence is transmitted as an orthogonal frequency division multiplexing (OFDM) signal from a single antenna. The long preamble sequence is transmitted, from a plurality of antennas, as different subcarriers divided from one OFDM signal. Likewise, the signal field is transmitted, from the plurality of antennas, as subcarriers divided from one OFDM signal. Since the long preamble sequence is transmitted by dividing one OFDM signal into subcarriers as described above, the receiving side can simultaneously estimate channel impulse response.

In the OFDM receiver apparatus, a received signal is generally demodulated by digital signal processing, so an analog to digital converter is prepared to convert an analog received signal into a digital signal. This analog to digital converter has an allowable level range (called an input dynamic range) permitted to an analog signal to be converted. Therefore, AGC by which the level of a received signal falls within the input dynamic range of the analog to digital converter is essential.

In the preamble by Jan Boer et al., channel estimation is performed by using the long preamble. Since this channel estimation is done by digital signal processing, AGC must be performed by using the short preamble sequence which is a signal before the long preamble sequence. That is, the received level of the short preamble sequence is measured by a receiver connected to each receiving antenna, and the input level of the analog to digital converter is adjusted on the basis of this received level.

Unfortunately, other transmit antennas than the transmit antenna which transmits the short preamble sequence transmit nothing before the long preamble sequence. To receive the long preamble sequence, therefore, AGC must be performed by using the short preamble transmitted from the single transmit antenna. Accordingly, when the receiving side receives the long preamble sequence transmitted from the other transmission antennas or receives a data signal, the received level becomes much higher or lower than the level adjusted by AGC using the short preamble sequence transmitted from the single transmit antenna. If the received level is higher than the upper limit of the input dynamic range of the analog to digital converter, the analog to digital converter saturates. If the received level is lower than the lower limit of the input dynamic range, the analog to digital converter produces a large quantization error. In either case, the analog to digital converter cannot appropriately convert a signal, and this adversely affects processing after the conversion.

Also, since a data signal is transmitted from the plurality of transmit antennas, the changing range of the received level in the interval of the data signal further increases. Accordingly, the problems of the saturation and quantization error of the analog to digital converter described above become significant, and the receiving performance greatly deteriorates.

Generally, a wireless apparatus desirably holds the output level of a transmission signal constant. Assume that the number of transmit antennas is N, and the transmission output is α [watts]. In a wireless communication system obtained by combining the MIMO technique and OFDM, i.e., in a so-called MIMO-OFDM system, the transmission output of a single antenna must be α [watts] for the short preamble sequence because the signal is transmitted from a single antenna. In contrast, for the long preamble sequence, signal field, and data signal, the transmission output of each antenna is α/N [watts] because these signals are transmitted from all antennas.

Accordingly, in a path which transmits the short preamble sequence by using a single antenna, N-fold transmission output is required only to transmit the short preamble. That is, a transmission path for the short preamble produces the redundancy that the specifications of an up converter and power amplifier are required to be able to control the transmission

output α [watts] only when the short preamble sequence is transmitted. On the transmission side as described above, a plurality of transmitters corresponding to a plurality of transmit antennas cannot be given equal structures, and this complicates the whole transmitter apparatus. In addition, since the power consumption of the transmitter apparatus strongly depends on the transmission output level, this is not advantageous in achieving low power consumption.

BRIEF SUMMARY OF THE INVENTION

The first aspect of the present invention provides a wireless transmitting method of performing transmission by an orthogonal frequency division multiplexing (OFDM) using a plurality of subcarriers orthogonal to each other, the method comprising: transmitting, by using a plurality of transmit antennas, a plurality of preambles formed of a plurality of different subcarrier groups selected from a plurality of subcarriers; and transmitting a data by using the plurality of transmit antennas after the preambles are transmitted.

The second aspect of the present invention provides a wireless receiving method for an orthogonal frequency division multiplexing (OFDM) using a plurality of subcarriers orthogonal to each other, the method comprising: receiving, via a plurality of receiving antennas, a plurality of preambles containing a plurality of short preamble sequences formed of a plurality of different subcarrier groups selected from a plurality of subcarriers, and data following the preambles; amplifying the received preambles by a variable gain amplifier having a gain; and controlling the gain in response to reception of the short preamble sequences.

The third aspect of the present invention provides a wireless transmitting method with a plurality of antennas, comprising: transmitting a plurality of preamble signals with the plurality of antennas, the preamble signals being formed of a plurality of different subcarrier groups selected from a plurality of subcarriers orthogonal to each other, using an orthogonal frequency division multiplexing (OFDM) system; and transmitting a data signal with the plurality of antennas, after transmitting the preamble signals.

The fourth aspect of the present invention provides a wireless receiver apparatus comprising: a plurality of antennas; a receiver, associated with the plurality of antennas, which receives a plurality of preamble signals containing a plurality of short preamble strings formed of a plurality of different subcarrier groups selected from the plurality of subcarriers being orthogonal to each other, and a data signal following the preamble signal, using an orthogonal frequency division multiplexing (OFDM) system; a variable gain amplifier which amplifies signals received by the receiver; and a gain controller which controls a gain of the variable gain amplifier depending upon the short preamble strings of the preamble signals.

BRIEF DESCRIPTION OF THE SEVERAL VIEWS OF THE DRAWING

FIG. **1** is a view showing a wireless packet format including a preamble according to an embodiment of the present invention;

FIG. **2** is a block diagram showing a wireless transmitting device according to the embodiment of the present invention;

FIG. **3** is a block diagram showing a wireless receiving device according to the embodiment of the present invention;

FIGS. **4**A to **4**D are views showing the subcarrier arrangements of short preambles shown in FIG. **1**;

FIGS. **5**A to **5**D are views showing the subcarrier arrangements of long preambles and signal fields shown in FIG. **1**;

FIG. **6** is a block diagram showing a receiver shown in FIG. **3**;

FIG. **7** is a view showing channel impulse response of an MIMO-OFDM system according to the embodiment of the present invention;

FIG. **8** is a view showing the received levels of receiving antennas for PLCP signals and data signals according to the embodiment of the present invention;

FIG. **9** is a view showing the received levels of the receiving antennas for PLCP signals and data signals based on IEEE 802.11a;

FIG. **10** is a block diagram showing a wireless transmitting device according to another embodiment of the present invention;

FIGS. **11**A and **11**B are graphs showing two typical fading characteristics used to explain the other embodiment of the present invention;

FIGS. **12**A to **12**D are views showing the subcarrier arrangements of short preambles according to the other embodiment of the present invention;

FIGS. **13**A to **13**D are views showing the subcarrier arrangements of long preambles and signal fields according to the other embodiment of the present invention; and

FIGS. **14**A to **14**D are views showing the subcarrier arrangements of data signals.

DETAILED DESCRIPTION OF THE INVENTION

Embodiments of the present invention will be described in detail below with reference to the accompanying drawing.

A preamble according to an embodiment of the present invention contains first to fourth physical layer convergence protocol (PLCP) signals **11** to **14** transmitted from transmit antennas Tx**1** to Tx**4**. The PLCP signals **11** to **14** includes short preamble sequences **1**A to **1**D, long preamble sequences **2**A to **2**D, first signal fields (Sig**1**) **3**A to **3**D, and second signal fields (Sig**2**) **4**A to **4**D. The transmit antenna Tx**1** transmits the short preamble sequence **1**A, long preamble sequence **2**A, first signal field **3**A, and second signal field **4**A of the first PLCP signal **11** in order. Likewise, the antenna Tx**2** transmits **1**B, **2**B, **3**B, and **4**B of the second PLCP signal **12** in order, the antenna Tx**3** transmits **1**C, **2**C, **3**C, and **4**C of the third PLCP signal **13** in order, and the antenna Tx**4** transmits **1**D, **2**D, **3**D, and **4**D of the fourth PLCP signal **14** in order.

Unit preambles SP contained in the short preamble sequences **1**A to **1**D and unit preambles LP contained in the long preamble sequences **2**A to **2**D are signal sequences having predetermined lengths. The length of LP is relatively larger than that of SP. After transmitting the PLCP signals **11** to **14**, i.e., the second long preamble sequences **4**A to **4**D, the antennas Tx**1** to Tx**4** transmit data signals (DATA) **5**.

The short preamble sequences **1**A to **1**D, long preamble sequences **2**A to **2**D, and first signal fields **3**A to **3**D are based on IEEE 802.11a standard. The second fields **4**A to **4**D are not based on IEEE 802.11a standard, but contain information such as the modulation coding scheme and data length of wireless packet for communication by MIMO technique. The second signal fields **4**A to **4**D are desirably based upon IEEE 802.11n currently being in standardization process.

Guard intervals GI are arranged between the short preamble sequences **1**A to **1**D and the long preamble sequences **2**A to **2**D, between the long preamble sequences **2**A to **2**D and the first signal fields **3**A to **3**D, between the first signal fields **3**A to **3**D and the second signal fields **4**A to **4**D, and between the second signal fields **4**A to **4**D and the data signals **5**. In the

preamble based on IEEE 802.11a, GI**7** having a double length is placed before each of the long preamble sequences **2**A to **2**D.

The short preamble sequences **1**A to **1**D are mainly used in timing synchronization, AGC, and coarse adjustment of AFC for frequency synchronization. The long preamble sequences **2**A to **2**D are mainly used in fine adjustment of AFC, and signal processing for channel estimation. The first signal fields **3**A to **3**D are based on IEEE 802.11a, and transmitted as OFDM symbols. In the first signal fields **3**A to **3**D, the modulation coding scheme of the data signals **5** following the PLCP signals **11** to **14**, the length of a wireless packet, and the like are described. Therefore, a wireless receiving device based on IEEE 802.11a can perform a normal receiving operation. During the interval of the data signals **5** following the PLCP signals **11** to **14**, no other wireless transmitting device based on IEEE 802.11a starts transmission and destroys wireless packets.

The PLCP signals **11** to **14** can meet IEEE 802.11a standard during the interval from the short preamble sequences **1**A to **1**D to the first signal fields **3**A to **3**D. This makes it possible to construct an MIMO-OFDM system capable of matching both IEEE 802.11a and another wireless LAN standard (e.g., IEEE 802.11n).

In this embodiment, the second signal fields **4**A to **4**D describing the modulation coding scheme for communication by using MIMO and the length of a wireless packet are inserted in the endmost portions of the PLCP signals **11** to **14**. The receiving side demodulates the second signal fields **4**A to **4**D, and recognizes, e.g., the modulation coding scheme of signals transmitted from the antennas Tx**1** to Tx**4**, the wireless packet length, and the MIMO operation. Therefore, the receiving side can recognize that the data signals **5** following the PLCP signals **11** to **14** are wireless packets based on a wireless LAN standard (e.g., IEEE 802.11n) other than IEEE 802.11a, and perform a receiving operation as the MIMO-OFDM system.

FIGS. **2** and **3** show a wireless transmitting device **200** and wireless receiving device **300** according to this embodiment which implements the MIMO-OFDM system. The wireless transmitting device **200** shown in FIG. **2** includes transmit antennas **205**A to **205**D, wireless transmitters **204**A to **204**D, a digital modulator **203**, and a memory **202**. The wireless receiving device **300** shown in FIG. **3** includes receiving antennas **301**A to **301**D, wireless receivers **302**A to **302**D, channel estimators **303**A to **303**D for performing channel impulse response estimation (channel estimation) on the basis of information from the wireless receivers **302**A to **302**D, and a digital demodulator **304**.

The transmit antennas **205**A, **205**B, **205**C, and **205**D shown in FIG. **2** correspond to Tx**1**, Tx**2**, Tx**3**, and Tx**4**, respectively, shown in FIG. **1**. In this embodiment, the numbers of the transmit antennas and receiving antennas are four. However, the number of the transmit antennas is not limited to four and can be any plural number. The number of the receiving antennas may also be one or any plural number other than four. The numbers of the transmit antennas and receiving antennas need not be equal.

A practical operation of the wireless transmitting device **200** shown in FIG. **2** will be explained below. First, the digital modulator **203** modulates transmission data **201** and an output preamble from the memory **202** to assemble a wireless packet. The output preamble from the memory **202** corresponds to the first to fourth PLCP signals **11** to **14** shown in FIG. **1**.

The assembled wireless packet undergoes processing necessary for transmission performed by the transmitters **204**A to **204**D, e.g., digital to analog conversion, frequency conversion (up conversion) to the radio frequency (RF) band, and power amplification. After that, the wireless packet is supplied to the transmit antennas **205**A to **205**D corresponding to the antennas Tx**1** to Tx**4** shown in FIG. **1**. As a consequence, the RF signal is transmitted from the transmit antennas **205**A to **205**D to the wireless receiving device shown in FIG. **3**. In the following explanation, the transmit antennas **205**A to **205**D are Tx**1** to Tx**4** shown in FIG. **1**.

The transmitted RF signal is based on an OFDM signal, and contains a plurality of subcarriers of the OFDM signal. The first to fourth PLCP signals **11** to **14** shown in FIG. **1** are simultaneously transmitted from the transmit antennas **205**A to **205**D as subcarriers allocated to the transmit antennas **205**A to **205**D while frequency orthogonal conditions are maintained.

Generally, in the OFDM signal based on IEEE 802.11a, the short preamble sequences **1**A to **1**D contain 12 subcarriers, and the long preamble sequences **2**A to **2**D, the first signal fields **3**A to **3**D, second signal fields **4**A to **4**D, and data signals **5** contain 52 subcarriers.

As shown in FIGS. **4**A to **5**D, the first to fourth PLCP signals **11** to **14** are transmitted as different subcarrier groups from the transmit antennas **205**A to **205**D (corresponding to Tx**1** to Tx**5** in FIG. **1**). FIGS. **4**A to **4**D illustrate the arrangements of 12 subcarriers in the short preamble sequences **1**A to **1**D shown in FIG. **1**. FIGS. **5**A to **5**D illustrate the arrangements of 52 subcarriers in the long preamble sequences **2**A to **2**D and first signal fields **3**A to **3**D in FIG. **1**. Referring to FIGS. **4**A to **5**D, the abscissa indicates the positions where the subcarriers are arranged, and the ordinate indicates the subcarrier numbers. The dotted lines indicate subcarrier positions where subcarriers can be arranged, and the solid portions represent that subcarriers are actually arranged.

The subcarrier numbers are 0 in the center of the signal band of the OFDM signal, negative numbers on the lower sideband side, and positive numbers on the upper sideband side. No subcarrier is placed in a position where the subcarrier number is "0", and 52 subcarriers are arranged in the positions of subcarrier numbers ±1 to ±26. For example, as shown in FIGS. **4**A to **4**D, 12 subcarriers of the short preamble sequences **1**A to **1**D are arranged in the positions of subcarrier numbers ±24, ±20, ±16, ±12, ±8, and ±4 on the basis of IEEE 802.11a.

As a subcarrier dividing method, i.e., as a method of allocating a plurality of subcarriers of the OFDM signal to the first to fourth PLCP signals **11** to **14**, the embodiment of the present invention uses a method, as shown in FIGS. **4**A to **5**D, by which subcarriers are sequentially selected and allocated one by one to the PLCP signals **11** to **14** in order of subcarrier arrangement (order of subcarrier number).

For example, the allocation of subcarriers to the short preamble sequences **1**A to **1**D of the first to fourth PLCP signals **11** to **14** is as shown in FIG. **4**A to **4**D. That is, subcarriers having subcarrier numbers −24, −8, and +12 are allocated to the short preamble **1**A. Subcarriers having subcarrier numbers −20, −4, and +16 are allocated to the short preamble sequence **1**B. Subcarriers having subcarrier numbers −16, +4, and +20 are allocated to the short preamble sequence **1**C. Subcarriers having subcarrier numbers −12, +8, and +24 are allocated to the short preamble sequence **1**D. In this manner, the phases of subcarriers allocated to the short preambles **1**A to **1**D are shifted by four waves.

The allocation of subcarriers to the long preamble sequences **2**A to **2**D of the first to fourth PLCP signals **11** to **14** is basically the same as the allocation of subcarriers to the short preamble sequences **1**A to **1**D described above, except

that the phases of those subcarriers allocated to the long preambles **2**A to **2**D are shifted by one wave as shown in FIGS. **5**A to **5**D.

The PLCP signals **11** to **14** containing the subcarrier groups divided as shown in FIGS. **4**A to **5**D are transmitted from the transmit antennas **205**A to **205**D. The data signals **5** following the PLCP signals **11** to **14** are transmitted by MIMO channels. That is, the transmitters **204**A to **204**D generate different OFDM signals corresponding to the individual data signals **5**. These OFDM signals are transmitted as four RF signals, corresponding to the number of the transmitters **204**A to **204**D, from the transmit antennas **205**A to **205**D.

In the wireless transmitting device according to this embodiment as described above, the four PLCP signals **11** to **14** are transmitted, from the transmit antennas **205**A to **205**D by the transmitters **204**A to **204**D, as four subcarrier groups obtained by dividing a plurality of subcarriers of one OFDM signal. On the other hand, the four data signals **5** are transmitted as different OFDM signals generated by the transmitters **204**A to **204**D from the transmit antennas **205**A to **205**D.

When subcarriers are uniformly divided in accordance with the transmit antennas **205**A to **205**D, the PLCP signals **11** to **14** are transmitted at equal levels (transmission powers) from the transmit antennas **205**A to **205**D. Even when subcarriers are not uniformly divided, the PLCP signals **11** to **14** are transmitted at substantially equal levels. For example, when the number of the transmit antennas **205**A to **205**D is four as in this embodiment, the transmit antennas **205**A to **205**D transmit three subcarriers for each of the short preamble sequences **1**A to **1**D, and transmit 13 subcarriers for each of the long preamble sequences **2**A to **2**D and signal fields **3**A to **3**D and **4**A to **4**D. When the number of the transmit antennas is three, each transmit antenna transmits four subcarriers for each of the short preamble sequences **1**A to **1**C, and 17 or 18 subcarriers for each of the long preamble sequences **2**A to **2**C and signal fields **3**A to **3**C and **4**A to **4**C.

Since the data signals **5** are not divided into subcarriers unlike the PLCP signals **11** to **14**, the data signals **5** have a subcarrier arrangement different from the PLCP signals **11** to **14**. However, a total of 52 subcarriers are transmitted as the data signals **5** from the transmit antennas **205**A to **205**D, so the transmission level of the data signals **5** is equivalent to that of the PLCP signals **11** to **14**. As described above, the transmission levels of the transmit antennas **205**A to **205**D are equal between the PLCP signals **11** to **14** and the data signals **5**, and substantially equal between the transmit antennas **205**A to **205**D. Therefore, the transmitters **204**A to **204**D can have identical structures having the same output level. Furthermore, the output level of each of the transmitters **204**A to **204**D can be decreased in proportion to the number of antennas, against the total output level of the transmitter apparatus **200**. This makes it possible to reduce the current consumption by suppressing the output power of the power amplifiers used in the transmitters **204**A to **204**D, and alleviate the distortion characteristics. That is, it is possible to simplify the transmitter apparatus **200**, and thereby realize low power consumption.

The operation of the wireless receiving device **300** shown in FIG. **3** will be explained below. The RF signals transmitted from the wireless receiving device **200** shown in FIG. **2** are received by the receiving antennas **301**A to **301**D. The wireless receiving device **300** may also have a single receiving antenna. The RF received signals from the receiving antennas **301**A to **301**D are input to the receivers **302**A to **302**D. The receivers **302**A to **302**D perform receiving processes, e.g., frequency conversion (down conversion) from the RF band to the baseband (BB), AGC, and analog to digital conversion, thereby generating baseband signals.

These baseband signals from the receivers **302**A to **302**D are input to the channel estimators **303**A to **303**D and digital demodulator **304**. The channel estimators **303**A to **303**D estimate channel impulse responses from the wireless transmitting device **200** shown in FIG. **2** to the wireless receiving device **300** shown in FIG. **3**. The channel demodulator **304** demodulates the baseband signals in accordance with the channel impulse responses estimated by the channel estimators **303**A to **303**D, and generates received data **305** corresponding to the transmission data **201** shown in FIG. **2**.

More specifically, the digital demodulator **304** has a channel equalizer on the input stage. This channel equalizer performs equalization for removing distortion of the received signals from the channels in accordance with the estimated channel impulse responses. The digital demodulator **304** demodulates the equalized signals at an adequate demodulation timing based on the timing synchronization process described above, and reproduces the data.

The receivers **302**A to **302**D shown in FIG. **3** will be described below. FIG. **6** shows details of the receiver **302**A. Since the receivers **302**B to **302**D are the same as the receiver **302**A, only the receiver **302**A will be explained. A down converter **401** down-converts the RF received signal input from the receiving antenna **301**, and generates a baseband signal. The down converter **401** can convert the RF received signal into the baseband either directly or after converting the signal into an intermediate frequency (IF) band.

The baseband signal generated by the down converter **401** is input to a variable gain amplifier **402**, and AGC, i.e., signal level adjustment is performed. The output signal from the variable gain amplifier **402** is converted into a digital signal by an analog to digital converter **403**. The digital signal from the analog to digital converter **403** is output outside the receiver **302**, and also input to a gain controller **404**. The gain controller calculates the gain in accordance with the digital signal from the analog to digital converter **403**, and controls the gain of the variable gain amplifier **402** on the basis of the calculation. Details of AGC will be described later.

The operation performed by the wireless receiving device **300** to receive a transmission signal containing the PLCP signals **11** to **14** shown in FIG. **1** will be described below. First, the wireless receiving device **300** receives the short preamble sequences **1**A to **1**D transmitted from the transmit antennas **205**A to **205**D shown in FIG. **2**, and coarsely adjusts frame start detection, timing synchronization, AGC, and AFC by using baseband signals corresponding to the short preamble sequences **1**A to **1**D. In response to the reception of the short preamble sequences **1**A to **1**D, the digital demodulator **304** sends a command signal to the receivers **302**A to **302**D to perform AGC.

In the following description, the gain controller **404** measures the received level from the analog to digital-converted received signal and calculates the gain. However, it is also possible to measure the received level by analog detection of an RF-band or IF-band received signal, and calculate the gain. The variable gain amplifier **402** amplifies the baseband signals corresponding to the short preamble sequences **1**A to **1**D in accordance with a predetermined initial gain. The output signal from the variable gain amplifier **402** is input to the gain controller **404** via the analog to digital converter **403**. The gain controller **404** calculates the gain from the level after analog to digital conversion of the received signals corresponding to the short preamble sequences **1**A to **1**D, and controls the gain of the variable gain amplifier **402** in accordance with the calculated gain.

Letting X be the level before analog to digital conversion of the baseband signals corresponding to the short preamble sequences **1**A to **1**D. If the level X is high, the baseband signals exceed the upper limit of the input dynamic range of the analog to digital converter **403**, so a digital signal obtained by analog to digital conversion saturates. This particularly distorts high-level signals. If the level X is low, large quantization errors caused by analog to digital conversion are contained particularly in low-level signals. That is, regardless of whether the level X is high or low, the analog to digital converter **403** does not perform any adequate conversion, and this largely degrades the reception quality.

To solve this problem, the gain controller **404** controls the gain of the variable gain amplifier **402** such that a level Y after analog to digital conversion of the baseband signals corresponding to the short preamble sequences **1**A to **1**D is a predetermined target value Z. If the level of the baseband signals is very high to such an extent that all input signals to the analog to digital converter **403** saturate, or if the level is very low, it is sometimes impossible to appropriately control the gain of the variable gain amplifier **402** by one-time control. In this case, gain control is repeated. Consequently, the level of the baseband signals input to the analog to digital converter **403** can be adjusted to an adequate level falling within the input dynamic range of the analog to digital converter **403**. By thus controlling the gain of the variable gain amplifier **402** by using the baseband signals corresponding to the short preamble sequences **1**A to **1**D, appropriate analog to digital conversion can be performed, so deterioration of the reception quality can be avoided.

AGC can be either individually performed for the receivers **302**A to **302**D, or collectively performed for the receivers **302**A to **302**D by using, as a target value, a received level obtained by measuring one specific receiver or the highest received level. Although the former method will be explained in this embodiment, the latter method may also be used. Accordingly, the same AGC is individually performed for the receivers **302**A to **302**D, and the gain of the variable gain amplifier **402** is adjusted for each of the receiving antennas **301**A to **301**D.

As described previously, the short preamble sequences **1**A to **1**D are transmitted from the transmit antennas **205**A to **205**D after being divided into subcarriers, and received by the receiving antennas **301**A to **301**D. As shown in FIG. **7**, therefore, the fading statuses of all channel impulse response **60** between the transmit antennas **205**A to **205**D and the receiving antennas **301**A to **301**D are accurately transmitted to the receiver apparatus **300**. In this embodiment, the four transmit antennas **205**A to **205**D and four receiving antennas **301**A to **302**D are used, so the number of the channel **60** is **16** as shown in FIG. **7**.

The statuses of the channel **60** when the short preamble sequences **1**A to **1**D are transmitted are equal to those of the channel **60** when the long preamble sequences **2**A to **2**D, first signal fields **3**A to **3**D, second signal fields **4**A to **4**D, and data signals **5** are transmitted. Therefore, unlike in the case proposed by Jan Boer et al. in which short preamble sequences are transmitted from a single antenna, the receiver apparatus **300** can accurately recognize the fading statuses of the channel **60** when the short preamble sequences **1**A to **1**D, long preamble sequences **2**A to **2**D, first signal fields **3**A to **3**D, second signal fields **4**A to **4**D, and data signals **5** are transmitted. Accordingly, AGC can be accurately performed for each of the receivers **302**A to **302**D.

This effect will be explained below with reference to FIGS. **8** and **9**. Referring to FIGS. **8** and **9**, the abscissa indicates the reception time of the preambles and data signals, and the ordinate indicates the received levels of the receiving antennas Rx**1** to Rx**4** with respect to the preambles and data signals. FIG. **8** shows this embodiment, and FIG. **9** shows the case proposed by Jan Boer et al. In FIG. **8**, reference symbol SP represents the received levels of the short preamble sequences **1**A to **1**D; LP, the received levels of the long preamble sequences **2**A to **2**D; Sig, the received levels of the first signal fields **3**A to **3**D and second signal fields **4**A to **4**D; and Data, the received levels of the data signals **5**. FIG. **9** shows examples of the received levels of short preamble sequences SP, long preamble sequences LP, signal fields Sig, and data signals Data assumed in practice when the preambles by Jan Boer et al. are transmitted in the MIMO-OFDM system.

The received levels of Rx**1** and Rx**2** corresponding to the receiving antennas **301**A and **301**B will be described in detail below. To clearly distinguish between the received levels of LP, Sig, and Data received by Rx**1** and Rx**2**, alternate long and short dashed lines and alternate long and two short dashed lines are added to FIGS. **8** and **9**. As shown in FIG. **8**, at the receiving antennas **301**A to **301**D, the received levels of the short preamble sequences **1**A to **1**D match the received levels of the long preamble sequences **2**A to **2**D, first signal fields **3**A to **3**D, second signal fields **4**A to **4**D, and data signals **5**. For example, the received level of SP and the received levels of LP, Sig, and Data at Rx**1** and Rx**2** shown in FIG. **8** are uniform as indicated by the alternate long and short dashed lines and alternate long and two short dashed lines. On the other hand, as shown in FIG. **9** indicating the case by Jan Boer et al., at some receiving antennas the received level of the short preamble sequences SP is different from the received levels of the long preamble sequences LP, signal fields Sig, and data signals Data. For example, at the antenna Rx**1**, the received level of SP is lower than the alternate long and short dashed lines and alternate long and two short dashed lines indicating the received levels of LP, Sig, and Data. At the antenna Rx**2**, the received level of SP is higher than the received levels of LP, Sig,. and Data. The reasons are as follows.

A general MIMO-OFDM system has an MIMO transmitter, a plurality of transmit antennas, a plurality of receiving antennas, and an MIMO receiver. In this MIMO-OFDM system, when the transmit antennas and receiving antennas are spatially separated from each other, channel from given transmit antennas to given receiving antennas are independent of each other. Therefore, the correlations between these channel are low. For this reason, even when transmission signals of equal powers are transmitted from these transmit antennas, the levels of these signals received by the receiving antennas are naturally different.

According to the proposition by Jan Boer et al. in which short preamble sequences are transmitted only from the transmit antenna Tx**1**, of the 16 channel impulse response between the four transmit antennas Tx**1** to Tx**4** and the four receiving antennas Rx**1** to Rx**4** shown in FIG. **7**, the short preamble sequences propagate on only four channel from Tx**1** to Rx**1**, Rx**2**, Rx**3**, and Rx**4**, and do not propagate on the 12 remaining channel from Tx**2**, Tx**3**, and Tx**4** to Rx**2**, Rx**3**, and Rx**4**. That is, since the channel are different, a phenomenon occurs at high probability in which received levels when the receiver receives the long preamble sequences LP, signal fields Sig, and data signals Data transmitted from the transmit antennas Tx**2** to Tx**4** are much higher or lower than the received level assumed by using the short preamble sequences SP transmitted from the transmit antenna Tx**1**.

On the other hand, when the short preamble sequences **1**A to **1**D, long preamble sequences **2**A to **2**D, first signal fields **3**A to **3**D, and second signal fields **4**A to **4**D are transmitted

from the antennas **205**A to **205**D in accordance with the embodiment of the present invention, the short preamble sequences **1**A to **1**D propagate on the same 16 channel, shown in FIG. **7**, as the long preamble sequences **2**A to **2**D, first signal fields **3**A to **3**D, second signal fields **4**A to **4**D, and data signals **5**. Consequently, at the receiving antennas Rx**1** to Rx**4**, the received levels of the short preamble sequences **1**A to **1**D match the received levels of the long preamble sequences **2**A to **2**D, first signal fields **3**A to **3**D, second signal fields **4**A to **4**D, and data signals **5**.

For example, compare the received level of the short preamble sequences SP and the received levels of the long preamble sequences LP, signal fields Sig, and data signals Data at the receiving antenna Rx**2** shown in FIGS. **8** and **9**. In this case, in AGC using the short preamble sequences **1**A to **1**D based on this embodiment, the received level of the short preamble sequences is equal to the received levels of the long preamble sequences, signal fields, and data signals as shown in FIG. **8**. This realizes fine AGC. That is, since the accuracy of AGC performed using the short preamble sequences increases, it is possible to avoid saturation or the increase in quantization error when the received signals are converted into digital signals by the analog to digital converter **403**. Consequently, wireless communication can be performed at a high transmission rate by suppressing communication errors of data signals.

When AGC control can be performed at high accuracy by using the short preamble sequences, the following effects are also obtained. That is, since received signals input to the analog to digital converter **403** in each of the receivers **302**A to **302**D are adjusted to adequate levels, channel estimation using the long preamble sequences can be rapidly performed. In addition, since channel estimation can be performed by using accurate digital signals, the estimation accuracy of the channel impulse response can be increased.

In this embodiment as described above, the transmitters **204**A to **204**D can be designed by the same level diagram in the transmission states of all the short preamble sequences, long preamble sequences, first and second signal fields, and data signals. This simplifies the wireless transmitting device **200**. Also, the output level of the transmitters **204**A to **204**D is1/(the number of antennas) of the total output level of the transmitter apparatus **200**. This makes downsizing of the power amplifier in the final stage and lower power consumption feasible.

Since the channel impulse response of the short preamble sequences are the same as the channel impulse response of the long preamble sequences, first and second signal fields, and data signals, AGC using the short preamble sequences can maintain high accuracy capable of tracking level variations with respect to transmission from a plurality of transmit antennas. Accordingly, the reception quality can be increased by suppressing the influence of saturation or quantization errors in the analog to digital converter.

Furthermore, since the reception accuracy increases, the number of bits of the analog to digital converter for converting received signals into digital signals can be reduced. This makes low power consumption of the receiver apparatus possible.

Another embodiment of the present invention will be described below. In the other embodiment of the present invention, as shown in FIG. **10**, a wireless transmitting device **200** additionally has a subcarrier division controller **206** connected to a digital modulator **203**. A memory **202**, transmitters **204**, and transmit antennas **205** are the same as in FIG. **2**, so an explanation thereof will be omitted.

The frequency fading statuses of the channel impulse response **60** shown in FIG. **7** of the MIMO-OFDM system can be detected by the known method. The subcarrier division controller **206** shown in FIG. **10** receives channel fading detection information indicating that fading is short-delay fading having a relatively short delay time or long-delay fading having a relatively long delay time. To detect the channel fading, the frequency response, included in the transmitting device **200**, of a received signal of a receiving device **300** can be used as a reference. It is also possible to cause the transmitting device **200** to notify the receiving device **300** of frequency response information of RF signals actually transmitted from transmit antennas **205**A to **205**D to receiving antennas **301**A to **301**D, and use this frequency response information as a reference. The propagation fading detection method may also be some other method, and is not particularly limited.

The subcarrier division controller **206** controls the digital modulator **203** in accordance with the channel fading detection information, thereby controlling the subcarrier dividing method, i.e., the allocation of subcarriers of short preamble sequences **1**A to **1**D, long preamble sequences **2**A to **2**D, first signal fields **3**A to **3**D, and second signal fields **4**A to **4**D to transmitters **204**A to **204**D.

FIGS. **11**A and **11**B illustrate the frequency fading. FIG. **11**A shows typical frequency fading in a short-delay fading environment, and FIG. **11**B shows typical frequency fading in a long-delay fading environment. The frequency fading is roughly divided into these two patterns. The period of a valley in which the frequency fading loss is large is typically about a few MHz indoors. The bandwidth of an OFDM signal to be used in IEEE 802.11a or in IEEE 802.11n whose standard will be established in the future is about 20 MHz. Therefore, a plurality of fading valleys shown in FIGS. **11**A and **11**B are present within this OFDM signal band.

The characteristics of the two frequency fading patterns described above will be briefly summarized below. The short-delay fading shown in FIG. **11**A has the characteristics that a specific signal band produces fading valleys and suffers a propagation path loss, but propagation path losses are relatively small in other bands. On the other hand, the long-delay fading shown in FIG. **11**B is characterized in that fading valleys appear in the entire signal band at narrow frequency intervals, i.e., periodic bands suffer large losses. These fading characteristics are determined in a channel between a transmit antenna and a receiving antenna. Therefore, the fading statuses of the 16 channel **60** shown in FIG. **7** are not the same, but have similar tendencies.

In this embodiment, the above-mentioned characteristics of the short-delay fading and long-delay fading are taken into consideration, and the subcarrier division controller **206** switches the subcarrier dividing methods of the digital modulator **203** on the basis of the channel fading status detection information. More specifically, if the channel **60** has the short-delay fading, subcarriers are sequentially selected and allocated one by one, in order of subcarrier arrangement shown in FIGS. **4**A to **5**D, to first to fourth PLCP signals **11** to **14** transmitted from the transmit antennas **205**A to **205**D, in accordance with the subcarrier dividing method explained in the above embodiment. That is, in the first to fourth PLCP signals **11** to **14**, subcarriers are allocated to the short preamble sequences **1**A to **1**D as shown in FIG. **4**, and are allocated to the long preamble sequences **2**A to **2**D as shown in FIG. **5**.

As shown in FIG. **11**A, in the short-delay fading, the influence of a frequency fading valley is small in a remote band. Accordingly, as the subcarrier dividing method as described

above, subcarriers allocated to the first to fourth PLCP signals **11** to **14** are dispersed in terms of frequency to avoid concentration of subcarriers to a band which suffers a large loss. This makes it possible to avoid the influence of a large propagation path loss caused by a frequency fading valley in a specific band.

On the other hand, if the channel **60** has the long-delay fading, as shown in FIGS. **12**A to **13**D, subcarriers selected from a plurality of subcarriers for each of a plurality of partial bands obtained by dividing the OFDM signal band are allocated to the first to fourth PLCP signals **11** to **14** transmitted from the transmit antennas **205**A to **205**D.

For example, to allocate subcarriers to the short preamble sequences **1**A to **1**D of the first to fourth PLCP signals **11** to **14**, the whole band of the OFDM signal is divided by the number of the transmit antennas, and these divided bands are allocated to the individual transmit antennas and transmitted. As shown in FIGS. **12**A to **12**D, the OFDM signal band is divided into four partial bands (first to fourth partial bands), and subcarriers at a period of four waves as subcarrier numbers are selectively allocated to each partial band.

That is, three subcarriers in the first partial band having the lowest frequency are allocated to the short preamble sequence **1**A, and three subcarriers in the second partial band having the second lowest frequency are allocated to the short preamble sequence **1**B. Similarly, three subcarriers in the third partial band having a frequency higher than that of the second partial band are allocated to the short preamble sequence **1**C, and three subcarriers in the fourth partial band having the highest frequency are allocated to the short preamble sequence **1**D.

The allocation of subcarriers to the long preamble sequences **2**A to **2**D of the first to fourth PLCP signals **11** to **14** is basically the same as the allocation of subcarriers to the short preamble sequences **1**A to **1**D described above. However, a larger number of subcarriers in the individual partial bands, e.g., all subcarriers having consecutive subcarrier numbers in the partial bands in the example shown in FIGS. **13**A to **13**D are allocated to the long preamble sequences **2**A to **2**D.

In the long-delay fading as shown in FIG. **11**B, frequency fading valleys periodically appear even in remote bands. However, in a narrow band of a few hundred kHz to a few MHz, e.g., in the adjacent subcarrier or the next adjacent subcarrier, large losses can be avoided on average. As shown in FIGS. **12**A to **13**D, therefore, subcarriers are divided for each of adjacent partial bands, and subcarrier groups close to each other in each partial band are allocated to the first to fourth PLCP signals **11** to **14**. This makes it possible to avoid a large propagation path loss caused when a frequency fading valley and the subcarrier arrangement match.

That is, when a signal is transmitted from a given transmit antenna and received by a given receiving antenna, it is possible to avoid a loss caused by superposition of a subcarrier on a band which periodically appears and has a large loss, and eliminate the influence of a fading loss on a subcarrier in one of adjacent bands. Accordingly, it is possible to smoothly perform frequency synchronization, channel estimation, and MIMO channel configuration information transmission by using the long preamble sequences **2**A to **2**D and first signal fields **3**A to **3**D, without degrading the accuracy of AGC control by the short preamble sequences **1**A to **1**D. It is also possible to suppress the influence of saturation and quantization errors in the analog to digital converter and improve the reception quality while maintaining the accuracy of the AGC function which tracks variations in received level in the receiver apparatus.

As described earlier, in a wireless propagation environment using the MIMO-OFDM system, fading patterns having various characteristics such as short-delay fading and long-delay fading occur. By switching the subcarrier dividing methods in accordance with the fading characteristics as in this embodiment, the influence of fading can by minimized in the receiver apparatus in any wireless propagation environment. This makes it possible to maintain the accuracy of the AGC function with respect to received level variations in a wireless propagation environment, suppress the influence of saturation and quantization errors in the analog to digital converter, and thereby improve the reception quality.

The MIMO-OFDM system desirably minimizes the influence of frequency fading by which a specific band suffers a large loss, when transmitting the short preamble sequences **1**A to **1**D, long preamble sequences **2**A to **2**D, first signal fields **3**A to **3**D, and second signal fields **4**A to **4**D by subcarrier division. This is so because 52 subcarriers as shown in, e.g., FIGS. **14**A to **14**D are arranged in the data signals **5**, and this averages the influence of frequency fading.

By contrast, in a subcarrier arrangement in which bands having undergone subcarrier division as shown in FIGS. **4**A to **4**D or FIGS. **12**A to **13**D are limited to portions of the signal band, the whole transmission signal may significantly deteriorate depending on the characteristics of frequency fading. This is so because AGC adjustment using the short preambles **1** may deviate from the gain adjustment target value which is optimized when the data signals **5** are received.

In this embodiment, however, it is possible to avoid a large loss of divided subcarriers in a channel between a given transmit antenna and a given receiving antenna, regardless of the fading environment of the propagation path. This makes it possible to smoothly perform frequency synchronization, channel estimation, and MIMO channel configuration information transmission by using the long preamble sequences **2**A to **2**D and first signal fields **3**A to **3**D without degrading the accuracy of AGC control by the short preamble sequences **1**A to **1**D.

In the embodiments of the present invention as described above, the output levels of the transmitters can be made uniform independently of transmission information of the short preamble sequences, long preamble sequences, signal fields, and data signals. Since this eliminates the problem that the output power of one antenna increases only when the short preamble sequences are transmitted, the redundancy of the transmitters can be suppressed. Also, since the output powers of the transmitters can be made uniform at a low level, the power consumption can be reduced.

In addition, the short preamble sequences are transmitted from a plurality of antennas and used in AGC. Therefore, the input levels of the analog to digital converter and wireless receiving device can be appropriately adjusted to data simultaneously transmitted from a plurality of antennas in MIMO, and the receiving performance of the wireless receiving device can be improved. Also, since the input level of the analog to digital converter can be set at an adequate value, the number of bits of the analog to digital converter can be reduced.

Furthermore, since the short preamble sequences transmitted from a plurality of antennas are used in AGC, accurate AGC can be performed not only when data is received but also when the long preamble sequences are received. Accordingly, deterioration of the reception accuracy can be avoided. This also prevents the transmission efficiency from being decreased by insertion of an extra preamble sequence.

On the other hand, in a propagation path in which signals are transmitted from a given transmit antenna and received by

a given receiving antenna, subcarriers of the short preamble sequences can be propagated while the influence of fading is minimized. Therefore, AGC which tracks received level variations on the receiving side can be made to correspond to the propagation path loss from each transmit antenna to each receiving antenna, so the reception accuracy can be increased. Furthermore, it is possible to reduce the number of bits of the analog to digital converter inserted to perform digital signal processing on received signals.

Additional advantages and modifications will readily occur to those skilled in the art. Therefore, the invention in its broader aspects is not limited to the specific details and representative embodiments shown and described herein. Accordingly, various modifications may be made without departing from the spirit or scope of the general inventive concept as defined by the appended claims and their equivalents.

What is claimed is:

1. A wireless transmitting method of performing transmission by orthogonal frequency division multiplexing (OFDM) using a plurality of subcarriers orthogonal to each other, the method comprising:

transmitting, by using a plurality of transmit antennas, a plurality of preambles formed of a plurality of different subcarrier groups selected from the plurality of subcarriers; and

transmitting data by using the plurality of transmit antennas after the plurality of preambles are transmitted, wherein

transmitting the plurality of preambles includes, if a fading status of a propagation path to a wireless receiving device is short-delay fading, sequentially allocating, to each of the plurality of subcarrier groups of the plurality of preambles, subcarriers selected one by one from the plurality of subcarriers in order of arrangement, and, if a fading status of a propagation path is long-delay fading, allocating, to each of the plurality of subcarrier groups of the plurality of preambles, subcarriers selected from the plurality of subcarriers for each of a plurality of partial bands obtained by dividing a signal band in which the OFDM system is used.

2. The method according to claim **1**, wherein a preamble of the plurality of preambles contains a short preamble, a long preamble, and at least one signal field.

3. The method according to claim **2**, wherein the at least one signal field contains a first signal field based on IEEE 802.11 a.

4. The method according to claim **2**, wherein the at least one signal field contains a first signal field based on IEEE 802.11 a, and a second signal field placed after the first signal field and based on a standard other than IEEE 802.11 a.

* * * * *