United States Patent [19]

Winkler

[11] **3,909,099**

[45] **Sept. 30, 1975**

[54] **ELECTRICAL CONNECTOR WITH MOVABLY MOUNTED CABLE CLAMP**

[75] Inventor: **Edward D. Winkler,** Reading, Mass.

[73] Assignee: **Anderson Power Products, Inc.,** Boston, Mass.

[22] Filed: **June 14, 1974**

[21] Appl. No.: **479,417**

[52] **U.S. Cl.** ..... **339/47 R;** 339/103 C

[51] **Int. Cl.**[2] **H01R 25/00;** H01R 13/58

[58] **Field of Search** 339/47–49, 339/103, 255

[56] **References Cited**

UNITED STATES PATENTS

2,888,660	5/1959	Fox	339/103.M
3,091,746	5/1963	Winkler	339/47 R
3,836,938	9/1974	Barrett et al.	339/49 R X

Primary Examiner—Joseph H. McGlynn
Assistant Examiner—Craig R. Feinberg
Attorney, Agent, or Firm—Richard J. Birch

[57] **ABSTRACT**

An electrical connector with a cable clamp which is movably secured with respect to the connector. The cable clamp is free to pivotally move in a plane containing longitudinal axes of the cable and the terminal portion of the electrical connector, but is restrained from movement in a direction along the longitudinal axes thereof.

4 Claims, 5 Drawing Figures

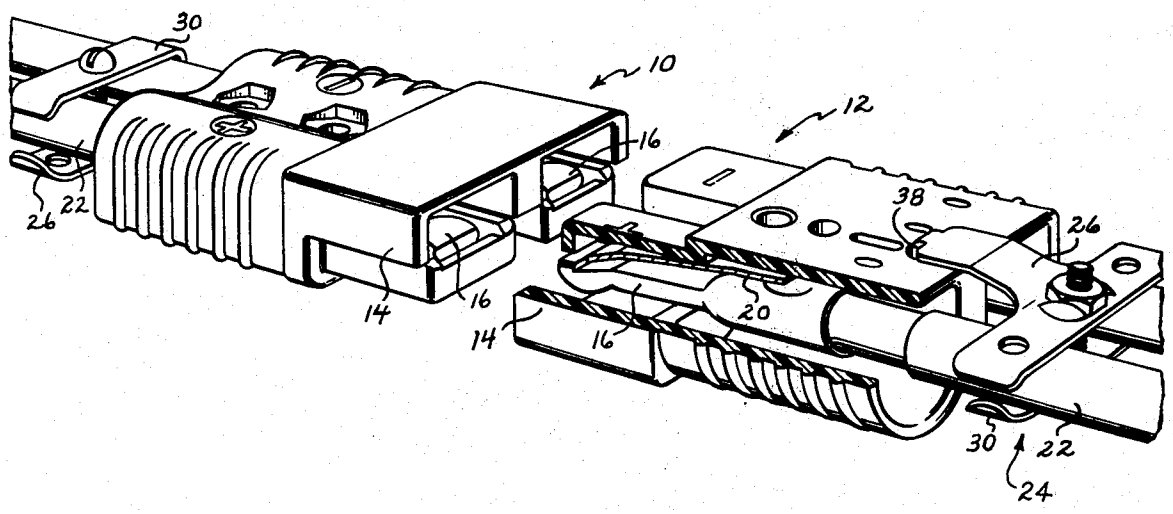

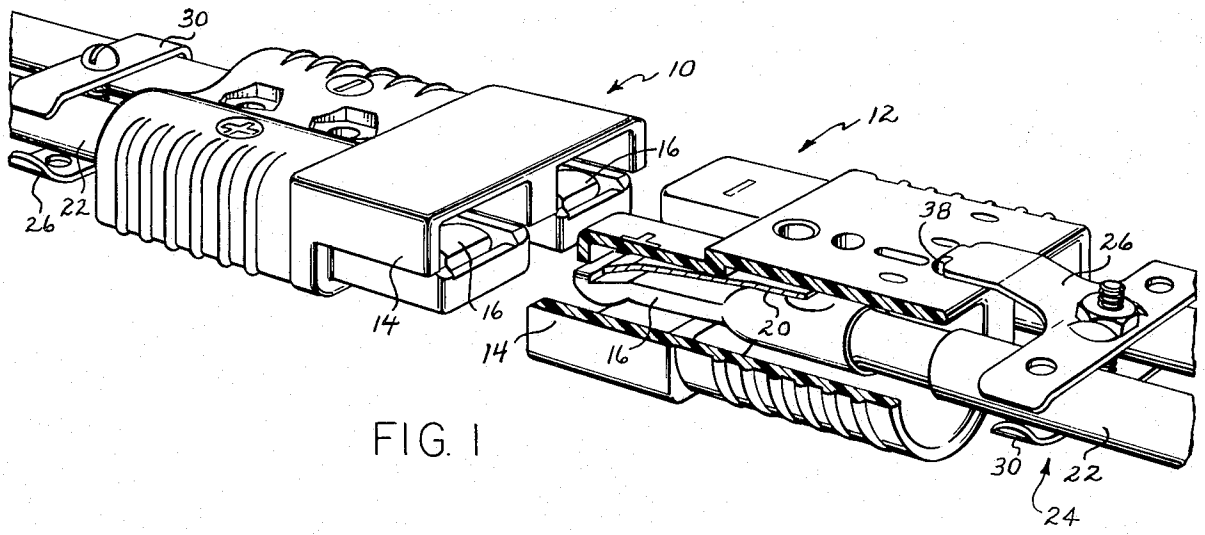

FIG. 1

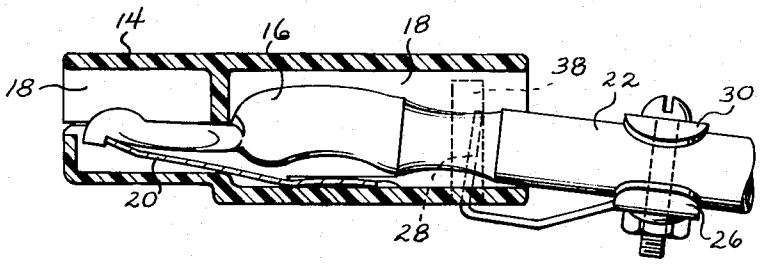

FIG. 2

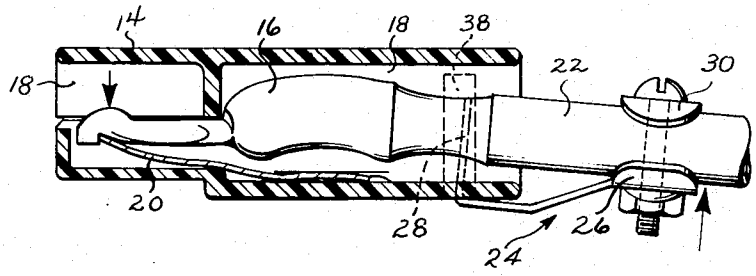

FIG. 3

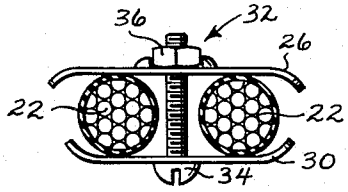

FIG. 4

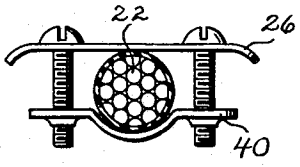

FIG. 5

ELECTRICAL CONNECTOR WITH MOVABLY MOUNTED CABLE CLAMP

BACKGROUND OF THE INVENTION

The present invention relates to electrical connectors and cable clamps in general and, more particularly, to an electrical connector and cable clamp which are movable with respect to each other.

Cable clamps for rigidly securing a cable with respect to an electrical connector are well known in the art. Single and plural-poled, genderless electrical connectors are also well known in the art. Representative examples of such connectors are shown in U.S. Pat. Nos. 3,091,746; 3,218,599; 3,259,870; 3,654,586 and 3,794,957. Currently available genderless connectors include those manufactured and sold by Anderson Power Products, Inc., 145 Newton Street, Boston, Mass. 02135, under the United States Registered Trademarks SB and POWERPOLE.

The above-mentioned genderless electrical connectors employ a rigid terminal member which is positioned within a hollow insulated housing and carried in detached relation to the walls of the housing. Suitable spring-biasing means are provided to spring load the terminal member. An electrical cable is mechanically and electrically secured to the terminal member, such as, by crimping and/or soldering.

The use of solder provides a good electrical connection between the terminal and cable. However, in certain instances solder is "wicked" up the cable beyond the terminal itself. The solder forms a rigid extension of the terminal. If a fixed cable clamp is used with such a solder "wicked" cable, the clamp forces the terminal member against the biasing spring thereby decreasing the spring-loading of the terminal member. The effect of the decreased spring-loading is to produce a high resistance electrical connection when the electrical connector is mated with another connector. The resulting I^2R loss can be sufficient to ruin the terminal.

It is accordingly a general object of the present invention to provide an improved cable clamp, cable and electrical connector combination.

It is a specific object of the invention to provide such a combination in which the cable clamp is free to move in certain directions, but is fixed with respect to the electrical connector to prevent movement of the cable in a direction along the longitudinal axes of the terminal member and the cable.

These objects and other objects are features of the invention which will be best understood from a detailed description of a preferred embodiment itself, selected for purposes of illustration and shown in the accompanying drawings in which:

FIG. 1 is a view in perspective of two genderless electrical connectors, one of which is partially broken away, and of their associated electrical cables and cable clamps;

FIG. 2 is a view in side elevation adn partial section showing the interrelationships of the electrical connector housing, rigid terminal member, cable and cable clamps;

FIG. 3 is a view similar to that shown in FIG. 2 illustrating the pivotal movement of the terminal member, cable and cable clamp when the connector is inserted into another connector;

FIG. 4 is a view in partial section showing a cable clamp for clamping a pair of cables; and,

FIG. 5 is a view in partial section showing a cable clamp for clamping a single cable.

Turning now to the drawings, there is shown a pair of conventional genderless, electrical connectors indicated generally by the reference numerals **10** and **12**. Each connector has a hollow insulated housing **14** within which is positioned at least one terminal member **16** which is carried in detached relation to the walls **18** of the connector housing **14**. The rigid terminal member **16** is spring biased by means of a spring **20** in an upwardly direction, as viewed in FIGS. **1, 2** and **3**.

An electrical cable **22** is mechanically and electrically secured to the rigid terminal member **16** by conventional means, such as, by crimping and/or soldering. The electrical cable **22** is held with respect to the connector housing **14** by means of a clamping assembly indicated generally by the reference numeral **24**. The clamping assembly **24** comprises a T-shaped clamping member **26** which has an upwardly extending finger element **28**, a removable clamping member **30** and means **32** for securing the T-shaped and removable clamping members together. The securing means comprises a conventional threaded screw **34** and nut **36**.

Looking specifically at FIGS. **2** and **3**, the upwardly extending finger element **28** of the fixed clamp **26** is positioned within a receptacle **38** formed in the insulated housing **14**. The axis of the finger element is substantially normal to the longitudinal axes of the terminal member **16** and the cable **22**. FIG. **2** illustrates the condition of the combination rigid terminal **16**, electrical cable **22** and clamping means of **32** in a rest or unconnected position. FIG. **3** illustrates the pivotal movement of the rigid terminal, electrical cable and clamping means combination when the electrical connector is inserted into another genderless electrical connector. The downward movement of the contact portion of the rigid terminal member **16** produces an upward movement of the cable **22** and clamping means **32** as shown by the arrows.

It will be appreciated from an inspection of FIGS. **1, 2** and **3** that the combination of the rigid terminal **16**, electrical cable **22** and clamping means **32** is free to move within a plane containing the longitudinal axes of the terminal member **16** and cable **22**. However, the combination is constrained from movement in a direction along the longitudinal axes of the terminal member and electrical cable. This arrangement permits the desired degree of movement of the electrical cable **22** with respect to the connector housing **14** while at the same time preventing removal of a cable and terminal member from the housing.

FIG. **4** illustrates in partial section the clamping means **32** for a double cable assembly as shown in FIG. **1**. FIG. **5** illustrates an alternative embodiment for use with a single cable. In the alternative embodiment a threaded removable clamping member **40** is employed in conjunction with the previously mentioned T-shaped clamping member **26** to hold the cable **22**.

Having described in detail a preferred embodiment of my invention, it will now be apparent to those skilled in the art that numerous modifications can be made therein without departing from the scope of the appended claims.

What I claim and desire to secure by Letters Patent of the United States is:

1. In combination,

A. An electric connector comprising:

1. a hollow insulated housing means;
2. at least one rigid terminal member positioned within the housing means and carried in detached relation to the walls thereof; and,
3. means for spring-biasing said rigid terminal member;

B. An electrical cable mechanically and electrically secured to said rigid terminal member; and,

C. Cable clamping means for clamping said electrical cable, said cable clamping means being secured with respect to said electrical connector housing means to permit (i) pivotal movement of said terminal member and electrical cable within a plane containing the longitudinal axes thereof while preventing movement of said terminal member and electrical cable in a direction along the longitudinal axes thereof and (ii) movement of said terminal member and electrical cable within a plane containing the longitudinal and transverse axes thereof.

2. The combination of claim **1** wherein said clamping means includes a finger element which is positioned within a receptacle formed in said housing means with the axis of said finger element being substantially normal to the longitudinal axes of the terminal member and electrical cable.

3. The combination of claim **1** wherein said clamping means comprises: a T-shaped clamping member having a finger element which extends outwardly from the plane of the T-shaped clamping member at substantially a right angle thereto, a second clamping member and means for securing said clamping members in clamped relationship with said electrical cable clamped there-between.

4. In combination,

A. A plural-pole, genderless electrical connector comprising:
1. A hollow insulated housing means;
2. first and second rigid terminal members positioned within said housing means and carried in detached relation to the walls thereof, said first and second rigid terminal members being adapted for telescopic engagement with corresponding first and second rigid terminal members of a duplicate genderless electrical connector; and,
3. means for spring-biasing said first and second rigid terminal members;

B. First and second electrical cables mechanically and electrically secured to said first and second rigid terminal members, respectively; and,

C. Cable clamping means for clamping said first and second electrical cables, said clamping means being secured with respect to said electrical connector housing means to permit (i) pivotal movement of each of said terminal members and its respective electrical cable within a plane containing the longitudinal axes thereof while preventing movement of said terminal member and electrical cable in a direction along the longitudinal axes thereof and (ii) movement of said terminal member and electrical cable within a plane containing the longitudinal and transverse axes thereof.

* * * * *