US008570673B2

(12) **United States Patent**
Lai et al.

(10) **Patent No.: US 8,570,673 B2**
(45) **Date of Patent: Oct. 29, 2013**

(54) **SPACER AND LENS MODULE**

(75) Inventors: **Chien-Nan Lai**, New Taipei (TW); **Hung-Lung Ho**, New Taipei (TW)

(73) Assignee: **Hon Hai Precision Industry Co., Ltd.**, New Taipei (TW)

(*) Notice: Subject to any disclaimer, the term of this patent is extended or adjusted under 35 U.S.C. 154(b) by 153 days.

(21) Appl. No.: **13/340,601**

(22) Filed: **Dec. 29, 2011**

(65) **Prior Publication Data**

US 2013/0050853 A1 Feb. 28, 2013

(30) **Foreign Application Priority Data**

Aug. 25, 2011 (TW) ..... 100130509 A

(51) **Int. Cl.**
G02B 7/02 (2006.01)

(52) **U.S. Cl.**
USPC **359/819**

(58) **Field of Classification Search**
USPC 359/811–819
See application file for complete search history.

(56) **References Cited**

U.S. PATENT DOCUMENTS

7,196,857 B2 * 3/2007 Kazama 359/811

* cited by examiner

Primary Examiner — Tuyen Tra
(74) *Attorney, Agent, or Firm* — Altis & Wispro Law Group, Inc.

(57) **ABSTRACT**

A spacer includes an object-side surface, an image-side surface, and an outer sidewall. The image-side surface is opposite to the object-side surface. The outer sidewall defines a first cutout and a second cutout. The first cutout and the second cutout penetrate through the object-side surface and the image-side surface. Contours of the first cutout and the second cutout are different from each other.

14 Claims, 3 Drawing Sheets

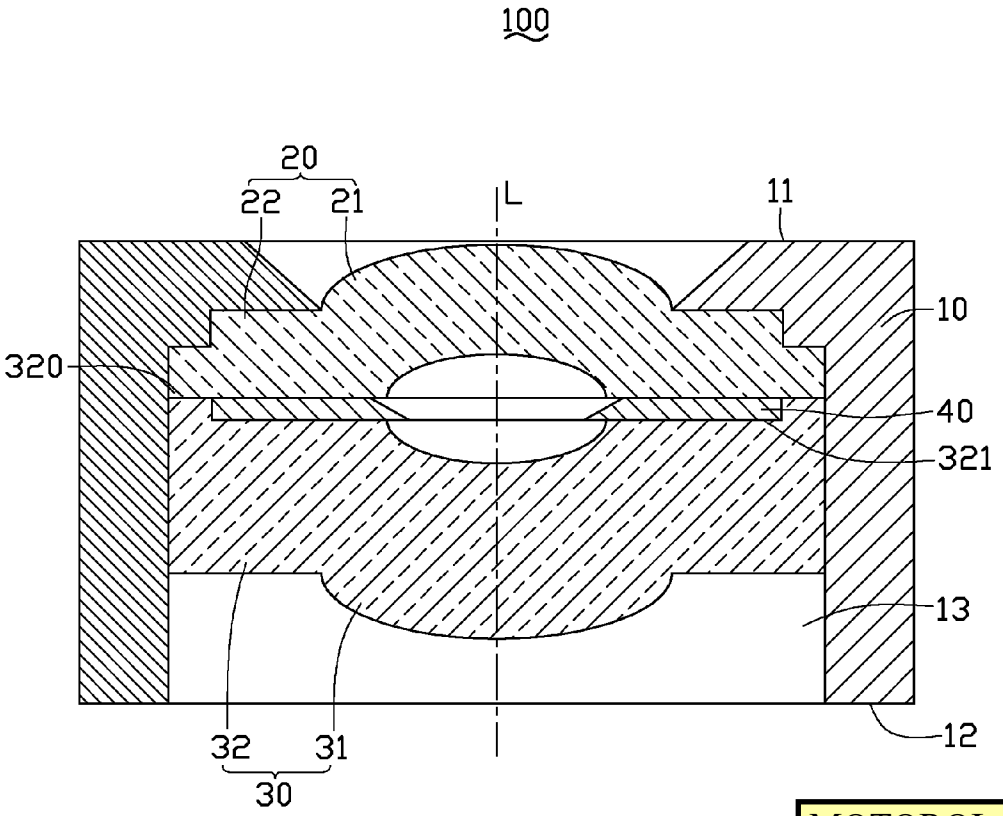

MOTOROLA MOBILITY
EXHIBIT 1020

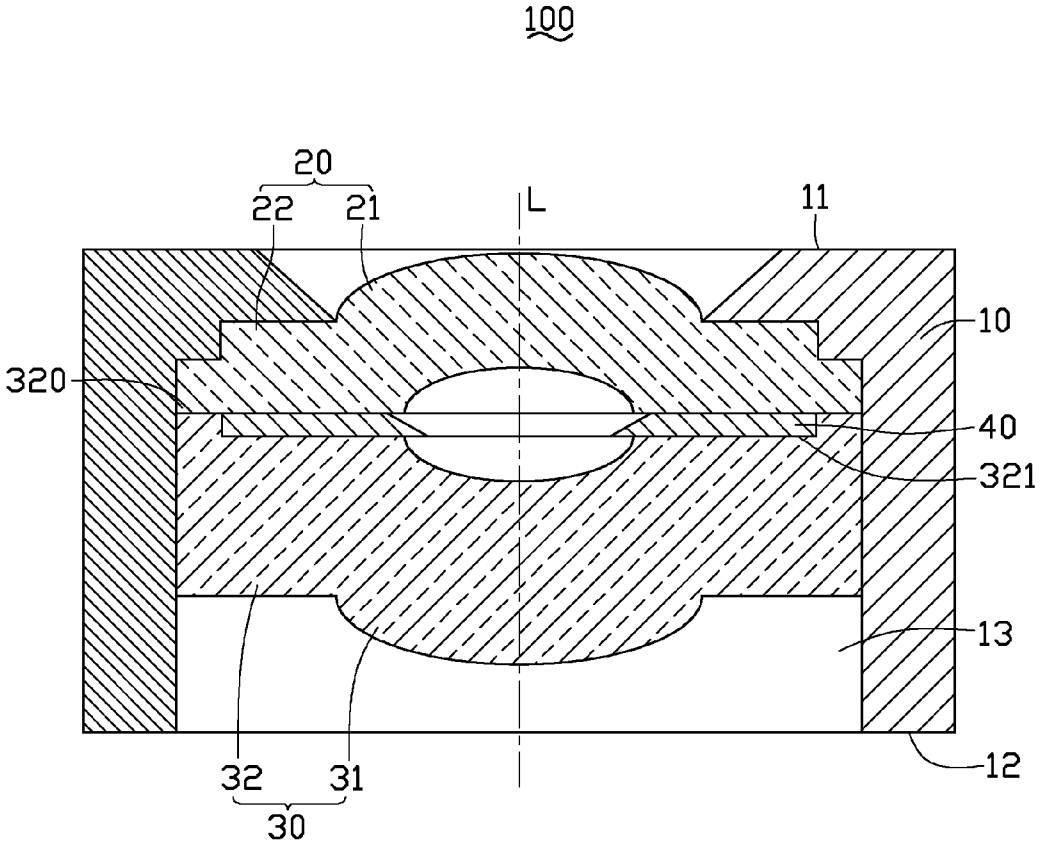

FIG. 1

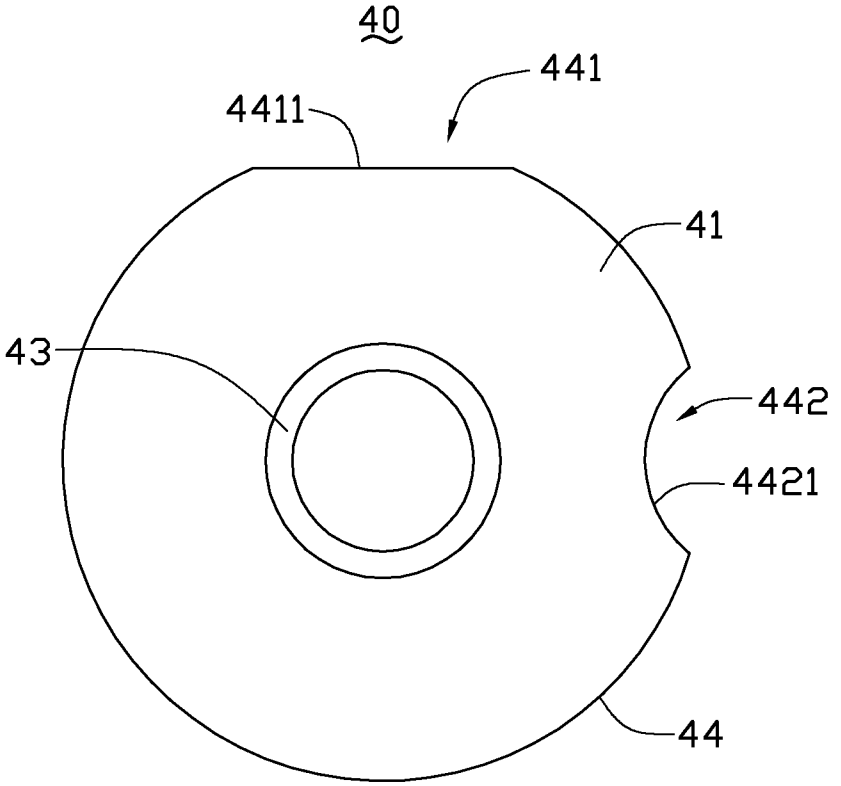

FIG. 2

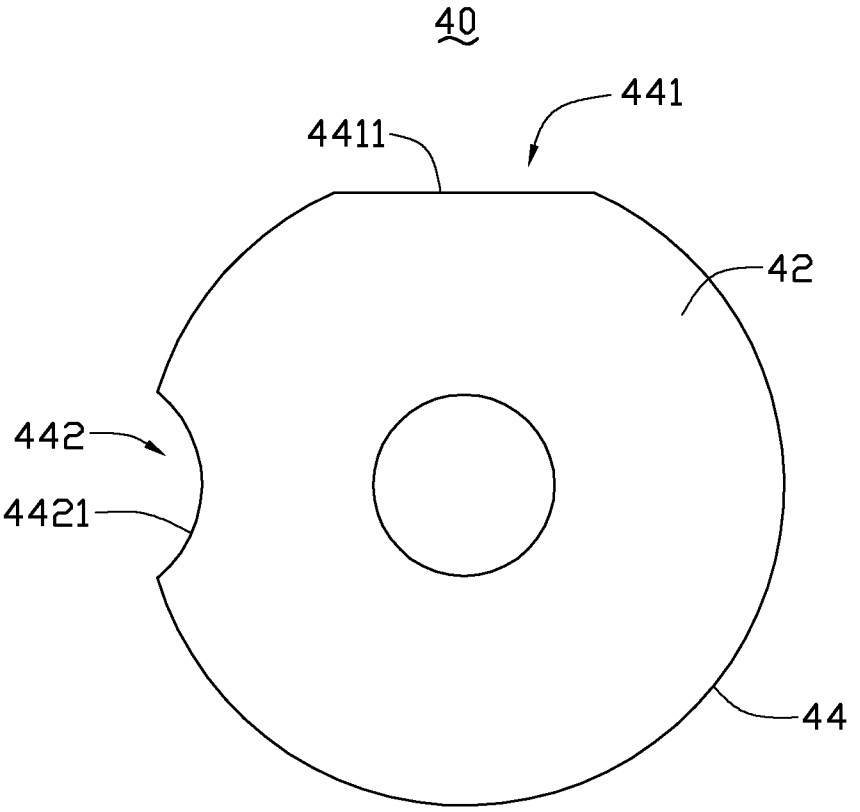

FIG. 3

SPACER AND LENS MODULE

BACKGROUND

1. Technical Field

The present disclosure relates to optical elements and, particularly, to a spacer and a lens module using the spacer.

2. Description of Related Art

In related art, a lens module includes a first lens, a second lens, and a spacer. The spacer is disposed between the first lens and the second lens and for blocking off-axis light rays to avoid aberrations. The spacer is typically annular and includes a cylindrical inner surface, and defines a chamfer facing an object-side end of the lens module to efficiently reflect off-axis light rays. The lens module is typically assembled manually. However, to reduce a total size of the lens module, the spacer is small, for example, an outer diameter of the spacer may be reduced to about 2 mm, and a width of the chamfer may be reduced to about 0.1 mm, such that it is difficult to indentify a proper orientation of the spacer such that chamfer faces the object-side end of the lens module by manual visual inspections.

Therefore, it is desirable to provide a spacer, which can overcome the limitations described.

BRIEF DESCRIPTION OF THE DRAWINGS

FIG. **1** is a cross-sectional schematic view of a lens module of an exemplary embodiment.

FIG. **2** is a front view of a spacer of the lens module of FIG. **1**.

FIG. **3** is a rear view of the spacer of the lens module of FIG. **1**.

DETAILED DESCRIPTION

Embodiments of the disclosure will now be described in detail, with reference to the accompanying drawings.

FIG. **1**, is a lens module **100**, according to an exemplary embodiment, including a lens barrel **10**, a first lens **20**, a second lens **30**, and a spacer **40**.

The lens barrel **10** is tubular, and includes an object-side end **11** and an image-side end **12** opposite to the object-side end **11**. The lens barrel **10** defines a through hole **13** extending from the object-side end **11** to the image-side end **12**. In this embodiment, the lens barrel **10** is made of light-shielding/opaque/black material(s).

The first lens **20** is received in the through hole **13**, adjacent to the object-side end **11**. The first lens **20** includes a first optical portion **21** and a first non-optical portion **22** surrounding the first optical portion **21**.

The second lens **30** is received in the through hole **13**, adjacent to the image-side end **12** in relative to the first lens **20**. The second lens **30** includes a second optical portion **31** and a second non-optical portion **32** surrounding the second optical portion **31**. In this embodiment, the second non-optical portion **32** defines a receiving recess **321** on an object-side surface **320** of the second lens **30**.

In this embodiment, the first lens **20** and the second lens **30** are made of glass or plastic, and may be spherical or aspheric lenses. The first optical portion **21** and the second optical portion **31** are for forming images. It is desirable that all light rays entering into the lens barrel **10** are collected to pass through the first optical portion **21** and the second optical portion **31**. The first non-optical portion **22** and the second non-optical portion **32** are incidental and it is desired that no or as few as possible, light rays pass therethrough. In other

configurations of the lens module **100**, other lenses can be included and arranged at appropriate positions at the two sides of the first lens **10** and the second lens **20**.

FIGS. **2-3**, show the spacer **40** is an annular plate and made of light-shielding/opaque/dark material(s). The spacer **40** is received in the receiving recess **321**, and is positioned between the first lens **20** and the second lens **30**. The spacer **40** has a cross-section perpendicular to an optical axis L of the lens module **100** greater than that of the first and second optical portions **21**, **31**. The spacer **40** includes an object-side surface **41**, an image-side surface **42**, an cylindrical inner sidewall **43**, and a cylindrical outer sidewall **44**. The object-side surface **41** faces the object-side end **11** of the lens module **10**, and the image-side surface **42** faces the image-side end **12**. The outer sidewall **44** is a cylindrical surface rotationally symmetrical about the optical axis L of the lens module **100**.

The inner sidewall **43** is inclined in relative to the optical axis L of the lens module **100** and faces the object-side end **11**. An included angle is formed between the inner sidewall **43** and the optical axis L of the lens module **100**. The included angle is open toward the object-side end **11**, and is larger than about **30** degrees but less than about 60 degrees. The spacer **40** is sandwiched between the first non-optical portion **22** and the second non-optical portion **32**.

The spacer **40** defines a first cutout **441** and a second cutout **442** on the outer sidewall **44**. Contours of the first cutout **441** and the second cutout **442** have different shapes, and are located at two different diameters of the spacer **40**. The first cutout **441** and the second cutout **442** respectively penetrate through the object-side surface **41** and the image-side surface **42**. A first projection of the spacer **40** projected in a direction from the object-side surface **41** to the image-side surface **42** is different from a second projection of the spacer **40** projected in another direction from the image-side surface **42** to the object-side surface **41**. In this embodiment, the contours of the first cutout **441** and the second cutout **442** can be distinctly distinguished by visual inspection.

The first cutout **441** includes a first lower surface **4411** connected to the outer sidewall **44**, and the first lower surface **4411** is flat. The second cutout **442** includes a second lower surface **4421** connected to the outer sidewall **44**, and the second lower surface **4421** is concave. The second cutout **442** is positioned at a clockwise direction of the first cutout **441** when looking at the object-side surface **41**. The second cutout **442** is positioned at a counterclockwise direction of the first cutout **441** when looking at the image-side surface **42**.

In this embodiment, a first vertical line from a center point of the first lower surface **4411** of the first cutout **441** to the optical axis L is perpendicular to a second vertical line from a center point of the second lower surface **4421** of the second cutout **442** to the optical axis L.

During assembling, the first lens **20** is first assembled into the lens barrel **10** by a special jig, an object-side surface of the first lens **20** is adjacent to the object-side end **11** of the lens module **10**. The spacer **40** is picked by tweezers, the operators observe the spacer **40** from the object-side surface **41** to the image-side surface **42** or from the image-side surface **42** to the object-side surface **41**. When the second cutout **442** is positioned at right of the first cutout **441**, that means this surface facing the operators is the object-side surface **41**. When the second cutout **442** is positioned at left of the first cutout **441**, that means this surface facing the operator is the image-side surface **42**. The spacer **40** is positioned in the receiving recess **321** by the image-side surface **42** facing the second lens **30**. The spacer **40** and the second lens **30** are received in the through hole **13**, and the object-side surface **41** faces the first lens **20**.

In this embodiment, in order to improve convenience of observing the spacer **40**. The operators can rotate the spacer **40** as the first cutout **441** is located at twelve o'clock. Therefore, the second cutout **442** can be directly observed to the right or left of the first cutout **441**.

Particular embodiments are shown and described by way of illustration only. The principles and the features of the present disclosure may be employed in various and numerous embodiments thereof without departing from the scope of the disclosure as claimed. The above-described embodiments illustrate the scope of the disclosure but do not restrict the scope of the disclosure.

What is claimed is:

1. A spacer, comprising:

an object-side surface;

an image-side surface opposite to the object-side surface; and

an outer sidewall defining a first cutout and a second cutout; the first cutout and the second cutout penetrating through the object-side surface and the image-side surface; contours of the first cutout and the second cutout being different from each other;

wherein a first projection of the spacer projected in a direction from the object-side surface to the image-side surface is different from a second projection of the spacer projected in another direction from the image-side surface to the object-side surface.

2. The spacer of claim **1**, wherein the first cutout comprises a first lower surface connecting the outer sidewall, and the first lower surface is flat; the second cutout comprises a second lower surface connecting the outer sidewall, and the second lower surface is concave.

3. The spacer of claim **2**, wherein the second cutout is positioned at a clockwise direction of the first cutout when looking at the object-side surface; the second cutout is positioned at a counterclockwise direction of the first cutout when looking at the image-side surface.

4. The spacer of claim **2**, wherein a first vertical line from a center point of the first lower surface to an optical axis of the spacer is substantially perpendicular to a second vertical line from a center point of the second lower surface to the optical axis.

5. The spacer of claim **1**, wherein the first cutout and the second cutout are located at two different diameters of the spacer.

6. The spacer of claim **1**, comprising an inner sidewall, wherein the inner sidewall is inclined in relative to the optical axis.

7. The spacer of claim **1**, wherein the outer sidewall is a cylindrical surface symmetrical about the optical axis of the spacer.

8. A lens module, comprising:

a lens barrel comprising an object-side end and an image-side end opposite to the object-side end;

a first lens received in the lens barrel, and adjacent to the object-side end;

a second lens received in the lens barrel, and adjacent to the image-side end in relative to the first lens; and

a spacer positioned between the first lens and the second lens, the spacer comprising:

an object-side surface;

an image-side surface opposite to the object-side surface; and

an outer sidewall defining a first cutout and a second cutout; the first cutout and the second cutout penetrating through the object-side surface and the image-side surface; contours of the first cutout and the second cutout being different from each other;

wherein a first projection of the spacer projected in a direction from the object-side surface to the image-side surface is different from a second projection of the spacer projected in another direction from the image-side surface to the object-side surface.

9. The lens module of claim **8**, wherein the first cutout comprises a first lower surface connecting the outer sidewall, and the first lower surface is flat; the second cutout comprises a second lower surface connecting the outer sidewall, and the second lower surface is concave.

10. The lens module of claim **9**, wherein the second cutout is positioned at a clockwise direction of the first cutout when looking at the object-side surface; the second cutout is positioned at a counterclockwise direction of the first cutout when looking at the image-side surface.

11. The lens module of claim **9**, wherein a first vertical line from a center point of the first lower surface to an optical axis of the spacer is substantially perpendicular to a second vertical line from a center point of the second lower surface to the optical axis.

12. The lens module of claim **8**, wherein the first cutout and the second cutout are located at two different diameters of the spacer.

13. The lens module of claim **8**, comprising an inner sidewall, wherein the inner sidewall is inclined in relative to the optical axis.

14. The lens module of claim **8**, wherein the outer sidewall is a cylindrical surface symmetrical about the optical axis of the spacer.

* * * * *