US008023203B2

(12) **United States Patent**
Shyu et al.

(10) **Patent No.: US 8,023,203 B2**
(45) **Date of Patent: Sep. 20, 2011**

(54) **MINIATURE THREE-PIECE OPTICAL IMAGING LENS WITH SHORT BACK FOCAL LENGTH**

(75) Inventors: **San-Woei Shyu**, Taipei (TW); **Bo-Yuan Shih**, Taipei (TW); **Ming-Che Kuo**, Taipei (TW)

(73) Assignee: **E-Pin Optical Industry Co., Ltd.**, Taipei (TW)

(*) Notice: Subject to any disclaimer, the term of this patent is extended or adjusted under 35 U.S.C. 154(b) by 0 days.

(21) Appl. No.: **12/819,040**

(22) Filed: **Jun. 18, 2010**

(65) **Prior Publication Data**

US 2010/0321795 A1 Dec. 23, 2010

(30) **Foreign Application Priority Data**

Jun. 19, 2009 (TW) ..... 98120738 A

(51) **Int. Cl.**
G02B 13/18 (2006.01)
G02B 3/02 (2006.01)
G02B 9/12 (2006.01)

(52) **U.S. Cl.** **359/716**; 359/784

(58) **Field of Classification Search** 359/784, 359/716, 740, 748, 708
See application file for complete search history.

(56) **References Cited**

U.S. PATENT DOCUMENTS

7,460,314 B2 * 12/2008 Shyu et al. 359/784

FOREIGN PATENT DOCUMENTS

CN	1670560	A	9/2005
CN	1873460	A	12/2006
CN	1945372	A	4/2007
EP	1840618	A1	10/2007
EP	1942363	A2	7/2008
JP	2004-163786		6/2004
JP	2005-338234		12/2005
JP	2005-352317		12/2005
JP	2006-098976		4/2006
JP	2007-010773		1/2007
JP	2007-047513		2/2007
JP	2007-094113		4/2007
JP	2007-121820		5/2007

(Continued)

Primary Examiner — Alicia M Harrington
(74) *Attorney, Agent, or Firm* — Muncy, Geissler, Olds & Lowe, PLLC

(57) **ABSTRACT**

An miniature three-piece optical imaging lens with short back focal length, along an optical axis from the object side to the image side including: a first lens of positive refractive power that is a meniscus aspherical lens having a convex surface on the object side, an aperture stop, a second lens of negative refractive power that is a meniscus aspherical lens having a convex surface on the image side, a third lens of negative refractive power that is an aspherical lens whose center is on the optical axis, while on the lens center the convex surface is on the object side and the concave surface is on the image side. Moreover, from the center of the third lens element toward the edge, the refractive power changes from negative power, through an inflection point, to positive power. Furthermore, the optical imaging lens further satisfies conditions:

$$0.25 \le \frac{bf}{TL} \le 0.4$$

wherein bf is back focal length, TL is total distance on the optical axis from the object side of the first lens to the image plane. Thereby, the imaging lens achieves effective aberration correction, high resolution and minimum total length.

6 Claims, 9 Drawing Sheets

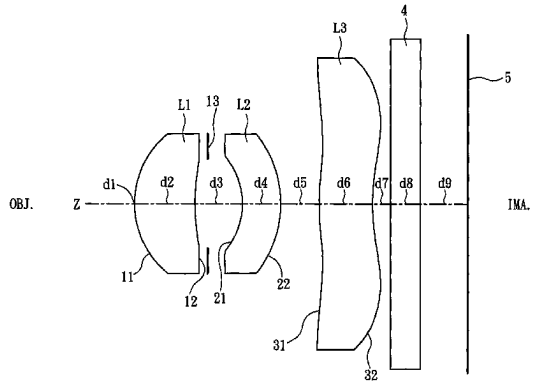

MOTOROLA MOBILITY
EXHIBIT 1022

FOREIGN PATENT DOCUMENTS

JP	2008-180744		8/2008
JP	2008-233222		10/2008
JP	2008-276200		11/2008
TW	200639432		5/2005
TW	M343167		2/2008
WO	WO-2007/039980	A1	4/2007

* cited by examiner

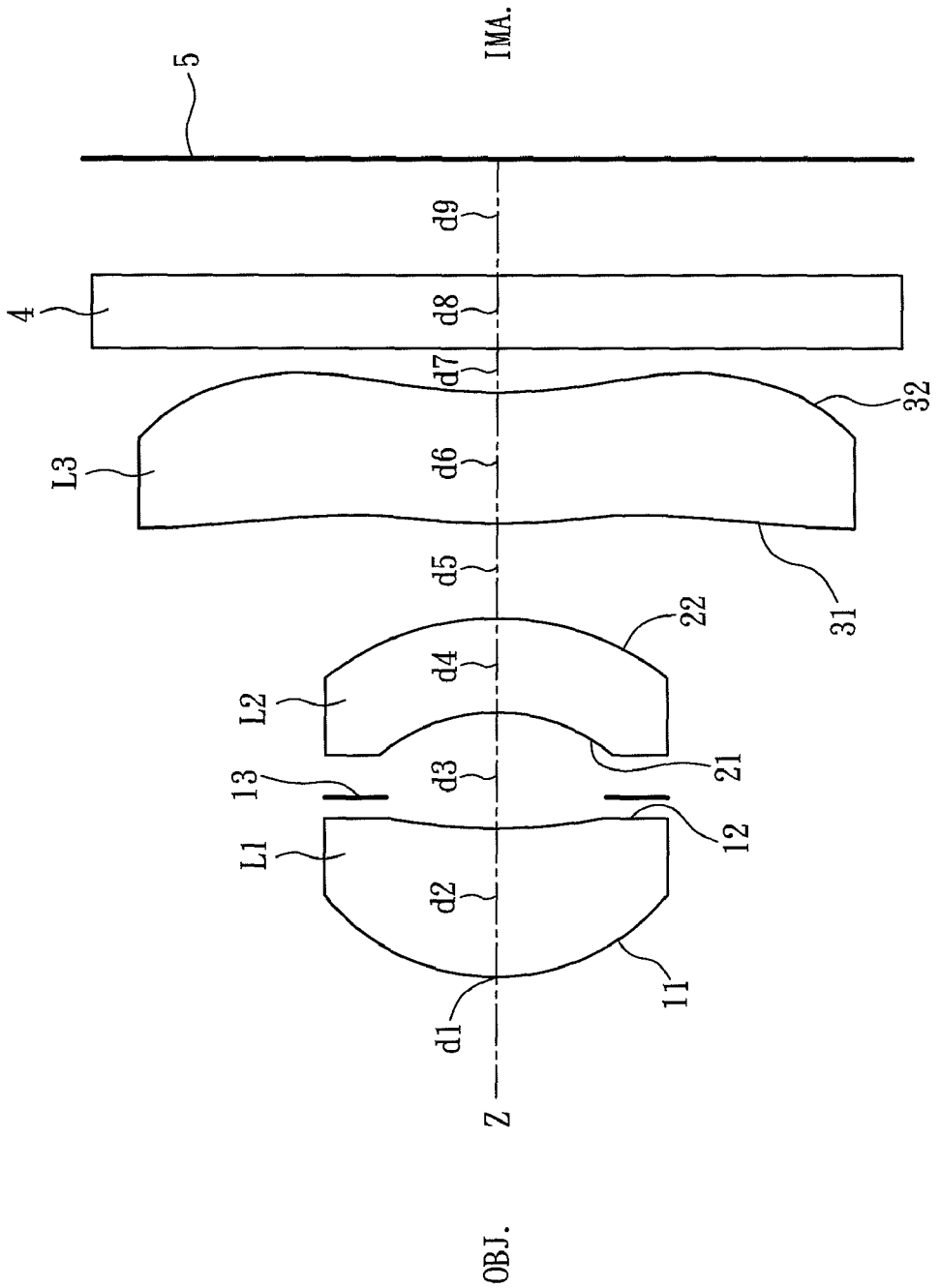

FIG. 1

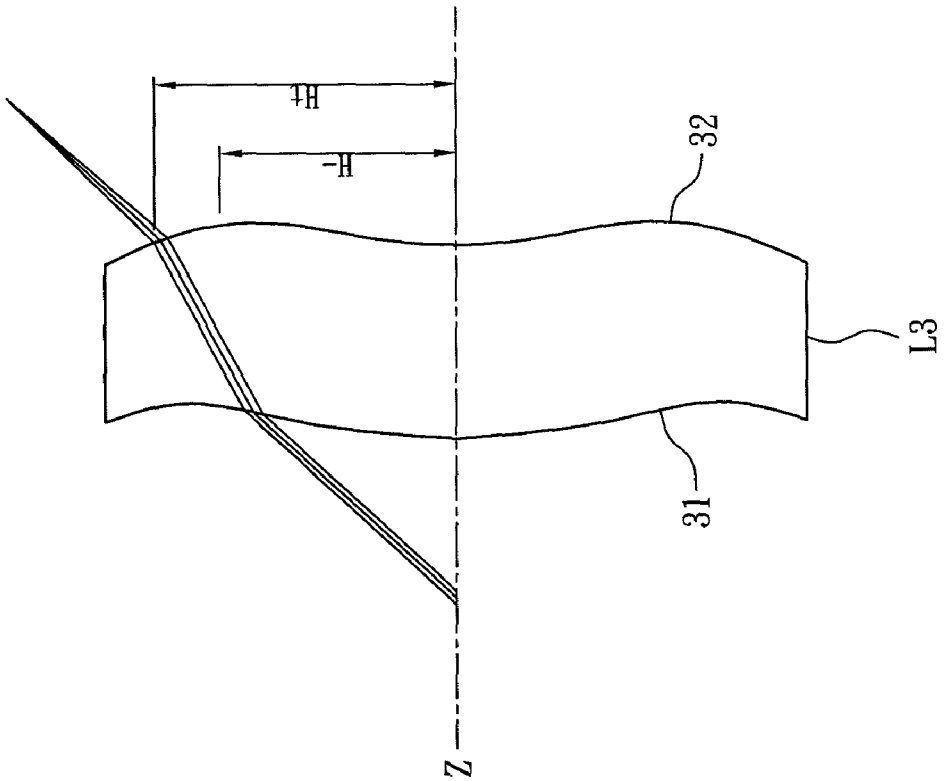

FIG. 2

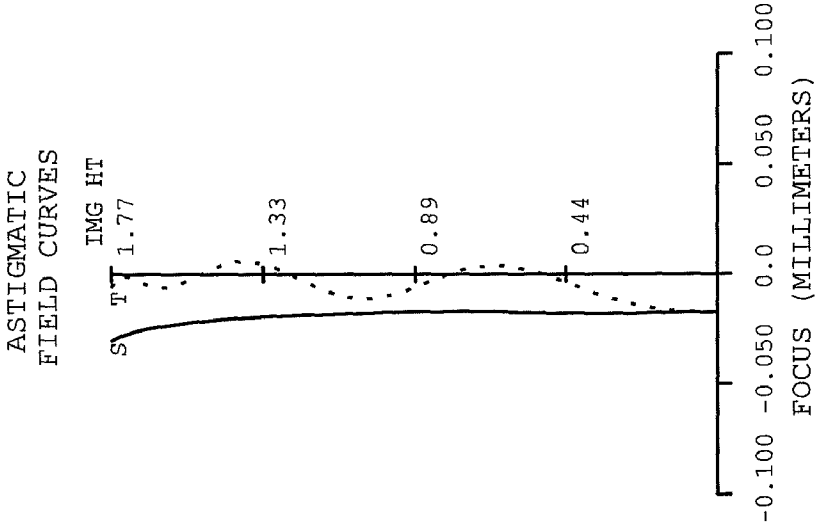
ASTIGMATIC
FIELD CURVES
IMG HT
1.77
1.33
0.89
0.44
S
T
-0.100
-0.050
0.0
0.050
0.100
FOCUS (MILLIMETERS)

FIG. 3

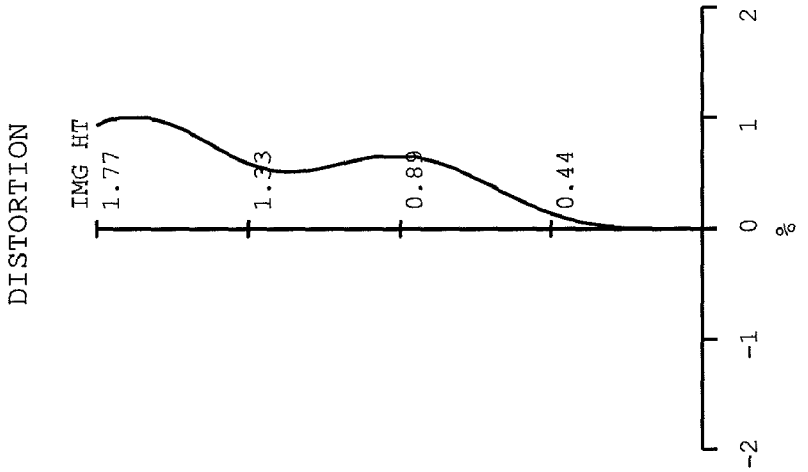
DISTORTION
IMG HT
1.77
1.33
0.89
0.44
-2
-1
0
1
2
%

FIG. 4

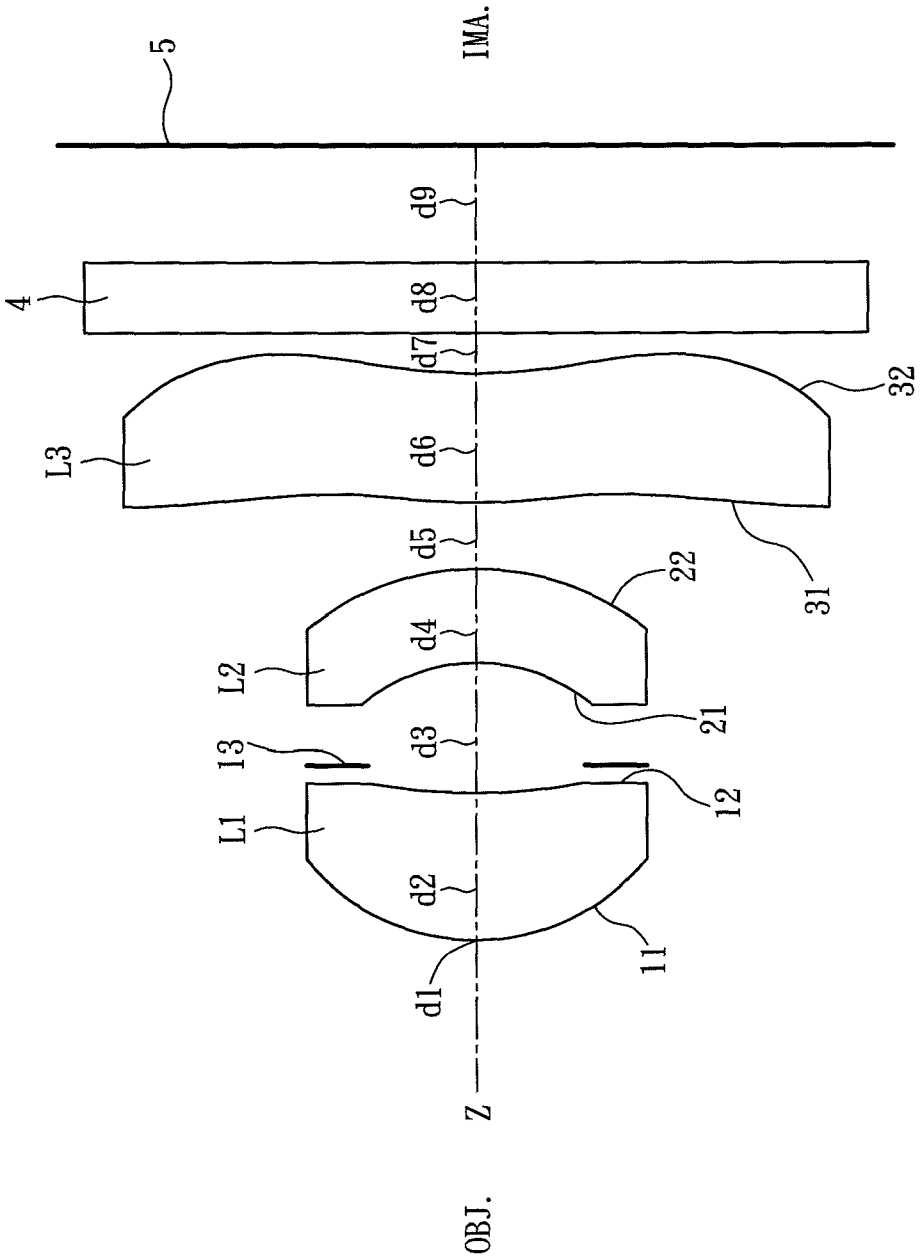

FIG. 5

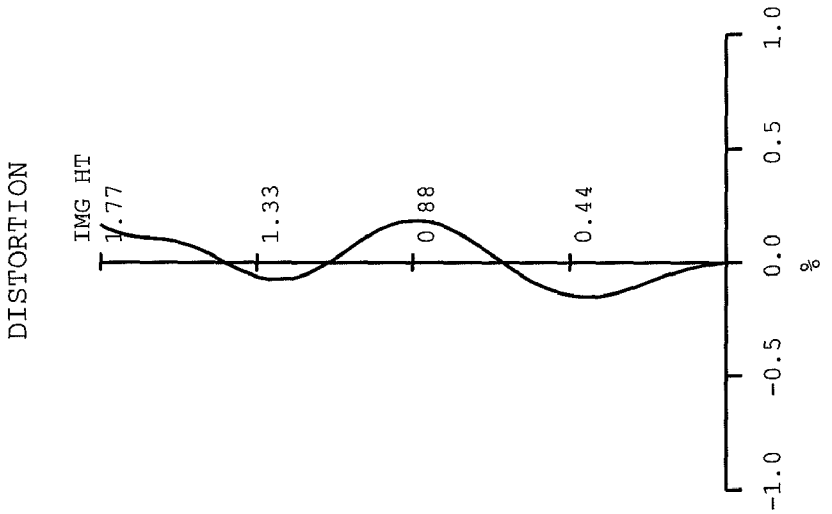
DISTORTION
IMG HT
1.77
1.33
0.88
0.44
-1.0
-0.5
0.0
0.5
1.0
%

FIG. 7

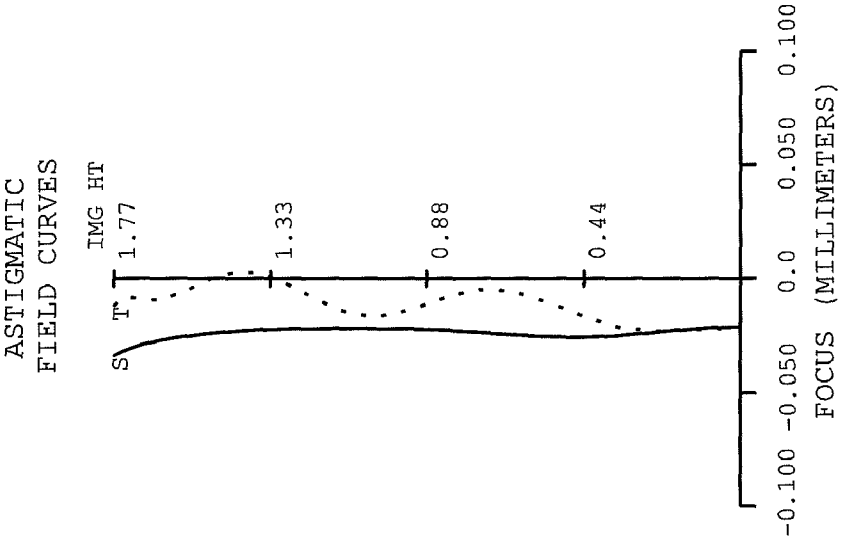
ASTIGMATIC
FIELD CURVES
IMG HT
1.77
1.33
0.88
0.44
S
T
-0.100
-0.050
0.0
0.050
0.100
FOCUS (MILLIMETERS)

FIG. 6

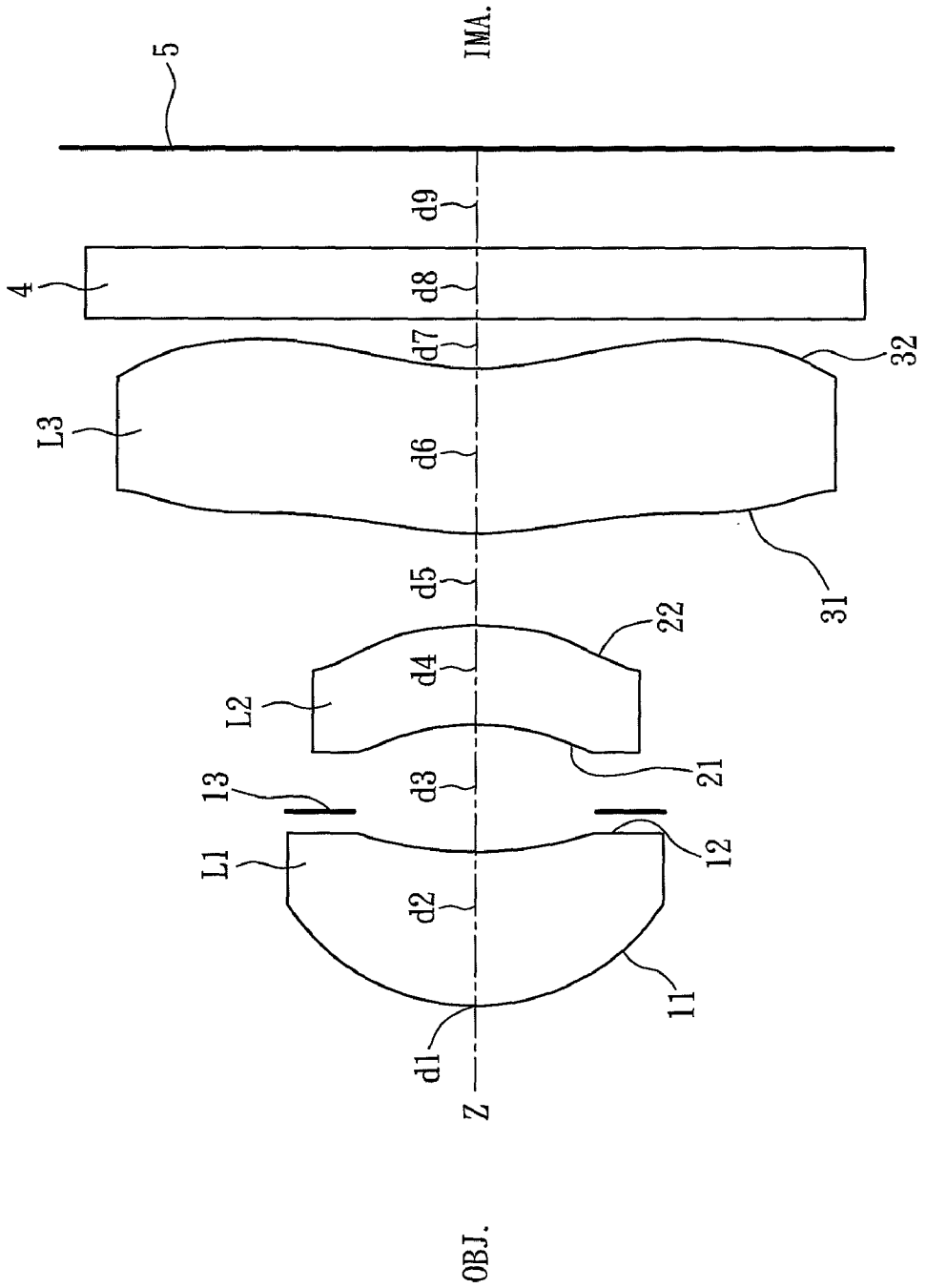

FIG. 8

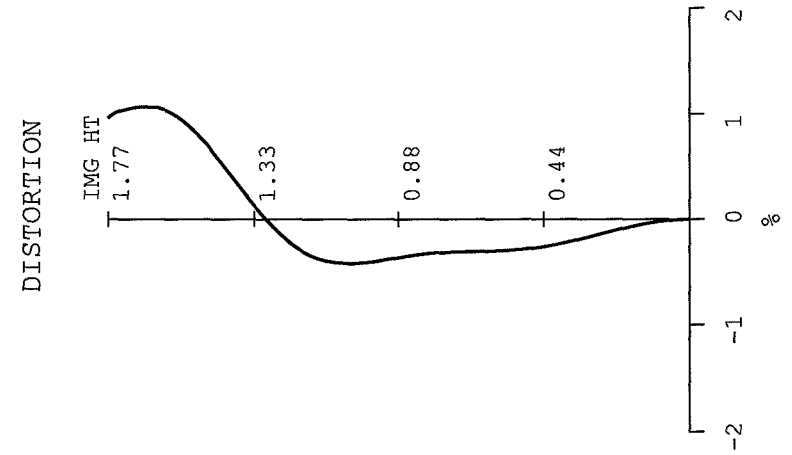
DISTORTION
IMG HT
1.77
1.33
0.88
0.44
-2
-1
0
1
2
%

FIG. 10

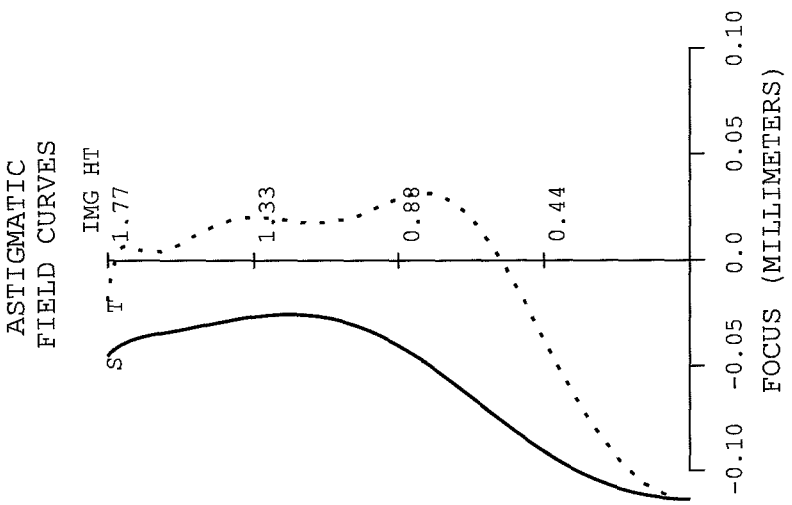
ASTIGMATIC
FIELD CURVES
IMG HT
S
T
1.77
1.33
0.88
0.44
-0.10
-0.05
0.0
0.05
0.10
FOCUS (MILLIMETERS)

FIG. 9

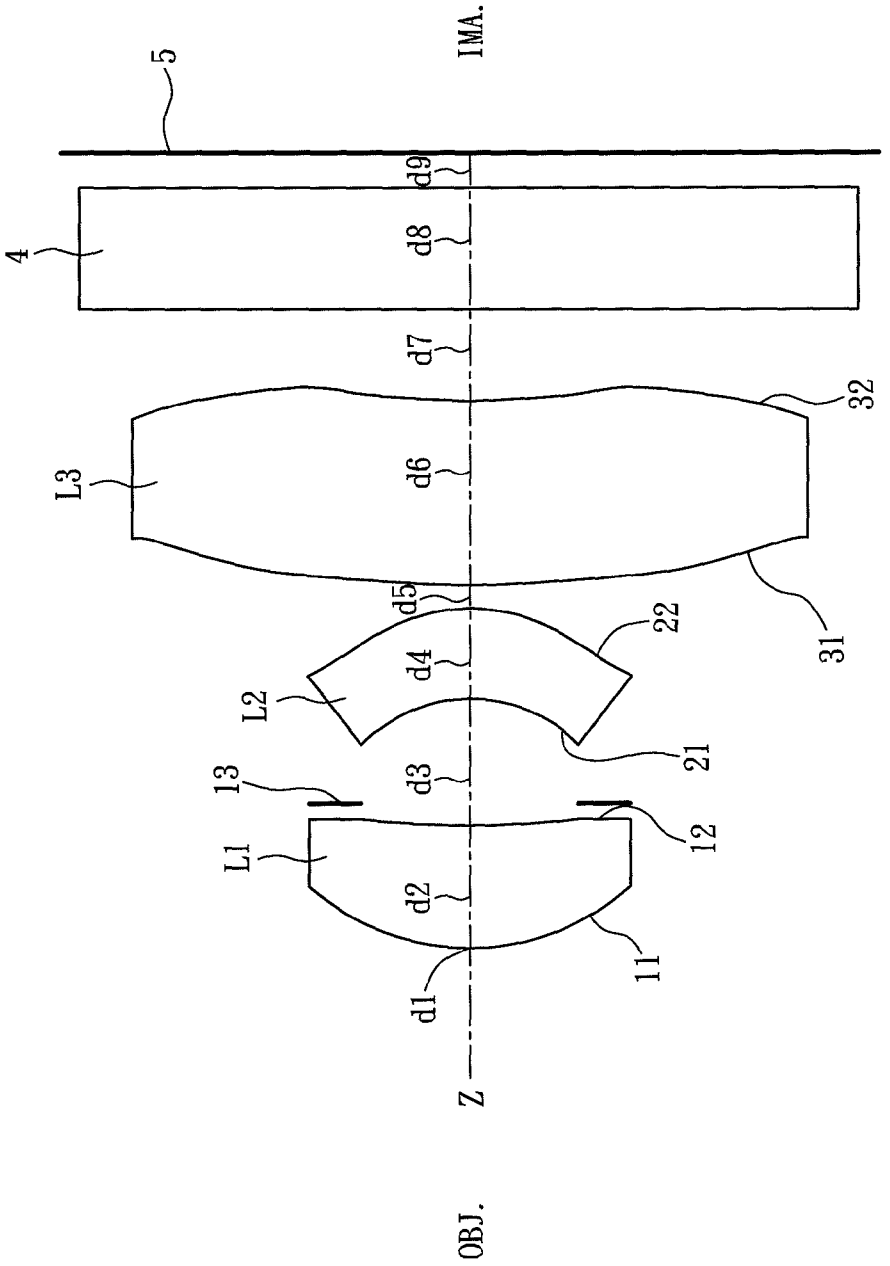

FIG. 11

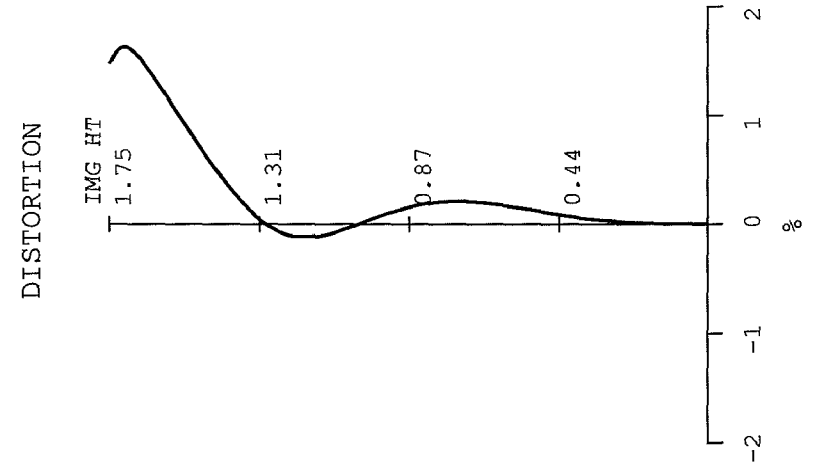
DISTORTION
IMG HT
1.75
1.31
0.87
0.44
-2
-1
0
1
2
%

FIG. 13

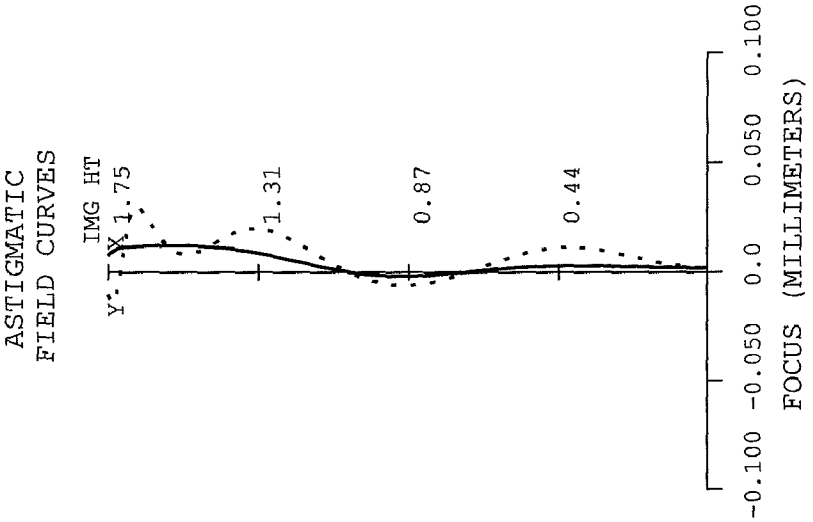
ASTIGMATIC
FIELD CURVES
IMG HT
1.75
1.31
0.87
0.44
Y'
X
-0.100
-0.050
0.0
0.050
0.100
FOCUS (MILLIMETERS)

FIG. 12

MINIATURE THREE-PIECE OPTICAL IMAGING LENS WITH SHORT BACK FOCAL LENGTH

BACKGROUND OF THE INVENTION

The present invention relates to an imaging lens, and more particularly to an optical imaging lens for mobile phones or image sensors such as CCD (Charge Coupled Device) or CMOS (Complementary Metal Oxide Semiconductor) formed by three elements of lens with features of short back focal length, short overall (total) length and low cost.

Due to fast development of modern technology, electronics have becoming more compact and multifunctional. A lot of electronics such as digital cameras, PC (personal computer) cameras, network cameras, mobile phones, even personal digital assistants are equipped with image capturing devices. For convenience of easy-carrying and requirement of humanization, the image capturing devices requires good image quality, compact volume and low cost. Especially for applications on mobile phones, the above requirements are getting more important.

Due to many materials available for making the lens and better correcting effect for color aberration, conventional spherical ground glass lenses have been widely adopted in optical industry field. However, the spherical ground glass lenses have poor effect on correction of spherical aberration and astigmatic aberration when being applied under condition of a smaller f number and wide angle of field. In order to improve above disadvantages of the conventional spherical ground glass lenses, the image capturing devices available now use aspherical plastic lenses or aspherical molded glass lenses to replace conventional spherical ground glass lenses for better imaging quality. For example, refer to the lenses disclosed the optical imaging lens are formed by three lens elements, such as US2007/0091457, U.S. Pat. Nos. 6,515,809 , 7,262,925, US 2007/0195432, US2005/0128334, JP 2007-121820, JP2005-352317, JP 2004-163786, JP 2007-094113, JP 2005-338234, JP 2007-047513, and JP 2006-098976 etc. The differences among embodiments of above patents are in components or combinations of components. For example, the three lens elements are all in meniscus shape or the first and the second lens elements are meniscus while the third lens element is in plano-concave shape or plano-convex shape. Or the convex surface/concave surface of the first/second/third lens elements can be arranged on the object/image side. Or the refractive power of the three lens elements may vary. For example, refractive power of the first, the second and the third lens elements are respectively positive, negative, positive or positive, positive, negative in sequence. Moreover, the three lens set/lens element respectively satisfy various optical parameters such as f (effective focal length of the whole optical imaging lens), d (distance between the object side and the image side of the first lens element), R_{11} (radius of curvature of the object side of the first lens element), R_{12} (radius of curvature of the image side of the first lens element), f_1 (effective focal length of the first lens element), f_2 (effective focal length of the second lens element), and f_3 (effective focal length of the third lens element), as the embodiment shown in Japanese patent No. 3717488. Thus it is learned that the design of a three-element type optical imaging lens depends on optical requirements that result from combinations of various lens in different shapes and with different functions.

In recent years, the optical imaging lens are getting more compact with shorter focal length and better aberration correction for being applied to various portable electronics such as cameras, camera phones, and PDA. In different designs of compact three-element type optical imaging lens, the lens having a first lens element with positive refractive power, a second lens element with negative refractive power, a third lens element with an inflection point that changes the refractive power (also called M-shaped lens) achieves most compact requirement. As to different imaging method, the lens having a first lens element with positive refractive power, a second lens element with negative refractive power, a third M-shaped lens element with positive refractive power are disclosed in EP1830210, JP2008-139853, JP2006-178328, U.S. Pat. Nos. 7,397,613, 7,486,328, 7,423,817, 7,468,847, 7,515,358, US2007/0195426, US2007/0217034, US2007/0229986, US2008/0239510, TWM343167, TW200639432, CN1670560, CN1873460, and so on. The lens having a first lens element with positive refractive power, a second lens element with negative refractive power, a third M-shaped lens element with negative refractive power are disclosed in EP1840618, EP1942363, U.S. Pat. Nos. 7,460,315, 7,460,314, 7,450,323, 7,511,899, US2007/0229987, US2008/0225401, US2008/0266679, US2007/0195426, JP3816093, JP2008-276200, JP2008-233222, JP2007-010773, WO2007039980, CN1945372, and so on.

Applying for optical imaging lens, especially an optical imaging lens for mobile phones and network camera, the users are in urgent need of the imaging lens system with small effective radius, short overall length, short back focal length, and good aberration correction. However, in order to achieve the above-mentioned needs, the prior arts utilize different composition of lenses, different shapes of lenses or different related optical parameters. In order to achieve the convenience for designing and manufacturing the lens, this present invention provides an optical imaging lens with short back focal length, especially utilize a second lens with a relative longer focal length so as to decrease the back focal length effectively for being applied to mobile phones or imaging system more easily.

SUMMARY OF THE INVENTION

Therefore it is a primary object of the present invention to provide a miniature three-piece optical imaging lens with short back focal length, along an optical axis from the object side to the image side including: a first lens of positive refractive power that is a meniscus aspherical lens having a convex surface on the object side, an aperture stop, a second lens of negative refractive power that is a meniscus aspherical lens having a convex surface on the image side, a third lens of negative refractive power that is an aspherical lens whose center is on the optical axis while on the lens center, the convex surface is on the object side and the concave surface is on the image side. Moreover, from the center of the third lens element toward the edge, the refractive power changes from negative power, through an inflection point, to positive power. Furthermore, the second lens has a relative longer focal length so as to decrease the back focal length. The optical imaging lens further satisfies following conditions:

$$0.25 \le \frac{bf}{TL} \le 0.4 \quad (1)$$

$$0.001 \le \frac{\Delta}{f} \le 0.006 \quad (2)$$

$$0.38 \le \frac{H}{H_t} \le 0.7 \quad (3)$$

-continued

$$-0.12 \le \frac{f_1}{f_2} \le -0.01 \quad (4)$$

$$0.25 \le \frac{d_3 + d_5 + d_7 + d_9}{f} \le 0.5 \quad (5)$$

$$0.7 \le \frac{f_1}{f} \le 1.2 \quad (6)$$

$$-0.2 \le \frac{R_{21} - R_{22}}{R_{21} + R_{22}} \le -0.06 \quad (7)$$

wherein f is effective focal length of the optical imaging lens, bf is back focal length, TL is total distance on the optical axis from the object side **11** of the first lens to the image plane, Δ is the absolute value of longitudinal chromatic aberrations at Fraunhofer F curve and C curve wavelengths, H is perpendicular distance from the inflection point on the image side of the third lens to its intersection point of the optical axis, H_t is perpendicular distance from the maximum optical effective point on the image side of the third lens to the optical axis (see FIG. **2**), f_1 is effective focal length of the first lens, f_2 is effective focal length of the second lens, d_3 is distance on the optical axis from the image side **12** of the first lens L**1** to the object side **21** of the second lens L**1**, d_5 is distance on the optical axis from the image side **22** of the second lens L**2** to the object side **31** of the third lens L**3**, d_7 is distance on the optical axis from the image side **32** of the third lens L**3** to the object side of the IR cut-off filter **4**, d_9 is distance on the optical axis from the image side of the IR cut-off filter **4** to the image plane of image sensor **5**, R_{21} is radius of curvature of the object side **21** of the second lens L**2** and R_{22} is radius of curvature of the image side **22** of the second lens L**2**. Thereby, the imaging lens of the present invention achieves effective aberration correction, high resolution and minimum total length. Therefore, the imaging lens with smaller volume, lower cost has broader applications.

BRIEF DESCRIPTION OF THE DRAWINGS

FIG. **1** is a schematic drawing of an optical structure of the first embodiment according to the present invention;

FIG. **2** is a side view of a third lens with the inflection point of an embodiment according to the present invention;

FIG. **3** shows field curvature of an image of the first embodiment in FIG. **1** according to the present invention;

FIG. **4** shows distortion of an image of the first embodiment in FIG. **1** according to the present invention;

FIG. **5** is a schematic drawing of an optical structure of the second embodiment according to the present invention;

FIG. **6** shows field curvature of an image of the second embodiment in FIG. **5** according to the present invention;

FIG. **7** shows distortion of an image of an embodiment in FIG. **5** according to the present invention;

FIG. **8** is a schematic drawing of an optical structure of the third embodiment according to the present invention;

FIG. **9** shows field curvature of an image of the embodiment in FIG. **8** according to the present invention;

FIG. **10** shows distortion of an image of an embodiment in FIG. **8** according to the present invention.

FIG. **11** is a schematic drawing of an optical structure of the fourth embodiment according to the present invention;

FIG. **12** shows field curvature of an image of the fourth embodiment in FIG. **11** according to the present invention;

FIG. **13** shows distortion of an image of the fourth embodiment in FIG. **11** according to the present invention.

DETAILED DESCRIPTION OF THE PREFERRED EMBODIMENT

Refer to FIG. **1**, a miniature three-piece optical imaging lens with short back focal length of the present invention includes a first lens L**1**, an aperture stop **13**, a second lens L**2**, a third lens L**3**, an IR(infrared) cut-off filter **4** and an image sensor **5** along the optical axis Z, in order from the object side to the image side. While capturing image, light from the object passes the first lens L**1**, the second lens L**2**, the third lens L**3** and the IR cut-off filter **4**, then the light is detected by the image sensor **5**, and an image is formed.

The first lens L**1** with positive refractive power is a meniscus aspherical lens whose object side **11** (the side facing the object) is a convex surface and an image side **12** (the side facing the image) thereof is a concave surface while at least one of the object side (convex surface) **11** and the image side (concave surface) **12** is an aspherical surface or both sides **11**, **12** are aspherical. The first lens L**1** is made from glass or plastic whose refractive index N_{d1} is larger than 1.5 and the abbe number v_{d1} is larger than 50.

The second lens L**2** with negative refractive power is a meniscus aspherical lens made from glass or plastic whose refractive index N_{d2} is larger than 1.56 and the abbe number v_{d2} is larger than 25. The second lens L**2** includes an object side **21** (the side facing the object) that is a concave surface and an image side **22** (the side facing the image) thereof is a convex surface while at least one of the concave surface **21** and the convex surface **22** is an aspherical surface or both sides **21**, **22** are aspherical. In order to achieve the convenience for designing and manufacturing the lens, the second lens has a relative longer focal length ora small absolute number of equation (4) to decrease the back focal length.

The third lens L**3** is an aspherical lens with the refractive power changing gradually from negative to positive refractive power and is made from glass or plastic whose refractive index N_{d3} is larger than 1.5 and the abbe number V_{d2} is larger than 55. The object side **31** on the lens center of the third lens L**3** is a convex surface while an image side **32** on the lens center of the third lens L**3** is a concave surface. From the center of the lens L**3** toward the edge, the refractive power changes from negative to positive, through an inflection point.

As shown in FIG. **2**, a cross section of the third lens L**3** shows that the center is concave while the neighboring of center is convex, so called as M-shape. Therefore, on the wavelike image side **32** and the object side **31** within the effective optical surface, the curvature changes from a concave/convex surface of the lens center to the convex/concave surface of the lens peripheral and the inflection point formed between the conversion of the refractive power. When a tangent line passes through the inflection point and crosses the optical axis vertically, the distance from the inflection point to the optical axis is the height of the lens with negative refractive power and is labeled as H as shown in FIG. **2**. That's the distance from the inflection point of the third lens element L**3** to the optical axis Z. The distance from the maximum optical effective point of the third lens L**3** to the optical axis Z is labeled as H_t. The ratio of H to H_t represents the area changing from negative refractive power to positive refractive power. In order to have better image, the preferred ratio is between 38% and 70%, satisfying the equation (3).

The IR cut-off filter **4** is a lens or a film processed by coating technology for filtering infrared light. The image sensor **5** is a CCD (Charge Coupled Device) or CMOS

(Complementary Metal Oxide Semiconductor). The aperture stop **13** is arranged between the first lens L**1** and the second lens L**2**, as shown in FIG. **1**, or is against on the image side (concave surface) **12** of the first lens L**1**.

The three-piece optical imaging lens with short back focal length of the present invention satisfies following equations (1) to (7):

$$0.25 \le \frac{bf}{TL} \le 0.4 \quad (1)$$

$$0.001 \le \frac{\Delta}{f} \le 0.006 \quad (2)$$

$$0.38 \le \frac{H}{H_t} \le 0.7 \quad (3)$$

$$-0.12 \le \frac{f_1}{f_2} \le -0.01 \quad (4)$$

$$0.25 \le \frac{d_3 + d_5 + d_7 + d_9}{f} \le 0.5 \quad (5)$$

$$0.7 \le \frac{f_1}{f} \le 1.2 \quad (6)$$

$$-0.2 \le \frac{R_{21} - R_{22}}{R_{21} + R_{22}} \le -0.06 \quad (7)$$

In order to achieve the primary object of the present invention, the both optical surfaces of the first lens L**1**, the second lens L**2**, or the third lens L**3** are preferred, but not limited, to be designed to be aspherical surfaces while the Aspherical Surface Formula is as equation (8):

$$Z = \frac{ch^2}{1 + \sqrt{(1 - (1 + K)c^2h^2)}} + A_4h^4 + A_6h^6 + A_8h^8 + A_{10}h^{10} + A_{12}h^{12} + A_{14}h^{14} \quad (8)$$

wherein c is a radius of curvature,
h represents height of lens,
K is a conic constant,
$A_4, A_6, A_8, A_{10}, A_{12}, A_{14}$ respectively are 4th, 6th, 8th, 10th, 12th, 14th order aspherical coefficient.

The first lens L**1**, the second lens L**2** and the third lens L**3** can be made from glass or plastic. In accordance with above structure, the aberration is effectively corrected and the main incident light angle is reduced so that the lens has high resolution and minimized total length and back focal length so as to make the imaging lens with compact volume and lower cost to improve the applications of the lens.

The First Embodiment

Refer from FIG. **1** and FIG. **3**, **4** showing this embodiment. In order from the object side to the image side, the optical surface numbers, the radius of curvature R (mm) of each optical surface on the optical axis, the on-axis surface spacing d (mm) of each optical surface on the optical axis, the refractive index N_d of each lens, and the Abbe's number v_d of each lens is listing in Table 1.

TABLE 1

Fno = 2.8 f = 2.7468 FOV = 64.0				
Surface No.	R	d (mm)	Nd	νd
1 OBJ	∞	0		
2 R1*	0.8854	0.596	1.544	56.1
3 R2*	2.4738	0.441		
STOP				
4 R3*	−0.7594	0.388	1.585	30
5 R4*	−0.93317	0.324		
6 R5*	2.7416	0.54	1.531	56
7 R6*	1.7544	0.178		
8 IR	∞	0.3		
9		0.329		
10 IMAGE	∞			

*Aspheric

The aspheric coefficients of equation (8) of each optical surface are listing in Table 2.

TABLE 2

	K	A4	A6	A8	A10	A12
R1*	−1.0201E+00	1.9252E−01	2.4606E−01	−2.4230E−01	8.5688E−01	−5.1217E−01
R2*	−5.0000E+01	6.6491E−01	−6.0390E+00	5.1240E+01	−2.3191E+02	3.9898E+02
R3*	−6.9428E−01	−4.9561E−01	−1.7596E+00	1.5883E+01	−6.2732E+01	5.8837E+01
R4*	−1.1693E+00	−2.9765E−01	−4.3670E−02	3.2347E+00	−4.9671E+00	2.9836E+00
R5*	−2.0737E+01	−4.5772E−01	6.3911E−01	−4.3094E−01	1.4724E−01	−2.0211E+02
R6*	−1.8458E+01	−1.6060E−01	−2.0228E−03	5.4425E−02	−3.0104E−02	4.9284E−03

In this embodiment, the first lens L**1** is made from plastic that has the refractive index N_{d1} of 1.54, and the Abbe's number v_{d1} of 56.1, the second lens L**2** is made from plastic that has the refractive index N_{d2} of 1.58 and the Abbe's number V_{d2} of 30, and the third lens L**3** is made from glass that has the refractive index N_{d3} of 1.53 and the Abbe's number V_{d3} of 56 while the IR cut-off filter **4** is made from BSC7 glass.

The systematic effective focal length f of this embodiment is 2.7468 mm while the focal length f_1 of the first lens L**1** is 2.2384 mm, the focal length f_2 of the second lens L**2** is −41.4011 mm, and the focal length f_3 of the third lens L**3** is −11.3204 mm. The inflection point on the image side **32** of the third lens L**3** is positioned at 1.42 mm. That means these parameters listing in Table 3 satisfy the equation (1) to equation (7):

TABLE 3

$\frac{bf}{TL}$ =	0.2965
$\frac{\Delta}{f}$ =	0.0045
$\frac{H}{H_t}$ =	0.4057

TABLE 3-continued

$\frac{f_1}{f_2} =$	−0.0541
$\frac{d_3 + d_5 + d_7 + d_9}{f} =$	0.3982
$\frac{f_1}{f} =$	0.8149
$\frac{R_{21} - R_{22}}{R_{21} + R_{22}} =$	−0.1019

In this embodiment, the total length TL=3.0952 mm, and back focal length bf=0.92 mm. Thus, the imaging lens achieves effective aberration correction, minimum length and short back focal length.

The Second Embodiment

Refer FIG. **5-7**, Table 4 and Table 5, the symbols thereof are the same as those of the above first embodiment.

TABLE 4

Fno = 2.8 f = 2.7706 FOV = 63.8

Surface No.	R	d (mm)	Nd	νd
1 OBJ	∞	0		
2 R1*	0.8995	0.587	1.544	56.1
3 R2*	2.4942	0.449		
STOP				
4 R3*	−0.8224	0.371	1.614	26
5 R4*	−1.0242	0.371		
6 R5*	1.9439	0.506	1.531	56
7 R6*	1.3660	0.162		
8 IR	∞	0.300		
9		0.284		
10 IMAGE	∞			

*Aspheric

TABLE 5

	K	A4	A6	A8	A10	A12
R1*	−1.0513E+00	1.8715E−01	2.3592E−01	−1.8416E−01	5.4122E−01	−1.2992E−01
R2*	−5.0000E+01	6.3430E−01	−5.6962E+00	4.9428E+01	−2.2786E+02	3.9898E+02
R3*	−4.9817E−01	−5.1922E−01	−8.4273E−01	8.5060E+00	−3.9480E+01	5.1517E+01
R4*	−5.2615E−01	−3.1071E−01	2.7776E−01	1.6700E+00	−2.5672E+00	2.1435E+00
R5*	−1.0150E+01	−5.3093E−01	6.5799E−01	−4.2764E−01	1.4585E−01	−2.0321E+02
R6*	−1.2160E+01	−1.8390E−01	2.1213E−02	4.0902E−02	−2.9119E−02	5.4901E−03

In this embodiment, the first lens L**1** is made from plastic that has the refractive index N_{d1} of 1.54, and the Abbe's number v_{d1} of 56.1, the second lens L**2** is made from plastic that has the refractive index N_{d2} of 1.61 and the Abbe's number V_{d2} of 26, and the third lens L**3** is made from plastic that has the refractive index N_{d3} of 1.53 and the Abbe's number V_{d3} of 56 while the IR cut-off filter **4** is made from BSC7 glass.

The effective focal length f of the lens of this embodiment is 2.77706 mm while the focal length f_1 of the first lens L**1** is 2.2888 mm, the focal length f_2 of the second lens L**2** is −22.6801 mm, and the focal length f_3 of the third lens L**3** is −12.4237 mm. The inflection point on the image side **32** of the third lens L**3** is positioned at 1.52 mm. That means these parameters listing in Table 6 satisfy the equation (1) to equation (7):

TABLE 6

$\frac{bf}{TL} =$	0.3058
$\frac{\Delta}{f} =$	0.0042
$\frac{H_-}{H_r} =$	0.4343
$\frac{f_1}{f_2} =$	−0.1009
$\frac{d_3 + d_5 + d_7 + d_9}{f} =$	0.3987
$\frac{f_1}{f} =$	0.8261
$\frac{R_{21} - R_{22}}{R_{21} + R_{22}} =$	−0.1093

In this embodiment, the total length TL=3.0315 mm, and back focal length bf=0.93 mm. Thus, the imaging lens achieves effective aberration correction, minimum length and short back focal length.

The Third Embodiment

Refer to FIG. **8-10**, Table 7 and Table 8, the symbols thereof are the same as those of the first embodiment.

TABLE 7

Fno = 2.8 f = 2.8261 FOV = 61.3

Surface No.	R	d (mm)	Nd	νd
1 OBJ	∞	0		
2 R1*	1.0834	0.672	1.544	56.1
3 R2*	2.7382	0.545		

TABLE 7-continued

Fno = 2.8 f = 2.8261 FOV = 61.3

Surface No.	R	d (mm)	Nd	νd
STOP				
4 R3*	−1.0810	0.427	1.614	26
5 R4*	−1.2656	0.398		
6 R5*	1.4647	0.707	1.531	56
7 R6*	1.1946	0.223		
8 IR	∞	0.300		
9		0.269		
10 IMAGE	∞			

*Aspheric

TABLE 8

	K	A4	A6	A8	A10	A12
R1*	−1.4149E+00	1.5223E−01	2.8251E−01	−3.6080E−01	3.5946E−01	3.4720E−01
R2*	4.6434E−01	6.1406E−01	−6.9700E+00	5.6598E+01	−1.9326E+02	2.3541E+02
R3*	−1.3451E+00	−3.4721E−01	−8.5815E−02	9.3063E+00	−3.1774E+01	5.6748E+01
R4*	−5.4838E−01	−2.9738E−01	1.3360E−01	1.6725E+00	−2.3704E+00	2.1477E+00
R5*	−4.9655E+00	−5.2364E−01	6.5918E−01	−4.2795E−01	1.4580E−01	−1.9958E−02
R6*	−8.1455E+00	−1.6616E−01	2.8668E−02	4.2090E−02	−2.9240E−02	5.3579E−03

In this embodiment, the first lens L**1** is made from plastic that has the refractive index N_{d1} of 1.54, and the Abbe's number v_{d1} of 56.1, the second lens L**2** is made from plastic that has the refractive index N_{d2} of 1.61 and the Abbe's number v_{d2} of 26, and the third lens element L**3** is made from plastic that has the refractive index N_{d3} of 1.53 and the Abbe's number V_{d3} of 56 while the IR cut-off filter **4** is made from BSC7 glass.

The effective focal length f of the lens is 2.8261 mm while the focal length f_1 of the first lens L**1** is 2.8822 mm, the focal length f_2 of the second lens L**2** is −100.0013 mm, and the focal length f_3 of the third lens L**3** is −132.2025 mm. The inflection point on the image side **32** of the third lens L**3** is positioned at 1.86 mm. That means these parameters listing in Table 9 satisfy the equation (1) to equation (7):

TABLE 9

$\frac{bf}{TL} =$	0.2687
$\frac{\Delta}{f} =$	0.0040
$\frac{H_}{H_t} =$	0.5314
$\frac{f_1}{f} =$	−0.0288
$\frac{d_3 + d_5 + d_7 + d_9}{f} =$	0.4289

TABLE 9-continued

$\frac{f_1}{f} =$	1.0199
$\frac{R_{21} - R_{22}}{R_{21} + R_{22}} =$	−0.0786

In this embodiment, the total length TL=3.5413 mm, and back focal length bf=0.95 mm. Thus, the imaging lens achieves effective aberration correction, minimum length and short back focal length.

The Fourth Embodiment

Refer FIG. **11-13**, Table 5 and Table 6, the symbols thereof are the same as those of the first embodiment.

TABLE 10

Fno = 2.8 f = 2.6249 FOV = 66.4

Surface No.	R	d (mm)	Nd	vd
1 OBJ	∞	0		
2 R1*	1.0151	0.531	1.589	61.2
3 R2*	3.4521	0.555		
STOP				
4 R3*	−0.6006	0.384	1.689	31.1
5 R4*	−0.7644	0.100		
6 R5*	2.8451	0.800	1.589	61.2
7 R6*	2.3319	0.383		
8 IR	∞	0.540		
9		0.151		
10 IMAGE	∞			

*Aspheric

TABLE 11

	K	A4	A6	A8	A10	A12
R1*	−3.1111E+00	3.9484E−01	−3.8842E−01	1.2487E+00	−2.5172E+00	1.5563E+00
R2*	−1.9839E−01	4.6320E−01	−4.5520E−01	1.1664E+00	−9.8354E+00	2.6990E+01
R3*	−1.0188E+00	−1.6478E−01	−6.4700E+00	5.0365E+01	−1.4785E+02	1.3369E+02
R4*	−1.7184E−01	−3.3391E−01	−6.7031E−01	4.8137E+00	−4.0131E+00	−6.8849E−01
R5*	−4.8830E+00	−1.9604E−01	4.1212E−01	−3.3710E−01	1.3391E−01	−2.1215E−02
R6*	−3.5287E+00	−7.1667E−01	−7.9030E−02	9.9393E−02	−3.9391E−02	5.4067E−03

In this embodiment, the first lens L**1** is made from glass that has the refractive index N_{d1} of 1.59, and the Abbe's number v_{d1} of 61.2, the second lens L**2** is made from glass that has the refractive index N_{d2} of 1.69 and the Abbe's number v_{d2} of 31.1, and the third lens L**3** is made from glass that has the refractive index N_{d3} of 1.59 and the Abbe's number v_{d3} of 61.2 while the IR cut-off filter **4** is made from BSC7 glass.

The effective focal length f of the lens is 2.6249 mm while the focal length f_1 of the first lens L**1** is 2.2536 mm, the focal length f_2 of the second lens L**2** is −95.1835 mm, and the focal length f_3 of the third lens L**3** is −51.9728 mm. The inflection point on the image side **32** of the third lens L**3** is positioned at

1.48 mm. That means these parameters listing in Table 12 satisfy the equation (1) to equation (7):

TABLE 12

$\frac{bf}{TL} =$	0.3118
$\frac{\Delta}{f} =$	0.0026
$\frac{H}{H_t} =$	0.4229
$\frac{f_1}{f_2} =$	−0.0237
$\frac{d_3 + d_5 + d_7 + d_9}{f} =$	0.3068
$\frac{f_1}{f} =$	0.8585
$\frac{R_{21} - R_{22}}{R_{21} + R_{22}} =$	−0.1200

In this embodiment, the total length TL=3.4426 mm, and back focal length bf=1.07 mm. Thus, the imaging lens achieves effective aberration correction, minimum length and short back focal length.

The total length of the imaging lens in this embodiment is 4.83 mm.

Additional advantages and modifications will readily occur to those skilled in the art. Therefore, the invention in its broader aspects is not limited to the specific details, and representative devices shown and described herein. Accordingly, various modifications may be made without departing from the spirit or scope of the general inventive concept as defined by the appended claims and their equivalents.

What is claimed is:

1. A miniature three-piece optical imaging lens with short back focal length, along an optical axis thereof from an object side to an image side, comprising:

a first lens with positive refractive power that is a meniscus aspherical lens having a convex surface on the object side;

an aperture stop;

a second lens with negative refractive power that is a meniscus aspherical lens having a convex surface on the image side; and

a third lens with negative refractive power on the optical axis that is an aspherical lens whose center is on the optical axis, while on the lens center the convex surface is on the object side and the concave surface is on the image side; from the center of the third lens toward the edge thereof, the refractive power changes from negative power, through an inflection point, to positive power; wherein the optical imaging lens satisfies conditions of:

$$0.25 \le \frac{bf}{TL} \le 0.4$$

-continued

$$0.001 \le \frac{\Delta}{f} \le 0.006$$

$$0.38 \le \frac{H}{H_t} \le 0.7$$

$$-0.12 \le \frac{f_1}{f_2} \le -0.01;$$

wherein f is effective focal length of the optical imaging lens, bf is back focal length, TL is total distance on the optical axis from the object side of the first lens to an image plane of an image sensor, Δ is the absolute value of longitudinal chromatic aberrations at Fraunhofer F curve and C curve wavelengths, H is perpendicular distance from the inflection point on the image side of the third lens to its intersection point of the optical axis, H_t is perpendicular distance from the maximum optical effective point on the image side of the third lens to the optical axis, f_1 is effective focal length of the first lens, f_2 is effective focal length of the second lens.

2. The optical imaging lens as claimed in claim **1**, wherein the effective focal length of the first lens and the distance on the optical axis between every two lens further satisfies conditions of:

$$0.25 \le \frac{d_3 + d_5 + d_7 + d_9}{f} \le 0.5$$

$$0.7 \le \frac{f_1}{f} \le 1.2$$

wherein f is effective focal length of the optical imaging lens, f_1 is effective focal length of the first lens, d_3 is distance on the optical axis from the image side of the first lens to the object side of the second lens, d_5 is distance on the optical axis from the image side of the second lens to the object side of the third lens, d_7 is distance on the optical axis from the image side of the third lens to the object side of an IR cut-off filter, d_9 is distance on the optical axis from the image side of an IR cut-off filter to the image plane of the image sensor.

3. The optical imaging lens as claimed in claim **1**, wherein the second lens further satisfies an condition of:

$$-0.2 \le \frac{R_{21} - R_{22}}{R_{21} + R_{22}} \le -0.06$$

wherein R_{21} is radius of curvature of the object side of the second lens and R_{22} is radius of curvature of the image side of the second lens.

4. The optical imaging lens as claimed in claim **1**, wherein the first lens, the second lens and the third lens are made from plastic.

5. The optical imaging lens as claimed in claim **1**, wherein the second lens is made from glass.

6. The optical imaging lens as claimed in claim **1**, wherein the first lens element and the third lens are made from glass.

* * * * *