US 20080189901A1

(19) United States

(12) Patent Application Publication

Jansen

(10) Pub. No.: US 2008/0189901 A1

(43) Pub. Date: Aug. 14, 2008

(54) **BARE FLOOR CLEANER**

(75) Inventor: **John L. Jansen**, Hong Kong (CN)

Correspondence Address:
MCGARRY BAIR PC
32 Market Ave. SW, SUITE 500
GRAND RAPIDS, MI 49503 (US)

(73) Assignee: **BISSELL HOMECARE, INC.**, Grand Rapids, MI (US)

(21) Appl. No.: **10/595,113**

(22) PCT Filed: **Aug. 20, 2004**

(86) PCT No.: **PCT/US04/26952**

§ 371 (c)(1), (2), (4) Date: **Feb. 21, 2006**

Related U.S. Application Data

(60) Provisional application No. 60/481,277, filed on Aug. 22, 2003, provisional application No. 60/521,253, filed on Mar. 19, 2004.

Publication Classification

(51) **Int. Cl.**

A47L 7/00	(2006.01)
A47L 5/30	(2006.01)
A47L 9/04	(2006.01)

(52) **U.S. Cl.** **15/320**; 15/331

(57) **ABSTRACT**

A bare floor cleaner for wet and dry bare floor surfaces comprises a base with wet and dry suction nozzles and a handle pivotally connected to the base. A diverter mounted in the working air conduit between each of the dry suction nozzle and the wet suction nozzle to a recovery tank is movable by movement of the handle between a dry suction position and a wet suction position for selectively at least partially blocking working air flow from the wet suction nozzle and the dry suction nozzle, respectively, to the recovery tank.

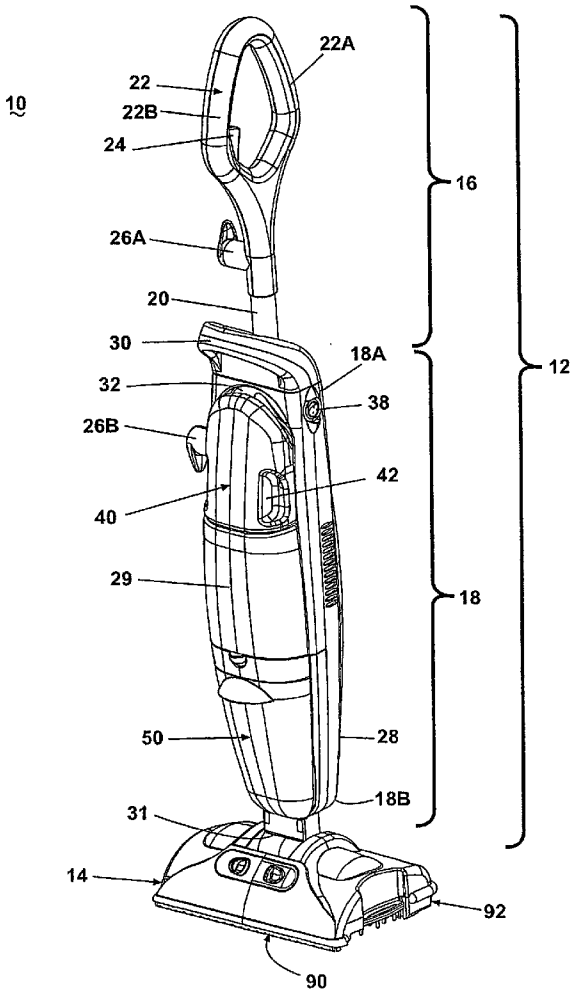

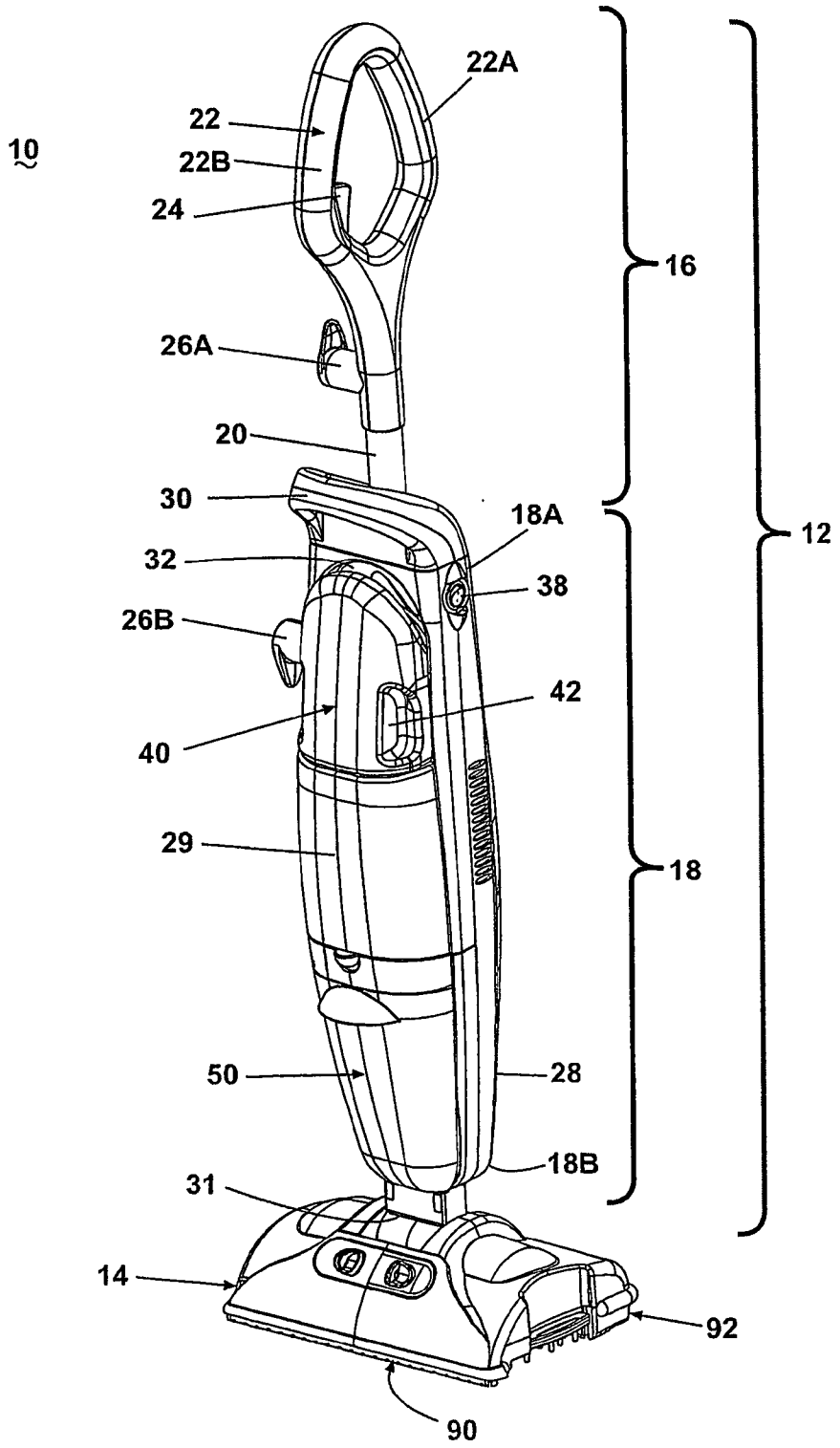
10
22A
22
22B
24
16
26A
20
30
18A
12
32
38
26B
42
40
29
18
50
28
18B
31
14
92
90

Fig. 1A

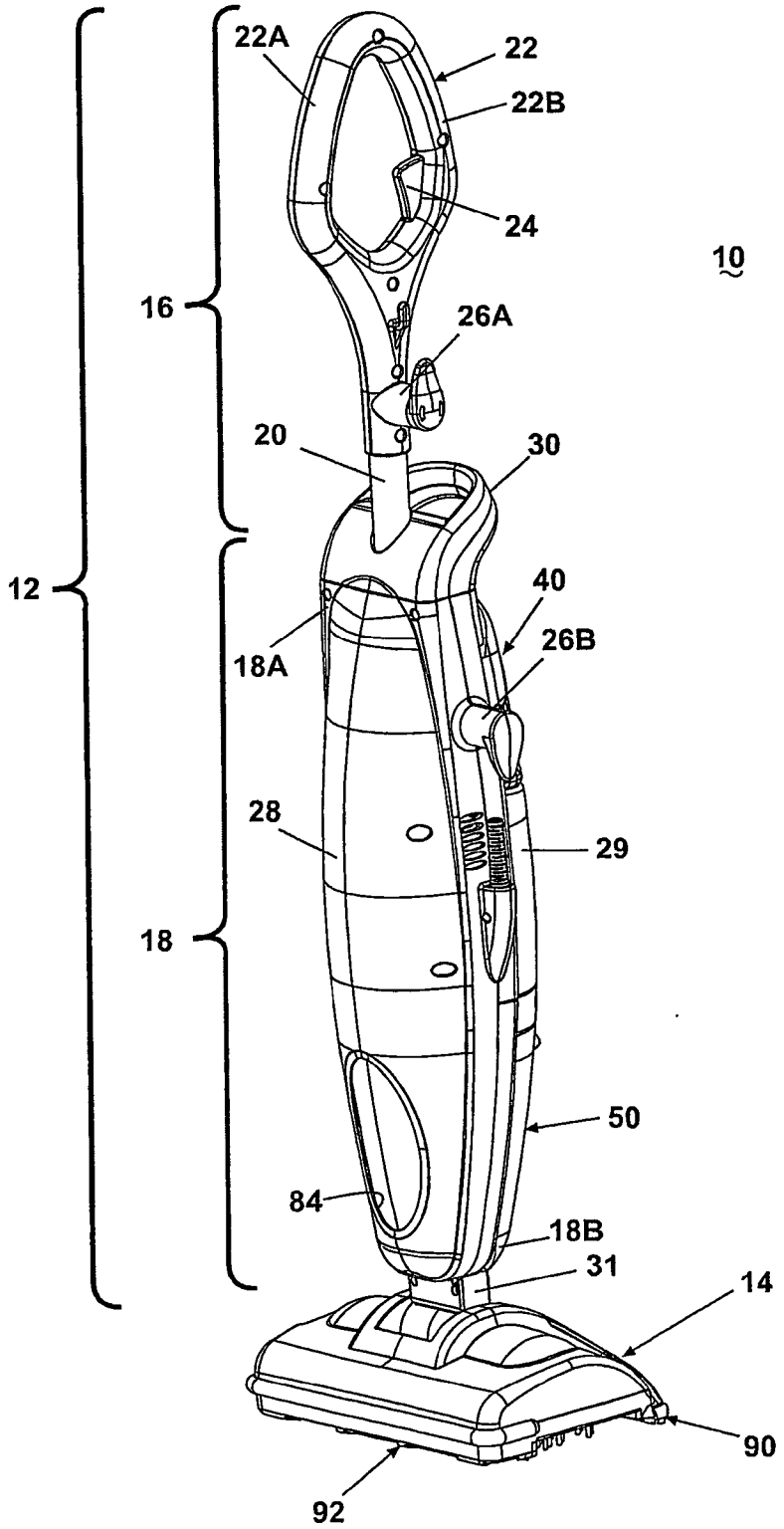
22A
22
22B
24
10
16
26A
20
30
12
40
26B
18A
28
29
18
50
84
18B
31
14
90
92

Fig. 1B

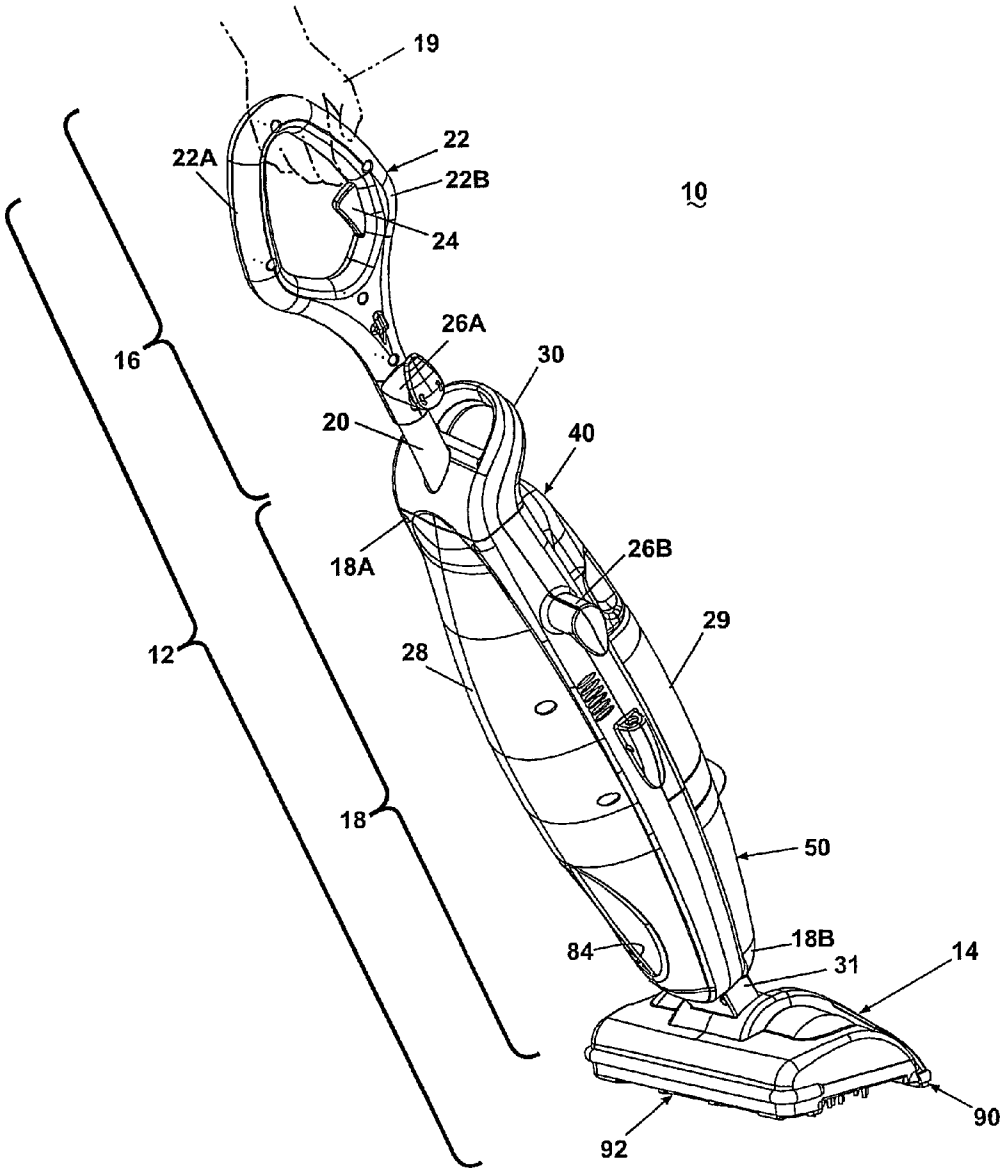
19
22
22A
22B
10
24
26A
16
30
20
40
18A
26B
29
12
28
18
50
84
18B
31
14
90
92

Fig. 2A

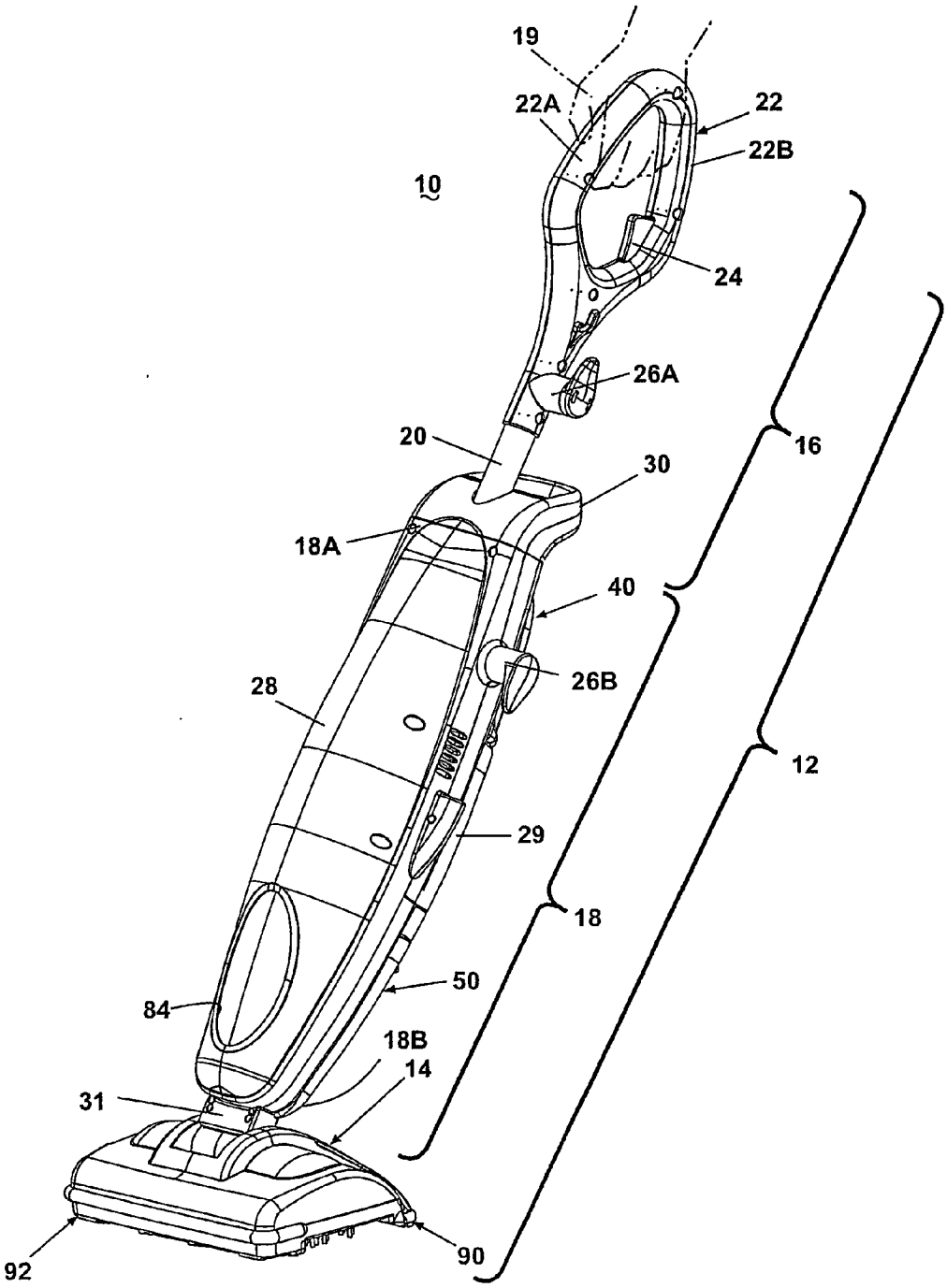
19
22A
22
22B
10
24
26A
20
30
16
18A
40
26B
28
12
29
18
50
84
18B
14
31
92
90

Fig. 2B

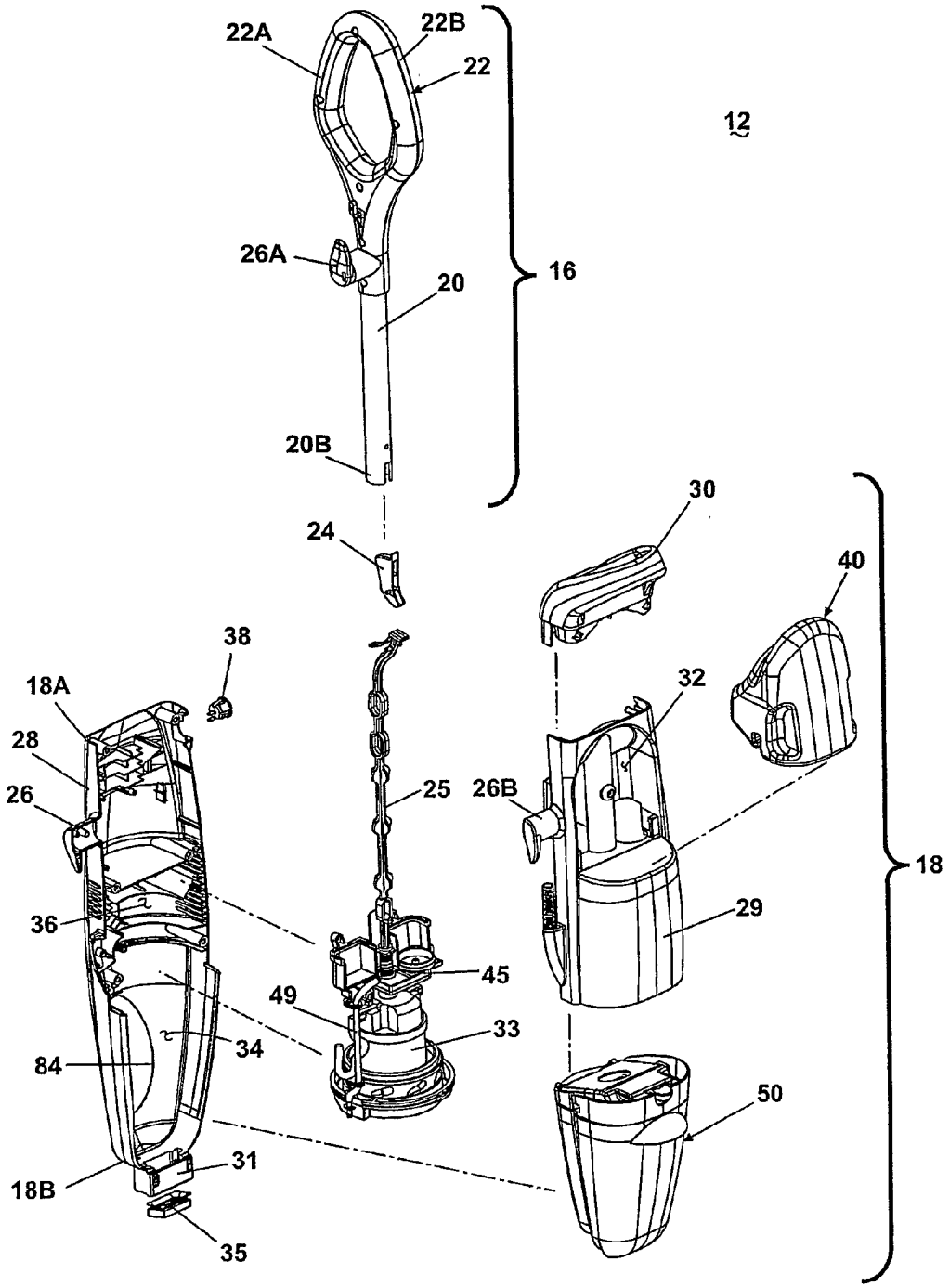
22A
22B
22
12
26A
20
16
20B
30
24
40
38
18A
32
28
26
25
26B
18
36
29
45
49
33
34
84
50
31
18B
35

Fig. 3

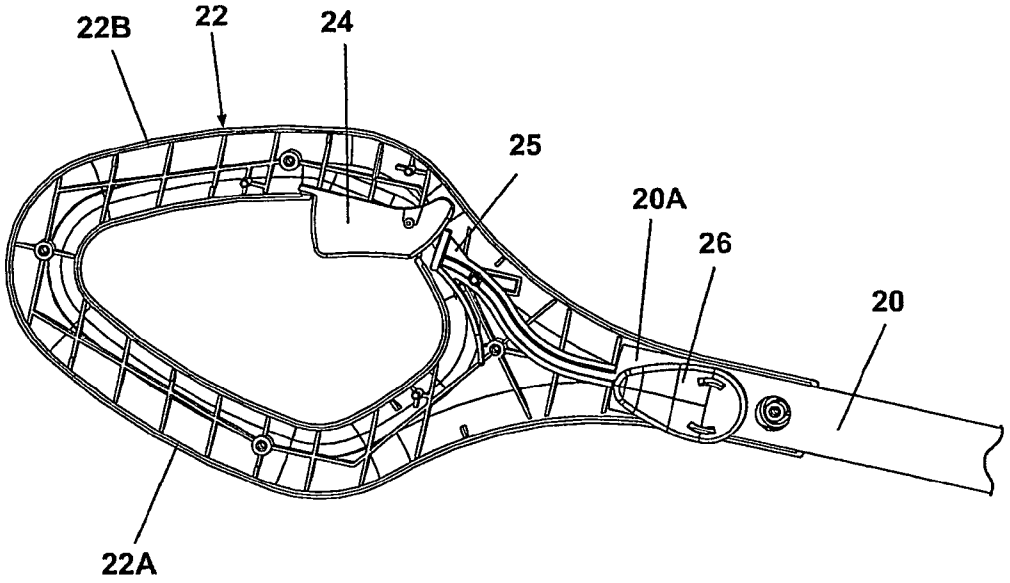

Fig. 4

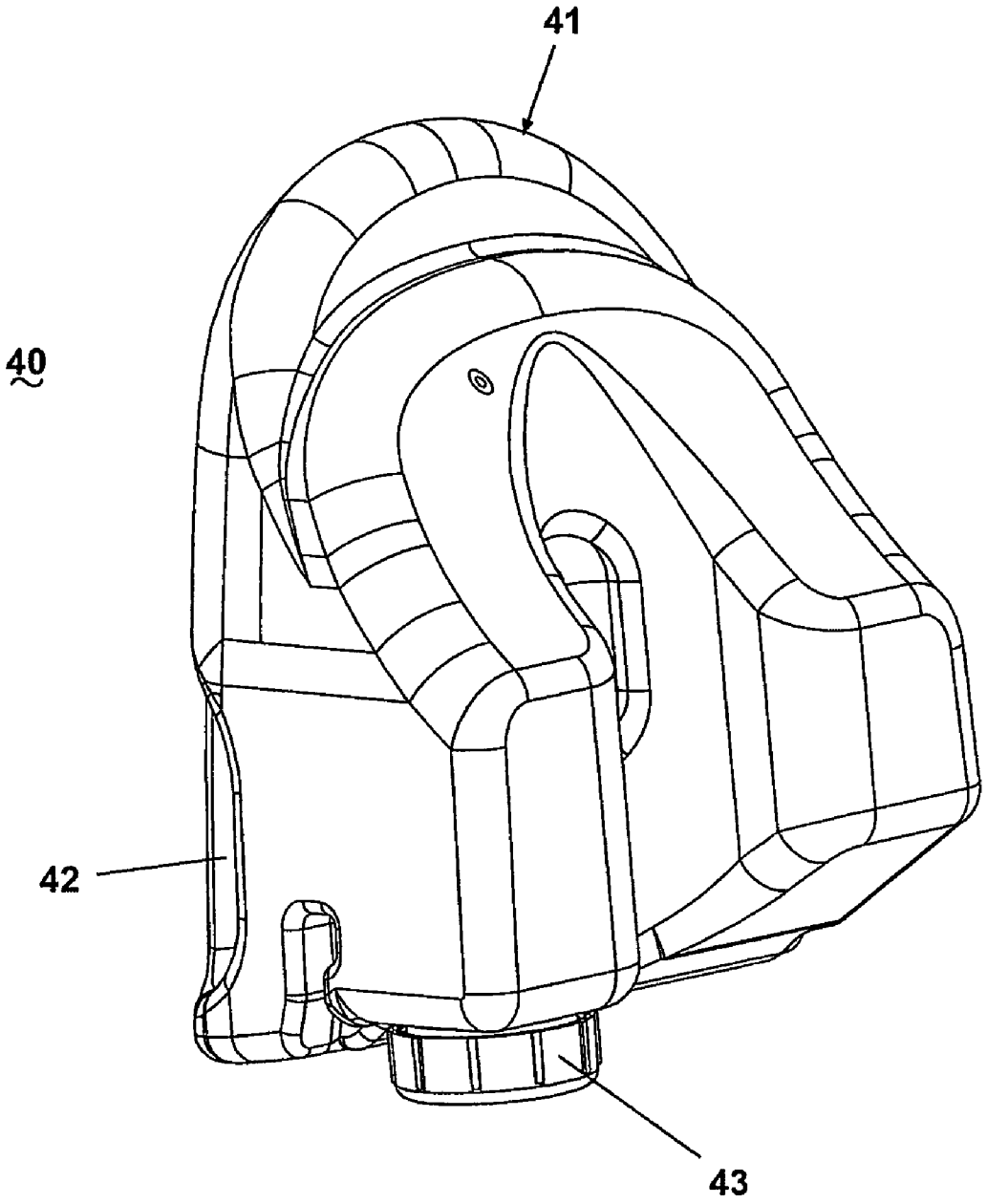

Fig. 5

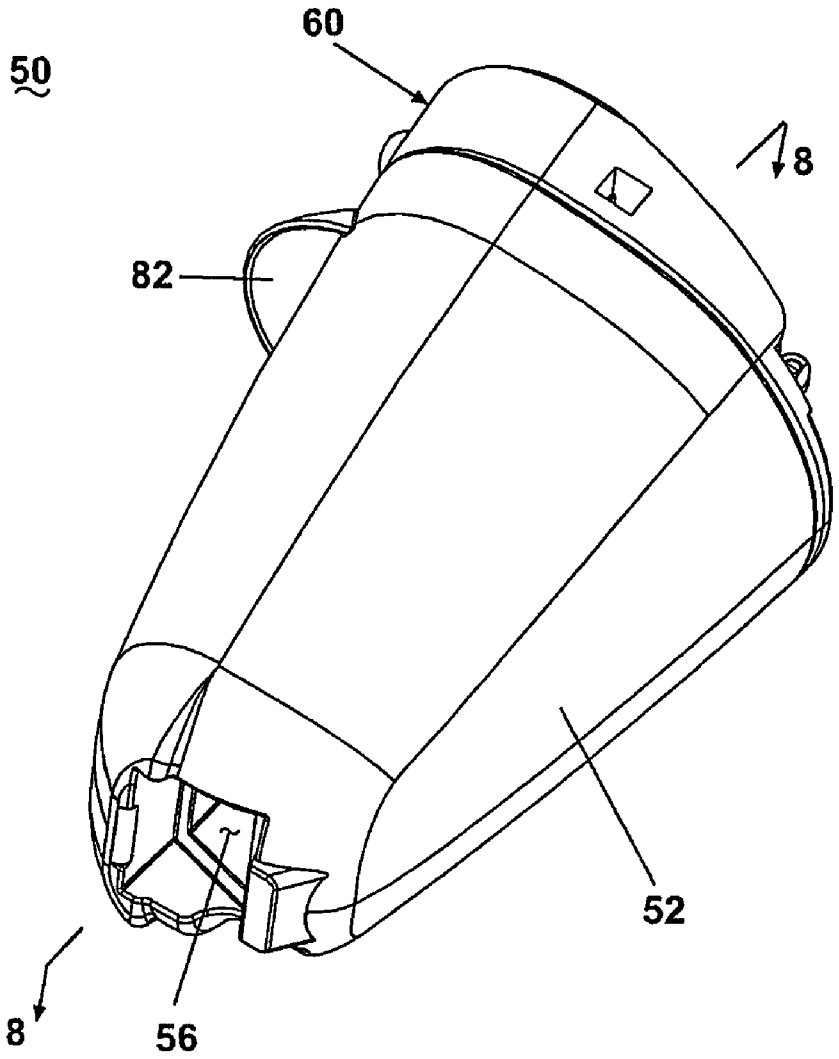

Fig. 6

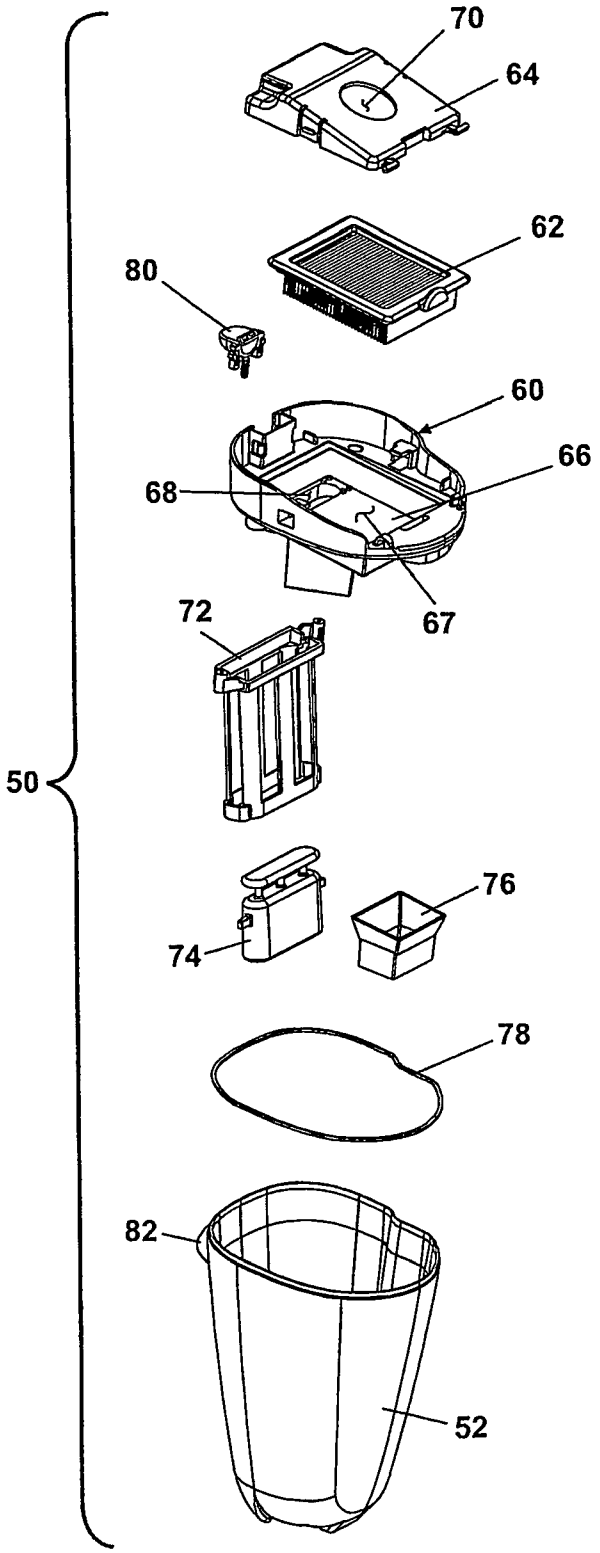

Fig. 7

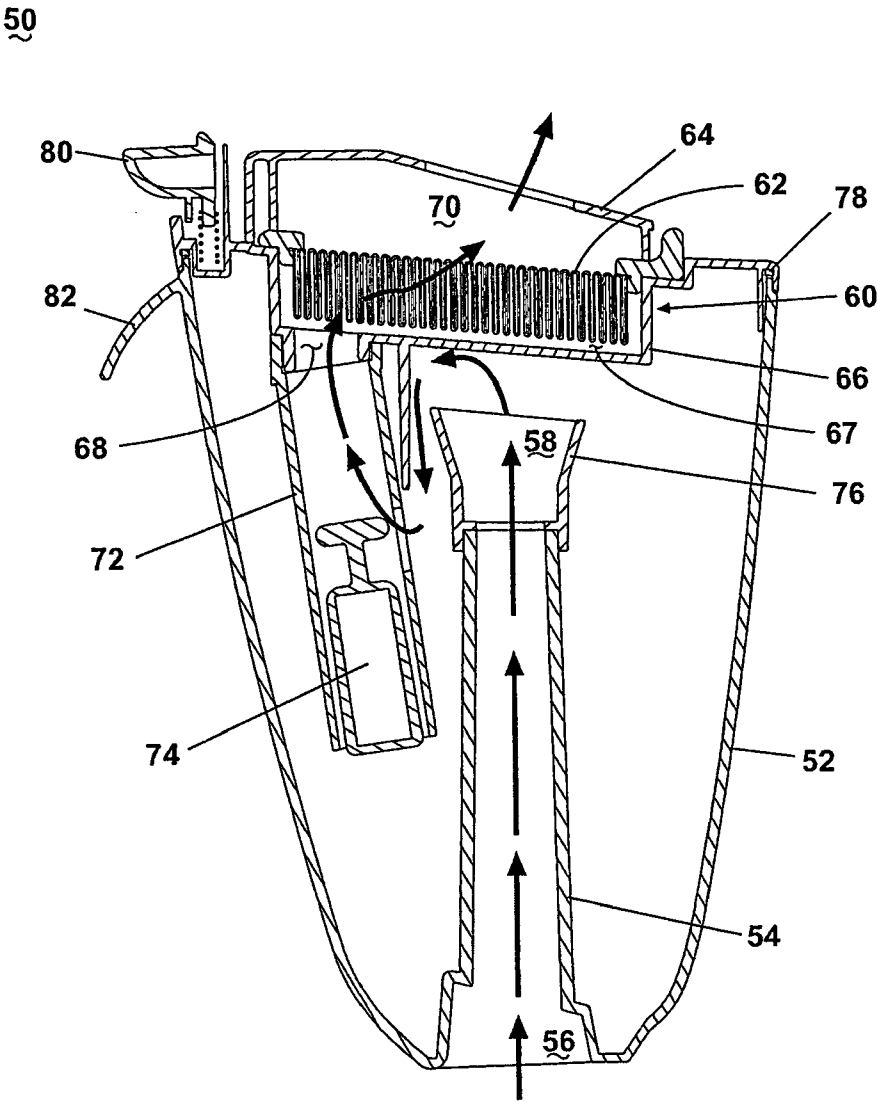

Fig. 8

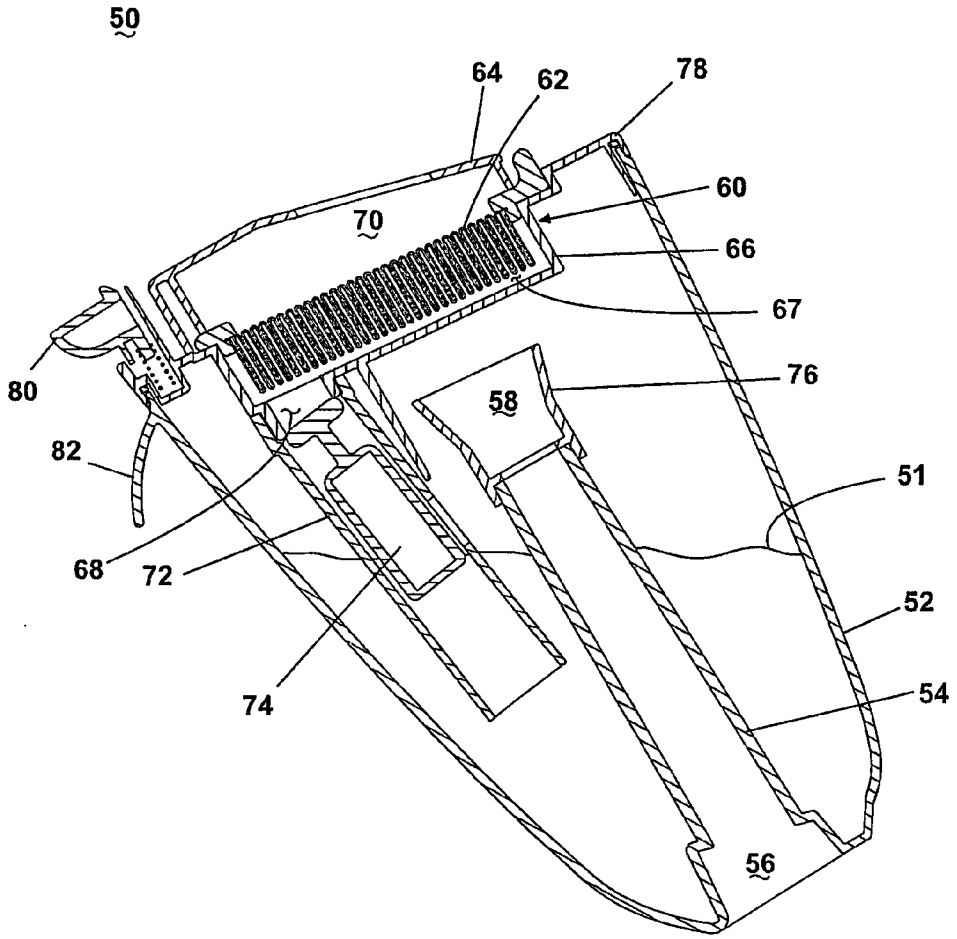

Fig. 8A

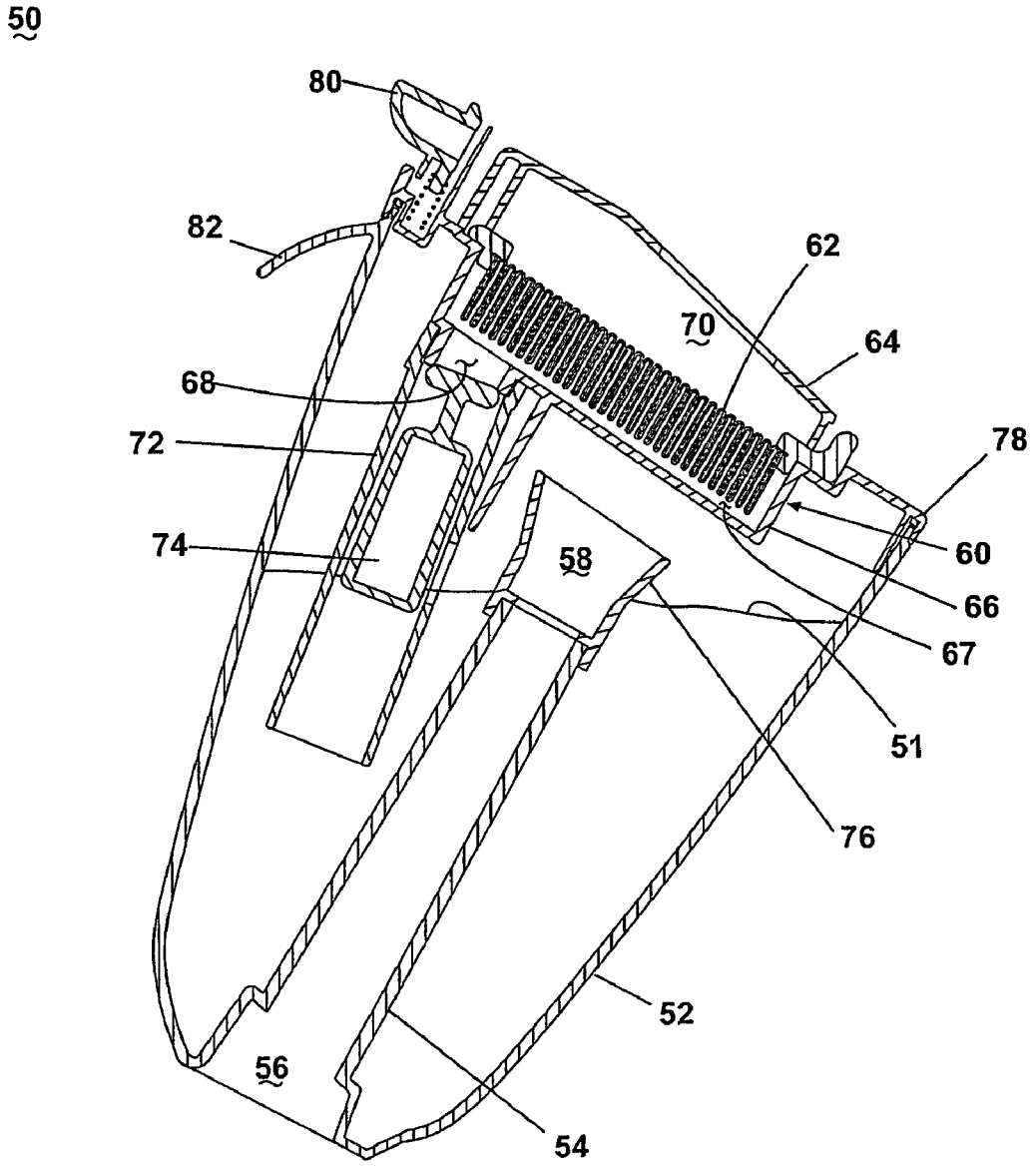

Fig. 8B

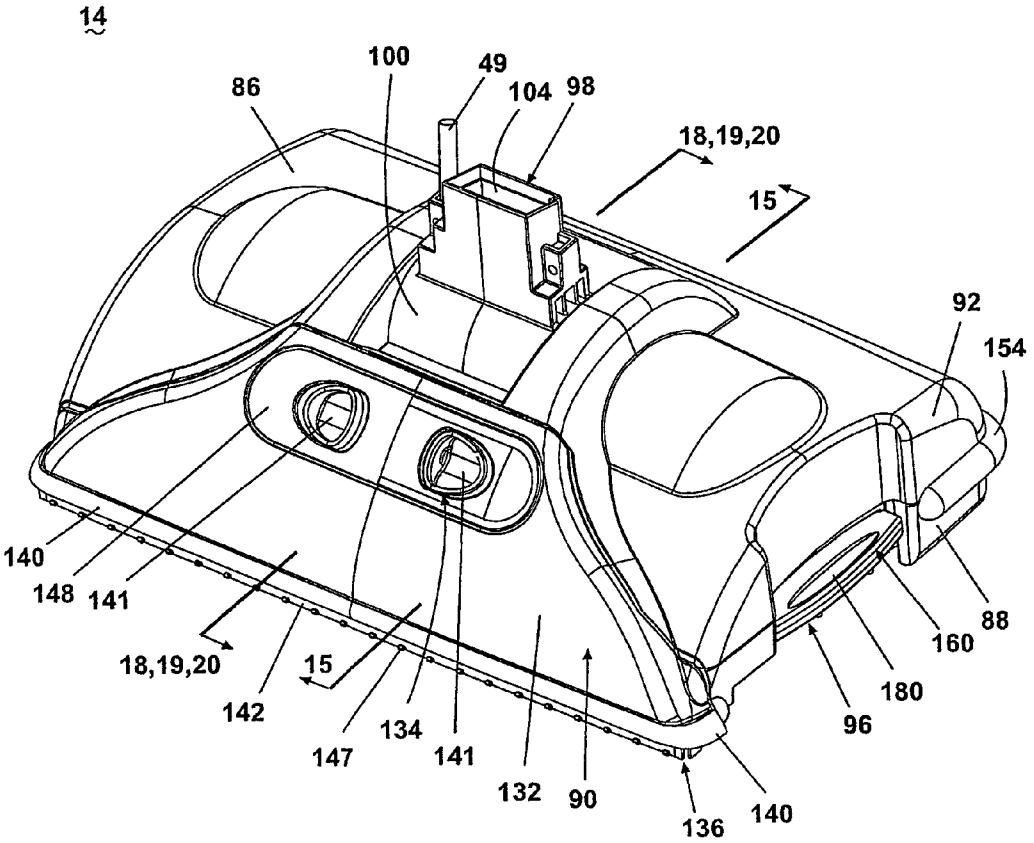
14
100
49
86
104
98
18,19,20
15
92
154
140
148
141
18,19,20
15
142
147
134
141
132
90
136
140
96
180
160
88

Fig. 9

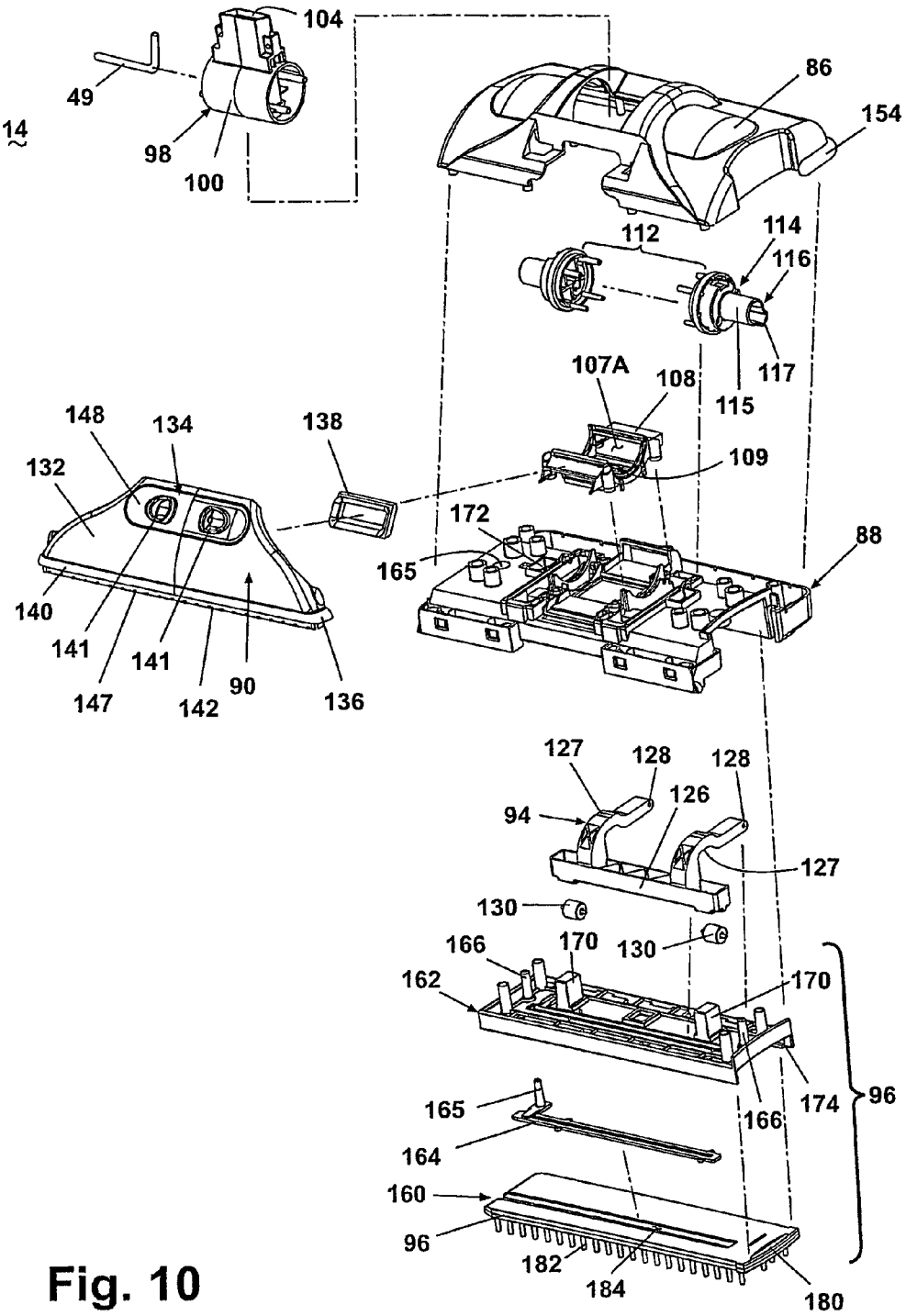
104
49
14
98
100
86
154
112
114
116
117
115
107A
108
109
148
134
138
132
172
165
88
140
141
141
147
142
90
136
127
128
128
126
94
127
130
130
166
170
162
170
174
96
166
165
164
160
96
182
184
180

Fig. 10

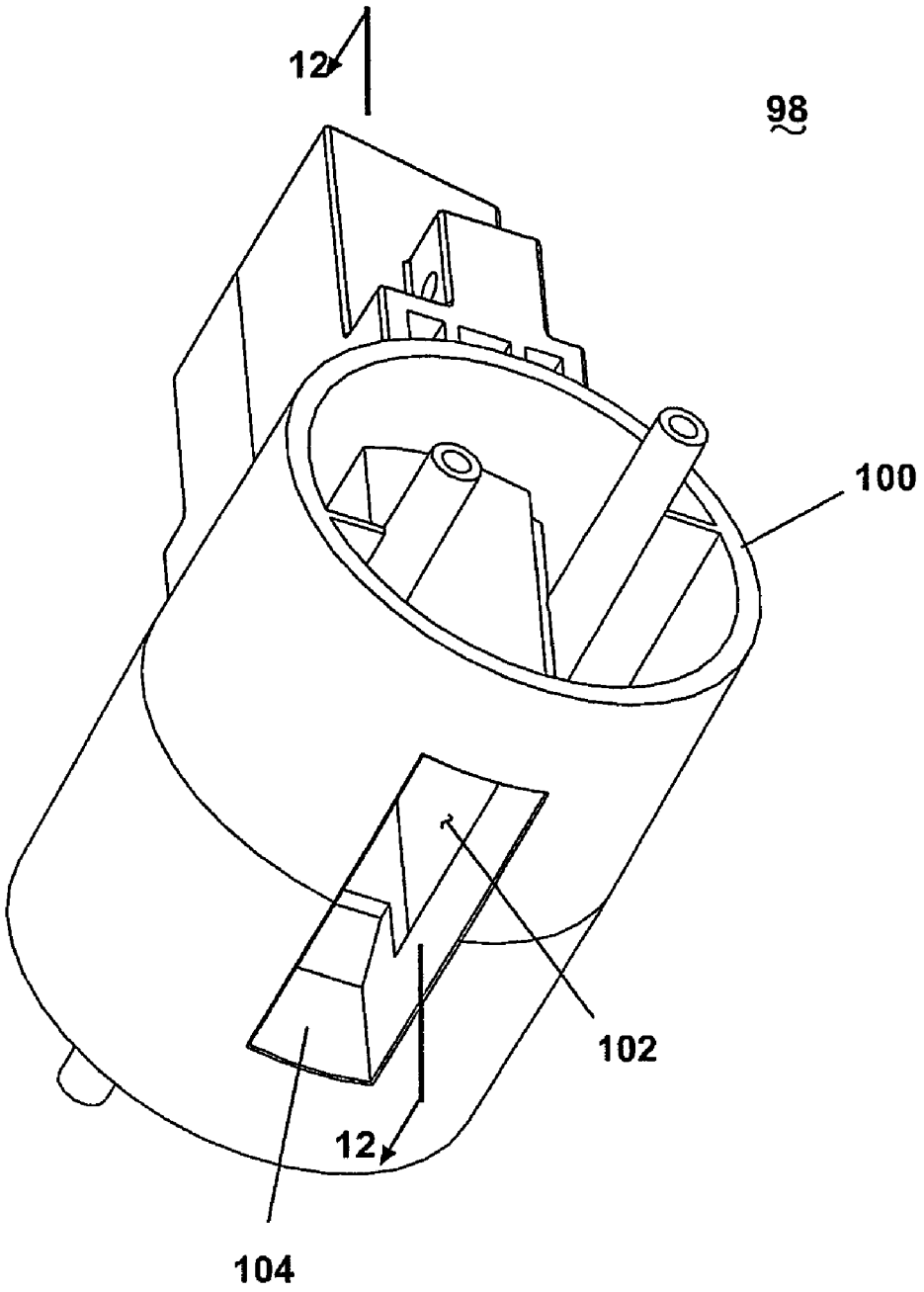

Fig. 11

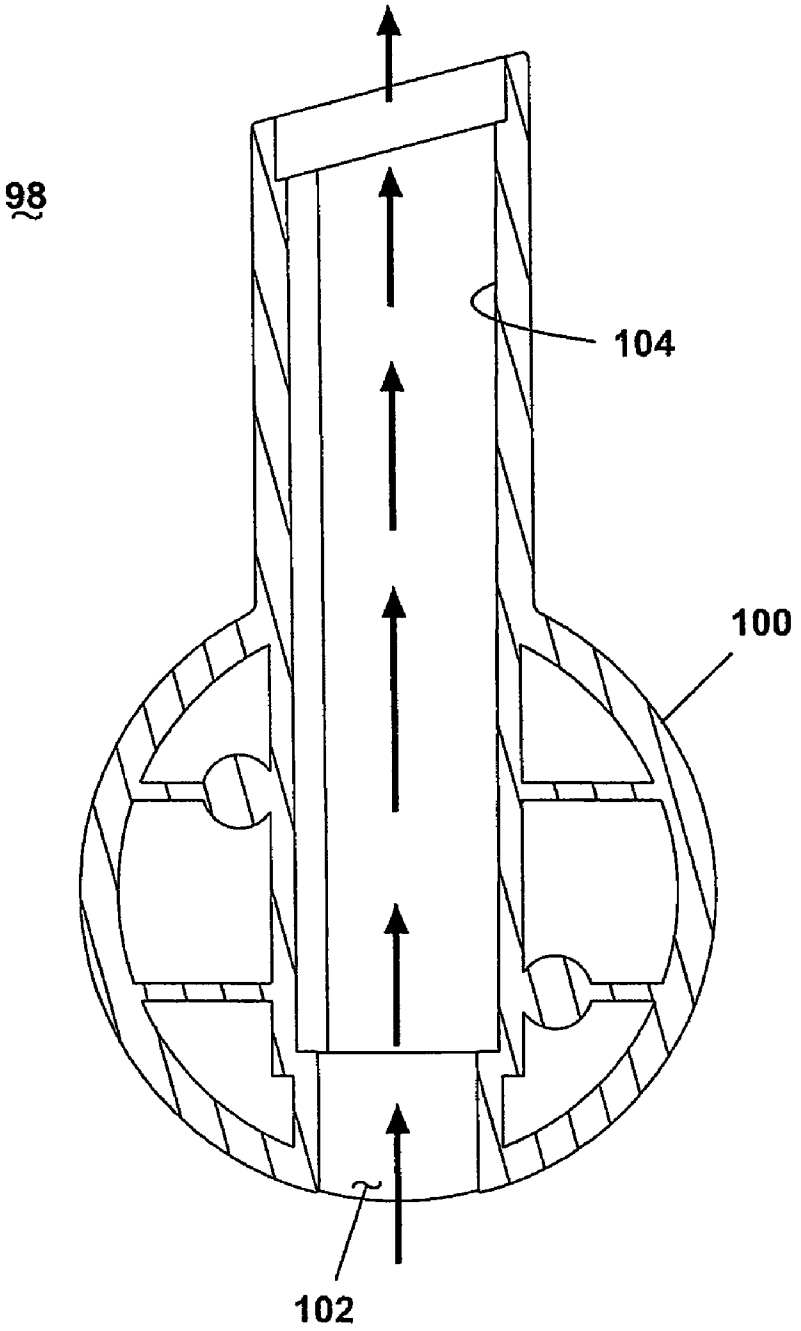

Fig. 12

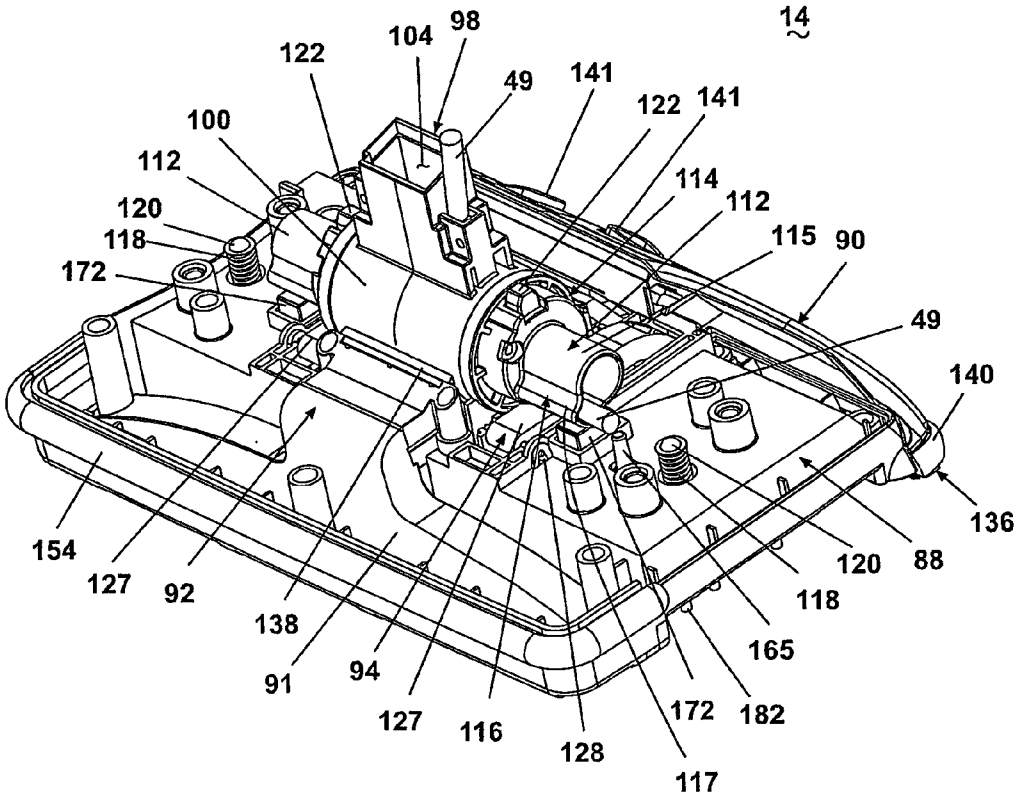
14
98
104
122
49
141
122
141
100
112
114
112
120
118
115
90
172
49
140
136
154
127
92
138
91
94
127
116
128
117
172
182
165
118
120
88

Fig. 13

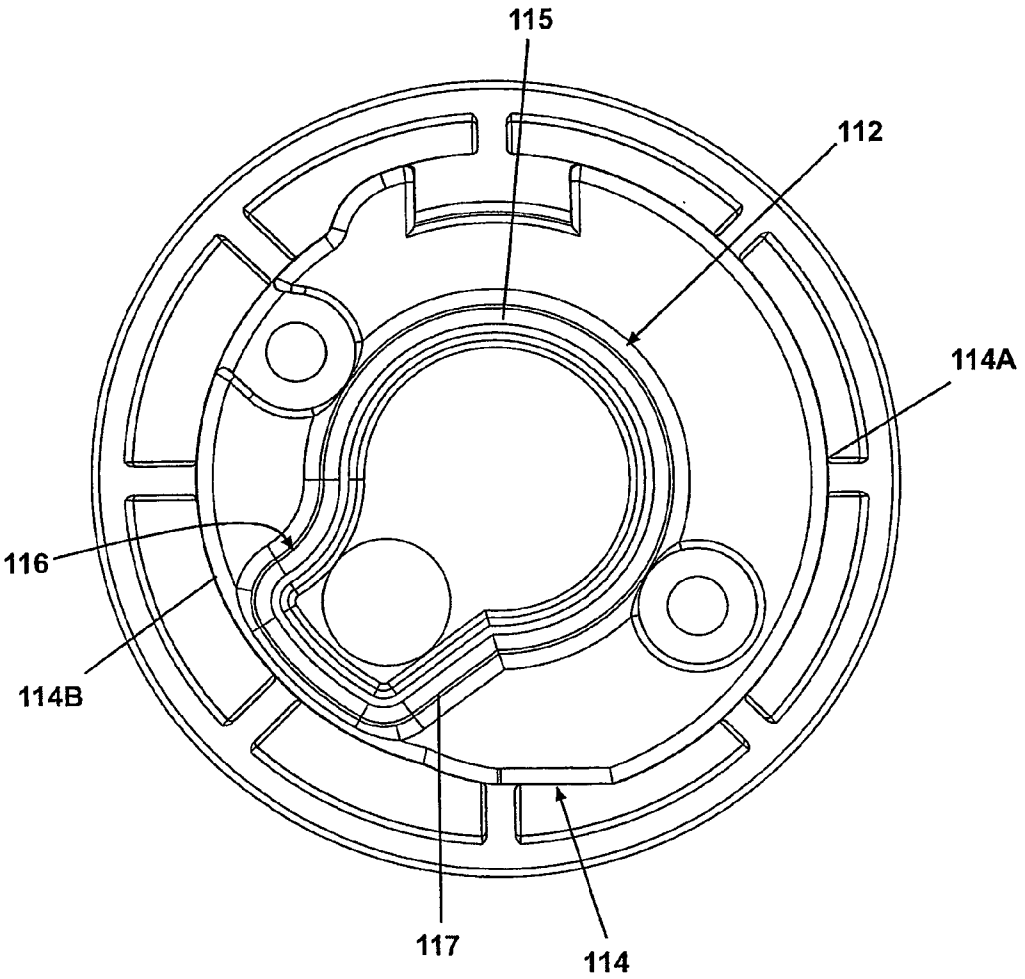

Fig. 14

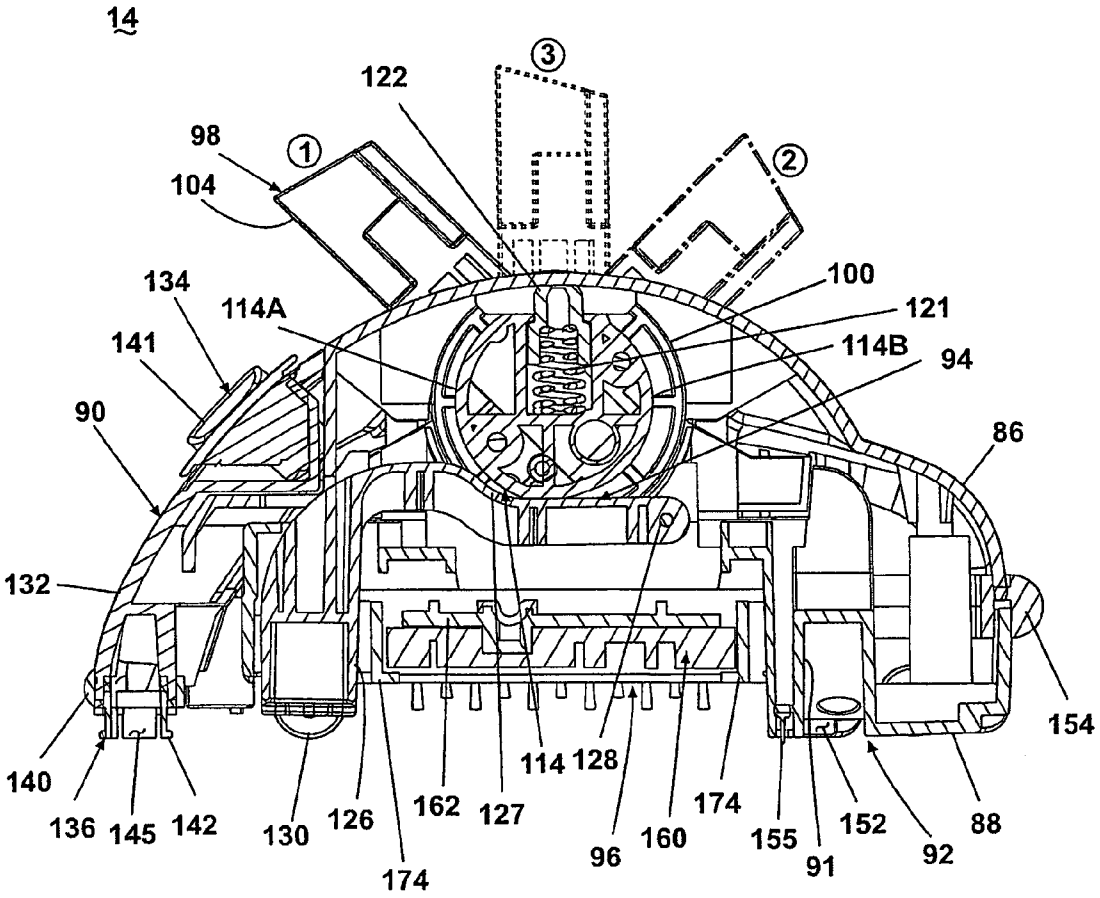
14
122
3
98
1
2
104
100
134
114A
121
141
114B
94
90
86
132
154
140
136
145
142
130
126
174
162
127
114
128
96
160
174
155
91
152
92
88

Fig. 15

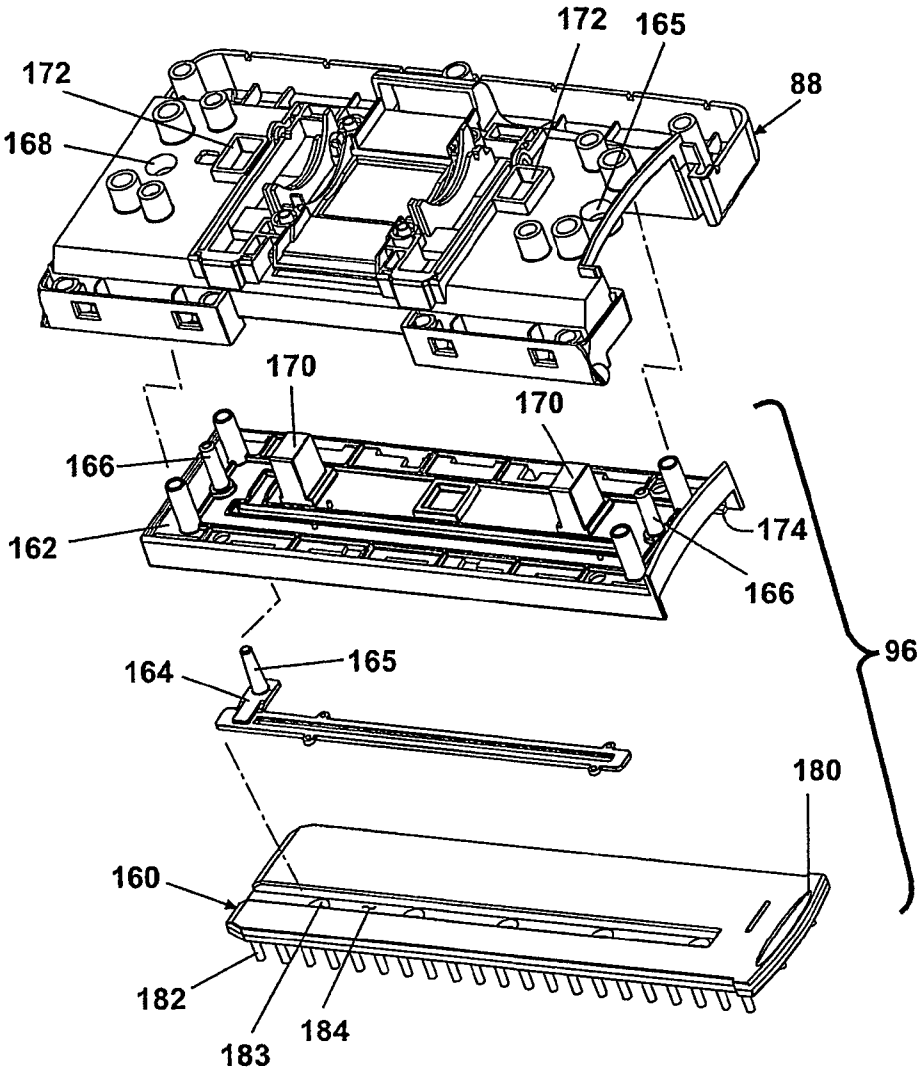
172
165
172
88
168
170
170
166
174
162
166
96
164
165
180
160
182
184
183

Fig. 16

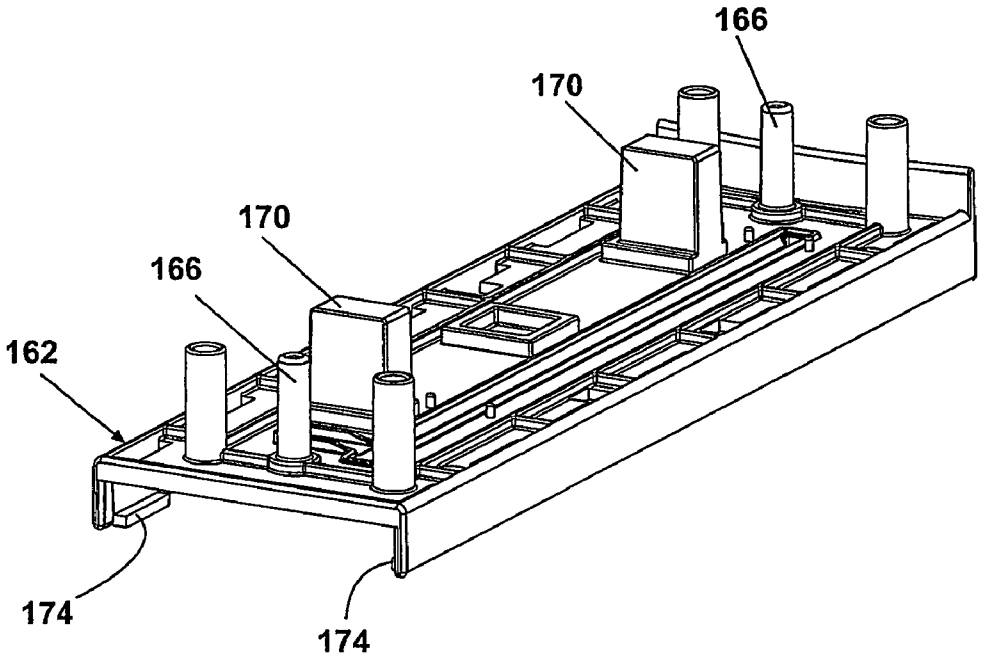

Fig. 16A

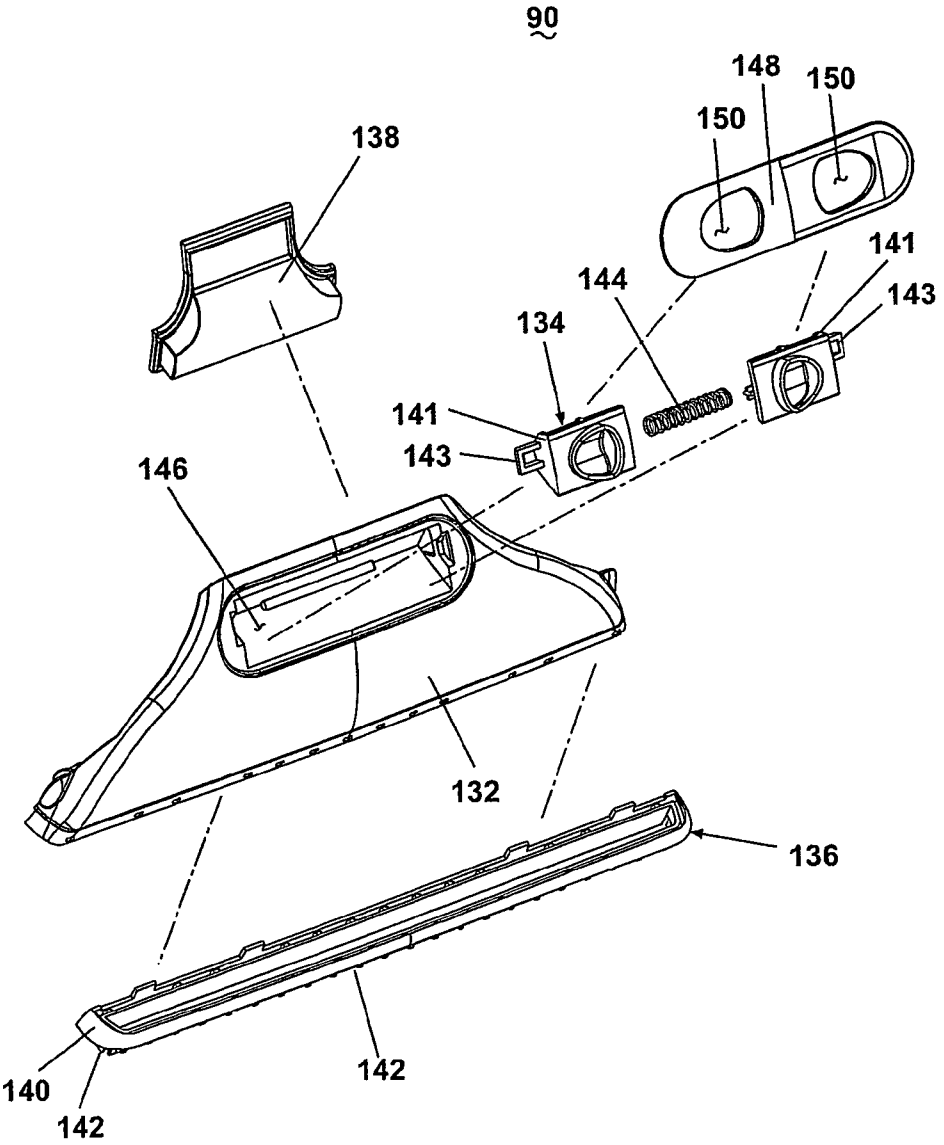
90
148
150
150
138
141
144
143
134
141
143
146
132
136
140
142
142

Fig. 17

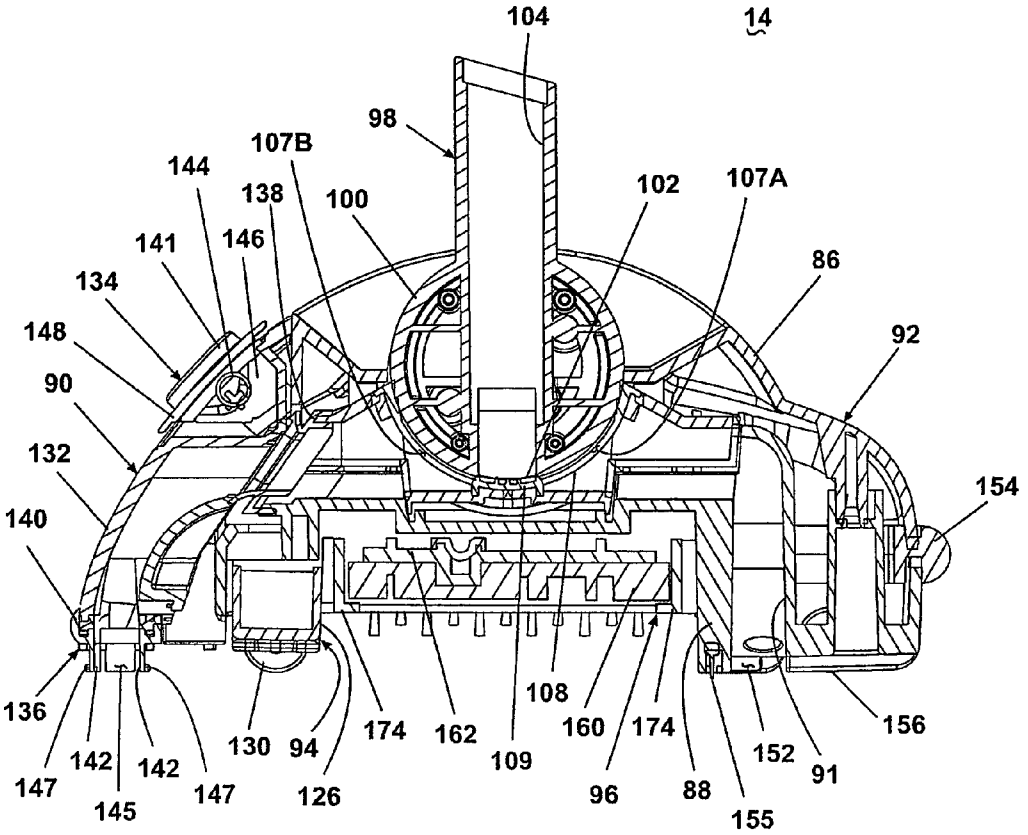
104
14
98
107B
144
138
100
102
107A
141
146
86
134
148
92
90
132
154
140
136
147
142
145
142
147
130
94
126
174
162
109
108
160
174
96
88
155
152
91
156

Fig. 18

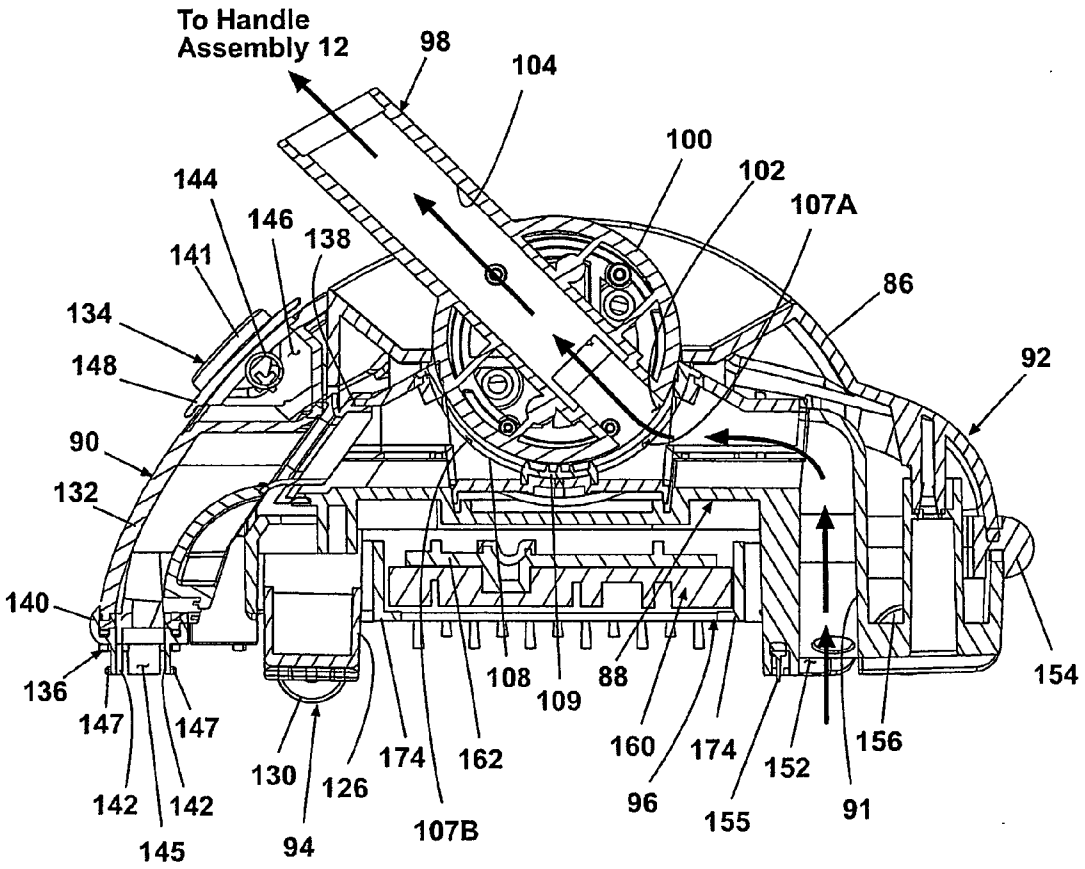
To Handle
Assembly 12
98
104
100
102
107A
86
92
144
146
138
141
134
148
90
132
140
136
147
147
142
142
145
130
94
126
174
107B
162
108
109
88
160
96
174
155
152
91
156
154

Fig. 19

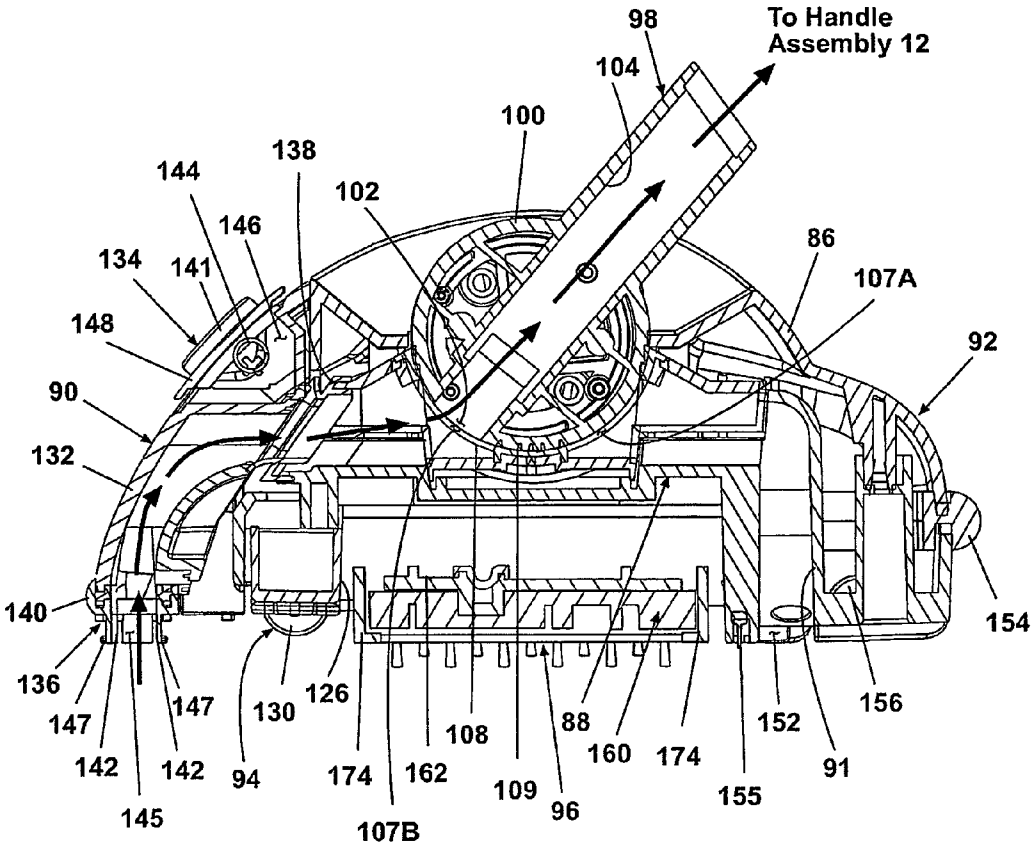
98
To Handle
Assembly 12
104
100
138
144
102
146
86
134
141
107A
148
92
90
132
140
154
136
147
147
130
126
88
152
156
142
142
94
174
162
108
109
160
174
91
145
107B
96
155

Fig. 20

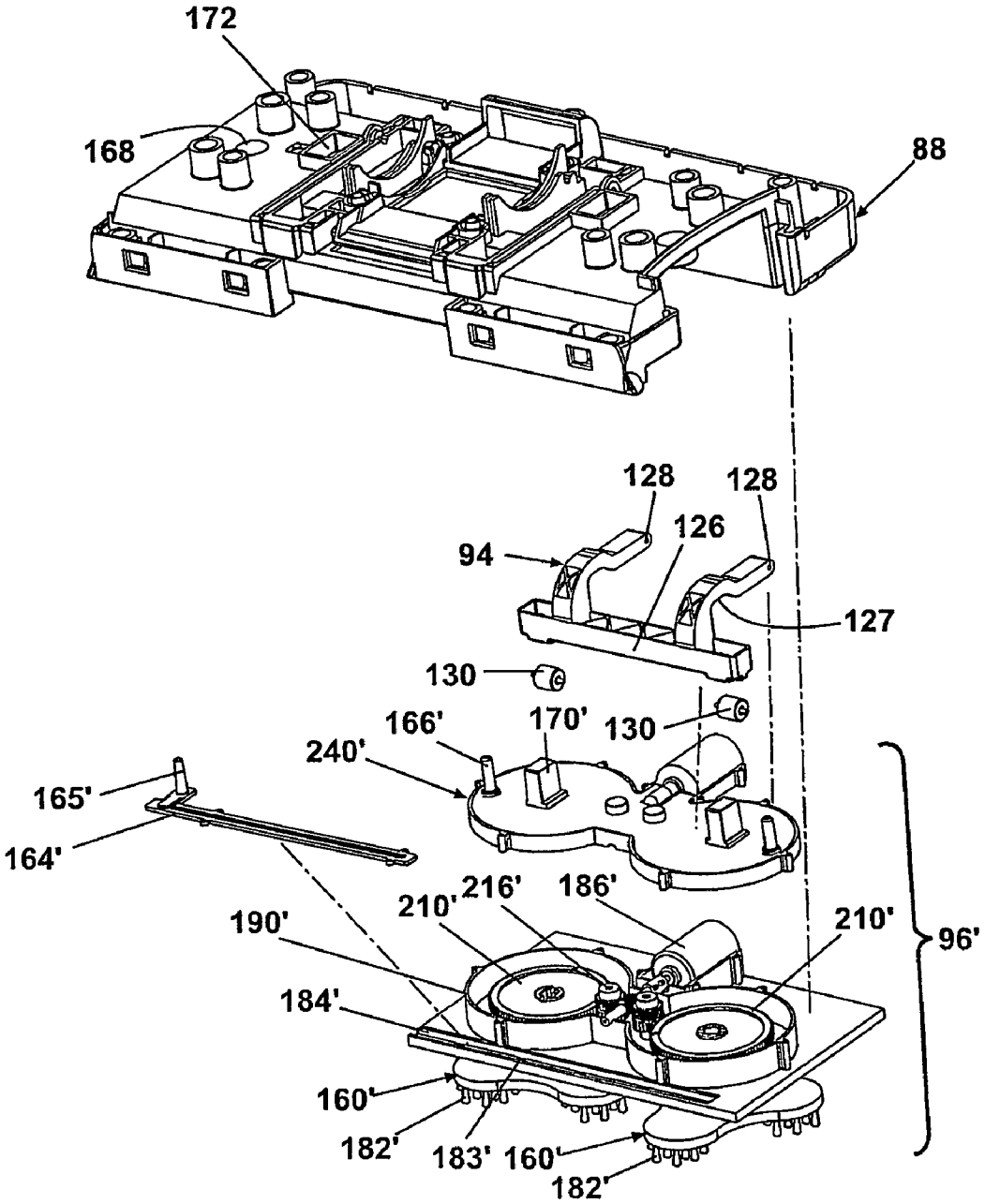
172
168
88
128
128
126
94
127
130
166'
170'
130
240'
165'
164'
216'
186'
210'
210'
190'
96'
184'
160'
182'
183'
160'
182'

Fig. 21

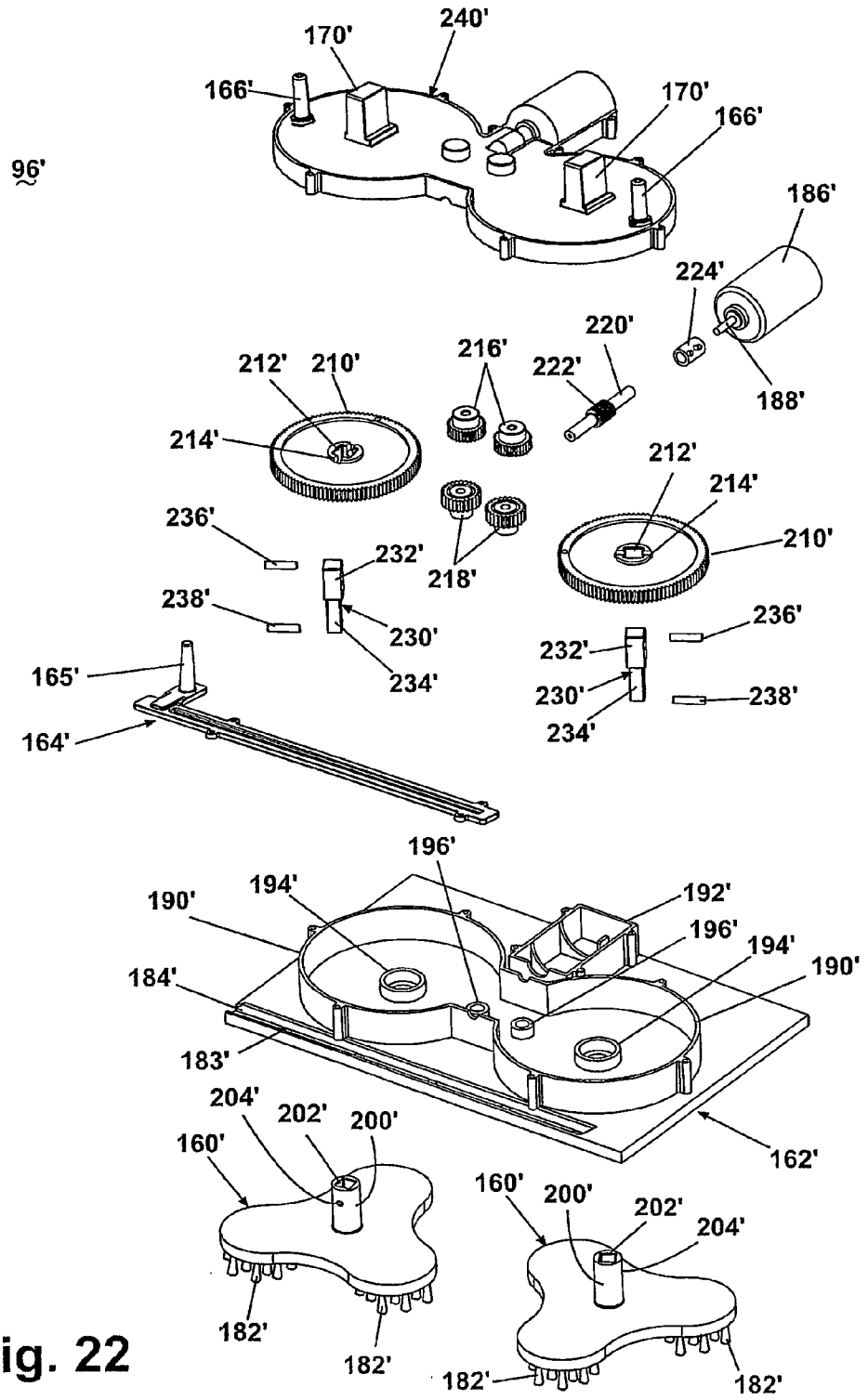
96'
170'
240'
166'
170'
166'
186'
224'
220'
216'
222'
188'
212'
210'
214'
212'
214'
210'
236'
232'
218'
238'
230'
234'
236'
232'
230'
238'
234'
165'
164'
196'
194'
192'
190'
196'
194'
190'
184'
183'
204'
202'
200'
160'
162'
160'
200'
202'
204'
182'
182'
182'
182'

Fig. 22

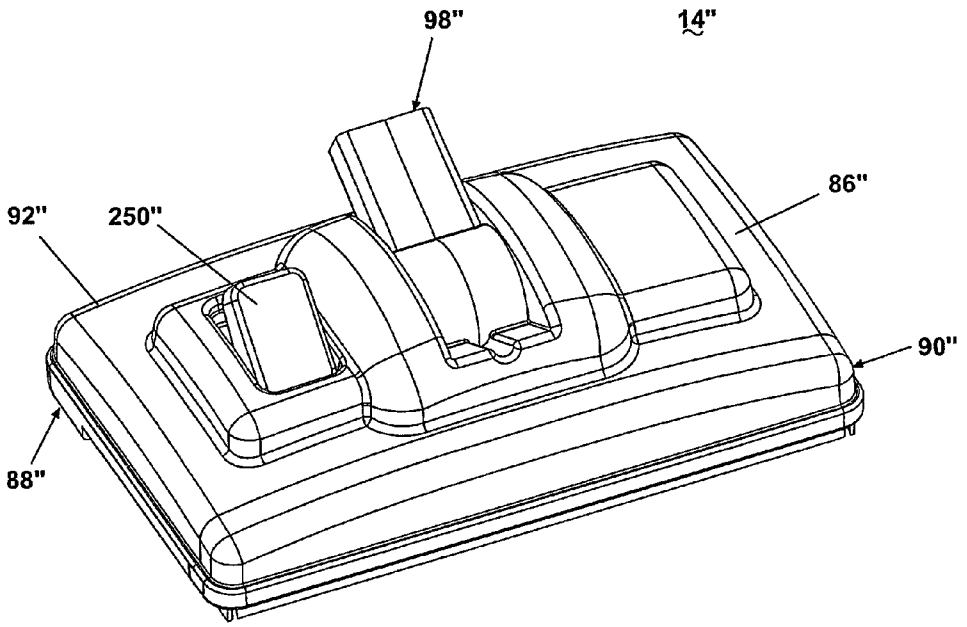

Fig. 23

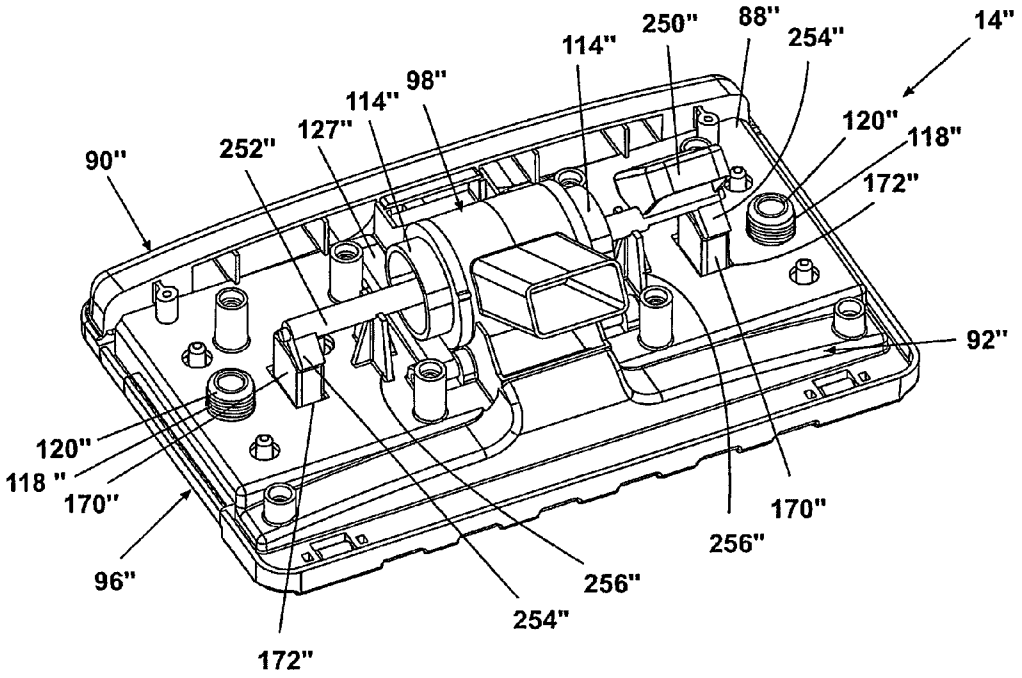
14"
250"
88"
254"
114"
98"
114"
127"
252"
90"
120"
118"
172"
92"
120"
118 "
170"
96"
172"
254"
256"
256"
170"

Fig. 24

BARE FLOOR CLEANER

CROSS-REFERENCE TO RELATED APPLICATION

[0001] This application claims the benefit of U.S. provisional application Ser. No. 60/481,277, filed Aug. 22, 2003, and U.S. provisional application Ser. No. 60/521,253, filed Mar. 19, 2004, which are incorporated herein in their entirety.

BACKGROUND OF THE INVENTION

[0002] 1. Field of the Invention

[0003] The invention relates to wet and dry cleaning of bare floor surfaces. In one aspect, the invention relates to a bare floor cleaner that performs both wet and dry pickup. In another aspect, the invention relates to a bare floor cleaner that selectively performs wet and dry floor cleaning functions by convenient movement of a manipulating handle. In yet another aspect, the invention relates to a bare floor cleaner having a diverter for selectively blocking one of a wet nozzle opening and dry nozzle opening, wherein the diverter is actuated by movement of a handle assembly.

[0004] 2. Description of the Related Art

[0005] The common procedure of cleaning a bare floor surface, such as tile, linoleum, and hardwood floors, involves several steps. First, dry or loose dust, dirt, and debris are removed, followed by applying liquid cleaning solution the surface either directly or by means of an agitator. Motion of the agitator with respect to the bare surface acts to loosen the remaining dirt. The agitator can be a stationary brush or cloth that is moved by the user or a motor driven brush that is moved with respect to a base support by a motor. If the agitator is absorbent, it will remove the dirt and collect a portion of the soiled cleaning solution from the floor; otherwise, the dirt and soiled cleaning solution must be removed by another means. Finally, the remaining soiled cleaning solution on the surface is commonly left to air dry, and the duration of time required for the bare surface to completely dry depends on the amount of residual solution on the floor. During this period, it is best to avoid foot traffic in the area because dirt and debris easily adheres to a wet surface.

[0006] Washing a bare floor is commonly accomplished with multiple cleaning tools. For example, the first step of removing dry particles most often employs a conventional broom and dustpan. However, when sweeping dirt from a pile into the dustpan, it is difficult to transfer the entire pile, and, as a result, a portion of the pile tends to remain on the floor. Additionally, a user typically bends over to hold the dustpan in place while collecting the dirt pile. Such motion can be inconvenient, difficult, and even painful for some users. Dust cloths can also be used, but large dirt particles do not sufficiently adhere thereto. Another option is vacuuming the dry dirt, but most homes are equipped with vacuum cleaners that are designed for use on carpets and can damage bare surfaces.

[0007] Tools for applying and/or agitating cleaning solution have similar deficiencies. The most common cleaning implement for these steps is the traditional sponge or rag mop. Mops are capable of loosening dirt from the floor and have excellent absorbency; however, once the mop requires more cleaning solution, it is placed in a bucket to soak up warm cleaning solution and returned to the floor. Each time, the mop is usually placed in the same bucket, and after several repetitions, the cleaning solution becomes dirty and cold. As a result, spent cleaning solution is used to remove dirt from the bare surface. Furthermore, movement of the mop requires physical exertion, and the mop head wears with use and must be replaced periodically. Textured cloths can be used as an agitator, but they also require physical exertion and regular replacement. Additionally, cloths are not as absorbent as mops and, therefore, can leave more soiled cleaning solution on the floor.

[0008] Some household cleaning devices have been developed to eliminate the need for multiple cleaning implements for washing a bare floor and alleviate some of the problems described above that are associated with the individual tools. Such household devices are usually adapted for vacuuming or sweeping dry dirt and dust prior to application of cleaning solution, applying and agitating the cleaning solution, and, subsequently, vacuuming the soiled cleaning solution, thereby leaving only a small amount of cleaning solution on the bare surface. Common agitators are rotating brushes, rotating mop cloths, and stationary or vibrating sponge mops. A good portion of the multifunctional cleaning devices utilizes an accessory that is attached to the machine to convert between dry and wet cleaning modes. Others are capable of performing all functions without accessories but have complex designs and features that can be difficult and confusing to operate.

[0009] Examples of multi-functional bare floor cleaners are disclosed in U.S. Pat. Nos. 2,622,254 and 6,101,668 and in U.S. Patent Application Publication Nos. 2003/0051301, 2003/0051306, 2003/0051308, 2003/0051309, and 2003/00513010. The '254 patent discloses an apparatus for cleaning bare and carpeted floors and comprises several independently adjustable cleaning implements, such as a squeegee attached to a suction pipe, a scrubbing roll, and a sweeping roll. The apparatus can accomplish wet pickup through the suction pipe, wet scrubbing by means of the scrubbing roll, and dry pickup with a dust collecting nozzle disposed adjacent the sweeping roll.

[0010] The above listed family of patent application publications discloses a bare floor cleaner having independently adjustable nozzle and brush assemblies. The nozzle assembly comprises a single nozzle opening that is surrounded by an overmolded squeegee and through which both wet and dry debris can enter. The cleaner operates in a wet pickup mode with the nozzle assembly in contact with the surface to be cleaned. The nozzle assembly is raised to a position above the surface to be cleaned for operation in a dry pickup mode.

[0011] The '668 patent is an example of a cleaner that can accomplish all the steps required to clean a bare floor with the assistance of an attachment. The cleaner has a cleaning head equipped with a nozzle having squeegees on the front and rear sides thereof and a vertically adjustable scrubbing pad through which cleaning solution can be dispensed. When a cover is attached to the bottom of the cleaning head, the entire cleaning head, including the squeegees, nozzle, and pad, are raised from the floor to permit dry pickup.

SUMMARY OF THE INVENTION

[0012] A wet/dry bare floor cleaner according to the invention comprises a base; a handle pivotally connected to the base; a recovery system comprising a wet suction nozzle, a dry suction nozzle, a recovery tank for receiving wet and dry debris, a working air conduit extending from each of the dry suction nozzle and the wet suction nozzle to the recovery tank, a motor/fan assembly mounted to one of the handle and the base and adapted to create a working air flow in the

working air conduit from at least one of the dry suction nozzle and the wet nozzle and to the recovery tank, and a diverter mounted in the working air conduit and movable between a dry suction position and a wet suction position for selectively at least partially blocking working air flow from the wet suction nozzle and the dry suction nozzle, respectively, to the recovery tank; and the improvement comprising an actuator mounted to the handle and connected to the diverter to move the diverter between the dry suction position and the wet suction position.

[0013] In one embodiment, the actuator includes a connector between the handle and the diverter so that the diverter moves between the dry suction position and the wet suction position as the handle rotates between a dry suction position and a wet suction position.

[0014] In another embodiment, when the handle is in the dry suction position, the handle is pivoted towards the wet suction nozzle. When the handle is in the wet suction position, the handle is pivoted towards the dry suction nozzle. The base has opposite end portions, and the dry suction nozzle and the wet suction nozzle are respectively positioned at the opposite end portions of the base.

[0015] In yet another embodiment, when the handle is in the wet suction position, it overlies one end of the base, and when it is in the dry suction position, it overlies another end of the base.

[0016] In another embodiment, the diverter comprises a cylindrical barrel with an inlet at one side wall portion and an outlet at another side wall portion. The diverter includes a conduit forming the outlet of the cylindrical barrel, and the handle is mounted to the conduit. The conduit forms the connector between the handle and the diverter. The cylindrical barrel is pivotally mounted in the base.

[0017] In yet another embodiment, the wet/dry bare floor cleaner further comprises an agitator mounted to the base for vertical movement between a lowered position in contact with the surface to be cleaned and a raised position above the surface to be cleaned for selectively agitating the surface to be cleaned. The wet/dry bare floor cleaner further comprises a connector between the agitator and the diverter for moving the agitator between the lowered position and the raised position as the diverter moves between the wet suction position and the dry suction position.

[0018] In one embodiment, the agitator is a brush that is movably mounted to the base for scrubbing the surface to be cleaned. The brush can mounted to the base for rotation about a vertical axis and the wet/dry bare floor cleaner can comprise a motor for driving rotational movement of the brush with respect to the base.

[0019] In another embodiment, the agitator is a brush comprising a first set of bristles and a second set of bristles wherein the first bristles are longer than the second bristles and are softer than the second bristles. The first and second sets of bristles are in alternating juxtaposed rows in the brush.

[0020] In yet another embodiment, the wet/dry bare floor cleaner further comprises a fluid delivery system including a fluid tank; a fluid distributor for dispensing fluid onto a surface to be cleaned; and a fluid distribution conduit between the fluid tank and the fluid distributor.

[0021] Further according to the invention, a wet/dry bare floor cleaner according to the invention comprises a base; a handle pivotally connected to the base; a recovery system comprising a wet suction nozzle, a dry suction nozzle, a recovery tank for receiving wet and dry debris, a working air conduit extending from each of the dry suction nozzle and the wet suction nozzle to the recovery tank, a motor/fan assembly mounted to one of the handle and the base and adapted to create a working air flow in the working air conduit from at least one of the dry suction nozzle and the wet nozzle and to the recovery tank, and a diverter mounted in the working air conduit and movable between a dry suction position and a wet suction position for selectively at least partially blocking working air flow from the wet suction nozzle and the dry suction nozzle, respectively, to the recovery tank; and the improvement comprising an agitator mounted to the base for vertical movement between a lowered position in contact with the surface to be cleaned and a raised position above the surface to be cleaned for selectively agitating the surface to be cleaned.

[0022] In one embodiment, the wet/dry bare floor cleaner further comprises a connector between the agitator and the diverter for moving the agitator between the lowered and raised positions.

[0023] In another embodiment, the agitator is a brush that is movably mounted to the base for agitating the surface to be cleaned.

[0024] In yet another embodiment, the agitator is a brush comprising a first set of bristles and a second set of bristles wherein the first bristles are longer than the second bristles and are softer than the second bristles. The first and second sets of bristles can be in alternating juxtaposed rows in the brush.

[0025] Still further according to the invention, a wet/dry bare floor cleaner according to the invention comprises a base; a handle pivotally connected to the base; a recovery system comprising a wet suction nozzle, a dry suction nozzle, a recovery tank for receiving wet and dry debris, a working air conduit extending from each of the dry suction nozzle and the wet suction nozzle to the recovery tank, a diverter mounted in the working air conduit and movable between a dry suction position and a wet suction position for selectively at least partially blocking working air flow from the wet suction nozzle and the dry suction nozzle, respectively, to the recovery tank, and a motor/fan assembly mounted to one of the handle and the base and adapted to create a working air flow in the working air conduit from at least one of the dry suction nozzle and the wet nozzle and to the recovery tank; and the improvement comprising a shut-off valve mounted in the recovery tank and adapted to prevent fluid communication between the motor/fan assembly and the recovery tank when the amount of liquid in the recovery tank reaches a first predetermined amount when the handle is in a first position forward of a vertical position and a second predetermined amount different than the first predetermined amount when the handle is in a second position rearward of the vertical position.

[0026] In one embodiment, the recovery tank comprises an outlet, and the shut-off valve comprises a float adapted to close the outlet when the amount of liquid in the recovery tank reaches the first predetermined amount when the handle is in the first position and the second predetermined amount when the handle is in the second position. The float can be offset from a longitudinal axis of the recovery tank so that the float is below the longitudinal axis when the handle is in the first position and above the longitudinal axis when the handle is in the second position.

[0027] In another embodiment the wet/dry bare floor cleaner further comprises an actuator connected to the handle

and the diverter and adapted to move the diverter between the dry suction position and the wet suction position as the handle rotates between the first position and the second position, respectively.

[0028] In yet another embodiment, the first amount of liquid is less than the second amount of liquid.

[0029] In still another embodiment, the wet/dry bare floor cleaner further comprises a fluid delivery system comprising a fluid tank; a fluid distributor for dispensing fluid onto a surface to be cleaned; and a fluid distribution conduit between the fluid tank and the fluid distributor.

[0030] Still further according to the invention, a wet/dry bare floor cleaner according to the invention comprises a base; a handle pivotally connected to the base for movement between a dry suction position and a wet suction position; a recovery system comprising a wet suction nozzle, a dry suction nozzle, a recovery tank for receiving wet and dry debris, a working air conduit extending from each of the dry suction nozzle and the wet suction nozzle to the recovery tank, a diverter mounted in the working air conduit and movable between a dry suction position and a wet suction position for selectively at least partially blocking working air flow from the wet suction nozzle and the dry suction nozzle, respectively, to the recovery tank; and a motor/fan assembly mounted to one of the handle and the base and adapted to create a working air flow in the working air conduit from at least one of the dry suction nozzle and the wet nozzle and to the recovery tank; and the improvement comprising a bi-directional grip on the handle having a first portion adapted to be conveniently gripped by a hand of the user when the handle is in the dry suction position and a second portion which is adapted to be conveniently gripped by the hand of the user in substantially the same relative position when the handle is in the wet suction position.

[0031] In one embodiment, the first portion extends away from the handle in one direction, and the second portion extends away from the handle in an opposite direction. The first portion and the second portion are bilaterally symmetric.

[0032] In another embodiment, the wet/dry bare floor cleaner further comprises a fluid delivery system comprising a fluid tank; a fluid distributor for dispensing fluid onto a surface to be cleaned; and a fluid distribution conduit between the fluid tank and the fluid distributor.

[0033] In one embodiment, the wet/dry bare floor cleaner further comprises a trigger mounted to one of the first and second portions and connected to the fluid distribution system to distribute fluid to the surface to be cleaned.

[0034] In yet another embodiment, the base has opposite end portions, and the dry suction nozzle and the wet suction nozzle are respectively positioned at opposite end portions of the base. When the handle is in the wet suction position, it overlies one end of the base, and when it is in the dry suction position, it overlies the opposite end of the base.

BRIEF DESCRIPTION OF THE DRAWINGS

[0035] In the drawings:

[0036] FIG. **1**A is a front perspective view of a bare floor cleaner according to the invention and comprising a foot assembly and a handle assembly.

[0037] FIG. **1**B is a rear perspective view of the bare floor cleaner shown in FIG. **1**A.

[0038] FIG. **2**A is a rear perspective view of the bare floor cleaner shown in FIG. **1**A and pivoted relative to the foot assembly to a first position.

[0039] FIG. **2**B is a rear perspective view of the bare floor cleaner shown in FIG. **1**A and pivoted relative to the foot assembly to a second position.

[0040] FIG. **3** is an exploded view of the handle assembly of the bare floor cleaner shown in FIG. **1**.

[0041] FIG. **4** is a side view of a grip of the handle assembly shown in FIG. **3**, wherein one half of the grip has been removed to show the interior of the grip.

[0042] FIG. **5** is a rear perspective view of a solution tank assembly from the handle assembly shown in FIG. **3**.

[0043] FIG. **6** is a bottom perspective view of a recovery tank assembly from the handle assembly shown in FIG. **3**.

[0044] FIG. **7** is an exploded view of the recovery tank assembly shown in FIG. **6**.

[0045] FIG. **8** is a sectional view of the recovery tank assembly shown in FIG. **6**.

[0046] FIG. **8**A is a sectional view similar to FIG. **8** with the recovery tank assembly tilted rearward.

[0047] FIG. **8**B is a sectional view similar to FIG. **8** with the recovery tank assembly tilted forward.

[0048] FIG. **9** is a front perspective view of the foot assembly of the bare floor cleaner shown in FIG. **1** and comprising wet and dry nozzle assemblies.

[0049] FIG. **10** is an exploded view of the foot assembly shown in FIG. **9**.

[0050] FIG. **11** is a perspective view of a handle pivot from the foot assembly shown in FIG. **9**.

[0051] FIG. **12** is a sectional view taken along line **12-12** of FIG. **11**.

[0052] FIG. **13** is a perspective view of the foot assembly shown in FIG. **9** with a top enclosure removed.

[0053] FIG. **14** is a side view of a cam assembly from the foot assembly shown in FIG. **9**.

[0054] FIG. **15** is a sectional view of the foot assembly taken along line **15-15** of FIG. **9**.

[0055] FIG. **16** is an exploded view of an agitator assembly from the foot assembly shown in FIG. **9**.

[0056] FIG. **16**A is a perspective view of a scrubbing support from the agitator assembly shown in FIG. **16**.

[0057] FIG. **17** is an exploded view of the wet nozzle assembly shown in FIG. **9**.

[0058] FIG. **18** is a sectional view of the foot assembly taken along line **18-18** of FIG. **9**.

[0059] FIG. **19** is a sectional view taken along line **19-19** of FIG. **9**, wherein the bare floor cleaner is in a dry mode.

[0060] FIG. **20** is a sectional view similar to FIG. **19**, wherein the bare floor cleaner is in a wet mode.

[0061] FIG. **21** is an exploded view of a frame from the foot assembly shown in FIG. **10** and an alternative agitator assembly.

[0062] FIG. **22** is an exploded view of the alternative agitator assembly shown in FIG. **22**.

[0063] FIG. **23** is a front perspective view of an alternative foot assembly for the bare floor cleaner shown in FIG. **1**.

[0064] FIG. **24** is a rear perspective view of the alternative foot assembly shown in FIG. **23** with a top enclosure removed.

DESCRIPTION OF THE PREFERRED EMBODIMENTS

[0065] Referring to the drawings and to FIGS. **1**A, **1**B, **2**A, and **2**B in particular, a wet/dry bare floor cleaner **10** according to the invention comprises a handle assembly **12** pivotally mounted to a base or foot assembly **14**. The handle assembly

12 can pivot from an upright, vertical position, as shown in FIGS. 1A and 1B, wherein the handle is substantially vertical relative to the surface to be cleaned, to either direction relative to the foot assembly 14. In particular, the handle assembly 12 can pivot to a first position forward of the upright position, as shown in FIG. 2A, or to a second position rearward of the vertical position, as illustrated in FIG. 2B.

[0066] Referring additionally to FIGS. 3 and 4, the handle assembly 12 comprises an upper handle 16 and a lower handle 18, and the upper handle 16 comprises a hollow tube 20 with an upper end 20A and a lower end 20B. A bi-directional grip 22 is fixedly attached to the upper end 20A of the tube 20; however, it is within the scope of the invention to utilize other grips commonly found on upright vacuum cleaners and extraction machines. The grip 22 provides a user interface to manipulate the wet/dry bare floor cleaner 10 when the handle assembly 12 is in either the first position or the second position. In particular, the grip 22 has a first portion 22A and a second portion 22B that extend away from the tube 20 in opposite directions, and, preferably, the first and the second portions 22A, 22B are bilaterally symmetrical. When the handle assembly 12 is in the first position, the user grasps the first portion 22A of the grip 22 with a hand 19, as shown in FIG. 2A, to move the bare floor cleaner 10 across the surface to be cleaned. Conversely, when the handle assembly 12 is in the second position, the user grasps the second portion 22B of the grip 22 with the hand 19, as depicted in FIG. 2B. Because the grip 22 is bilaterally symmetrical, the first and second portions 22A, 22B can be grasped by the user in substantially the same relative position when the handle assembly 12 is in the first and second positions, respectively. As a result, the feel of the grip 22 in the hand 19 is generally the same regardless of the orientation of the handle assembly 12. Additionally, the grip 22 preferably comprises two halves that mate to form a recess therebetween. As best viewed in FIG. 4, wherein one of the halves of the grip 22 is removed for illustrative purposes, a trigger 24 is mounted to the second portion 22B of the grip 22 with a portion of the trigger 24 projecting inward toward the second portion 22B of the grip 22. The rest of the trigger 24 resides in the recess formed by the grip 22 and communicates with a push rod 25 that runs through the hollow interior of the tube 20. A cord wrap 26A attached to, or integrally molded with, the grip 22 forms a peg-like structure oriented generally orthogonal relative to the tube 20 for storing a power cord (not shown). The lower end 20B of the tube 20 is fixedly attached to the lower handle 18.

[0067] The lower handle 18 comprises a generally elongated rear enclosure 28, which includes a lower viewing aperture 84 and provides structural support for components contained therein. A front enclosure 29 mates with the rear enclosure 28 to form a central cavity 36 therebetween and a first recess 32 above the front enclosure 29 and a second recess 34 below the front enclosure 29. The lower handle 18 comprises an upper end 18A and a lower end 18B, and a carry handle 30 at the upper end 18A. The carry handle 30 is disposed at an angle relative to the tube 20 and facilitates manually lifting the bare floor cleaner 10 from the surface to be cleaned. A second cord wrap 26B is located on an upper surface of the rear enclosure 28 near the carry handle 30. The power cord can be wrapped around the cord wraps 26A, 26B on the upper handle 16 and the lower handle 18 to conveniently store the power cord when the cleaner 10 is not in use. The lower end 18B of the lower handle 18 comprises a generally rectangular conduit 31 defining a working air inlet that fluidly communicates the handle assembly 12 with the foot assembly 14.

[0068] A motor/fan assembly 33 is mounted in the cavity 36 defined by the rear enclosure 28 and the front enclosure 29 and located between the first recess 32 and the second recess 34. The motor/fan assembly 33 creates airflow, which moves debris and liquid material from the surface being cleaned and through the cleaner 10. The power cord is connected to the motor/fan assembly 33 through an electrical on/off switch 38 located on either the rear enclosure 28, the front enclosure 29, or therebetween.

[0069] Referring to FIGS. 1A, 3 and 5, a solution tank assembly 40 is removably mounted to the lower handle 18 such that it partially rests on the front enclosure 29 and is partially received by the first recess 32. The solution tank assembly 40 comprises a tank 41 to hold a predetermined amount of liquid, such as water, cleaning detergent, or a mixture thereof. A tank grip 42 sized to receive at least a portion of a user's hand is integrally molded in both sides of the tank 41. The solution tank assembly 40 further comprises a tank valve assembly 43 similar to that found in U.S. Pat. No. 6,467,122, which is incorporated herein by reference in its entirety. The tank valve 43 mates with a receiver valve assembly 45 mounted to the rear enclosure 28 and located above the motor/fan assembly 33. A flexible conduit 49 is fluidly connected to an output of the receiver valve assembly 45 and is routed through the lower handle 18 to the foot assembly 14. The receiver valve assembly 45 is actuated and opened when the user depresses the trigger 24 to thereby force the push rod 25 to travel a predetermined distance and open the receiver valve assembly 45. Once the receiver valve assembly 45 is opened, solution moves under force of gravity from the solution tank assembly 40, through the receiver valve assembly 45, and through the conduit 49 to the foot assembly 14.

[0070] Referring to FIGS. 1A, 1B, 3, and 6-8B, a recovery tank assembly 50, preferably constructed, at least partially, of a translucent material, is removably received in the second cavity 34. Because the recovery tank 52 is at least partially translucent, a user can view liquid, dirt, and debris in the recovery tank assembly 50 through the viewing aperture 84 in the rear enclosure 28, as best seen in FIG. 1B. This feature is especially useful when the handle assembly 12 is oriented in the second position.

[0071] The recovery tank assembly 50 comprises a recovery tank 52 with an integral hollow standpipe 54 formed therein. The standpipe 54 is oriented such that it is generally coincident with a longitudinal axis of the recovery tank 52. The standpipe 54 forms a flow path between an inlet 56 formed at a lower end of the recovery tank 52 and an outlet 58 on the interior of the recovery tank 52. When the recovery tank assembly 50 is mounted to the handle assembly 12, the inlet 56 is aligned with the rectangular conduit 31 to establish fluid communication between the foot assembly 14 and the recovery tank 52. A flared diffuser 76 that aids in separation of liquid and debris from air is mounted to an upper portion of the standpipe 54. A lid 60 sized for receipt on the recovery tank 52 supports a commonly known pleated filter 62 in a filter chamber 67 formed between a bottom wall 66 of the lid 60 and a filter chamber top 64 mounted to the lid 60. Preferably, the pleated filter 62 is made of a material that remains porous when wet. The lid 60 further comprises an inlet aperture 68 formed through the bottom wall 66, and the filter chamber top 64 includes an outlet aperture 70. A gasket 78

positioned between mating surfaces of the lid **60** and the recovery tank **52** creates a seal therebetween for prevention of leaks. Further, the recovery tank assembly **50** is designed so that no lift is produced at either of the wet and dry suction nozzle openings **145**, **152** if the pleated filter **62** is not in the filter chamber **67**. In the absence of the pleated filter **62**, an intentional large leak prevents debris from being drawn into the recovery tank **52** and the motor/fan assembly **33** to thereby protect the motor/fan assembly **33** from premature failure.

[0072] A shut-off valve comprising a float cage **72** that encloses a movable float **74** is fixedly attached to the bottom wall **66** of the lid **60** and is in fluid communication with the inlet aperture **68**. The float **74** is buoyant and oriented so that the top of the float **74** can selectively seal the inlet aperture **68** when the fluid in the recovery tank reaches a predetermined level. The float cage **72** resides in the recovery tank **52** in a position offset from the standpipe **54**. The float cage **72** is preferably located forward of the standpipe **54** and on the same side of the bare floor cleaner **10** as the trigger **25**. Consequently, an amount of liquid **51** in the recovery tank **52** required for the float **74** to seal the inlet aperture **68** is less when the handle assembly **12** is pivoted to the first position with the float cage **72** below the standpipe **54**, as shown in FIG. **8**A, than when the handle assembly **12** is pivoted to the second position with the float cage **72** above the standpipe **54**, as illustrated in FIG. **8**B. The first and second positions of the handle assembly **12** respectively correspond to dry and wet operation modes, as will be described in further detail hereinafter.

[0073] A latch **80**, which is positioned on an upper forward portion of the lid **60**, releasbly engages with the front enclosure **29** for removably securing the recovery tank assembly **50** to the handle assembly **12**. A hand grip **82** integrally formed in the recovery tank **52** and located below the latch **80** facilitates handling of the recovery tank assembly **50** by the user when mounting the recovery tank assembly **50** to and removing it from the handle assembly **12**.

[0074] Arrows shown in FIG. **8** indicate the flow of working air created by the motor/fan assembly **33** through the recovery tank assembly **50**. Working air from the foot **14** enters the recovery tank assembly **50** at the inlet **56**, travels through the standpipe **54**, over the top of the diffuser **76**, through the float cage **72**, through the inlet aperture **68**, through the filter **62**, and through the outlet aperture **70** to an inlet on the motor/fan assembly **33**. Heavier debris and liquid separate from the air stream when the working air passes over the diffuser **76** and hits the bottom wall **66** of the lid **60**. The debris and liquid removed from the air stream fall to a lower portion of the tank **52**, where they are stored until the recovery tank **52** is emptied by the user.

[0075] Referring to FIGS. **9-10**, the foot assembly **14** comprises a top enclosure **86** mounted to a frame **88** to define a cavity therebetween that houses several components of the foot assembly **14**. The frame **88** provides structural support for several of the foot assembly components, such as a handle pivot **98** for pivotally mounting the handle assembly **12** to the foot assembly **14**, wet and dry nozzle assemblies **90**, **92** on opposite sides of the foot assembly **14** for suctioning wet and dry debris, respectively, from the surface to be cleaned, a vertically adjustable wheel carriage assembly **94**, and an agitator assembly **96**.

[0076] Referring additionally to FIGS. **11-13**, the handle pivot **98** comprises a barrel **100** with a longitudinal inlet aperture **102** formed in a sidewall thereof. A generally rectangular conduit **104** extends from the aperture **102** and diametrically through the barrel **100** and projects radially outward from another sidewall portion of the barrel **100** to define an air flow path through the handle pivot **98** and an outlet therefor. The handle pivot **98** is retained on the pivot cradle **108** by the top enclosure **86** when it is mated with the frame **88**. The conduit **104** projects through the top enclosure **86** and is received by the conduit **31** with a seal **35** therebetween to connect the handle assembly **12** to the handle pivot **98**. Hence, the air flow path extends from the handle pivot **98** and through the conduit **31** to the recovery tank assembly **50**. In the foot assembly **14**, the handle pivot **98** rests on and rotates over a pivot cradle **108** mounted to the frame **88**. The pivot cradle **108** has a central longitudinal plug **109** positioned between two apertures **107**A, **107**B and sized to mate with and block the aperture **102**. Because the conduit **31** of the lower handle **18** receives the conduit **104** of the handle pivot **98**, the handle pivot **98** rotates within the pivot cradle **108** when the handle assembly **12** pivots relative to the foot assembly **14**.

[0077] Referring to FIGS. **10** and **13-15**, a cam assembly **112** is fixedly attached to each end of the barrel **100** of the handle pivot **98** for rotation therewith. The cam assembly **112** comprises a wheel carriage lobe **114** that interfaces with the wheel carriage assembly **94** and an agitator lobe **116** that interfaces with the agitator assembly **96**. The wheel carriage lobe **114** is generally circular and comprises a first portion **114**A with a first radius and a second portion **114**B with a second radius that is less than the first radius. The agitator lobe **116** comprises a circular shaft **115** with a generally rectangular radial projection **117**. Additionally, a detent plunger **122** extends through an outer periphery of each cam assembly **112**, as best viewed in FIG. **15**. Each plunger **122** is radially oriented within the cam assembly **112** and is biased radially outward by a detent spring **121**. The end of the plunger **122** that projects beyond the cam assembly **112** is ramped to correspond with a detent recess (not shown) in the top enclosure **86**. The detent plunger **122** resides with the detent recess to maintain the handle assembly **12** in the upright, or storage, position (i.e., the handle position indicated by the number **3** in FIG. **15**). When the handle assembly **12** rotates in the pivot cradle **108** from the upright position, interaction between the ramped end and the top enclosure **86** overcomes the bias of the spring **121** and pushes the detent plunger **122** into the cam assembly **112** so that the handle assembly **12** can pivot into either the first or second position.

[0078] The wheel carriage assembly **94** comprises a generally U-shaped frame formed by an elongated wheel support **126** and a pair of spaced, L-shaped arms **127**. The support **126** carries a plurality of wheels **130** on a lower side thereof, and the entire frame can pivot about pivot pins **128** that extend through the arms **127** at an end opposite the support **126**. When the frame pivots about the pivot pins **128**, the support **126** raises and lowers the wheels **130** relative to the foot assembly **14**. The wheel carriage assembly **94** is mounted to the frame **88** such that an upper surface of the arms **127** abuts the wheel carriage lobes **114** of the cam assembles **112** to form the above mentioned interface.

[0079] Referring particularly to FIG. **15**, rotation of the handle assembly **12** between the first and second positions induces rotation of the handle pivot **98** and, thus, the cam assemblies **12**. When the cam assemblies **12** are positioned such that the first portion **114**A of the wheel carriage lobe **114** abuts the arms **127** of the wheel carriage assembly **94**, the

wheel carriage lobe **114** applies a downward force to the wheel carriage assembly **94** to lower the wheels **130** and effectively raise the wet nozzle assembly **90** off the surface to be cleaned. This configuration corresponds to a dry operational mode for the bare floor cleaner **10** and is achieved when the handle assembly **12**, which is connected to the handle pivot **98**, rotates towards the wet nozzle assembly **90** to the first position (i.e., the handle position indicated by the number **1** in FIG. **15**). When the handle assembly **12** is in the first position, the dry nozzle assembly **92** is in front of the wet nozzle assembly **90**, and the inlet aperture **102** is aligned with the aperture **107**A. When the handle assembly **12** rotates in the opposite direction to the second position (i.e., the handle position indicated by the number **2** in FIG. **15**), the second portion **114**B of the wheel carriage lobe **114** abuts the wheel carriage assembly **94**. Because the radius of the second portion **114**B is smaller than the radius of the first portion **114**A, the wheel carriage assembly **94** raises within the foot assembly **14** and away from the surface to be cleaned. As a result, the wet nozzle assembly **92** is effectively lowered and contacts the surface to be cleaned. When the handle assembly **12** is in the second position, the wet nozzle assembly **90** is in front of the dry nozzle assembly **92**, and the inlet aperture **102** is aligned with the aperture **107**B. This configuration corresponds to a wet mode of the bare floor cleaner **10**.

[0080] Referring now to FIGS. **10**, **13**, **16**, and **16**A, the agitator assembly **96** comprises a scrubbing plate **160**, a scrubbing support **162**, and a fluid distributor bar **164**. The scrubbing support **162** comprises a plurality of alignment pins **166** and engagement blocks **170** that respectively correspond with a plurality of alignment pin apertures **168** and engagement block apertures **172** in the foot assembly frame **88**. A dimensional clearance between the engagement blocks **170** and the engagement block apertures **172** enables lateral displacement of the scrubbing plate **160** for enhanced agitation of the surface to be cleaned for improved cleaning performance. The scrubbing support **162** is secured to foot assembly frame **88** by retainers **120** positioned on the pins **166**. Springs **118** surround the pins **116** between the retainers **120** and the frame **88**, which can be seen in FIG. **13**, to bias the scrubbing support **162** against the undersurface of the frame **88**. The agitator assembly **96** is mounted to the frame **88** such that an upper surface of the engagement blocks **170** abuts the agitator lobes **116**, which mechanically connect the handle pivot **98** to the agitator assembly **96**. Furthermore, the scrubbing support **162** incorporates a pair of slide rails **174** for removably mounting the scrubbing plate **160** thereto.

[0081] The scrubbing plate **160** is slidingly received between the slide rails **174** and comprises a plurality of downwardly facing agitation bristles **182**, a fluid bar recess **184**, and a finger grip **180**. The finger grip **180** is integrally formed on a side edge surface of the scrubbing plate **160** to facilitate removal of the scrubbing plate **160** from the scrubbing support **162**. The fluid bar recess **184** supports the fluid bar **164**, which has a fitting **165** in fluid communication with the flexible conduit **49** that receives fluid from the solution tank assembly **40**. Fluid from the flexible conduit **49** enters the fluid distributor bar **164** through the fitting **165**, and the fluid is distributed through openings **183** in the scrubbing plate **160** to the surface to be cleaned.

[0082] A sponge pad or any suitable agitation device such as an abrasive cloth can be attached to the scrubbing plate **160** in place of or in addition to the bristles **182**. The bristles **182** can be of uniform or varying size, shape, and flexibility. In one embodiment, short, stiff bristles are interspersed among long, flexible bristles to thereby provide a soft brush for delicate surfaces and rigid brush for more aggressive cleaning. The stiff bristles and soft bristles can be arranged in alternating, juxtaposed rows. The stiff bristles contact the surface to be cleaned when a downward force is applied to the bare floor cleaner **10**. A variety of agitation devices can be used and interchanged according to the type of surface to be cleaned and the action to be performed on the surface to be cleaned.

[0083] Referring particularly to FIGS. **13**, **19**, and **20**, when the handle assembly **12** rotates between the first and second positions, the agitator lobes **116** on the cam assemblies **12** rotate to vertically displace the agitator assembly **96**. When the handle assembly **12** is in the first position, wherein the dry nozzle assembly **92** is in front of the wet nozzle assembly **90**, the shafts **115** of the agitator lobes **116** abut the engagement blocks **170** of the agitator assembly **96**. In this position, the springs **118** pull the scrubbing support **162** into abutting contact with the foot assembly frame **88** to raise the agitator assembly **96** from the surface to be cleaned. The agitator assembly is thus biased to a raised position, wherein the bristles **182** are positioned above the surface to be cleaned. When the handle assembly **12** rotates to the second position, wherein the wet nozzle assembly **90** is in front of the dry nozzle assembly **92**, the projections **117** of the agitator lobes **116** abut the engagement blocks **170** of the agitator assembly **96** and thereby force the agitator assembly **96** downward against the bias of the spring **118** to a lowered position, wherein the bristles **182** are in contact with the surface to be cleaned. The agitator assembly **96** is positioned directly under the handle pivot **98** and is dimensioned so that the full weight of the bare floor cleaner **10** is supported by the agitator assembly **96** when the handle assembly **12** is in the second position and the bare floor cleaner **10** is in the wet mode. The user can easily apply additional force on the agitator assembly **96** by applying downward force to the handle assembly **12**.

[0084] Referring to FIGS. **10** and **17**, the wet nozzle assembly **90** comprises a wet nozzle housing **132** and a latch mechanism **134** disposed in a latch recess **146** on the wet nozzle housing **132** for removably mounting the wet nozzle assembly **90** to the foot assembly **14**. The wet nozzle housing **132** forms a suction conduit that defines a working air path that extends from a wet suction nozzle opening **145** at a lower end of the wet nozzle housing **132** to an outlet at an upper end of the wet nozzle housing **132**. To facilitate attaching the wet nozzle assembly **90** to and removing it from the foot assembly **14**, the wet nozzle housing **132** further comprises a plurality of protruding hooks (not shown) located on a rearward surface of the wet nozzle housing **132** above the wet suction nozzle opening **145**. The hooks are sized to be received by corresponding slots (not shown) in the foot assembly **14**. When the wet nozzle assembly **90** is mounted to the foot assembly **14**, the outlet is aligned with the aperture **107**B in the pivot cradle **108**. A gasket **138** positioned between the wet nozzle housing **132** and the pivot cradle **108** seals the working air path at the juncture therebetween.

[0085] The wet suction nozzle opening **145** is surrounded by a dual squeegee assembly **136** that contacts the surface to be cleaned when the bare floor cleaner **10** is in the wet mode. The dual squeegee assembly **136** comprises an integral bumper **140** and a pair of parallel squeegees **142** that extend down from the wet nozzle housing **132**. The squeegees **142** comprise a plurality of nubs **147** on their outer surfaces and

are flat on their inner surfaces. During use, as the bare floor cleaner **10** moves forward, the forward squeegee **142** is biased in a rearward direction, thereby placing its nubs **147** on the surface to be cleaned and creating airspace between the nubs **147**. The rearward squeegee **142** is also biased in a rearward direction such that its flat inner surface contacts the surface to create a seal therebetween at the rear of the wet suction nozzle opening **145**. When the bare floor cleaner **10** moves backwards, the squeegees **142** flex in a forward direction. As a result, the rearward squeegee **142** rests on its nubs **147** while the flat inner surface of the forward squeegee **142** contacts the surface to create a seal therebetween. The dual squeegee assembly **136** allows surface liquid to pass between the nubs **147** while maintaining high lift through the wet suction nozzle opening **145** and leaves the surface relatively dry upon completion of wet suction. The bumper **140** on the squeegee assembly **136** prevents damage to furniture and other objects as the bare floor cleaner **10** moves across the surface to be cleaned.

[0086] The wet nozzle assembly **90** is preferably removable from the foot assembly **14** for cleaning or replacement. The wet nozzle assembly **90** is attached to the foot assembly frame **88** by the latch mechanism **134**, which comprises a pair of opposing latches **141** forced apart by a latch spring **144** located therebetween. The latches **141** and the latch spring **144** are contained in the latch recess **146** and held in place with a latch cover **148** having a pair of latch apertures **150** through which a user can access the latches **141**. Each latch **141** is slidable relative to the wet nozzle housing **132** and comprises a protrusion **143** that is urged by the latch spring **144** through a corresponding aperture in the wet nozzle housing **132** and a corresponding detent **131** in the top enclosure **86** of the foot assembly **14**. Interaction of the protrusions **143** and the detents **131** retains the wet nozzle assembly **90** on the foot assembly **14**. To disengage the latches **141**, the user moves the latches **141** toward one another against the bias of the spring **144** to remove the protrusions **143** from the detents **131**. The wet nozzle housing **90** can thereafter be rotated away from the top enclosure **86** about the hooks on the rearward surface of the wet nozzle housing **132** to remove the wet nozzle housing **90** from the foot assembly top enclosure **86** and the frame **88**. When the wet nozzle assembly **90** is removed, the user can access the handle pivot **98**.

[0087] Referring to FIGS. **10**, **13**, and **18**, the dry nozzle assembly **92** comprises a dry suction conduit **91** formed on the foot assembly frame **88** on a side opposite the wet nozzle assembly **90**. The dry suction conduit **91** forms a working air path between an elongated, transverse dry suction nozzle opening **152** and an outlet at an upper end of the dry suction conduit **91**, which is aligned with the aperture **107**A in the pivot cradle **108**. The foot assembly **14** further comprises a dry nozzle bumper **154** affixed to the top enclosure **86** adjacent the dry nozzle assembly **92**, a dry scraper **155** adjacent the dry suction nozzle opening **152**, and a pair of fixed wheels **156** mounted to the foot assembly frame **88** between the dry nozzle bumper **154** and the dry suction nozzle opening **152**. Furthermore, a plurality of tapered lead-in grooves (not shown) are molded into a bottom surface of the dry nozzle assembly **92** and are configured such that the grooves taper toward the dry suction nozzle opening **152** to guide dust and debris thereto. The shape and location of the grooves promote maximum lift at the dry suction nozzle opening **152** while allowing large debris to pass into the dry suction conduit **91**.

[0088] When the bare floor cleaner **10** is not in use, the handle assembly **12** is in the vertical upright position, as illustrated in FIG. **18**. In this position, the handle pivot **98** is positioned such that the plug **109** in the pivot cradle **108** abuts the aperture **102** in the barrel **100** of the handle pivot **98** to block air flow therethrough. As a result, neither the wet nozzle assembly **90** nor the dry nozzle assembly **92** is in fluid communication with the recovery tank assembly **50** and, thus, the motor/fan assembly **33**.

[0089] Referring now to FIGS. **19** and **20**, the bare floor cleaner **10** is capable of at least two modes of operation: the dry mode (FIG. **19**) and the wet mode (FIG. **20**). The user switches between modes by rotating the handle assembly **12** between the first and the second positions. As the handle assembly **12** rotates, the handle pivot **98** also rotates and selectively prevents fluid communication between the recovery tank assembly **50** and one of the wet suction nozzle opening **145** and the dry suction nozzle opening **152**. Thus, the barrel **100** of the handle pivot **98** functions as a diverter valve that is actuated by pivoting the handle assembly **12**. Further, the conduit **104** of the handle pivot **98** not only defines part of the working air conduit, but it also connects the handle assembly **12** with the barrel **100** so that movement of the handle assembly **12** translates into movement of the diverter valve.

[0090] In the dry mode, the handle assembly **12** is in the first position over the wet nozzle assembly **90** such that the dry nozzle assembly **92** is in a forward position relative to the wet nozzle assembly **90**. When the handle assembly **12** is positioned over the wet nozzle assembly **90**, as shown in FIGS. **2**A and **19**, the inlet aperture **102** of the handle pivot **98** is aligned with the aperture **107**A in the pivot cradle **108**, and the barrel **100** blocks the aperture **107**B that is in fluid communication with the wet nozzle assembly **90**. As a result, a working air conduit, which is indicated with arrows, extends from the dry nozzle aperture **152**, through the dry nozzle assembly **92**, through space between the foot assembly frame **88** and the top enclosure **86**, through the opening **107**A, through the inlet aperture **102**, through the rectangular conduit **104** that projects from the pivot barrel **100**, and through the conduit **31** to the inlet **56** of the recovery tank **52**.

[0091] In the dry mode, the handle pivot cam assemblies **112** are oriented such that the first portions **114**A of the wheel carriage lobes **114** simultaneously engage the arms **127** of the wheel carriage frame **126** to thereby force the wheel carriage frame **126** away from the foot assembly frame **88** and towards the surface to be cleaned. As a result, the foot assembly frame **88**, including the squeegee assembly **136** on the wet nozzle assembly **90**, is raised from the surface to be cleaned. At the same time, the shafts **115** of the agitator lobes **116** abut the engagement blocks **170** of the agitator assembly **96** so that the springs **118** raise the scrubbing plate **162** from the surface to be cleaned.

[0092] With the handle assembly **12** in the first position, the user grasps the first portion **22**A of the grip **22** and moves the bare floor cleaner **10** across the surface to be cleaned. Dirt and debris near the dry suction nozzle opening **152** enters the dry nozzle assembly **92** therethrough and flows through the working air conduit to the recovery tank **52**, where it is separated from the working air and deposited into the recovery tank **52**. Thereafter, the working air continues to flow through the float cage **72**, the inlet aperture **68**, and the filter **62** before entering the motor/fan assembly **33**.

[0093] Referring now to FIGS. **2**A and **20**, in the wet mode, the handle assembly **12** is in the second position over the dry nozzle assembly **92** such that the wet nozzle assembly **90** is in front of the dry nozzle assembly **92**. When the handle assembly **12** is in the second position, the inlet aperture **102** of the handle pivot **98** is aligned with the aperture **107**B in the pivot cradle **108**, and the barrel **100** blocks the aperture **107**A that is in fluid communication with the dry nozzle assembly **92**. As a result, a working air conduit, which is indicated with arrows in FIG. **20**, extends from the wet nozzle suction opening **145** between the squeegees **142** of the squeegee assembly **136**, through the wet suction nozzle assembly **90**, through the aperture **107**B in the pivot cradle to the handle pivot aperture **102**, through the rectangular conduit **104** that extends from the handle pivot barrel **100**, and through the conduit **31** to the inlet **56** of the recovery tank **52**.

[0094] In the wet mode, the handle pivot cam assemblies **112** are oriented such that the second portions **114**B of the wheel carriage lobes **114** simultaneously engage the wheel carriage frame **126** to thereby retract the wheel carriage **126** from the surface to be cleaned and towards the foot assembly frame **88**. As a result, the foot assembly frame **88**, including the wet nozzle assembly **90** and the squeegee assembly **136**, is lowered to the surface to be cleaned. Additionally, the projections **117** of the agitator lobes **116** rotate into abutting contact with the engagement blocks **170** of the agitator assembly **96** to lower the scrubbing plate **160** as described previously.

[0095] Optionally, cleaning fluid can be dispensed onto the surface to be cleaned when the bare floor cleaner **10** is in the wet mode. Cleaning fluid can be selectively dispensed from the clean solution tank **41** via the trigger **24**, which opens the receiver valve assembly **45**. Subsequently, cleaning fluid flows by gravity through the fluid conduit **49**, the fluid fitting **165**, and the fluid bar **164** that is attached to the scrubbing support **162**. Ultimately, the cleaning solution travels from the fluid bar **164** to the surface to be cleaned through the openings **183** in the fluid bar recess **184** on the scrubbing plate **160**.

[0096] With the handle assembly **12** in the second position, the user grasps the second portion **22**B of the grip **22** and moves the bare floor cleaner **10** across the surface to be cleaned. Soiled cleaning fluid and wet dirt and debris collected by the squeegee assembly **136** near the wet suction nozzle opening **145** enters the wet nozzle assembly **90** therethrough and flows through the working air conduit to the recovery tank **52**, where it is separated from the working air and deposited into the recovery tank **52**. Thereafter, the working air continues to flow through the float cage **72**, the inlet aperture **68**, and the filter **62** before entering the motor/fan assembly **33**. Because the float cage **72** and the inlet aperture **68** are positioned above the standpipe **54**, the amount of liquid required to close the shut-off valve is greater than when the bare floor cleaner **10** is in the dry mode.

[0097] An alternative agitator assembly **96'** is illustrated in FIGS. **21** and **22**, where components similar to those of the previous embodiment are labeled with the same reference numeral bearing a prime (') symbol. The agitator assembly **96'** comprises a pair of scrubbing plates **160'** rotatably mounted to a scrubbing support **162'** coupled to the frame **88** of the foot assembly **14**. Each of the scrubbing plates **160'** carries a plurality of bristles **182'** for agitating the surface to be cleaned and comprises three arcuate lobes **206'**, wherein the center points of the lobes **206'** are arranged in an equilateral triangle configuration. Additionally, each scrubbing plate **160'** includes an upstanding shaft **200'** that defines a vertical axis and includes a central keyed longitudinal channel **202'** and a transverse pinhole **204'**. The scrubbing plates **160'** are rotationally offset from one another such that one lobe **206'** of one scrubbing plate **160'** is received between two adjacent lobes **206'** of the other scrubbing plate **160'** in the region between the scrubbing plates **160'**. This arrangement ensures that the bristles **182'** are continuous across the agitator assembly **96'**.

[0098] As in the first embodiment agitator assembly **96**, the scrubbing support **162'** comprises a fluid bar recess **184'** sized to receive the fluid bar **164** and includes a plurality of openings **183'** for delivering fluid through the scrubbing support **162'** and onto the surface to be cleaned. Further, a motor housing **192'** on an upper surface of the scrubbing support **162'** holds an agitator motor **186'** having a drive shaft **188'**. The scrubbing support **162'** also has a gear housing **190'** with a pair of first bearings **194'** that surround apertures in the scrubbing support **162'** and a pair of second, smaller bearings **196'** between the first bearings **194'**.

[0099] The gear housing **190'** supports a gear assembly that mechanically couples the scrubbing plates **160'** to the agitator motor **186'**. The gear assembly comprises a pair of agitator spur gears **210'** situated on the first bearings **194'** and having a longitudinal keyed aperture **212'** and a pin depression **214'**. The teeth of each agitator spur gear **210'** mesh with those of a lower spur gear **218'** seated on one of the second bearings **196'**. Each lower spur gear **218'** is fixedly attached to upper spur gears **216'** for rotation therewith. The motor drive shaft **188'** is connected to a drive rod **220'** by a collar **224'**. The drive rod **220'** rotates with the drive shaft **188'** and is equipped with a worm gear **222'** situated between the upper spur gears **216'**. As with conventional worm gear drive arrangements, a commonly known thrust bearing (not shown) positioned between the drive rod **220'** and the motor housing **192'** absorbs lateral loads applied by the worm gear **222'** to the agitator motor **186'**.

[0100] Each of the scrubbing plates **160'** is mounted to the scrubbing support **162'** and mechanically connected to their respective agitator spur gear **210'** by an axle **230'** having upper and lower portions **232'**, **234'**. The upper and lower portions **232'**, **234'** both have square transverse cross-sections sized for receipt within the keyed apertures **212'** in the agitator spur gears **210'** and the keyed longitudinal channels **202'** of the scrubbing plate shafts **200'**, respectively, and the upper portions **232'** are larger than the keyed longitudinal channels **202'**. To mount the scrubbing plates **160'** to the scrubbing support **162'**, the axles **230'** are inserted into the keyed apertures **212'**, through the apertures surrounded by the first bearings **194'** until the lower portions **234'** are received by the keyed longitudinal channels **202'**. Further movement of the axles **230'** is limited by the relative size of the upper portions **232'** relative to the keyed longitudinal channels **202'**. The axles **230'** are secured in place by first pins **236'** that extend through the upper portions **232'** and reside in the pin depressions **214'** and second pins **238'** that extend through the lower portions **234'** and the pinholes **204'**.

[0101] The agitator assembly **96'** further comprises a cover **240'** removably mounted to the gear housing **190'**. The cover **240'** includes, on its lower surface, a set of bearings (not shown) that correspond to the second bearings **196'** for the upper spur gears **216'** and, on its upper surface, upwardly projecting alignment pins **166'** and engagement blocks **170'**. The alignment pins **166'** and the engagement blocks **170'** are

received by the alignment pin apertures **168** and the engagement block apertures **172** in the same manner as described above for the first embodiment agitator assembly **96**. Additionally, the agitator assembly **96'** is biased away from the surface to be cleaned and vertically adjustable in the same fashion as described previously for the first embodiment.

[0102] In operation, the agitator assembly **96'** can be employed during the wet mode of the bare floor cleaner **10** and is lowered to the surface to be cleaned by rotation of the handle assembly **12** to the second position as described previously with respect to the first embodiment. When power is supplied to the agitator motor **186'** either automatically upon rotation of the handle assembly **12** or manually through a switch located on the handle assembly **12** or the foot assembly **23**, the motor shaft **188'** rotates, which induces rotation of the collar **224'** and the drive rod **220'**. As the drive rod **220'** rotates, the worm gear **222'** causes the upper spur gears **216'** to rotate in opposite directions. The lower spur gears **218'** rotate with the upper spur gears **216'** and induce rotation of the agitator spur gears **210'** in opposite directions. Because the axles **230'** are keyed, the agitator spur gears **210'** drive the scrubbing plates **160'** such that the scrubbing plates **160'** rotate in opposite directions relative to one another and agitate the surface to be cleaned.

[0103] Alternatively, the agitator assembly **96'** can be adapted such that the scrubbing plates **160'** rotate in the same direction. Further, each scrubbing plate **160'** can have its own agitator motor **186'**, or the agitator motor **186'** can be offset to one side of the scrubbing support **162'** to drive one of the scrubbing plates **160'**, which, in turn, can drive the other scrubbing plate **160'** through a series of gears or belts. Optionally, the agitator assembly **96'** can comprise only one scrubbing plate **160'** or a plurality of scrubbing plates **160'**. In an alternative embodiment, the scrubbing plate **160'** can comprise individual circulate plates at each lobe that can rotate independent of the scrubbing plate **160'**. The individual circular plates can be geared to the scrubbing plates **160'** in a planetary gear fashion so that they are driven as the scrubbing plates **160'** rotate. Alternatively, the individual circular plates can be pinned to the scrubbing plates **160'** and can rotate freely as the scrubbing plates **160'** rotate. Further, the scrubbing plate **160'** can comprise any suitable number of lobes and is not limited to the three lobes shown in FIGS. **20** and **21**.

[0104] Various modifications can be made to the agitator assembly **96'** without departing from the scope of the invention. For example, to mount the scrubbing plates **160'** to agitator gear **210'** or a drive shaft, the scrubbing plates **160'** can snap fit into a collar connected to the agitator gear **210'** or the drive shaft to from a connection much similar to a connection between a beater and a conventional hand mixer. Such a mechanism can comprise a groove on the upstanding shaft **200'** that engages with a spring ring or similar component in a receiving portion of the agitator gear **200'** or the drive shaft. Additionally, the scrubbing plates **160'** can be vertically displaced relative to the foot assembly **14'** by a pivoting mechanism controlled manually or by rotation of the handle assembly **12**. Further, while the preferred embodiment of the agitator assembly **96'** has been described as comprising a vertical axis rotatable brush, it is within the scope of the invention to utilize commonly known movable brushes such as horizontally oriented brush rolls, reciprocating pads, or orbital motion devices.

[0105] An alternative foot assembly **14"** for the bare floor cleaner is illustrated in FIGS. **23** and **24**, where components similar to those of the previous embodiments are labeled with the same reference numeral bearing a double prime (") symbol. The foot assembly **14"** is similar to the first embodiment foot assembly **14**, except that the present embodiment comprises a fixed wet nozzle assembly **90"**, and the vertical position of the agitator assembly **96"** is adjusted manually by the user with a manually operated pedal **250"** that extends through the top enclosure **86"**.

[0106] The pedal **250"** is fixedly attached to a shaft **252"** having a cam arm **254"** disposed on each end thereof. The shaft **252"** extends through and can rotate independent of and relative to the handle pivot **98"**. The shaft **252"** rests on a pair of shaft supports **256"** located on an upper surface of the foot assembly frame **88"**, and the cam arms **254"** abut the engagement blocks **170"** that project through the engagement block apertures **172"** in the frame **88"**. As in the previous embodiments, the agitator assembly **96"** is biased towards the frame **88"** by the springs **118"** that surround the alignment pins **166"** between the retainers **120"** and the frame **88"**. When the user depresses the pedal **250"** with a foot or a hand, the pedal **250"** pivots and thereby rotates the shaft **252"** and the cam arms **254"** towards the frame **88"**. As a result, the cam arms **254"** apply a downward force to the engagement blocks **170"** to move the agitator assembly **96"** towards the surface to be cleaned. The foot assembly **14"** can further comprise a detent system (not shown) for retaining the pedal in the depressed condition until released by the user.

[0107] The invention has been disclosed with respect to a bare floor cleaner with two different types of agitator. The term "agitator" is used herein in a broad sense to mean any type of implement that will scrub a bare floor and can include brushes, either stationary or movable with respect to a base, fibrous or cloth pads, sponges and the like. While the invention has been specifically described in connection with certain specific embodiments thereof, it is to be understood that this is by way of illustration and not of limitation. Reasonable variation and combination are possible with the scope of the foregoing disclosure without departing from the spirit of the invention, which is defined in the appended claims.

1. A wet/dry bare floor cleaner comprising:
a base;
a handle pivotally connected to the base;
a recovery system comprising:
a wet suction nozzle;
a dry suction nozzle;
a recovery tank for receiving wet and dry debris;
a working air conduit extending from each of the dry suction nozzle and the wet suction nozzle to the recovery tank;
a motor/fan assembly mounted to one of the handle and the base and adapted to create a working air flow in the working air conduit from at least one of the dry suction nozzle and the wet nozzle and to the recovery tank;
a diverter mounted in the working air conduit and movable between a dry suction position and a wet suction position for selectively at least partially blocking working air flow from the wet suction nozzle and the dry suction nozzle, respectively, to the recovery tank; and
an actuator mounted to the handle and connected to the diverter to move the diverter between the dry suction position and the wet suction position.

2. The wet/dry bare floor cleaner according to claim **1** wherein the actuator includes a connector between the handle and the diverter so that the diverter moves between the dry suction position and the wet suction position as the handle rotates between a dry suction position and a wet suction position.

3. The wet/dry bare floor cleaner according to claim **2** wherein when the handle is in the dry suction position, the handle is pivoted towards the wet suction nozzle.

4. The wet/dry bare floor cleaner according to claim **3** wherein when the handle is in the wet suction position, the handle is pivoted towards the dry suction nozzle.

5. The wet/dry bare floor cleaner according to claim **4**, wherein the base has opposite end portions, and the dry suction nozzle and the wet suction nozzle are respectively positioned at the opposite end portions of the base.

6. The wet/dry bare floor cleaner according to claim **2** wherein when the handle is in the wet suction position, it overlies one end of the base, and when it is in the dry suction position, it overlies another end of the base.

7. The wet/dry bare floor cleaner according to claim **2** wherein when the handle is in the wet suction position, the handle is pivoted towards the dry suction nozzle.

8. The wet/dry bare floor cleaner according to claim **2**, wherein the diverter comprises a cylindrical barrel with an inlet at one side wall portion and an outlet at another side wall portion.

9. The wet/dry bare floor cleaner according to claim **8**, wherein the diverter includes a conduit forming the outlet of the cylindrical barrel, and the handle is mounted to the conduit.

10. The wet/dry bare floor cleaner according to claim **9**, wherein the conduit forms the connector between the handle and the diverter.

11. The wet/dry bare floor cleaner according to claim **8**, wherein the cylindrical barrel is pivotally mounted in the base.

12. The wet/dry bare floor cleaner according to claim **2** and further comprising an agitator mounted to the base for vertical movement between a lowered position in contact with the surface to be cleaned and a raised position above the surface to be cleaned for selectively agitating the surface to be cleaned.

13. The wet/dry bare floor cleaner according to claim **12** and further comprising a connector between the agitator and the diverter for moving the agitator between the lowered position and the raised position as the diverter moves between the wet suction position and the dry suction position.

14. The wet/dry bare floor cleaner according to claim **1** and further comprising an agitator mounted to the base for vertical movement between a lowered position in contact with the surface to be cleaned and a raised position above the surface to be cleaned for selectively agitating the surface to be cleaned.

15. The wet/dry bare floor cleaner according to claim **14** and further comprising a connector between the agitator and the diverter for moving the agitator between the lowered and raised positions.

16. The wet/dry bare floor cleaner according to claim **15**, wherein the agitator is a brush that is movably mounted to the base for scrubbing the surface to be cleaned.

17. The wet/dry bare floor cleaner according to claim **16** wherein the brush is mounted to the base for rotation about a vertical axis; and further comprising a motor for driving rotational movement of the brush with respect to the base.

18. The wet/dry bare floor cleaner according to claim **14**, wherein the agitator is a brush comprising a first set of bristles and a second set of bristles wherein the first bristles are longer than the second bristles and are softer than the second bristles.

19. The wet/dry bare floor cleaner according to claim **18**, wherein the first and second sets of bristles are in alternating juxtaposed rows in the brush.

20. The wet/dry bare floor cleaner according to claim **1** and further comprising a fluid delivery system including:

a fluid tank;

a fluid distributor for dispensing fluid onto a surface to be cleaned; and

a fluid distribution conduit between the fluid tank and the fluid distributor.

21. A wet/dry bare floor cleaner comprising:

a base;

a handle pivotally connected to the base;

a recovery system comprising:

a wet suction nozzle;

a dry suction nozzle;

a recovery tank for receiving wet and dry debris;

a working air conduit extending from each of the dry suction nozzle and the wet suction nozzle to the recovery tank;

a motor/fan assembly mounted to one of the handle and the base and adapted to create a working air flow in the working air conduit from at least one of the dry suction nozzle and the wet nozzle and to the recovery tank;

a diverter mounted in the working air conduit and movable between a dry suction position and a wet suction position for selectively at least partially blocking working air flow from the wet suction nozzle and the dry suction nozzle, respectively, to the recovery tank; and

an agitator mounted to the base for vertical movement between a lowered position in contact with the surface to be cleaned and a raised position above the surface to be cleaned for selectively agitating the surface to be cleaned.

22. The wet/dry bare floor cleaner according to claim **21** and further comprising a connector between the agitator and the diverter for moving the agitator between the lowered and raised positions.

23. The wet/dry bare floor cleaner according to claim **21** wherein the agitator is a brush that is movably mounted to the base for agitating the surface to be cleaned.

24. The wet/dry bare floor cleaner according to claim **21** wherein the agitator is a brush comprising a first set of bristles and a second set of bristles wherein the first bristles are longer than the second bristles and are softer than the second bristles.

25. The wet/dry bare floor cleaner according to claim **24** wherein the first and second sets of bristles are in alternating juxtaposed rows in the brush.

26. The wet/dry bare floor cleaner according to claim **21** and further comprising:

a fluid delivery system comprising:

a fluid tank;

a fluid distributor for dispensing fluid onto a surface to be cleaned; and

a fluid distribution conduit between the fluid tank and the fluid distributor.

27. A wet/dry bare floor cleaner comprising:
a base;
a handle pivotally connected to the base for movement between a first position forward of a vertical position and a second position rearward of the vertical position;
a recovery system comprising:
a wet suction nozzle;
a dry suction nozzle;
a recovery tank for receiving wet and dry debris;
a working air conduit extending from each of the dry suction nozzle and the wet suction nozzle to the recovery tank;
a diverter mounted in the working air conduit and movable between a dry suction position and a wet suction position for selectively at least partially blocking working air flow from the wet suction nozzle and the dry suction nozzle, respectively, to the recovery tank; and
a motor/fan assembly mounted to one of the handle and the base and adapted to create a working air flow in the working air conduit from at least one of the dry suction nozzle and the wet nozzle and to the recovery tank; and
a shut-off valve mounted in the recovery tank and adapted to prevent fluid communication between the motor/fan assembly and the recovery tank when the amount of liquid in the recovery tank reaches a first predetermined amount when the handle is in the first position and a second predetermined amount different than the first predetermined amount when the handle is in the second position.

28. The wet/dry bare floor cleaner according to claim **27** wherein the recovery tank comprises an outlet, and the shut-off valve comprises a float adapted to close the outlet when the amount of liquid in the recovery tank reaches the first predetermined amount when the handle is in the first position and the second predetermined amount when the handle is in the second position.

29. The wet/dry bare floor cleaner according to claim **28** wherein the float is offset from a longitudinal axis of the recovery tank so that the float is below the longitudinal axis when the handle is in the first position and above the longitudinal axis when the handle is in the second position.

30. The wet/dry bare floor cleaner according to claim **27** and further comprising an actuator connected to the handle and the diverter and adapted to move the diverter between the dry suction position and the wet suction position as the handle rotates between the first position and the second position, respectively.

31. The wet/dry bare floor cleaner according to claim **27** wherein the first amount of liquid is less than the second amount of liquid.

32. The wet/dry bare floor cleaner according to claim **27** and further comprising a fluid delivery system comprising:
a fluid tank;
a fluid distributor for dispensing fluid onto a surface to be cleaned; and
a fluid distribution conduit between the fluid tank and the fluid distributor.

33. A wet/dry bare floor cleaner comprising:
a base;
a recovery system comprising:
a wet suction nozzle;
a dry suction nozzle;
a recovery tank for receiving wet and dry debris;
a working air conduit extending from each of the dry suction nozzle and the wet suction nozzle to the recovery tank;
a diverter mounted in the working air conduit and movable between a dry suction position and a wet suction position for selectively at least partially blocking working air flow from the wet suction nozzle and the dry suction nozzle, respectively, to the recovery tank; and
a motor/fan assembly mounted to one of the handle and the base and adapted to create a working air flow in the working air conduit from at least one of the dry suction nozzle and the wet nozzle and to the recovery tank; and
a handle pivotally connected to the base movement between a dry suction position and a wet suction position;
the handle including
a bi-directional grip having a first portion adapted to be conveniently gripped by a hand of the user when the handle is in the dry suction position and a second portion which is adapted to be conveniently gripped by the hand of the user in substantially the same relative position when the handle is in the wet suction position.

34. The wet/dry bare floor cleaner according to claim **33** wherein the first portion extends away from the handle in one direction, and the second portion extends away from the handle in an opposite direction.

35. The wet/dry bare floor cleaner according to claim **34** wherein the first portion and the second portion are bilaterally symmetric.

36. The wet/dry bare floor cleaner according to claim **33** and further comprising a fluid delivery system comprising:
a fluid tank;
a fluid distributor for dispensing fluid onto a surface to be cleaned; and
a fluid distribution conduit between the fluid tank and the fluid distributor.

37. The wet/dry bare floor cleaner according to claim **36** and further comprising a trigger mounted to one of the first and second portions and connected to the fluid distribution system to distribute fluid to the surface to be cleaned.

38. The wet/dry bare floor cleaner according to claim **33** wherein the base has opposite end portions, and the dry suction nozzle and the wet suction nozzle are respectively positioned at the opposite end portions of the base.

39. The wet/dry bare floor cleaner according to claim **38** wherein when the handle is in the wet suction position, it overlies one end of the base, and when it is in the dry suction position, it overlies the opposite end of the base.

* * * * *