United States Patent [19]

Chapin

[11] **Patent Number: 5,038,985**

[45] **Date of Patent: Aug. 13, 1991**

[54] **ADJUSTABLE TAPE MEASURE CLIP**

[75] Inventor: **David S. Chapin**, Raleigh, N.C.

[73] Assignee: **Cooper Industries**, Houston, Tex.

[21] Appl. No.: **410,454**

[22] Filed: **Sep. 21, 1989**

Related U.S. Application Data

[62] Division of Ser. No. 235,665, Aug. 24, 1988, Pat. No. 4,897,892.

[51] **Int. Cl.**[5] **A45F 5/02**

[52] **U.S. Cl.** **224/252**; 224/904; 224/253; 24/3.005; 33/768; 33/770

[58] **Field of Search** ..... 24/3 J, 3 L, 3 R; 224/904, 252, 253, 269; 33/768, 770

[56] **References Cited**

U.S. PATENT DOCUMENTS

D. 216,534	2/1970	Zelnick et al.	D 52/1
D. 289,742	5/1987	Blakely et al.	D 10/72
793,162	6/1905	Schmidt	24/3 J
1,102,922	7/1914	Hoffman .	
1,154,371	9/1915	Burke	24/3 J
1,692,712	11/1928	Tannebaum	24/3 J
1,702,283	2/1929	Sunvold .	
1,931,138	10/1933	Staff	24/11
1,972,434	9/1934	Yerk	24/3 J
2,345,051	3/1944	Jensen	24/3 J
2,563,749	8/1951	Rose et al.	24/3 J
3,523,397	8/1970	Carey et al. .	
3,907,182	9/1975	Bryant	224/252
4,111,343	9/1978	Selinko	224/252
4,190,955	3/1980	Rushforth	30/366
4,527,334	7/1985	Jones et al.	33/138
4,536,925	8/1985	Boothe et al.	24/511
4,619,020	10/1986	Lechor, Sr.	224/252 X
4,754,528	7/1988	Lyons et al.	24/3 L
4,897,898	2/1990	Chapin	24/3 J

FOREIGN PATENT DOCUMENTS

328535	10/1920	Fed. Rep. of Germany .
196681	4/1928	United Kingdom .
769044	2/1957	United Kingdom .

Primary Examiner—Ernest G. Cusick
Attorney, Agent, or Firm—David A. Rose; Ned L. Conley; Jeffrey W. Tayon

[57] **ABSTRACT**

The adjustable tape measure clip includes a strip of spring steel folded over to form a primary spring with opposing leaves, the inner leaf being adapted for attachment to the case of the tape measure. The inner leaf includes a secondary spring for adjusting the spring force of the primary spring on the leaves of the clip. A mounting screw, which mounts the spring clip onto the case of the tape measure, also engages the secondary spring on the inner leaf to adjust the secondary spring force on the primary spring. As the screw is rotated, the secondary spring varies the primary spring force and thus adjusts the free clip width between the leaves to either increase or decrease the gripping pressure of the clip on the user's apparel.

3 Claims, 9 Drawing Sheets

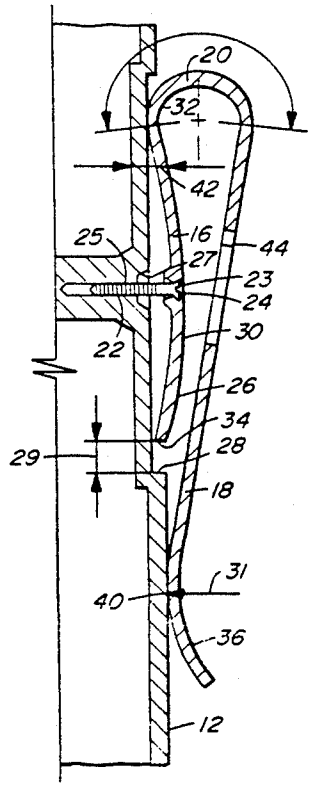

RIDGE EXHIBIT 2005
2985, LLC. v. The Ridge Wallet LLC
IPR2024-00692

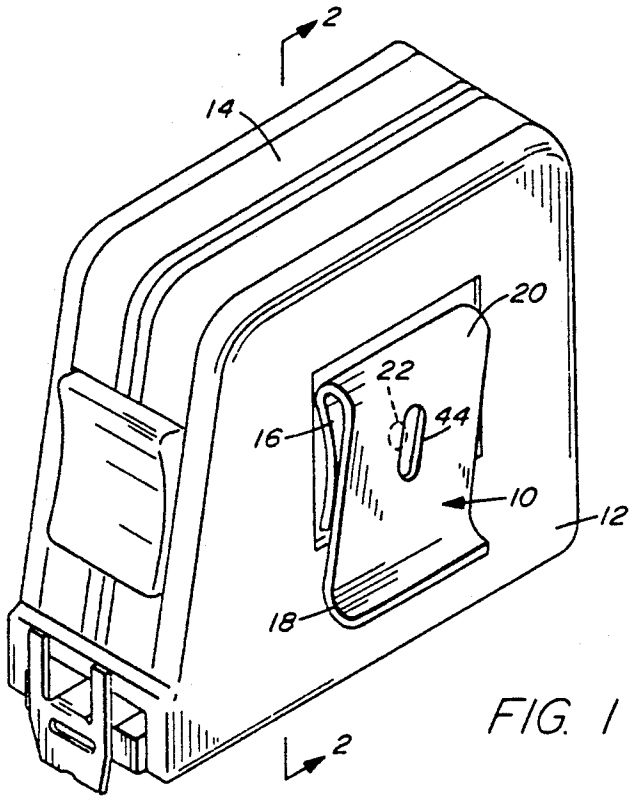

FIG. 1

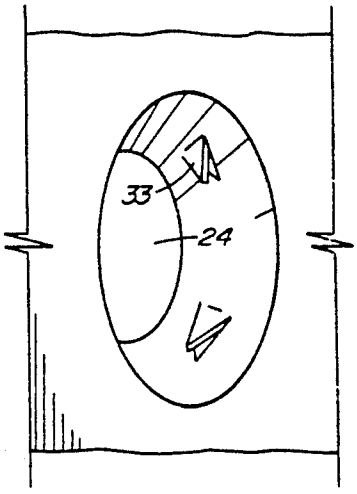

FIG. 3

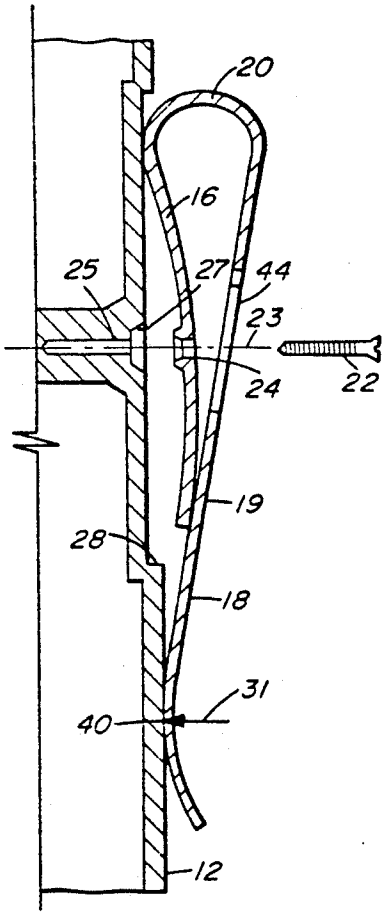

FIG. 2A

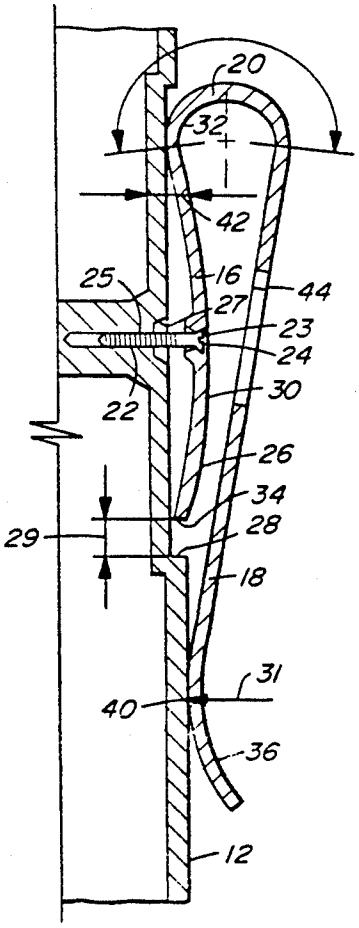

FIG. 2B

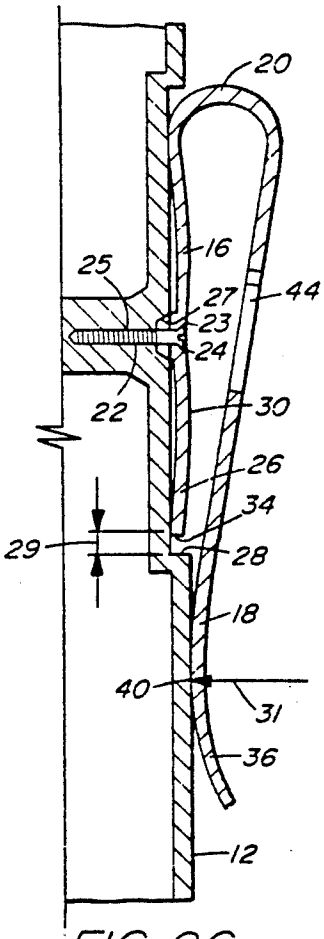

FIG. 2C

RIDGE EXHIBIT 2005
2985, LLC. v. The Ridge Wallet LLC
IPR2024-00692

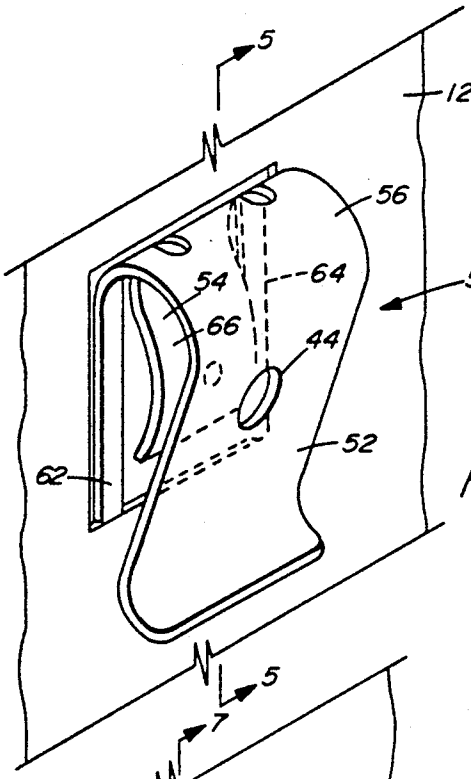

FIG. 4

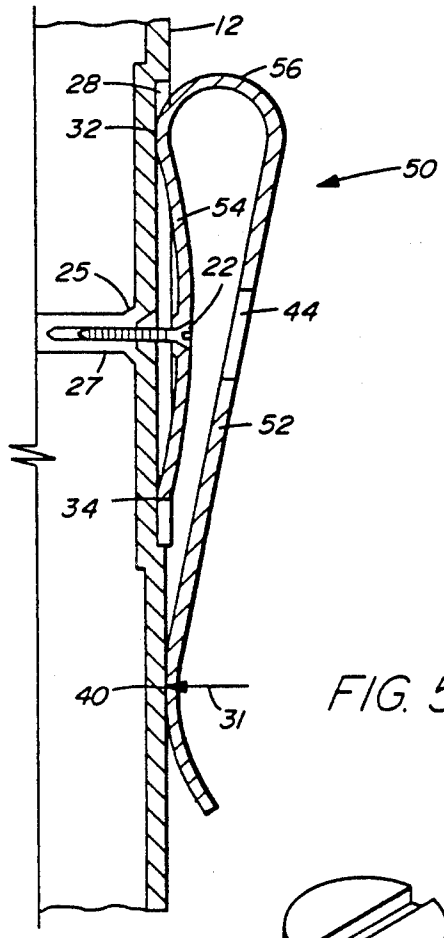

FIG. 5

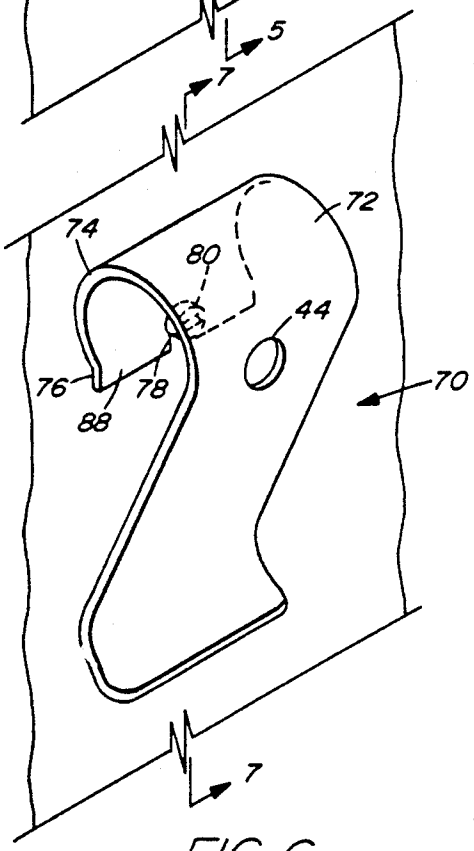

FIG. 6

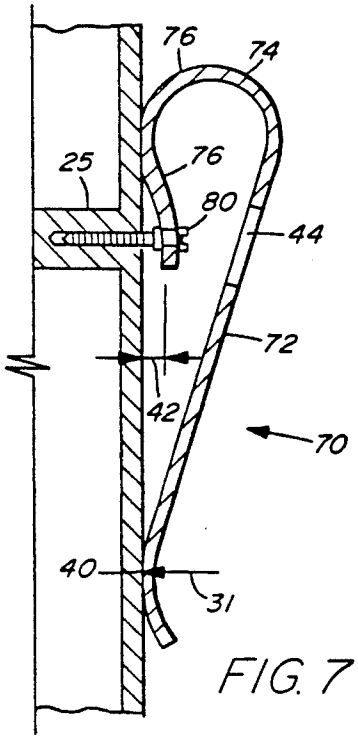

FIG. 7

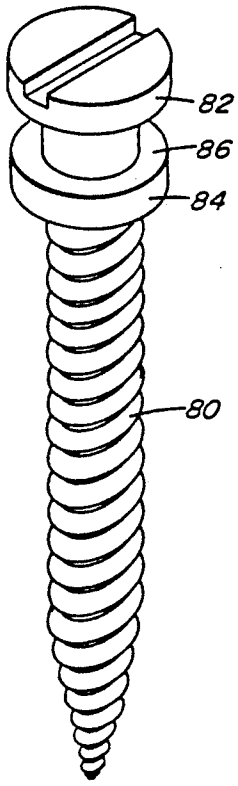

FIG. 8

RIDGE EXHIBIT 2005
2985, LLC. v. The Ridge Wallet LLC
IPR2024-00692

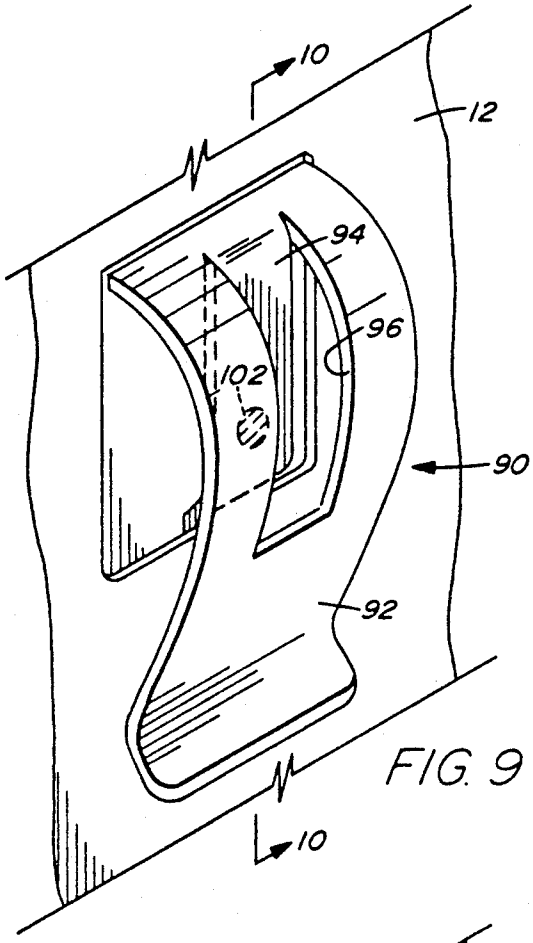

FIG. 9

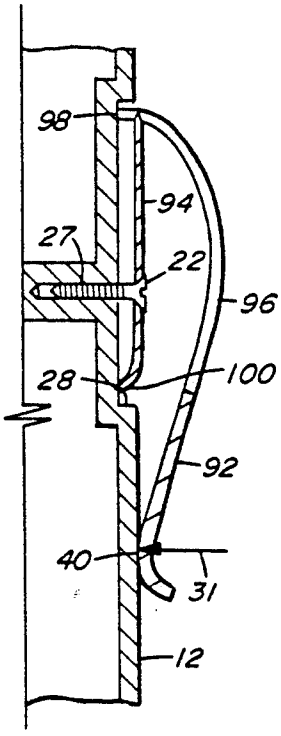

FIG. 10

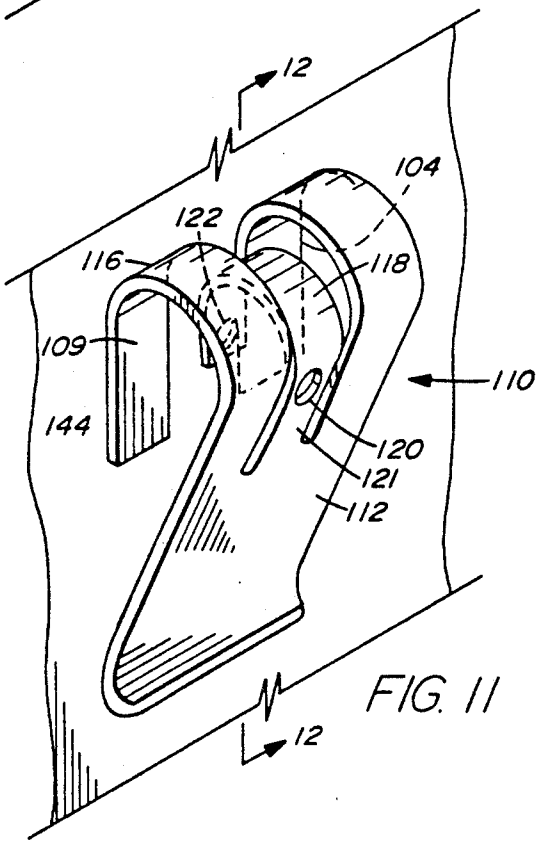

FIG. 11

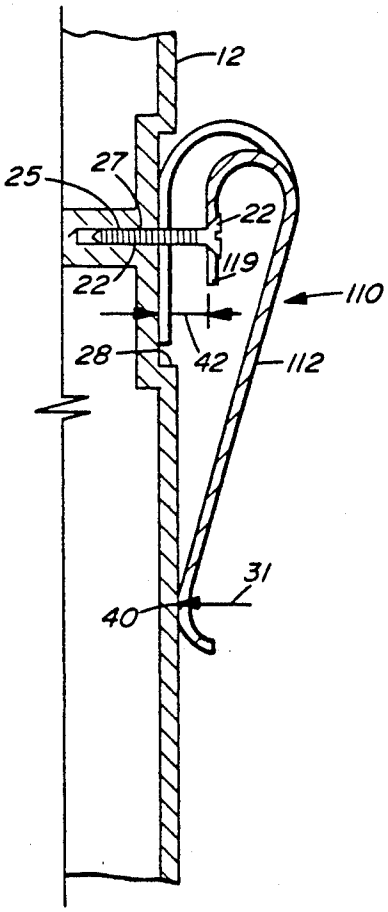

FIG. 12

RIDGE EXHIBIT 2005
2985, LLC. v. The Ridge Wallet LLC
IPR2024-00692

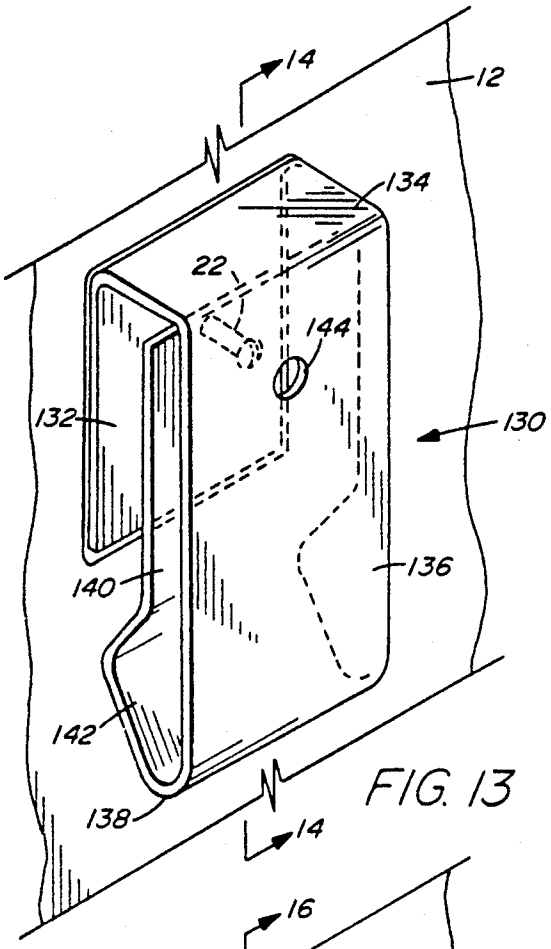

FIG. 13

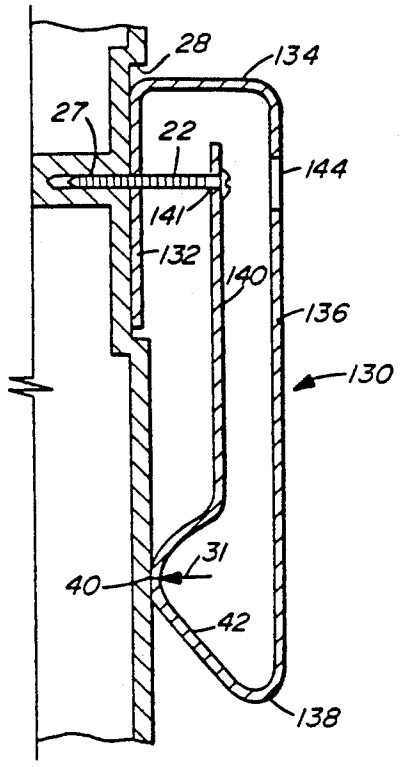

FIG. 14

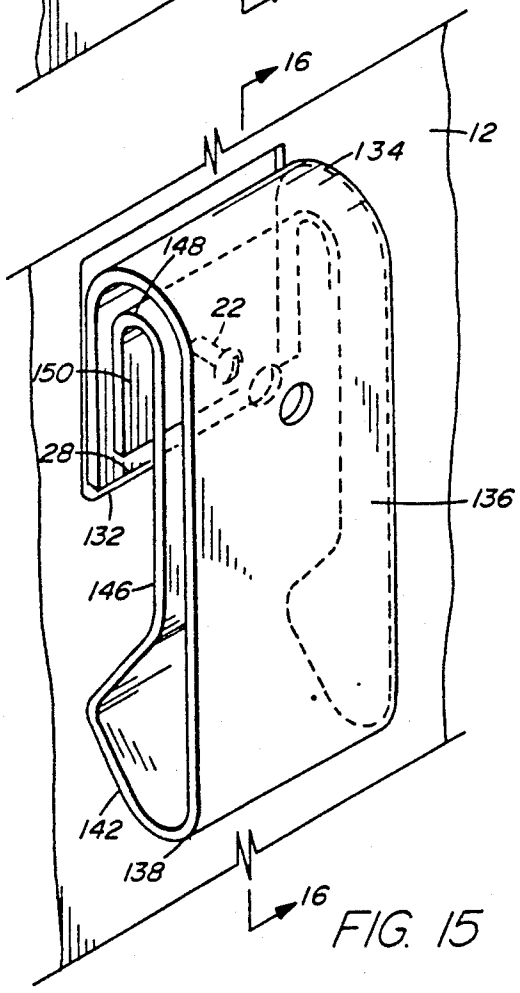

FIG. 15

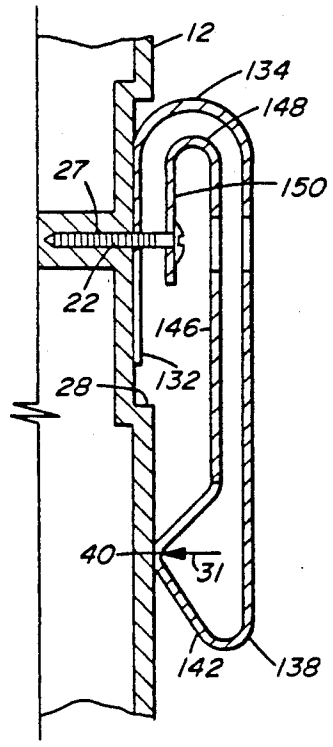

FIG. 16

RIDGE EXHIBIT 2005
2985, LLC. v. The Ridge Wallet LLC
IPR2024-00692

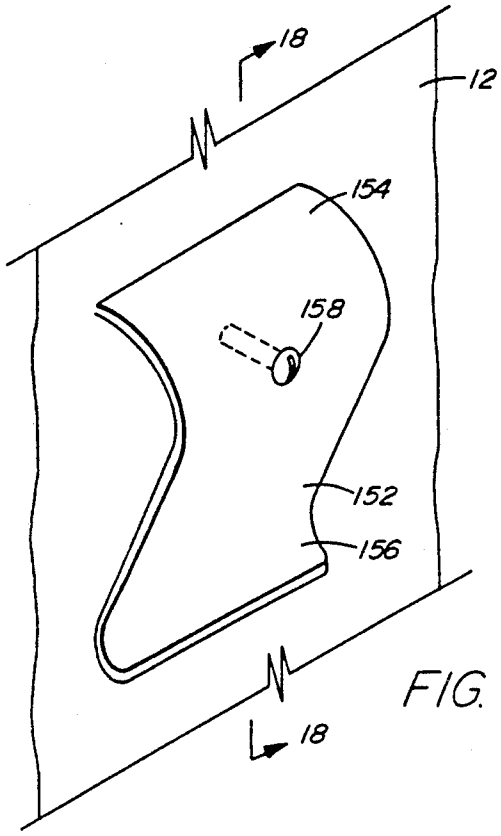

FIG. 17

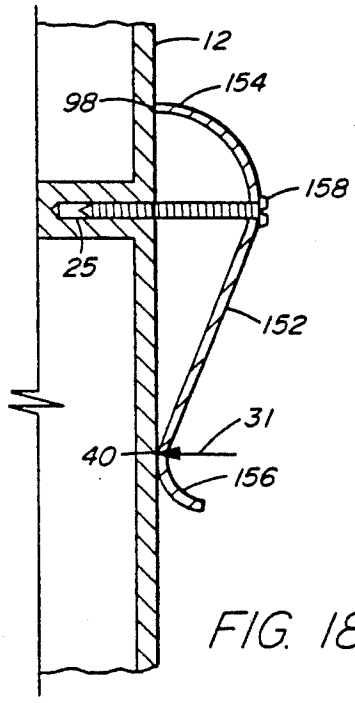

FIG. 18

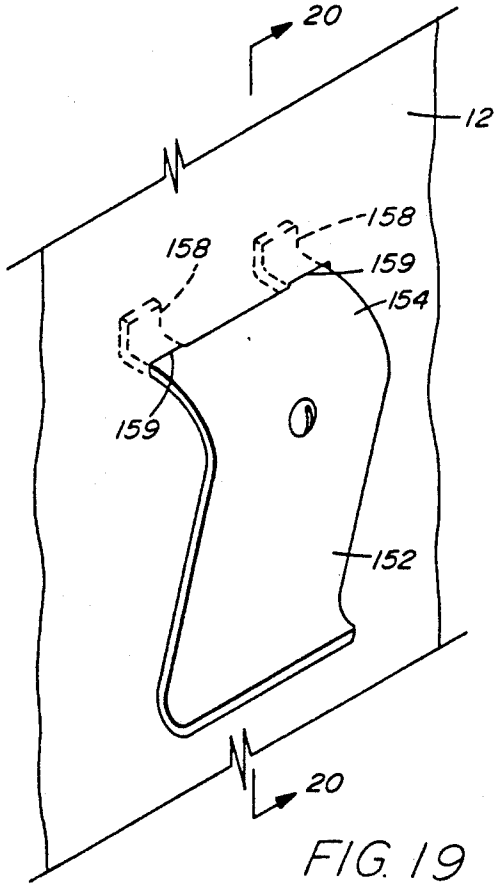

FIG. 19

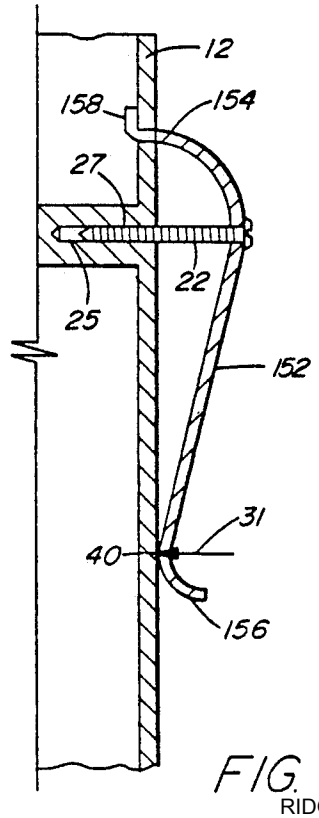

FIG. 20

RIDGE EXHIBIT 2005
2985, LLC. v. The Ridge Wallet LLC
IPR2024-00692

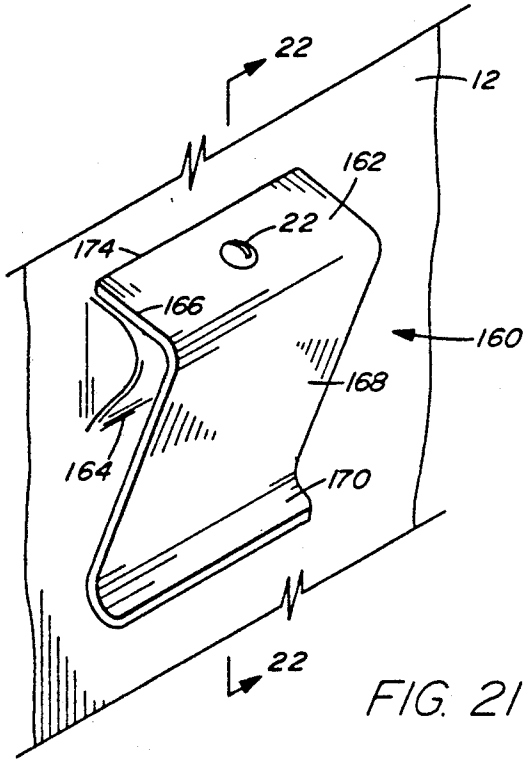

FIG. 21

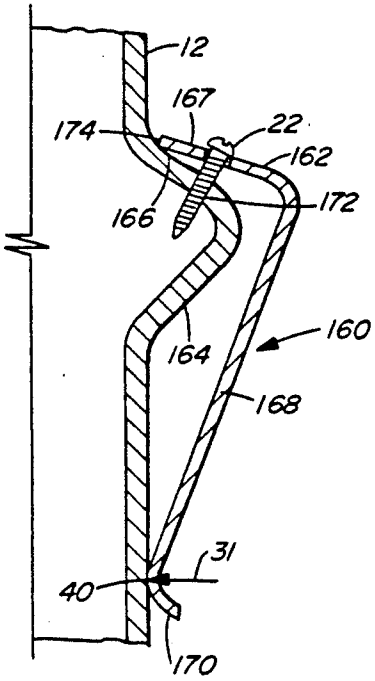

FIG. 22

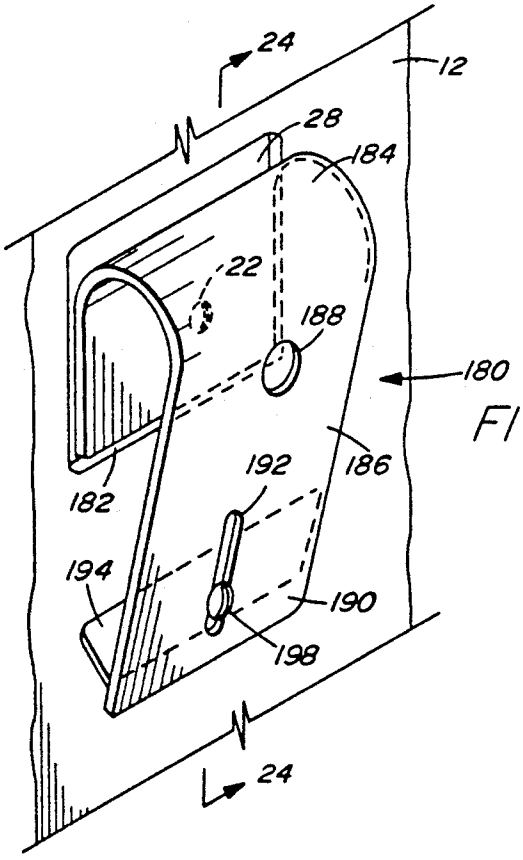

FIG. 23

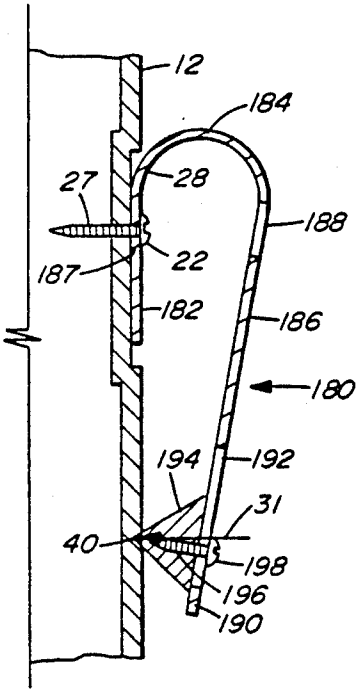

FIG. 24

RIDGE EXHIBIT 2005
2985, LLC. v. The Ridge Wallet LLC
IPR2024-00692

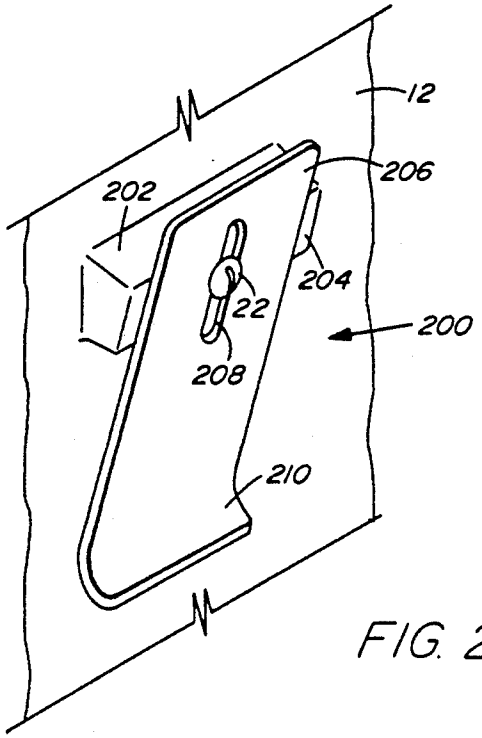

FIG. 25

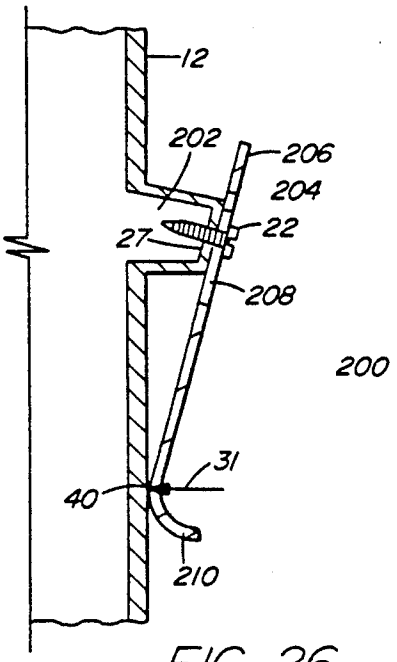

FIG. 26

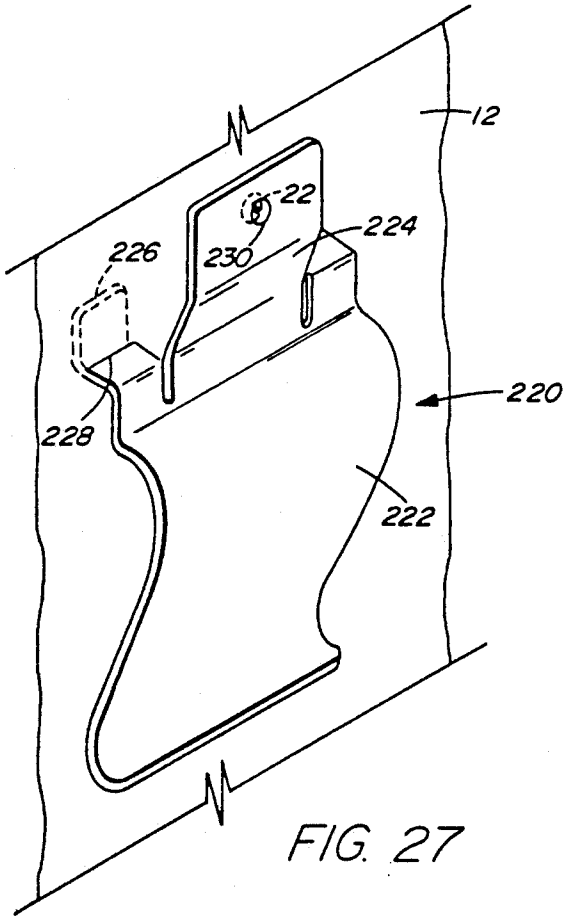

FIG. 27

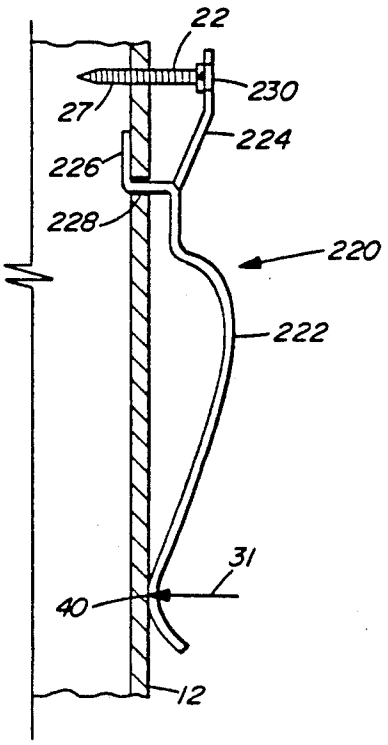

FIG. 28

RIDGE EXHIBIT 2005
2985, LLC. v. The Ridge Wallet LLC
IPR2024-00692

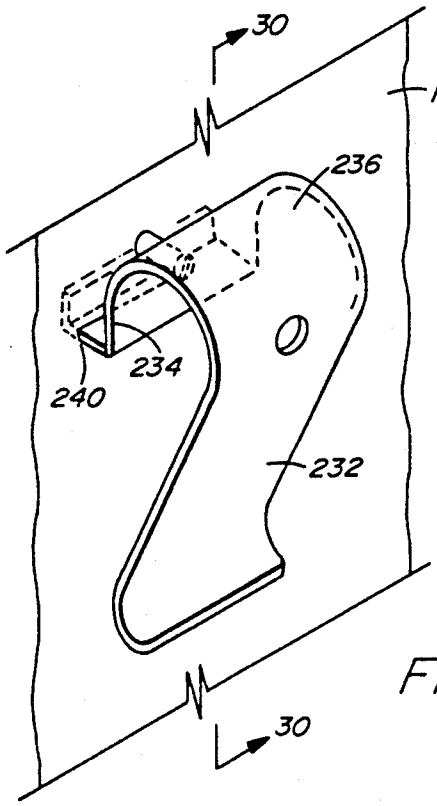

FIG. 29

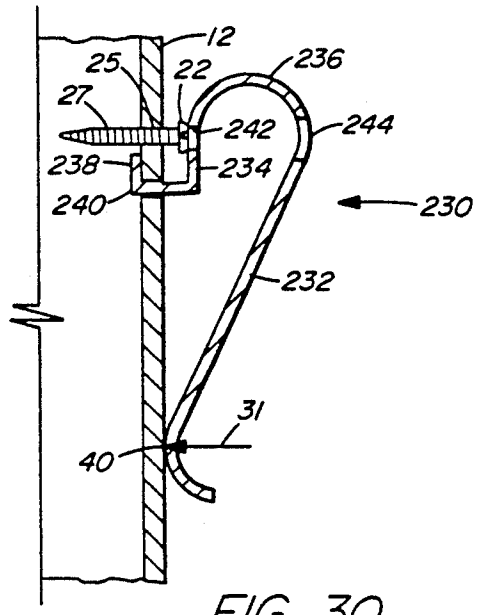

FIG. 30

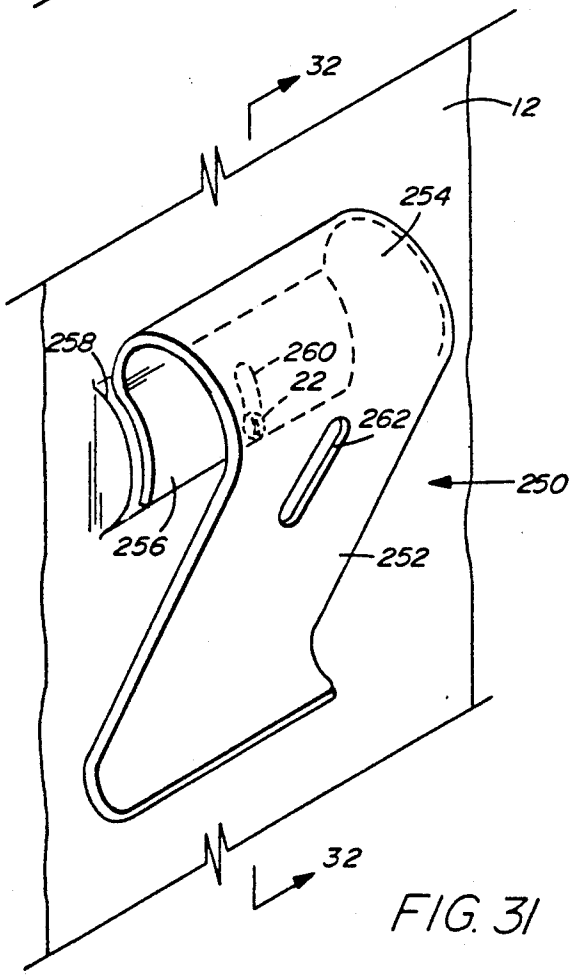

FIG. 31

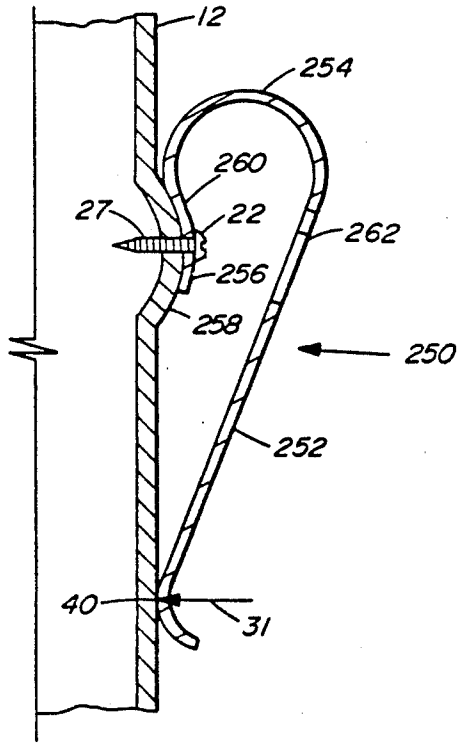

FIG. 32

RIDGE EXHIBIT 2005
2985, LLC. v. The Ridge Wallet LLC
IPR2024-00692

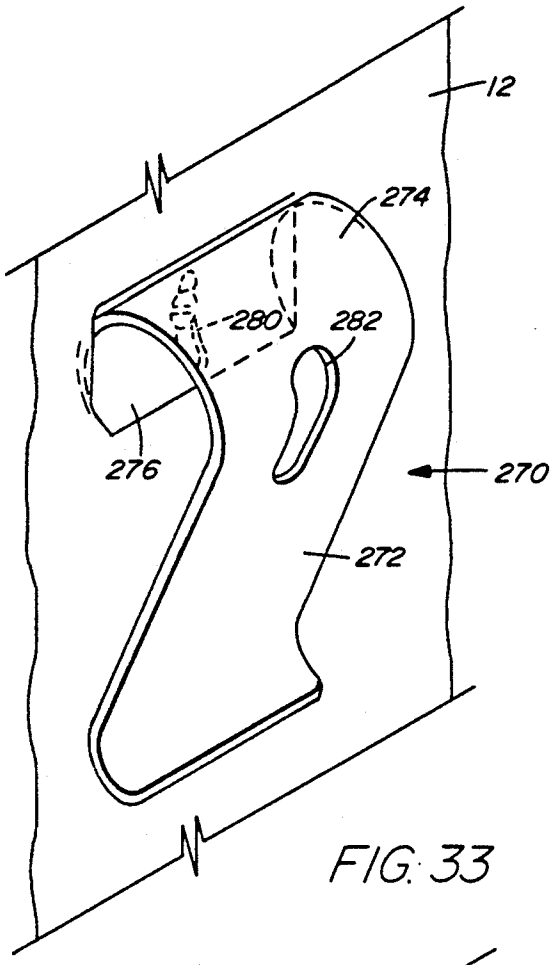

FIG. 33

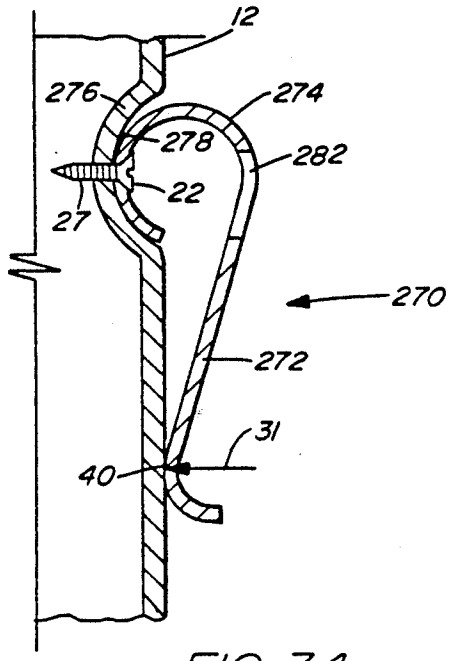

FIG. 34

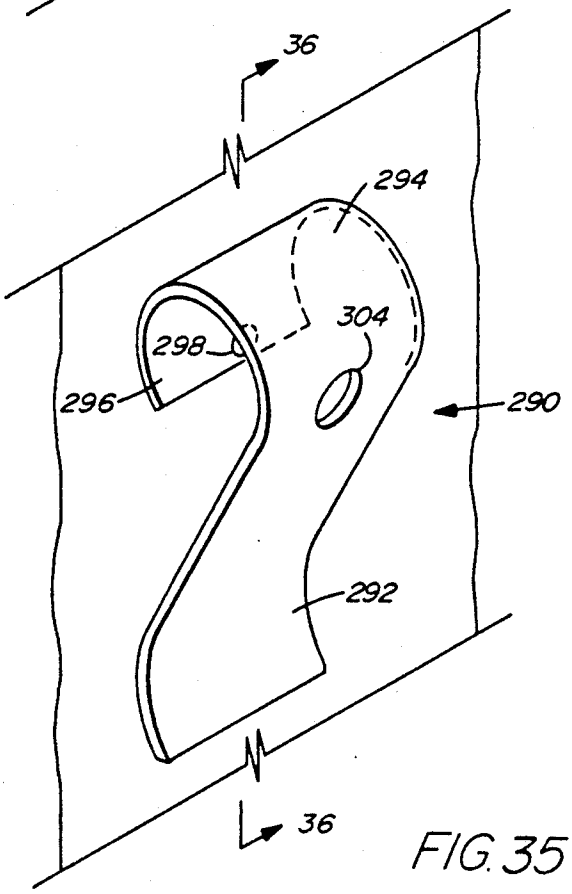

FIG. 35

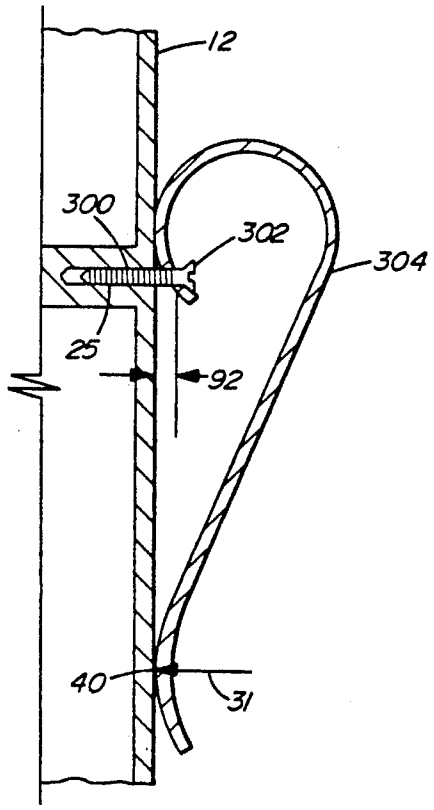

FIG. 36

RIDGE EXHIBIT 2005
2985, LLC. v. The Ridge Wallet LLC
IPR2024-00692

ADJUSTABLE TAPE MEASURE CLIP

IN THE RELATED APPLICATION

This is a divisional of my application Ser. No. 07/235,665, filed Aug. 24, 1988 now U.S. Pat. No. 4,897,892. Priority to that earlier filing date is claimed.

BACKGROUND OF THE INVENTION

This invention relates to the mounting of a tape measure to the user's apparel and, more particularly, to an adjustable mounting clip for a tape measure.

It is well known to use clips to releasably attach small tools, such as tape measures, to the user's apparel. Tape measures are commonly carried on the user's belt or clothing by means of a spring clip affixed to the tape measure.

The typical prior art mounting clip for a tape measure includes a strip of spring steel, typically one-half to one and one-half inches wide, which has been folded over into a U-shape to form inner and outer leaves. The fold or bend of the spring steel strip, together with the leaves, acts as a spring. The free end of the outer leaf is positioned to contact at a surface, i.e., the contact surface, on either the inner leaf or the side of the tape measure case. In many prior art devices, the outer leaf is longer than the inner leaf, and contacts the side of the tape measure case. The inner leaf of the clip is mounted to one side of the case of the tape measure and is often recessed into the side of the case to prevent the edge of the inner leaf from engaging the edge of the user's apparel as the clip receives the user's apparel. The outer leaf includes an access aperture to permit the passage and engagement of a screw which secures the inner leaf and, thus, the clip, to the case of the tape measure. The outer leaf includes a flared end to facilitate the placement of the clip over the user's apparel. The open end of the spring clip receives the edge of the user's apparel, such as a belt or the edge of the user's pockets or pants. As the spring clip receives the edge of the apparel, the inner and outer leaves are separated. The separation of the clip leaves creates spring tension at the fold of the clip and in the spring steel of the inner and outer leaves, causing the two leaves to grip the user's apparel. The curved portion of the clip and the spring steel of the leaves act as springs tending to force the outer leaf of the clip back into contact with the contact surface, due to the deformation of the leaves caused by the insertion of the user's apparel.

The contact pressure at the contact surface of the outer leaf is caused by effective over-energization of the fold of the clip. The fold of the clip acts as a spring, which tends to force the outer leaf into contact with the contact surface. If the fold was formed such that the inner and outer leaves were separated at rest, i.e., where no pressure or force is applied by the outer leaf to the contact surface, then the spring at the fold would be at equilibrium in the free state of the clip. However, because the clip is over-energized, i.e.,.the free state required for the spring to be at equilibrium would require the outer leaf to travel through the contact surface, the spring is constantly energized at the contact surface.

One of the principal disadvantages of the prior art clips is that the force, or contact pressure, which exists where the outer leaf contacts the contact surface, cannot be adjusted. Although it may be possible in certain prior art clips to bend the clip leaves so as to decrease this pressure, most clips are made from spring steels

which prevent the easy bending of the clip so as to adjust the contact pressure. Where the contact pressure is too great, it is difficult for the user to slip the clip over the belt. On the other hand, if the contact pressure is inadequate, the clip will not adequately grip the belt, thus permitting the tape measure to fall off of the belt if the user, for example, were to bend over. Large adjustments of the contact pressure, which are facilitated by bending the clip outer leaf away from the inner leaf, will cause permanent deformation, thus leading to detrimental gripping performance and possible clip failure from metal fatigue. Further, it is extremely difficult to increase the contact pressure of a prior art clip, because the outer leaf cannot be effectively deformed inwardly toward the inner leaf by the clip user. Also, the repeated use of the clip tends to lead to fatigue, causing the spring pressure to lessen.

It is an object of the present invention to overcome the deficiencies of the prior art and provide an easily adjustable mounting clip. The present invention provides easy adjustment means to permit the user to adjust the tension of the mounting clip to meet the needs of the user.

Other objects and advantages will appear from the following description.

SUMMARY OF THE INVENTION

The adjustable tape measure clip of the present invention includes a strip of spring steel mounted on a tape measure case capable of adjusting the contact pressure of the outer leaf with the contact surface of the inner leaf or case. In the preferred embodiment, the adjustable tape measure clip includes a strip of spring steel folded over to form a primary spring of opposed inner and outer leaves formed by the folding action. The outer leaf meets at a contact surface on the case, where the spring force of the primary spring creates a contact pressure between the outer leaf and contact surface. The inner leaf is adapted for attachment to the case, and includes a secondary spring which adjusts the contact pressure between the outer leaf and contact surface by further energizing the primary spring. A mounting screw for mounting the spring clip to the case of the tape measure is employed to engage the secondary spring on the inner leaf. By tightening the screw, the primary spring is further energized, causing the force, or pressure, at the contact surface to increase thereby increasing the gripping pressure on the user's apparel. In alternative embodiments, the clip includes means for adjusting contact pressure without resort to a secondary spring on an inner leaf.

BRIEF DESCRIPTION OF THE DRAWINGS

For a detailed description of preferred embodiment of the invention, reference will now be made to the accompanying drawings wherein:

FIG. **1** is a perspective view of the adjustable mounting clip of the present invention;

FIGS. **2A**, **2B**, and **2C** are section views of the adjustable mounting clip at plane **2—2** of FIG. **1** with varying degrees of the adjustment means of the mounting clip;

FIG. **3** is a partial enlarged view of the aperture for the screw of the adjustable mounting clip of FIG. **1**;

FIG. **4** is a partial perspective view of an alternative embodiment of the adjustable mounting clip of the present invention;

RIDGE EXHIBIT 2005
2985, LLC. v. The Ridge Wallet LLC
IPR2024-00692

FIG. 5 is a section view of the adjustable mounting clip at plane 5—5 of FIG. 4;

FIG. 6 is a partial perspective view of an alternative embodiment of the adjustable mounting clip;

FIG. 7 is a section view of the mounting clip at plane 7—7 of FIG. 6;

FIG. 8 is a perspective view of the screw used with the adjustment means of the embodiment shown in FIG. 6;

FIG. 9 is a partial perspective view of another alternative embodiment of the adjustable mounting clip of the present invention;

FIG. 10 is a section view of the adjustable mounting clip at plane 10—10 of FIG. 9;

FIG. 11 is a partial perspective view of another alternative embodiment of the adjustable mounting clip of the present invention;

FIG. 12 is a section view of the adjustable mounting clip at plane 12—12 of FIG. 11;

FIG. 13 is a partial perspective view of another alternative embodiment of the adjustable mounting clip of the present invention;

FIG. 14 is a section view of the mounting clip at plane 14—14 of FIG. 13;

FIG. 15 is a partial perspective view of another alternative embodiment of the adjustable mounting clip of the present invention;

FIG. 16 is a section view of the adjustable mounting clip at plane 16—16 of FIG. 15;

FIG. 17 is a partial perspective view of another alternative embodiment of the adjustable mounting clip of the present invention;

FIG. 18 is a section view of the adjustable mounting clip at plane 18—18 of FIG. 17;

FIG. 19 is a partial perspective view of another alternative embodiment of the adjustable mounting clip of the present invention;

FIG. 20 is a section view of the adjustable mounting clip at plane 20—20 of FIG. 19;

FIG. 21 is a partial perspective view of another alternative embodiment of the adjustable mounting clip of the present invention;

FIG. 22 is a section view of the adjustable mounting clip at plane 22—22 of FIG. 21;

FIG. 23 is a partial perspective view of another alternative embodiment of the adjustable mounting clip of the present invention;

FIG. 24 is a section view of the adjustable mounting clip at plane 24—24 of FIG. 23;

FIG. 25 is a partial perspective view of another alternative embodiment of the adjustable mounting clip of the present invention;

FIG. 26 is a section view of the adjustable mounting clip at plane 26—26 of FIG. 25;

FIG. 27 is a partial perspective view of another alternative embodiment of the adjustable mounting clip of the present invention;

FIG. 28 is a section view of the adjustable mounting clip at plane 28—28 of FIG. 27;

FIG. 29 is a partial perspective view of an alternative embodiment of the adjustable mounting clip of the present invention;

FIG. 30 is a section view of the adjustable mounting clip at plane 30—30 of FIG. 29;

FIG. 31 is a partial perspective view of another alternative embodiment of the adjustable mounting clip of the present invention;

FIG. 32 is a section view of the adjustable mounting clip at plane 32—32 of FIG. 31;

FIG. 33 is a partial perspective view of another alternative embodiment of the adjustable mounting clip of the present invention;

FIG. 34 is a section view of the adjustable mounting clip at plane 34—34 of FIG. 33;

FIG. 35 is a partial perspective view of another alternative embodiment of the adjustable mounting clip of the present invention; and

FIG. 36 is a section view of the adjustable mounting clip at plane 36—36 of FIG. 35.

The invention may take form in various parts and arrangements of parts. The drawings are for purposes of illustrating preferred and alternative embodiments, and are not to be construed as limiting the invention.

DESCRIPTION OF THE PREFERRED EMBODIMENT

Referring initially to FIG. 1, there is shown an adjustable mounting clip 10 affixed to one side of the case 12 of a tape measure 14. The clip 10 is made from a strip of spring steel which is typically one-half to one and one-half inches wide. The clip 10 is produced by folding over the strip of spring steel to form a generally U-shape. The U-shaped clip 10 includes an inner spring leaf 16, an outer spring leaf 18, and a semicircular portion 20 at the fold of the spring steel strip from which inner and outer leaves 16, 18 extend. The inner and outer leaves 16, 18 are not necessarily of the same width and length. Typically, inner leaf 16 is narrower and shorter than outer leaf 18. Semicircular portion 20, together with leaves 16, 18, create a primary spring means which produces a spring tension between inner and outer leaves 16, 18. When the clip 10 is placed over the user's apparel, such as a belt or pocket, the apparel is received between outer leaf 18 and inner leaf 16 and case 12.

Referring now to FIGS. 2A, B and C, FIG. 2A illustrates the clip 10 prior to attachment to the case 12, where the inner and outer leaves 16, 18 merely touch at 19. In this position the spring tension between leaves 16, 18 is substantially zero. FIG. 2B shows the inner leaf 16 fastened to the side of the case 12 by means of a screw 22. Screw 22 is received through an aperture 24 in inner leaf 16 and threaded into hole 25. Screw 22 is preferably a self-tapping screw, so that hole 25 need not be pretapped for engagement of the screw 22 and accompanying clip 10. As best shown in FIG. 1, external leaf 18 includes an access aperture 44 to permit the insertion of a screwdriver to adjust screw 22. As best shown in FIG. 3, aperture 24 is beveled at 23 such that the head of screw 22 is substantially recessed within aperture 24 so as not to be an obstruction to the edge of the user's apparel as it is received within the clip 10. As best shown in FIG. 3, four equally spaced optional cut-outs forming tabs 33 are spaced around the beveled portion 23 of the aperture 24. The tabs 33 are bent out from the wall of the beveled portion 23 to act as a lockwasher to prevent the screw 22 from backing out of the hole 23. Although it is contemplated that the screw 22 will be held in place by the friction of the threads engaging the hole, tabs 33 may be included to provide an anti-rotation feature. The free end 36 of outer leaf 18 is flared to facilitate the placement of the clip onto the user's apparel.

A portion of inner leaf 16 is received within a recess 28 in the side of case 12. The recess 28 has sufficient

RIDGE EXHIBIT 2005
2985, LLC. v. The Ridge Wallet LLC
IPR2024-00692

depth to fully receive the free terminal end **26** of inner leaf **16** so as not to project away from the surface of case **12** and interfere with the reception of the wearer's apparel into the clip **10**. Further, the recess **28** is longer than the inner leaf **16** to allow room, indicated by the numeral **29**, for the inner leaf **16** to lengthen as it straightens due to the tightening of the screw **22**. Recess **28** also includes a counterbore **27** to receive the beveled portion of leaf **16** forming aperture **24**.

The free end **36** of outer leaf **18** applies a clip or contact pressure **31** against the contact surface **40** of the side of case **12**. The inner leaf **16** is a half-elliptical spring or bow spring **30** which serves as the adjustment means for adjusting the clip pressure **31** of the clip **10**. The apex of the bow of secondary spring **30** preferably occurs at the aperture **24** for screw **22**. The bow of secondary spring **30** includes contact points at **32** and **34** whereby as screw **22** is tightened, the inner leaf **16** bears against the side of case **12** at contact points **32, 34** to increase the spring tension of the primary spring. The distance between the side of case **12** and the apex of the bow of secondary spring **30** is termed the bow distance **42**. As screw **22** is tightened, as shown in FIG. 2C, the bow distance **42** is reduced and the inner leaf **16** is lengthened to reduce the room allowance **29** in recess **28**.

As is shown in FIGS. 2A, 2B, and 2C, the contact pressure **31** increases as the screw **22** is tightened. As the screw **22** is tightened, the inner leaf **16** or secondary spring is energized causing the semicircular portion **20** to rotate thereby energizing the primary spring to force outer leaf **18** to move or rotate against the side of the case **12** at contact surface **40** to increase the gripping pressure or contact pressure **31**. A small reduction in the bow distance **42** will increase the contact pressure **31** dramatically.

In operation, the user's apparel, such as the belt, is inserted between the outer leaf **18** and the side of case **12** through contact surface **40**. The flared end **36** of outer leaf **18** facilitates the insertion of the user's apparel through contact surface **40**. With the terminal end **26** of inner leaf **16** being received into the recess **28** of case **12**, the insertion of the user's apparel between the leaves **16, 18** is not obstructed by any contact with the terminal end **26** of inner leaf **16**. Should the user decide that the contact pressure at contact surface **40** be adjusted to either increase or decrease the grip force **31** of the clip **10** on the user's apparel, the user will first remove the belt and then insert a tool, such as a screwdriver, through access slot **44** to access the head of screw **22**. The rotation of screw **22** by the lever action of the screwdriver will adjust the spring height or bow distance **42** of the half-elliptical spring **30**. As half-elliptical spring **30** is activated by means of tightening or loosening screw **22** into the hole **25** of case **12**, secondary spring **30** adjusts its spring force on the primary spring. As previously described, the contact pressure **31** at contact surface **40** is determined by the primary spring and the position of outer leaf **18** and inner leaf **16** in relation thereto. As screw **22** is adjusted to vary the spring height **42** of spring **30**, the semicircular portion **20** is rotated causing the spring force on the primary spring to increase or decrease the gripping or mounting pressure **31** at contact surface **40**. As spring height **42** decreases by the tightening of screw **22**, the primary spring causes the contact pressure **31** to increase, thereby increasing the gripping force of the clip **10** on the user's apparel. As the spring height **42** is increased by the loosening of screw **22**, the contact force **31** is decreased to loosen the grip force **31** of the clip **10** on the user's apparel.

Several different embodiments of the present invention are described in the following description. Throughout the remaining description and figures, wherever possible, like or similar numerals will refer to like or similar parts.

Referring now to FIGS. **4** and **5** showing an alternative to the embodiment shown in FIG. **1**, the alternative clip **50** includes a strip of spring steel folded over to form an outer leaf **52**, an inner leaf **54**, and a semicircular portion **56**. As was the case of the preferred embodiment, the inner leaf **54** is received within a recess **28** in the side of case **12** and is affixed to the case **12** by a screw **22**. As distinguished from the embodiment of FIG. **1**, the inner leaf **54** includes parallel flats **62, 64** and a half-elliptical spring or bow spring **66** serving as a secondary spring. Half-elliptical spring **66** contacts the inner side of case **12** at contact points **32, 34**. The clip **50** operates similarly to the preferred embodiment shown in FIG. **1** in that the threading of screw **22** in tapped hole **25** adjusts the spring force of secondary spring **66** causing the semicircular portion **56** to rotate thereby energizing the primary spring to force outer leaf **52** to move or rotate against the side of case **12** at contact surface **40** to adjust the gripping pressure or contact pressure **31**. This embodiment permits the bow spring or secondary spring **66** to be sized to achieve a predetermined range of contact pressure **31**. The parallel flats **62, 64** provide additional stability.

Referring now to FIGS. **6, 7,** and **8**, there is shown another alternative to the embodiment shown in FIG. **1**. The clip **70** includes a strip of spring steel folded over to form an outer leaf **72**, a semicircular portion **74**, and an inner leaf **76**. The inner leaf **76** includes a U-shaped or semicircular slot **78** for receiving a double-headed screw **80**. The double heads **82, 84** of screw **80** form an annular groove **86** having an inner diameter smaller than the diameter of the semicircular slot **78** and an outer diameter greater than the diameter of semicircular slot **78** whereby the free end **88** of inner leaf **76** is maintained between the heads **82, 84** as the screw **80** is threaded into the tapped hole **25** of the case **12**. The clip **70** operates similarly to the preferred embodiment of FIG. **1** in that the threading of screw **80** into hole **25** of case **12** adjusts the spring force of inner leaf **76** by increasing or decreasing the distance **42**. As distance **42** is reduced, the semicircular portion **74** is rotated to energize the primary spring forcing outer leaf **72** to move or rotate against the side of case **12** at contact surface **40** to adjust the gripping pressure or contact pressure **31**. Although the inner leaf **76** is shown having a curvature, the inner leaf **76** could be straight if so desired.

The embodiments of the present invention shown in FIGS. **9–20**, differ in operation from that described with respect to FIGS. **1–8**. In the embodiments shown in FIGS. **1–8**, the contact pressure adjustment means included an inner leaf and screw which, when the screw was tightened, causes the semicircular portion of the clip to rotate and increase the contact pressure **31** at the contact surface **40**. The embodiments shown in FIGS. **9–20**, however, include an adjustment means which applies a linear force on the clip spring to increase the load on the clip spring so as to increase the contact pressure **31** at the contact surface **40**.

Referring now to FIGS. **9** and **10**, the clip **90** includes a generally S-shaped leaf spring **92** made of spring steel

RIDGE EXHIBIT 2005
2985, LLC. v. The Ridge Wallet LLC
IPR2024-00692

with a rectangular-shaped metal flat or lever **94** stamped from one end of the leaf spring **92** so as to leave an aperture **96**. One end of the metal flat **90** is free while the other end forms a bend with the leaf spring **92**. The leaf spring **92** contacts the side of the tape measure case **12** at contact point **98** and at contact surface **40**. The metal flat **94** includes a rectangular-shaped leg **100** at its free end. It is preferred that the leg **100** is at an angle to the flat **94** to allow flat **94** to bend and to also allow a piece of apparel to pass over metal flat **94**. The contact point **98** of leaf spring **92** and the leg **100** of metal flat **94** may be disposed in a recess **28** of case **12** if desired. By providing recess **28** in this embodiment, additional provision will be made to prevent the interference of the leg **100** with the insertion of a piece of apparel within the clip **90**. A screw **22** is disposed through an aperture **102** in metal flat **94** for threaded engagement in the tapped hole **25** of case **12**. Due to the extension of the metal flat **94** from one end of leaf spring **92** and the leg **100** at the other end, metal flat **94** is offset from the bottom of recess **28** at distance **42**. Therefore, as the screw **22** is tightened within hole **25**, an angular moment is created at the bend so as to increase the contact pressure **31** at contact surface **40**.

Referring now to FIGS. **11** and **12**, there is shown clip **110**, another embodiment of the invention using linear rather than translational force for the adjustment of the tape measure clip. The clip **110** has been stamped from a continuous strip of spring steel from which has been formed an outer leaf **112**, a pair of parallel inner leaves **104**, semicircular portions **116** between outer leaf **112** and inner leaves **104**, and a medial leaf **118** bent into a U-shape so as to form inner and outer flat portions **119**, **121**, respectively. The upper flat **121** includes a mounting aperture **120** for the passage of screw **22** which is then disposed within an aperture **22** in the lower flat **119** for threading engagement within tapped hole **25** of case **12**. The pair of inner leaves **104** are received within the recess **28** of case **12**. However, since the bend of medial leaf **118** has a smaller radius than the semicircular portion **116** of inner and outer leaves **112**, **104**, the inner flat **119** of medial leaf **118** is disposed above the bottom of recess **28** a distance **42**. As the screw **22** is tightened within the hole **25**, the distance **42** between the medial leaf and the bottom of recess **28** is reduced thereby applying a linear force to the outer leaf **112** so as to increase the contact pressure **31** at the contact surface **40**. Likewise, loosening the screw **22** reduces the contact pressure **31**.

Referring now to FIGS. **13** and **14**, clip **130** is a continuous strip of spring steel with an inner leaf **132** bent to form a semicircular portion **134** which extends to outer leaf **136**. The inner leaf **132** is received within the recess **28** of the case **12**. Outer leaf **136** is bent under at **138** to form a medial leaf **140**. Medial leaf **140** includes a protruding bent portion which forms a shoe **142** for engagement with contact surface **40** of the case **12**. The medial leaf **140** includes an aperture **141** adjacent its free end for alignment with an aperture **143** in inner leaf **132** through which is disposed screw **22** for threading engagement with the tapped hole **25** of case **12**. An access hole **144** is provided in the outer leaf **136** to allow access to the screw **22**. To increase the contact pressure **31** at contact surface **40** by the shoe **142**, screw **22** is threaded into hole **27** of case **12**. As medial leaf **140** moves toward the case **12** and the distance between the bottom of recess **28** and medial leaf **40** is reduced, the medial leaf **140** and outer leaf **136** move inwardly by a direct, linear motion, as opposed to a translational motion of the embodiment of FIG. **1**.

Other alternative embodiments may be employed to increase and decrease the contact pressure **31** by linear, as opposed to translational, motion or force without deviating from the scope of the invention. FIGS. **15** and **16** illustrate a modification of the embodiment of FIGS. **13** and **14**. In this embodiment, the medial leaf **146** includes a folded free end forming a semicircular portion **148** and an interior leaf **150**. Coaxial apertures are provided in outer leaf **136**, medial leaf **146**, interior leaf **150**, and inner leaf **132** whereby screw **22** will pass through the apertures of outer leaf **136** and medial leaf **146** for disposal within the apertures of interior leaf **150** and inner leaf **132** for threaded engagement within the hole **25** of case **12**.

FIGS. **17–20** illustrate two embodiments whereby the linear force is applied directly to the outer leaf. Referring now to FIGS. **17** and **18**, there is shown a clip **152** in the form of an S-shaped, continuous strip of spring steel. One end **154** contacts the case **12** at **98** and the flared end **156** contacts the case at contact surface **40**. An aperture **158** is provided in the leaf **152** through which is disposed screw **22** for threaded engagement within tapped hole **25** of case **12**. As the screw **22** is threaded into the hole **25**, a linear force is applied to the leaf **152** and causes the leaf **152** to bear against the case at contact line **98** and contact surface **40**. As the screw is tightened, the contact force **31** at surface **40** is increased.

Referring now to FIGS. **19** and **20**, there is shown a modification of the embodiment of FIGS. **17** and **18** wherein the end **154** of leaf **152** includes means for anchoring the end **154** within the case **12**. The anchoring means includes a pair of bent ears **158** passing through apertures **159** in the side of the case **12** whereby the ears **158** hook underneath and bear against the inside of the case **12** to appropriately anchor the end **154** of the leaf **152**.

Other embodiments of the present invention may be used to adjust the contact pressure **31** of the clip **10** against the case **12**.

Referring now to FIGS. **21** and **22**, the clip **160** is a generally L-shaped, continuous strip of spring steel with one leg **162** mounted over a ledge **164** protruding from the side of the case **12**. The ledge **164** preferably is V-shaped and a part of the side of the case **12** forming a support surface **166**. The support surface **166** is angled obliquely from the side of the case **12** so as to form an oblique angle therewith. The longer leg **168** of clip **160** includes a flared end **170** engaging contact surface **40** of case **12**. The short leg **162** is fastened to the support surface **166** by a screw **22** extending through an aperture **167** in the short leg **162** for threading engagement in a tapped hole **172** in ledge **164**. The forward edge **174** of shorter leg **162** bears against the side of the case **12**. The oblique angle formed between the shorter leg **162** and case **12** is smaller than the oblique angle formed by support surface **166** and the side of the case **12** such that there is a gap or distance between the shorter leg **162** and support **166**. As the screw **22** is tightened into hole **172** of ledge **164**, a lever action is created between the bearing edge **174**, screw **22**, and the contact surface **40** whereby the flared end **170** of longer leg **168** bears against the side of the case **12**. The tightening of the screw **22** thereby increases the contact force **31** of the longer leg **168** against contact surface **40**. Likewise, as

RIDGE EXHIBIT 2005
2985, LLC. v. The Ridge Wallet LLC
IPR2024-00692

screw 22 is retracted from the tapped hole 172, the contact force 31 is decreased.

Referring now to FIGS. 23 and 24, there is shown a clip 180 made of a continuous strip of spring steel. The clip 180 is U-shaped forming an inner leaf 182, semicircular portion 184, and outer leaf 186. The inner leaf 182 is received within recess 28 of case 12 and is attached to the side of case 12 by means of a screw 22 extending through an aperture 187 in inner leaf 182 and threadingly engaged with the tapped hole 25 in case 12. An access aperture 188 is provided in outer leaf 186 to permit the insertion of a screwdriver to obtain access to screw 22. As distinguished from previous embodiments, the free end 190 of outer leaf 186 does not engage and contact the side of case 12. An elongated slot 192 is provided adjacent the free end 190 of outer leaf 186 for the attachment of an adjustment shoe 194. Shoe 194 includes a tapped hole 196 for threadingly engaging a screw 198 passing through the slot 192. The slot 192 is parallel to the longitudinal axis of outer leaf 186. The shoe 194 is sized so as to bridge the gap between the contact surface 40 and the free end 190. With the shoe 194 mounted in the uppermost portion of the slot 192, the contact force 31 is at its minimum. As the shoe is moved down the slot 192, the shoe biases the outer leaf 186 away from the side of the case 12 to increase the contact pressure 31 at the contact surface 40. Thus, by adjusting the shoe within slot 192, the user may increase or decrease the contact force 31.

Referring now to FIGS. 25 and 26, a variation of the embodiment of FIGS. 23 and 24 is shown. The clip 200 replaces the shoe of the embodiment of FIGS. 23 and 24 with a raised support 202 projecting from the side of the case 12. The support 202 includes an inclined ledge 204 for engagement with the clip 200. The clip 200 includes a generally J-shaped strip of spring steel. The end 206 of clip 200 includes a longitudinal slot 208 having an axis generally parallel with the axis of the clip 200. A screw 22 passes through the slot 208 and is threadedly engaged in a tapped hole 172 within the support 202 of case 12. The ledge 204 is at an angle with the surface of the case 12 such that upon attachment of the clip 200 to the support 202, the flared end 210 of the clip 200 engages the side of case at contact surface 40. To adjust the contact pressure 31 at the contact surface 40, the clip 200 is adjusted within the slot 208 and screw 22 connection. By lengthening the distance between the screw 22 and the point of engagement at contact surface 40, the contact pressure 31 is increased. Thus, the contact pressure 31 of clip 200 may be adjusted.

FIGS. 27–30 illustrate a slightly different embodiment from those previously described. The previous embodiments, with the exception of those shown in FIGS. 23–26, used the tightening of the screw 22 to increase the contact pressure 31 at the contact surface 40. The embodiments of FIGS. 27–30 loosen the screw to increase the contact pressure 31.

Referring now to FIGS. 27 and 28, there is shown clip 220 wherein a lever action is employed to adjust the clip contact pressure 31. The clip 220 includes a continuous strip of spring steel stamped to form a generally S-shaped leaf 222, a bearing flat 224, and a pair of anchor tangs 226. The anchor tangs 226 are generally L-shaped, extending perpendicular to and on each side of bearing flat 224. The case 12 includes a pair of recesses 228 for receiving anchor tangs 226. A screw 22 is threadingly engaged in the tapped hole 25 of the case 12 with its head disposed beneath the bearing flat 224. The bearing flat 224 includes an adjustment aperture 230 which is sized to permit the passage of a screwdriver for turning screw 22 but diametrically smaller than the head of screw 22. To increase the contact pressure 31 at contact surface 40, the screw 22 is rotated out of the threaded hole 25 such that the head of screw 22 bears upon the underside of the lip of adjustment aperture 230. As the screw 22 moves away from the side of the case 12, the screw 22 forces the bearing flat 224 away from the side of the case 12. This causes a lever action due to the anchoring of the anchor tangs 226 against the underside of the case 12 thereby increasing the spring pressure of leaf 222 and increasing the contact pressure 31 at contact surface 40.

Referring now to FIGS. 29 and 30 an alternate to the embodiment of FIGS. 27 and 28 is shown. FIGS. 29 and 30 illustrate a clip 230 made of a continuous strip of spring steel. The clip 230 includes an outer leaf 232 joining an inner leaf 234 by a semicircular portion 236. An anchor tang 238 is formed on the end of inner leaf 234. The anchor tang 238 is received within an aperture 240 in the side of the case 12. The anchor tang 238 is generally L-shaped in cross-section whereby the free end is generally parallel to the underside of the case so as to bear against the underside of the case 12 as hereinafter described. A screw 22 is threadedly engaged to a tapped hole 25 in the side of the case 12 with the head of the screw 22 being positioned beneath inner leaf 234. Inner leaf 234 includes an aperture 242 sized to receive the head of a screwdriver for engagement with screw 22 but diametrically smaller than the head of the screw 22 to prevent the screwhead from passing through the aperture 242. The outer leaf 232 includes an access aperture 244 to permit access to the head of the screw 22 by the screwdriver. As described with respect to FIGS. 27 and 28, to increase the contact pressure 31 at contact surface 40, the screw 22 is rotated away from the side of the case 12 such that the head of the screw 22 bears upon the lip of the aperture 242. This force on the inner leaf 234 causes the clip 230 to rotate whereupon the anchor tangs 238 engage the underside of the case 12, and the contact pressure 31 is increased at the contact surface 40.

FIGS. 31–34 illustrate a different embodiment of the present invention whereby the clip is rotated about an arcuate surface on the side of the case 12 to adjust contact pressure 31.

Referring now to FIGS. 31 and 32, there is shown a clip 250 whereby the entire clip 250 may be moved relative to the case 12 to adjust the contact pressure 31. The clip 250 includes a continuous strip of spring steel forming a leaf 252, semicircular portion 254, and inner arcuate leaf 256. The case 12 includes a mount 258 which is an arcuate protrusion from the side of the case 12. The mount 258 is preferably an integral part of the case 12. However, an arcuate member made of metal, plastic, or other material may be attached to the side of the case 12 to form the mount 258. An elongated slot 260 has been formed in arcuate leaf 256 with the slot 260 being generally parallel to the longitudinal axis of the clip 250. A screw 22 is disposed through slot 260 and threadedly engaged in a tapped hole 172 extending through the mount 258. An access aperture 262 is provided in outer leaf 252 to provide screwdriver access to the screw 22. The tapped hole 172 is disposed on the apex of the arcuate mount 258. The curvature of the mount and the curvature of the arcuate leaf 256 are substantially the same so as to be slidingly engageable.

RIDGE EXHIBIT 2005
2985, LLC. v. The Ridge Wallet LLC
IPR2024-00692

The outer leaf **252** has been formed with a curvature such that upon positioning the screw **22** in the lowermost end of longitudinal slot **260**, the contact pressure **31** on contact surface **40** is at a minimum. By sliding the slot **260** downward over screw **22**, the clip **250** is rotated against the side of case **12** such that the contact pressure **31** is increased at contact surface **40**.

Referring now to FIGS. **33** and **34**, an alternative mount is disclosed. The clip **270** includes an outer leaf **272**, semicircular portion **274** with the semicircular portion **274** forming an arcuate segment **276**. The case **12** includes a concave recess **278** having a radius conforming to the radius of arcuate leaf **276** whereby arcuate segment **276** is received within concave recess **278**. An elongated slot **280** is provided in arcuate leaf **276** with the longitudinal axis of slot **280** being generally parallel to the axis of clip **270**. A screw **22** is disposed through slot **280** for threaded engagement in tapped hole **172** in the bottom of recess **278**. An access aperture **282** is provided in outer leaf **272** to permit access by a screwdriver to the screw **22**. As distinguished from the embodiment of FIGS. **31** and **32**, the contact pressure **31** at contact surface **40** is at a minimum when the screw **22** is positioned at the uppermost end of elongated slot **280**. Upon sliding the slot **280** upward over screw **22** by rotation of arcuate segment **276**, the clip **270** is rotated to increase the contact pressure **31** at contact surface **40**.

Referring now to FIGS. **35** and **36**, there is shown another alternative to the embodiment shown in FIG. **1**. The clip **290** includes a strip of spring steel folded over to form an outer leaf **292**, a semicircular portion **294** and an inner leaf **296**. Inner leaf **296** includes an aperture **298** for receiving a screw **300** therethrough. The aperture **298** is countersunk, so that countersink screw head **302** fits therein to permit insertion of a belt or piece of clothing without interference with screw **300**. Outer leaf **292** includes access aperture **304** which is colinear with aperture **298** and is diametrically larger than screw head **302** to permit screw **300** to pass through access aperture **304** into aperture **298**. The clip **290** operates similarly to the preferred embodiment of FIG. **1** in that the threading of screw **30** into hole **25** of case **12** adjusts the spring force of inner leaf **296** by increasing or decreasing the distance **42**. As distance **42** is reduced, the semicircular portion **294** is rotated to energize the primary spring forcing outer leaf **292** to move or rotate against the side of case **12** at contact surface **40** to adjust the gripping pressure or contact pressure **31**. Although the inner leaf **296** is shown having a curvature, the inner leaf **296** could be straight if so desired.

While preferred and alternative embodiments of the invention have been shown and described, modifications thereof can be made by one skilled in the art without departing from the spirit of the invention.

I claim:

1. A tool adapted for mounting on a user's apparel, comprising:

a case and a spring steel member;

said spring steel member folded over itself and forming an outer leaf and an inner leaf connected by a curved length, said inner leaf having mounting means for mounting said member onto said case and said outer leaf having gripping means for gripping the user's apparel between said gripping means and said case;

said mounting means being disposed opposite said gripping means;

said curved length forming a first spring means for rotating said outer leaf toward said case;

said inner leaf forming a second spring means for adjusting the spring force of said first spring means;

said gripping means having a contact means for contacting the users apparel whereby the rotation of said outer leaf by said first spring means causes said gripping means to press upon said case with a contact pressure; and

said second spring means having adjustment means for adjusting said contact pressure by adjusting the spring force of said first spring means.

2. The tool of claim **1**, wherein said second spring means is a half-elliptical spring.

3. The tool of claim **1**, wherein said adjustment means includes a threaded member for connection to said case for applying a force to said second spring means.

* * * * *

RIDGE EXHIBIT 2005
2985, LLC. v. The Ridge Wallet LLC
IPR2024-00692