Petitioner's Oral Hearing Demonstratives

Apple Inc.
(Petitioner)
v.
Resonant Systems, Inc.
(Patent Owner)

Case Nos. IPR2024-00697
IPR2024-00698
U.S. Patent No. 8,093,767

Before Hon. Karl D. Easthom, Norman H. Beamer, Brian D. Range

FISH.

DEMONSTRATIVE EXHIBIT – NOT EVIDENCE

Instituted Grounds

IPR2024-00697:

Ground	Patent Claims	§103 Basis
1A	1	Shahoian-Cosper
1B	1-4	Shahoian-Cosper-Rossi
1C	5	Shahoian-Cosper-Rossi-Ramsay
2A	1	Shahoian-Cosper-Ramsay-Aldrich
2B	1-5	Shahoian-Cosper-Ramsay-Aldrich-Rossi

Petition (Pet.), 1

IPR2024-00698:

Ground	Patent Claims	§103 Basis
1A	1	Izumi-Cosper
1B	1-3	Izumi-Cosper-Rossi
1C	1	Izumi-Cosper-Ibuki
1D	4-5	Izumi-Cosper-Rossi-Ibuki
2A	1	Izumi-Cosper-Ibuki-Aldrich
2B	1-5	Izumi-Cosper-Ibuki-Aldrich-Rossi

Petition (Pet.), 2

DEMONSTRATIVE EXHIBIT – NOT EVIDENCE

Table Of Contents

Issue 1: The Izumi Grounds Render Obvious Element 1.5.3	4
Issue 2: The Shahoian Grounds Render Claim 1 Obvious	22
Issue 3: “Directional-signal splitter/inverter” – (Claim 2)	36
Issue 4: “Vibration Sensor” Element – (Claim 3)	41
Issue 5: “Continuously monitors” Element – (Claim 3)	45

Topics For Discussion

Issue 1: The Izumi-Cosper Grounds Render Obvious Element 1.5.3

- Izumi-Cosper renders obvious “a switch that receives a directional signal d from the processor.”
- Izumi-Cosper combination not undermined by Izumi’s example implementations (e.g., PWM control).

Issue 2: The Shahoian Grounds Render Claim 1 Obvious

Issue 3: “Directional-signal splitter/inverter” – (Claim 2)

Issue 4: “Vibration Sensor” Element – (Claim 3)

Issue 5: “Continuously monitors” Element – (Claim 3)

DEMONSTRATIVE EXHIBIT – NOT EVIDENCE

Petition – Table of Contents

TABLE OF CONTENTS

I. REQUIREMENTS FOR IPR UNDER 37 C.F.R. § 42.104 8
- A. Grounds for Standing Under 37 C.F.R. § 42.104(a) 8
- B. Challenge Under 37 C.F.R. § 42.104(b) and Relief Requested 8

II. SUMMARY OF THE '767 PATENT 3
- A. Brief Description 3
- B. Prosecution History 3

III. LEVEL OF ORDINARY SKILL 4

IV. Claim Construction under 37 C.F.R. §§ 42.104(b)(3) 4
- A. Means-Plus-Function Terms 5
  - 1. "driving component" (all claims) 6
  - 2. "control component . . ." (all claims) 8

V. DETAILED EXPLANATION OF GROUNDS 10
- A. GROUND 1A – Izumi-Cosper renders obvious claim 1 (plain and ordinary meaning) 10
  - 1. Izumi 11
  - 2. Cosper 13
  - 3. Predictable Izumi-Cosper Combination 15
  - 4. Application to Challenged Claims 21
- B. GROUND 1B – Izumi-Cosper-Rossi renders obvious claims 1-3 (plain and ordinary meaning) 30
  - 1. Rossi 30
  - 2. Predictable Izumi-Cosper-Rossi Combination 31
  - 3. Application to Challenged Claims 36
- C. GROUND 1C – Izumi-Cosper-Ibuki renders obvious claim 1 (plain and ordinary meaning) 46
  - 1. Ibuki 47
  - 2. Predictable Combination of Izumi-Cosper -Ibuki 48
  - 3. Application to Challenged Claims 51
- D. GROUND 1D – Izumi-Cosper-Rossi-Ibuki renders obvious claims 4-5 (plain and ordinary meaning) 52

EX1001, Cl. 1

DEMONSTRATIVE EXHIBIT – NOT EVIDENCE

The Izumi Grounds disclose a switch that receives a directional signal d "from the processor"

Izumi:

[0009] Preferably, the controller determines a shape and a phase of the current waveform necessary for the intended motion of the moving element. Or, it is also preferable that the controller determines a shape and an application time of the current waveform. The driving unit can be driven more efficiently by controlling the phase and the application time of the current waveform in addition to controlling the shape of it.

[0060] In addition, the alternating voltage output part **61** may have a circuit configuration which is shown in **FIGS. 22A** to **22**E. The alternating voltage output part **61** of **FIG. 22A** is constituted by a series circuit of switching elements Q1 and Q4 each of which is a NPN transistor connected between the control voltage (+Vs) and the ground, and a series circuit of switching elements Q2 and Q3 each of which is a NPN transistor connected between the control voltage (+Vs) and the ground. The coil **55** is connected between a connection point of the switching elements Q1 and Q4 and a connection point of the switching elements Q2 and Q3. The switching elements Q1 to Q4 are controlled by control signals **S1** to **S4**, respectively, which are inputted into the base terminals by the current waveform decider **60**.

EX1005, [0009], [0060], FIGS. 1-2; Pet., 11-13, 27-28

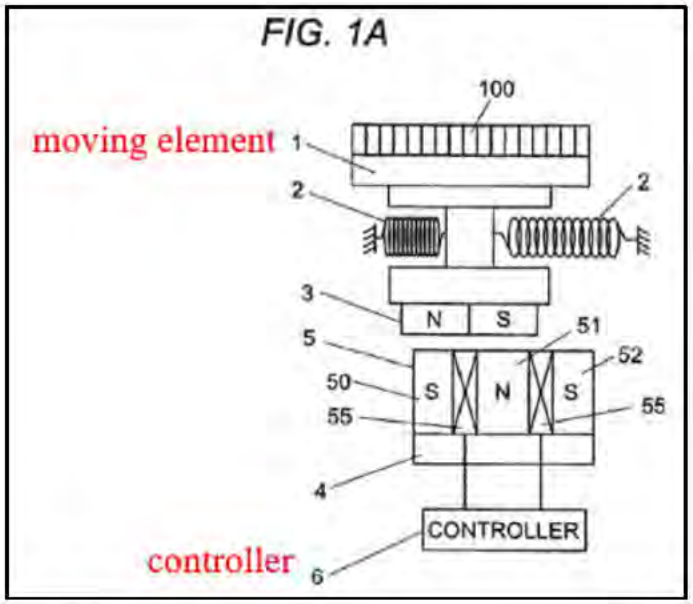

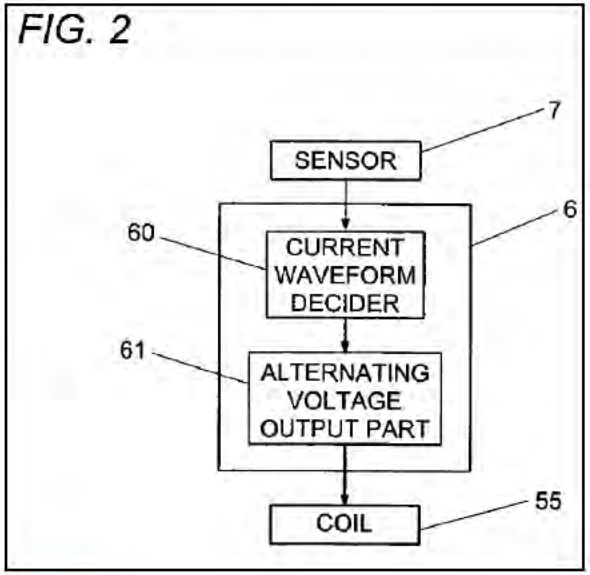

FISH.

DEMONSTRATIVE EXHIBIT – NOT EVIDENCE

The Izumi Grounds disclose a switch that receives a directional signal d "from the processor"

Cosper:

the motion of the subassembly may be derived). For example, one or more sensors **14** may detect position, velocity, acceleration, etc. for the subassembly (e.g., of bias **16** and/or mass **18**). In some variations, a sensor **14** is connected to a driver

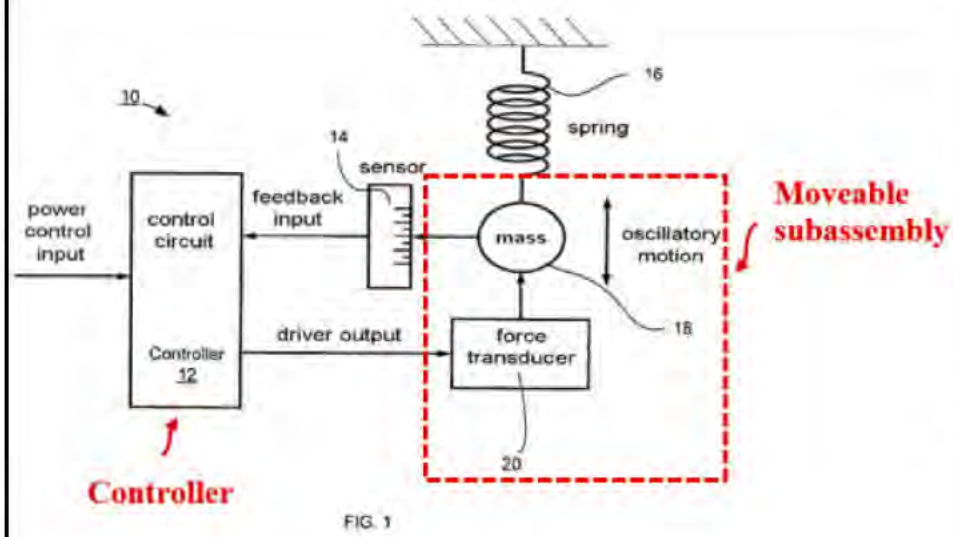

FIG. 1

[0049] FIG. **1** illustrates schematically an exemplary control system **10** for use with a mechanical resonant subassembly system. In general, the control system **10** described herein includes control logic (e.g., hardware, software, firmware, or combinations thereof included with a controller or control circuit **12**), a sensor **14** for determining a parameter from the moveable subassembly (e.g., including a bias **16** and mass **18**), a sensor input for inputting the parameter into the control logic of control circuit **12**, and a control output from the control logic to drive the moveable subassembly at or near resonance via force transducer **20**.

[0056] Implementation of the described methods and operations may be carried out via software, hardware, firmware, or any suitable combination thereof. Further, one of ordinary skill in the art will recognize that various algorithms for analyzing feedback signals and driving the resonant subassembly as described are contemplated.

The power converter system is controlled by a microprocessor system. The microprocessor system provides an integrated closed loop control and the PWM generation for the converter systems, in addition to the control of the white light generated by the LED luminary. This approach pro-

EX1009, [0049], [0056]; EX1043, 2:19-43; Pet., 18

DEMONSTRATIVE EXHIBIT – NOT EVIDENCE

The Izumi Grounds disclose a switch that receives a directional signal d "from the processor"

Petition:

3. Predictable Izumi-Cosper Combination

A POSITA would have been motivated to implement Izumi's linear actuator that utilizes sensor feedback in accordance with Cosper's suggestions for utilizing multiple sensors, and use of a microprocessor as a controller. APPLE-1003, ¶¶109-122. Izumi's driving unit for driving a linear actuator resonance system includes a controller that drives a moving element. APPLE-1005, [0007]-[0008]. Similar prior art systems, such as Cosper, demonstrated the conventional knowledge of using more than one sensor to precisely monitor and control vibrations of the actuator, and a microprocessor that receives inputs from the sensors and that generates control signals to control the actuators. *Id.*; APPLE-1003, ¶109.

Additionally, Izumi's "controller" would have been implemented using a microprocessor and memory, in accordance with Cosper's suggestions. APPLE-1003, ¶111. The microprocessor receives inputs such as signals from the sensors (e.g., including from sensors that detect position, velocity, acceleration, load, etc.), and generates the "control signals" for control of the oscillating movement in accordance with Izumi. APPLE-1005, [0040]; [0047]-[0050]; [0060]-[0062]; FIGS. 2, 22A, 23A; APPLE-1003, ¶111.

Never addressed in Patent Owner Response

Pet., 15-16

DEMONSTRATIVE EXHIBIT – NOT EVIDENCE

The Izumi Grounds disclose a switch that receives a directional signal d "from the processor"

Dr. Hannaford:

111. I note that a microprocessor and memory would have been used to implement Izumi's "controller." A POSITA would have recognized from Izumi's description of the "controller," including its description as including a "CPU," that Izumi includes a microprocessor. Even beyond Izumi's description, a POSITA would have implemented the "controller" using a microprocessor and memory, in accordance with Cosper's suggestions. The microprocessor receives inputs such as signals from the sensors (e.g., including from sensors that detect position, velocity, acceleration, load, etc.), and generates the "control signals" for control of the oscillating movement in accordance with Izumi. APPLE-1005, [0040]; [0047]-[0050]; [0060]-[0062]; FIGS. 2, 22A, 23A; APPLE-1009, [0050].

the control scheme is provided in accordance with Cosper. The microprocessor receives inputs such as signals from the "sensors" (e.g., including from position, velocity, acceleration, force, load, etc. sensors), and generates the control signals for control of the oscillating movement. APPLE-1009, [0051]-[0052].

Never addressed in Patent Owner Response

EX1003, ¶ 111-112; Pet., 15-16

DEMONSTRATIVE EXHIBIT – NOT EVIDENCE

The Izumi Grounds disclose a switch that receives a directional signal d "from the processor"

118. Third, a POSITA would have been motivated to combine Izumi and Cosper to utilize a microprocessor and memory, facilitating implementation of software instructions that can be executed to reliably and effectively carry out the control scheme. Izumi teaches that the controller is or has a CPU. APPLE-1005, [0063]. A POSITA would have known that a CPU is a microprocessor. *See, e.g.*, APPLE-1044, 2 (describing the term CPU as referring almost exclusively to microprocessors). For example, for Izumi's relatively small and handheld electronic device, a POSITA would have known from Izumi that the CPU is a microprocessor. A POSITA would also have known that a CPU with a ROM, as

s to use a

there were a

finite number of identifiable and predictable choices, or even single-chip, off-the-shelf solutions for implementing Cosper's software-executing "hardware"—all of which would have been some form of microprocessor and memory. In the combination, those finite choices would have included the CPU of Izumi.

would have

been further motivated to implement Izumi's "controller" using a "microprocessor" as a suitable option effective to receive feedback sensor data and determine appropriate control signals, as well as other operations of Izumi's controller.

act, handled nature of Izumi's

understood, and found obvious, that

the CPU included a microprocessor to accommodate the small form-factor of the device.

EX1003, ¶118, 119, 120, 129; Pet., 18-19, 69

Dr. Hannaford

Never addressed in Patent Owner Response

FISH.

DEMONSTRATIVE EXHIBIT – NOT EVIDENCE

The Izumi Grounds disclose a switch that receives a directional signal d "from the processor"

Never addressed in Patent Owner Response

Petition:

A POSITA combining Izumi and Cosper would have reasonably expected to succeed because doing so was the application of known techniques (Cosper's use of feedback from multiple sensors) to a known system (Izumi's driving system that utilizes sensor feedback to detect behavior of a movable component during operation) ready for improvement to yield predictable results (benefits articulated above). *KSR Int'l Co. v. Teleflex Inc.*, 550 U.S. 398, 417 (2007) ("[W]hen a patent 'simply arranges old elements with each performing the same function it had been known to perform' and yields no more than one would expect from such an arrangement, the combination is obvious."); *see also Intel Corp.*,61 F.4th at 1379-80 ("a person of ordinary creativity, not an automaton"). Indeed, by the timeframe of the '767 patent, "microprocessors" were a known solution for similar devices to reliably control operation and locally handle processing tasks, including in shaver devices. APPLE-1003, ¶122 (citing APPLE-1038, [0020]-[0021] ("CPU" and "memory"); APPLE-1004, 4:16-20 (describing use of a "microprocessor" for linear actuator control), 7:46-53, FIG. 1 ("local microprocessor"); APPLE-1042, [0012] (describing use of a "microcontroller" in shaver control system), [0017],

Pet., 20

DEMONSTRATIVE EXHIBIT – NOT EVIDENCE

The Izumi Grounds disclose a switch that receives a directional signal d "from the processor"

Shahoian:

device **14**. Microprocessor **26** can be provided with software instructions to wait for commands or requests from computer host **12**, decode the command or request, and handle/control input and output signals according to the command or request. In addition, processor **26** preferably operates independently of host computer **12** by reading sensor signals and calculating appropriate forces from those sensor signals, time signals, and stored or relayed instructions selected in accordance with a host command. Suitable microprocessors

Kraus:

to a microcontroller. More preferably, the microcontroller controls the frequency of the electric signal. Even more preferably, the microcontroller compares the detected characteristic data with setpoint data values and controls the frequency of the electric signal such that any deviation from the setpoint data values is minimized. In some cases, the

Gregorio:

The haptic feedback system includes a processor **12**. Coupled to processor **12** is a memory **20** and an actuator drive circuit **16**, which is coupled to an LRA actuator **18**. Processor **12** may be any type of general purpose processor, or could be a processor specifically designed to provide haptic effects, such as an application-specific integrated circuit ("ASIC").

APPLE-1004, 4:16-20; APPLE-1042, [0012]; APPLE-1007, 2; Pet., 19-20

DEMONSTRATIVE EXHIBIT – NOT EVIDENCE

The '767 Patent – Independent Claim 1

1. A linear resonant vibration module comprising:
a housing;
a moveable component;
a power supply;
a driving component that drives the moveable component in each of two opposite directions; and
a control component that includes a microprocessor and that controls supply of power from the power supply to the driving component to cause the moveable component to linearly oscillate, the control component including, in addition to the microprocessor,
a control program, stored in one of a separated electronic memory or within the processor, that is executed by the microprocessor to control operation of the linear resonant vibration module, and
a switch that receives a directional signal d from the processor and that selects a corresponding direction of the two opposite directions in which the driving component drives the moveable component,
the control component receiving output signals from sensors within the linear resonant vibration module during operation of the linear resonant vibration module and adjusting one or more operational control outputs of the control component according to the received output signals from the sensors in order that subsequent operation of linear resonant vibration module produces desired outputs from the one or more sensors corresponding to one or more operational control parameters.

Element 1.5.3

EX1001, Cl. 1

FISH.

DEMONSTRATIVE EXHIBIT – NOT EVIDENCE

The Izumi Grounds disclose a switch that receives a directional signal d "from the processor"

Petition – Element 1.5.1:

moveable component to linearly oscillate. APPLE-1003, ¶¶131-132. Izumi expressly indicates that "the controller determines a shape and a phase of the current waveform necessary for the intended motion of the moving element." APPLE-1005, [0009]. In the combination, this is carried out by a "microprocessor" (in accordance with Izumi and Cosper's suggestions). APPLE-1005, [0063] ("CPU" and "ROM"); APPLE-1009, [0049], [0056], [0125]; *see also* APPLE-1003, ¶¶129-130, (citing APPLE-1009, [0084] (incorporating by reference U.S. Patent No. 6,510,995 (APPLE-1043) in its entirety, including 2:19-43; 3:13-24; 3:31-37; 4:20-28; 4:33-5:16, describing "microprocessor" closed loop control)).

Petition – Element 1.5.1:

Based on the control signals from the "microprocessor," the H-bridge switch applies oscillating current to the driving component (wire coil). APPLE-1005, [0040], [0047], [0061], FIG. 22A; *infra*, Ground 1A, Analysis of [1.5.3].

Petition – Element 1.5.3:

In the combination, the switch receives the control signals (e.g. S1-S4) from the microprocessor. APPLE-1005, [0060] ("The switching elements Q1 to Q4 are controlled by control signals S1 to S4, respectively, which are inputted into the base terminals by the current waveform decider 60."); *see also* [0049]-[0051], [0057]-[0059], [0061]; APPLE-1003, ¶138.

EX1049, ¶12; Reply, 4; Pet., 25-27

FISH.

DEMONSTRATIVE EXHIBIT – NOT EVIDENCE

The Izumi Grounds disclose a switch that receives a directional signal d "from the processor"

Dr. Hannaford:

> 135. Each control signal input to each transistor (e.g., control signals S1-S4) provides a direction signal d that controls the ON/OFF state of each of the switches Q1-Q4. *See, e.g.*, APPLE-1005, [0060]-[0062]. In the combined system, each switch receives the transistor "control signal" from the "microprocessor." Izumi explicitly describes that the controller provides the control signals that drive the "electromagnet" and "moving element." *Supra*, Ground 2A, Analysis of Elements [1.5]-[1.6].

EX1003, ¶135; Pet., 27-28

> The switching circuit would receive a direction control signal from the "microprocessor," in accordance with Izumi-Cosper's feedback control, and the direction control signal is split into two signals before passing through an inverter, based on Rossi's suggestions. *Id.* The resulting circuit would include

EX1003, ¶143; Pet., 32

DEMONSTRATIVE EXHIBIT – NOT EVIDENCE

The Izumi Grounds disclose a switch that receives a directional signal d "from the processor"

Patent Owner's Response:

Limitation [1.5.3] of the '767 patent includes the requirement of "a switch that receives a directional signal d from the processor." ('767 Patent at 11:21–22.) For each of the grounds of the -00698 IPR, the petition relies on Izumi as teaching this feature.

All that the quoted portion of Izumi says is that the control signals come from "the current waveform decider 60." (Ex. 1005, ¶ [0060]; Ex. 2009, ¶ 95.) Nowhere does Izumi say that the current waveform decider is a "microprocessor" or that the arrow in Figure 2 connecting it to "alternating voltage output part" 61 is a signal "from [a] processor" (Ex. 1005, Fig. 2.):

Petition:

moveable component to linearly oscillate. APPLE-1003, ¶¶131-132. Izumi expressly indicates that "the controller determines a shape and a phase of the current waveform necessary for the intended motion of the moving element." APPLE-1005, [0009]. In the combination, this is carried out by a "microprocessor" (in accordance with Izumi and Cosper's suggestions). APPLE-

Dr. Hannaford:

12. Moreover, the Petition explained how the "microprocessor" would have been used in the combined system: "Izumi expressly indicates that 'the controller determines a shape and a phase of the current waveform necessary for the intended motion of the moving element," and "[i]n the combination, **this is carried out by a 'microprocessor' (in accordance with Izumi and Cosper's suggestions)**." Pet., 25-26 ("The combination's LRVM includes a control program (software instructions stored in memory, in accordance with Izumi and Cosper) that is executed by the microprocessor to control operation of the LRVM, consistent with Izumi's stated control objectives.").

EX1049, ¶12; Reply, 4; Pet., 25-26

DEMONSTRATIVE EXHIBIT – NOT EVIDENCE

Topics For Discussion

Issue 1: The Izumi-Cosper Grounds Render Obvious Element 1.5.3

- Izumi-Cosper renders obvious “a switch that receives a directional signal d from the processor.”
- Izumi-Cosper combination not undermined by Izumi’s example implementations (e.g., PWM control).

Issue 2: The Shahoian Grounds Render Claim 1 Obvious

Issue 3: “Directional-signal splitter/inverter” – (Claim 2)

Issue 4: “Vibration Sensor” Element – (Claim 3)

Issue 5: “Continuously monitors” Element – (Claim 3)

DEMONSTRATIVE EXHIBIT – NOT EVIDENCE

The Izumi Grounds disclose a switch that receives a directional signal d "from the processor"

Patent Owner's Response:

A POSITA would understand that "PWM control" would not require that the directional signal itself be generated by, or otherwise be "from," a processor. (Ex. 2009, ¶ 99.) Indeed, a POSITA would understand that pulse width modulation (PWM) can readily be performed by entirely analog circuit, such as the following circuit from a Texas Instruments reference design, taking an analog voltage V_{IN} as its input:

Dr. Hannaford:

analog circuit. Instead, Izumi describes the "PWM control method" as a suitable technique that overcomes potential constraints as compared to "complicated control" performed "at every half-cycle or one cycle of the moving element 1." Izumi's description does not limit how the method is implemented. APPLE-1005, [0063].

Izumi:

[0063] Although each of the ON-time and the OFF-time of the voltage is controlled in order to form the intended current waveform in this embodiment, in the actual real time control, it can be difficult to perform complicated control at every half-cycle or one cycle of the moving element **1** due to a constraint of the control device, such as CPU speed, ROM capacity, etc. So, the controller may control a ratio of the ON-time (T1) to the OFF-time (T2), namely a duty ratio (T1/T2), while keeping the sum of the ON-time and the OFF-time (T3=T1+T2) constant. That is, the controller may use a so-called PWM control method. In this case, the controller **6** can form an intended current waveform without using a complex control system.

19. As I discussed previously, multiple reasons would have prompted a POSITA would to utilize a "processor" to implement the controller in the Izumi-Cosper combination. Based on my knowledge and experience in the field and my review of the Izumi and Cosper, even if not expressly described by Izumi alone, the use of a "microprocessor" as recited by independent claim 1 was obvious in view of Izumi-Cosper, for the reasons set forth in the Petition. *See,* Pet., 18-21, 25-27. The passage of Izumi that the Patent Owner Response addresses is not counter to these motivations. To the contrary, a POSITA would have readily implemented the combination utilizing a processor.

EX1049, ¶17, 19; Reply, 6-9

DEMONSTRATIVE EXHIBIT – NOT EVIDENCE

The Izumi Grounds disclose a switch that receives a directional signal d "from the processor"

Dr. Goossen:

Q. So, PWM control method does not prohibit the use of CPU, generally speaking?

A. Well, I mean you can, you can write a program to do anything.

So, you know, I don't know. I actually haven't performed that analysis. The analysis I performed was that it could be done with analog methods.

Izumi:

[0063] Although each of the ON-time and the OFF-time of the voltage is controlled in order to form the intended current waveform in this embodiment, in the actual real time control, it can be difficult to perform complicated control at every half-cycle or one cycle of the moving element **1** due to a constraint of the control device, such as CPU speed, ROM capacity, etc. So, the controller may control a ratio of the ON-time (T1) to the OFF-time (T2), namely a duty ratio (T1/T2), while keeping the sum of the ON-time and the OFF-time (T3=T1+T2) constant. That is, the controller may use a so-called PWM control method. In this case, the controller **6** can form an intended current waveform without using a complex control system.

Dr. Hannaford:

for such applications, as I discussed previously. To be clear, there is nothing in Izumi that describes the use of a ***CPU*** as inherently "complicated," "complex," or undesirable, but rather that certain ***techniques*** can be "complicated" and thus susceptible to constraints of processing speed, for example.

EX1003, ¶135-136; Pet., 27-28

FISH.

DEMONSTRATIVE EXHIBIT – NOT EVIDENCE

The Izumi Grounds disclose a switch that receives a directional signal d "from the processor"

Dr. Hannaford:

effective feedback control. Relatedly, by including multiple sensors, a POSITA would have appreciated that the processing resources of the controller (CPU) required for performing real-time control over the actuator would have been reduced. Izumi recognized that "the actual real time control" at the time could be difficult "due to a constraint of the control device, such as CPU speed." APPLE-1005, [0063]. By using multiple sensors to collect actual behavioral data, a POSITA would have recognized that the CPU speed of Izumi's LRVM could have been used instead for real-time control over the actuator.

EX1003, ¶115; Pet., 18

DEMONSTRATIVE EXHIBIT – NOT EVIDENCE

Ibuki combinations further render obvious a switch that receives a directional signal d "from the processor"

Patent Owner's Response:

¶¶ 150–151.) Grounds 1C, 1D, 2A, and 2B add no further citations to prior art references for limitation [1.5.3]. (Petition at 51–53, 71, 74; Ex. 1003, ¶¶ 153, 175, 219, 228.) Accordingly, all grounds rest on the Ground 1A citations to Izumi to satisfy the "switch that receives a directional signal d from the processor" limitation. (Ex. 2009, ¶ 92.)

Ibuki:

[0021] The controller **13** detects the ON/OFF signals outputted from the main switch **11** and the mode switch **12**, and outputs a control signal to the driving unit **7** to control the operation of the driving unit **7** depending on the status of the ON/OFF signals outputted from the main switch **11** and the mode switch **12**. The controller **13** comprises, for example, a CPU (Central Processing Unit), a ROM (Read Only Memory), and a RAM (Random Access Memory), and controls the operation of the driving unit **7**, as the CPU executes a program stored in the ROM. A controller **14** (sic) may be composed of individual parts such as a logic circuit, a transistor, and an oscillating circuit, in place of the CPU or a like component.

Dr. Hannaford:

21. The Ibuki reference provides express disclosure of a microprocessor that controls oscillation, among other device functions. Pet., 49 (citing APPLE-1038, [0021]). Ibuki, like Izumi, is directed to oscillation in an electric shaver device, and discloses device control using a "CPU that executes a program stored in the ROM." *Id.* Indeed, as set forth in the Petition and my first declaration (and ignored by the POR), "a POSITA would have been motivated to combine Izumi-Cosper and Ibuki to utilize a microprocessor and memory, facilitating implementation of software instructions that can be executed to reliably and effectively carry out the control scheme." Pet., 50 (citing APPLE-1003, ¶171). In

22. In the Izumi-Cosper-Ibuki combination, the "controller" in accordance with Izumi, including a "waveform decider," is implemented using a "microprocessor," in accordance with Ibuki. Pet., 50-52. The "direction signal d" generated by the "waveform decider" of the "controller," is thus received from the "microprocessor," directly informing the analysis of the "processor" of element [1.5.3]. Pet., 27-28; 50-52.

FISH.

EX1049, ¶20-21; EX1038, [0021], Reply, 9-10

DEMONSTRATIVE EXHIBIT – NOT EVIDENCE

Topics For Discussion

Issue 1: The Izumi Grounds Render Claim 1 Obvious

Issue 2:The Shahoian Grounds Render Claim 1 Obvious

- A POSITA would have been motivated to apply Cosper's teachings of multiple sensor feedback control to Shahoian
- Shahoian and Cosper are analogous art to the '767 Patent

Issue 3: "Directional-signal splitter/inverter" – (Claim 2)

Issue 4: "Vibration Sensor" Element – (Claim 3)

Issue 5: "Continuously monitors" Element – (Claim 3)

DEMONSTRATIVE EXHIBIT – NOT EVIDENCE

A POSITA would have been motivated to apply Cosper's teachings of multiple sensor feedback control to Shahoian

Petition - Shahoian-Cosper Combination:

achieve known benefits. APPLE-1003, ¶¶108-115. Shahoian's actuator outputs vibrations having amplitude and frequency controlled by a microprocessor. *See,* APPLE-1004, 7:29-54. Similar prior art systems, such as Cosper, demonstrated the conventional knowledge of using a feedback system to precisely monitor and control vibrations of the actuator. *Id.*

In the resulting system, Shahoian's module that provides haptic feedback would have included multiple sensors, such as sensors that "detect position, velocity, acceleration, etc.," or a "load or driving force," respectively, in accordance with Cosper. APPLE-1003, ¶¶109-110; APPLE-1009, [0049]-[0050]. The sensors would monitor the moving mass of the actuator during operation, and communicate detected sensor data to the microprocessor, which would in turn adjust a control signal to drive the actuator, thereby facilitating vibration according to desired characteristics. *Id.*

Pet. 14

DEMONSTRATIVE EXHIBIT – NOT EVIDENCE

A POSITA would have been motivated to apply Cosper's teachings of multiple sensor feedback control to Shahoian

Dr. Hannaford:

111. First, a POSITA would have been motivated to combine Shahoian and Cosper to achieve the benefit of enhancing the haptic performance of Shahoian's linear actuator. Shahoian describes that a drive waveform, provided by a microprocessor, is used to cause the actuator to produce a specific vibration output. APPLE-1004, 6:40-44; 7:29-53. Shahoian also recognizes the benefits of operating the actuator at resonance. *See, e.g.*, *id.*, 7:56-62. Based on my review of Shahoian and Cosper, a POSITA would have predictably looked to other teachings such as Cosper to further this objective, especially where Cosper explicitly describes driving an oscillating assembly based on continuous feedback control using feedback from multiple sensors. A POSITA would have recognized that

EX1003, ¶111; Pet. 15

DEMONSTRATIVE EXHIBIT – NOT EVIDENCE

A POSITA would have been motivated to apply Cosper's teachings of multiple sensor feedback control to Shahoian

Dr. Hannaford:

112. Second, a POSITA would have been led to combine Shahoian and Cosper to achieve the benefit of monitoring the real-time movement of the actuator with a high level of resolution and detail using multiple sensors. Based on my

hat

would

have facilitated control and output of vibration according to particular parameters, including parameters associated with preferred sensations for the user, even if external forces were acting on the device that. Relatedly, doing so would have rendered the vibrational output less susceptible to external forces on the system, such as whether the system is being held, moved, etc.

ing

Shahoian's system to include Cosper's feedback control would have facilitated consistent haptic output that elicits a particular (desired) sensation for the user.

er's

feedback control using multiple sensors would have been a common application of a known technique of "feedback input" from more than one sensor to a known linear actuator system. Based on my analysis, a POSITA would have recognized

Never disputed in Patent Owner Response

EX1003, ¶112-115; Pet. 15-18

DEMONSTRATIVE EXHIBIT – NOT EVIDENCE

A POSITA would have been motivated to apply Cosper's teachings of multiple sensor feedback control to Shahoian

Dr. Hannaford:

115. Implementing Shahoian's module in accordance with Cosper's feedback control using multiple sensors would have been a common application of a known technique of "feedback input" from more than one sensor to a known linear actuator system. Based on my analysis, a POSITA would have recognized that applying Cosper's suggestions to Shahoian's module would not have significantly altered or hindered the functions performed by Shahoian's module. Moreover, based on my knowledge and experience in the field, a POSITA would have found making the proposed modifications to be straightforward. The resonant system architectures in Shahoian and Cosper and similar. For example, Cosper's sensors and control system is specifically designed for use in resonant systems that involve a linearly moving mass, including reciprocal electromagnetic drivers, like that of Shahoian. *E.g.*, APPLE-1009, [0048], [0101]; APPLE-1004, 2:32-33, 8:34-39. And the use of feedback control in haptic systems was known. APPLE-1007, 1:39-47.

EX1003, 115; Pet., 17-18

DEMONSTRATIVE EXHIBIT – NOT EVIDENCE

A POSITA would have been motivated to apply Cosper's teachings of multiple sensor feedback control to Shahoian

Shahoian:

The actuator **100** operates by producing a force on the magnet head **105** in the linear directions indicated by arrows **114** when a current is flowed through the coil **104**. The

present invention provides several features. Flexures **120** are coupled between the grounded core **102** and the moving magnet head **105**, and can flex in the directions shown to allow motion of the magnet head **105** in its linear degree of freedom. The flexures can flex to allow the magnet head to

Microprocessor **26** can receive signals from sensors **28** and provide signals to actuators **30** of the interface device **14** in accordance with instructions provided by host computer **12** over bus **24**. For example, in a preferred local control

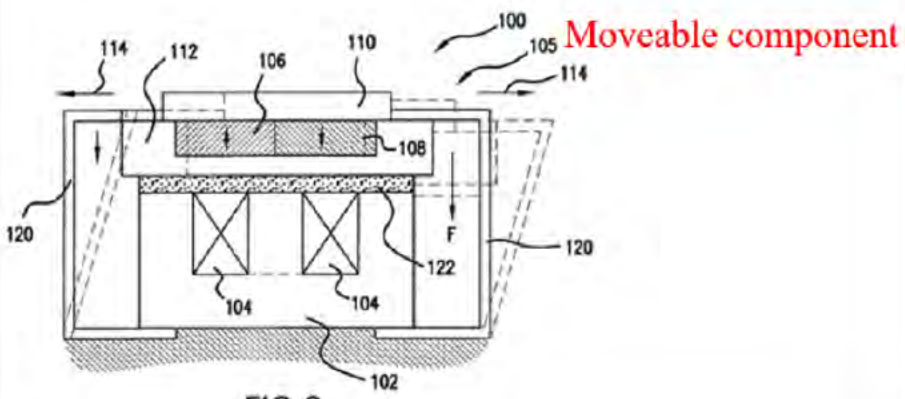

FIG.2

Cosper:

[0003] This application generally relates to systems and methods for control of a mass and bias (e.g., "elastomeric members") subassembly, including oscillating mechanical systems, that operate in an oscillatory mode at or near their mechanical resonant frequency. In one example, the systems are described for use with illumination systems including an oscillating resonant engine.

bly system. In general, the control system **10** described herein includes control logic (e.g., hardware, software, firmware, or combinations thereof included with a controller or control circuit **12**), a sensor **14** for determining a parameter from the moveable subassembly (e.g., including a bias **16** and mass **18**), a sensor input for inputting the parameter into the control logic of control circuit **12**, and a control output from the control logic to drive the moveable subassembly at or near resonance via force transducer **20**.

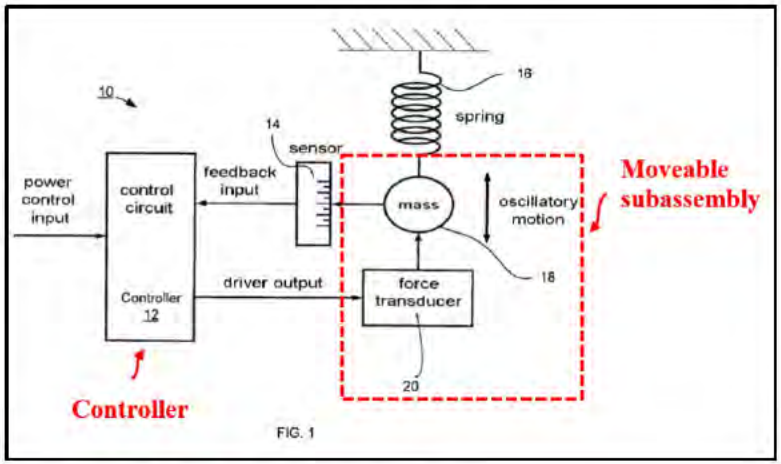

EX1004, 1:45-67, FIG. 2; EX1009, [0003], [0049], FIG. 1; EX1049, ¶16; Pet., 10-11, 20

FISH.
DEMONSTRATIVE EXHIBIT – NOT EVIDENCE

Topics For Discussion

Issue 1: The Izumi Grounds Render Claim 1 Obvious

Issue 2:The Shahoian Grounds Render Claim 1 Obvious

- A POSITA would have been motivated to apply Cosper's teachings of multiple sensor feedback control to Shahoian
- Shahoian and Cosper are analogous art to the '767 Patent

Issue 3: "Directional-signal splitter/inverter" – (Claim 2)

Issue 4: "Vibration Sensor" Element – (Claim 3)

Issue 5: "Continuously monitors" Element – (Claim 3)

DEMONSTRATIVE EXHIBIT – NOT EVIDENCE

Shahoian and Cosper are analogous art to the '767 Patent

Patent Owner Response:

A. No Motivation To Combine (All Grounds)

Each ground of the -00697 IPR requires combining Shahoian with Cosper, in some cases with additional references as well. Cosper is from a different field of endeavor than Shahoian and is not pertinent to the problems being addressed in Shahoian. For these reasons, Shahoian and Cosper are not analogous art that could be combined to demonstrate obviousness. (Ex. 2009, ¶ 79.) Even if they were considered to be analogous art, the differences between them mean that a POSITA would not be motivated to combine them as proposed by the petition. (*Id.*)

POR, 9; Reply, 9

DEMONSTRATIVE EXHIBIT – NOT EVIDENCE

Shahoian and Cosper are analogous art to the '767 Patent

'767 Patent:

TECHNICAL FIELD

The present invention is related to vibration-generating devices and, in particular, to vibration modules that can be incorporated into a wide variety of different types of electro-mechanical devices and systems to produce vibrations of selected amplitudes and frequencies over a wide range amplitude/frequency space.

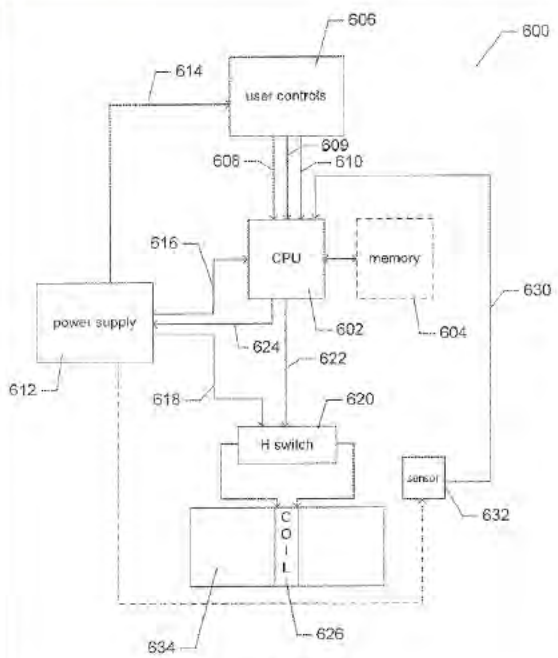

FIGURE 6

Shahoian:

A moving magnet actuator for providing haptic feedback. The actuator includes a grounded core member, a coil is wrapped around a central projection of the core member, and a magnet head positioned so as to provide a gap between the core member and the magnet head. The magnet head is moved in a degree of freedom based on an electromagnetic force caused by a current flowed through the coil. An elastic

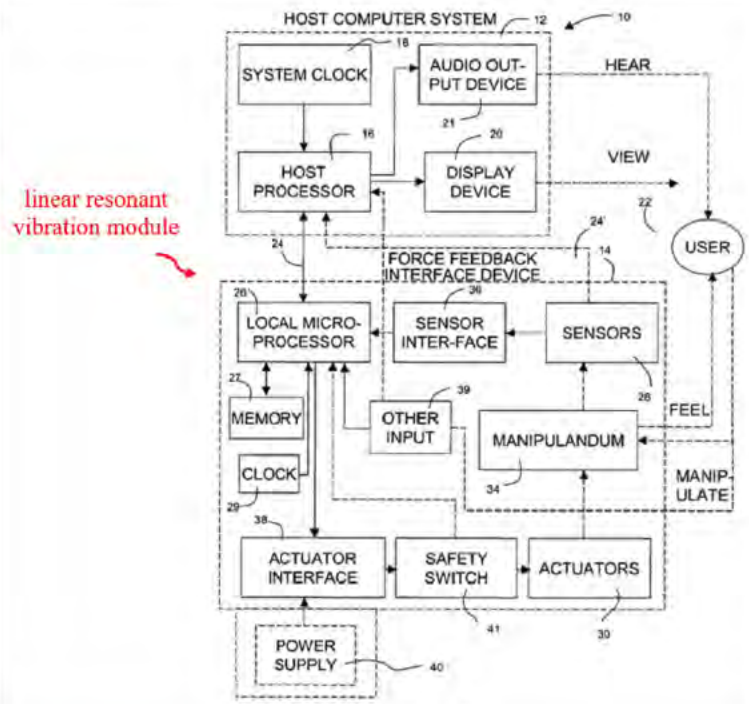

Figure 1

EX1001, 1:11-16; FIG. 6; EX1005, Abstract, FIG. 1; Pet. 7, 19; Reply, 3

FISH.

DEMONSTRATIVE EXHIBIT – NOT EVIDENCE

Shahoian and Cosper are analogous art to the '767 Patent

'767 Patent:

TECHNICAL FIELD

The present invention is related to vibration-generating devices and, in particular, to vibration modules that can be incorporated into a wide variety of different types of electro-mechanical devices and systems to produce vibrations of selected amplitudes and frequencies over a wide range amplitude/frequency space.

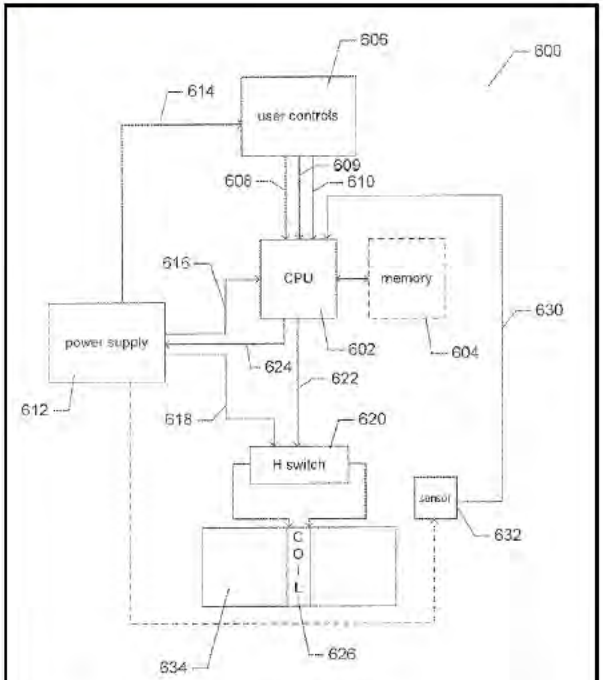

FIGURE 6

Cosper:

[0003] This application generally relates to systems and methods for control of a mass and bias (e.g., "elastomeric members") subassembly, including oscillating mechanical systems, that operate in an oscillatory mode at or near their mechanical resonant frequency. In one example, the systems are described for use with illumination systems including an oscillating resonant engine.

[0012] Any appropriate subassembly may be used with the systems and methods described herein. For example, a controller (including a control circuit) as described herein may be

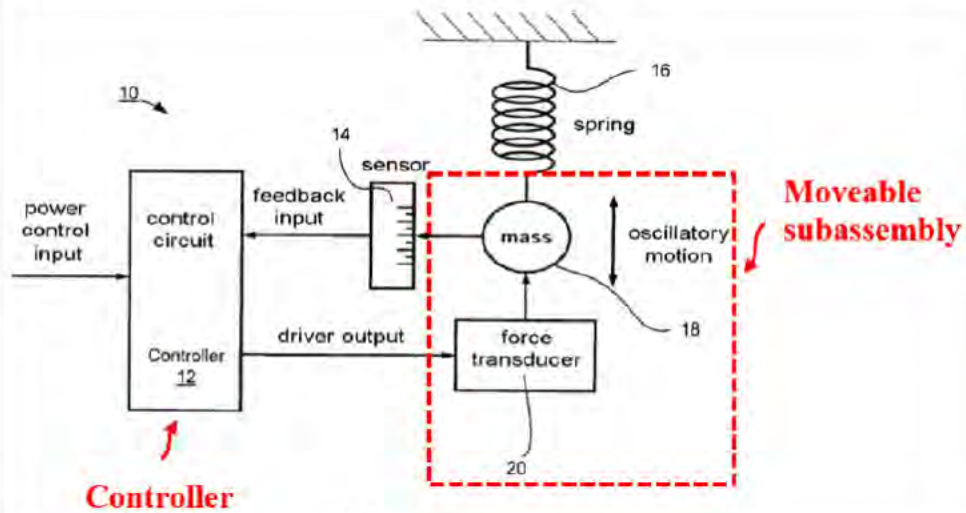

FIG. 1

EX1001, 1:11-16; FIG. 6; EX1009, [0003], [0012], FIG. 1; Pet. 12-13; Reply, 3

DEMONSTRATIVE EXHIBIT – NOT EVIDENCE

Shahoian and Cosper are analogous art to the '767 Patent

'767 Patent:

Because of the above-discussed disadvantages with the commonly employed unbalanced-electric-motor vibration-generation units, designers, manufacturers, and, ultimately, users of a wide variety of different vibration-based devices, appliances, and systems continue to seek more efficient and capable vibration-generating units for incorporation into many consumer appliances, devices, and systems.

tions discussed above. First, unbalancing the shaft of an electric motor not only produces useful vibrations that can be harnessed for various applications, but also produces destructive, unbalanced forces within the motor that contribute to rapid deterioration of motor parts. Enormous care and effort

A second problem with unbalanced electric motors is that they are relatively inefficient at producing vibrational motion.

A third problem with unbalanced electric motors, discussed above, is that they generally produce elliptical vibrational modes. Although such modes may be useful in particu-

A fourth, and perhaps most fundamental, problem associated with using unbalanced electric motors to generate vibrations is that only a very limited portion of the total vibrational-force/frequency space is accessible to unbalanced electric motors. FIG. **3** shows a graph of vibrational three with respect

Shahoian:

the motor. These current implementations of vibrotactile feedback, however, tend to be limited and produce low-bandwidth vibrations that tend to all feel the same, regardless of the different events and signals used to command them. The vibrations that these implementations produce also cannot be significantly varied, thus severely limiting the force feedback effects which can be experienced by a user of the device.

The actuator **100** operates by producing a force on the magnet head **105** in the linear directions indicated by arrows **114** when a current is flowed through the coil **104**. The

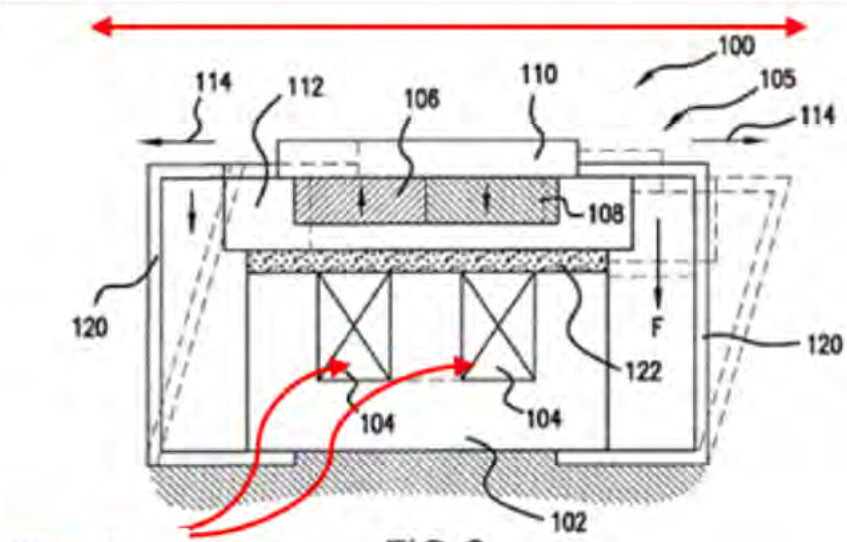

FIG.2

EX1001, 1:11-16; FIG. 6; EX1004, 1:45-67, FIG. 2; Pet. 22; Reply, 4

DEMONSTRATIVE EXHIBIT – NOT EVIDENCE

Shahoian and Cosper are analogous art to the '767 Patent

'767 Patent:

Because of the above-discussed disadvantages with the commonly employed unbalanced-electric-motor vibration-generation units, designers, manufacturers, and, ultimately, users of a wide variety of different vibration-based devices, appliances, and systems continue to seek more efficient and capable vibration-generating units for incorporation into many consumer appliances, devices, and systems.

tions discussed above. First, unbalancing the shaft of an electric motor not only produces useful vibrations that can be harnessed for various applications, but also produces destructive, unbalanced forces within the motor that contribute to rapid deterioration of motor parts. Enormous care and effort

A second problem with unbalanced electric motors is that they are relatively inefficient at producing vibrational motion.

A third problem with unbalanced electric motors, discussed above, is that they generally produce elliptical vibrational modes. Although such modes may be useful in particu-

A fourth, and perhaps most fundamental, problem associated with using unbalanced electric motors to generate vibrations is that only a very limited portion of the total vibrational-force/frequency space is accessible to unbalanced electric motors. FIG. 3 shows a graph of vibrational three with respect

Cosper:

[0009] The present invention discloses systems and methods for automatically driving (e.g., controlling energy applied) and maintaining oscillation of an assembly including a mass and a bias member (which may also be referred to as a spring or elastomeric member) at a resonant frequency. In one example, apparatus for maintaining oscillation of a moveable subassembly including a mass and bias comprises a controller operable to receive a signal from a sensor associated with a position or motion of the subassembly, and generate a drive signal for driving the subassembly in response to the received signal from the sensor. In this manner, the controller may monitor the motion of the subassembly and adjust or modulate the driving force over time to

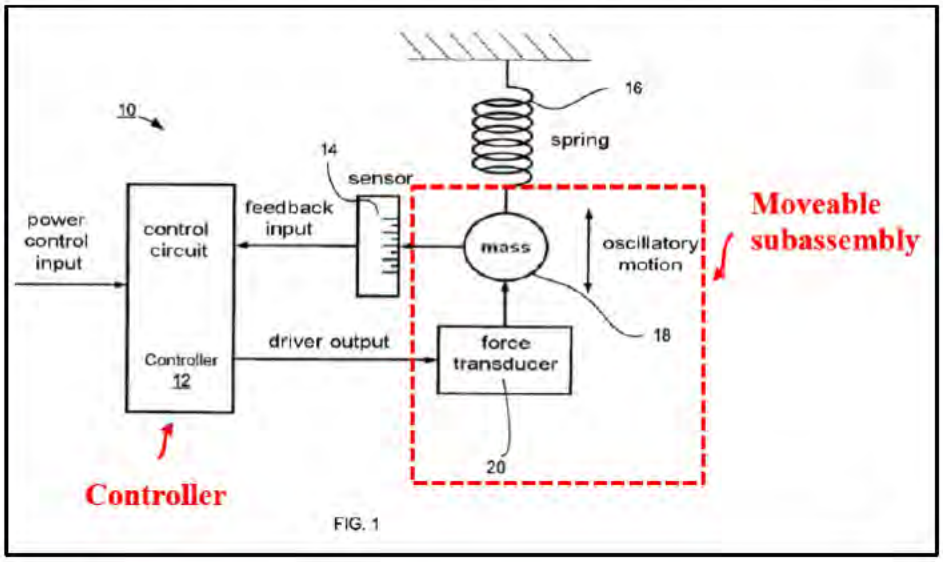

FIG. 1

EX1001, 1:11-16; FIG. 6; EX1004, 1:45-67, FIG. 2; Pet. 22; Reply, 4

DEMONSTRATIVE EXHIBIT – NOT EVIDENCE

Patent Owner's incorrect theory is directly contradicted by Shahoian's description

Patent Owner:

> When Shahoian mentions the gain due to operating near resonance, it describes it as an effect that must be counteracted in order to achieve the desired "flat" frequency response, not a desirable effect to take advantage of (Ex. 1004 at 7:54–62; Ex. 2009, ¶ 83):

Shahoian:

> The linear actuator **100** provides a greater magnitude of vibrations at higher frequencies (assuming the waveform magnitude is held constant). This gain at higher frequencies is due primarily to the vibration occurring at the resonance frequency of the mechanical system including actuator, foam, housing, etc., and, if desired, can be compensated for in other embodiments to obtain a more flat response by providing compensating frequencies that will provide the desired response (e.g. from a look-up table or firmware).

EX1004, 7:54-62; POR, 11; Reply, 8-9

DEMONSTRATIVE EXHIBIT – NOT EVIDENCE

Patent Owner's incorrect theory is directly contradicted by Shahoian's description

Dr. Hannaford:

APPLE-1004, 7:54-62 (emphasis added). Patent Owner's theory that Shahoian teaches gain from resonance "must be" counteracted to achieve a desired response (POR, 11) is simply contrary to Shahoian's express teaching that the gain "can be" compensated for "if desired." A POSITA would have recognized from Shahoian and Cosper the predictable benefits of leveraging such gain, such as where a larger vibration output is desired, in an efficient manner. Pet., 14-18. For example, a POSITA would have recognized from Shahoian and Cosper the predictable benefit of leveraging the gain to achieve a greater magnitude of vibration output in an energy efficient manner.

THE WITNESS: I think this paragraph is simply laying out properties -- actually well-known ones to a POSITA -- of resonance, and if resonant behavior was not desired, then it offers a way to change that; but implicitly, if resonance is desired, it talks about that mode as well.

EX1049, ¶17; EX2011, 31:14-19; Reply, 8-9

DEMONSTRATIVE EXHIBIT – NOT EVIDENCE

Topics For Discussion

Issue 1: The Izumi Grounds Render Claim 1 Obvious

Issue 2:The Shahoian Grounds Render Claim 1 Obvious

Issue 3: “Directional-signal splitter/inverter” – (Claim 2)

Issue 4: “Vibration Sensor” Element – (Claim 3)

Issue 5: “Continuously monitors” Element – (Claim 3)

DEMONSTRATIVE EXHIBIT – NOT EVIDENCE

The combination renders obvious "a second switch of the pair controlled by internal signal $\bar{d}$"

'767 Patent - Claim 2:

a directional-signal splitter/inverter that generates two complementary internal signals, d and $\bar{d}$, corresponding to directional-signal d; and

two pairs of solid-state switches, a first switch of each pair controlled by internal signal d and a second switch of the pair controlled by internal signal $\bar{d}$, that apply the input voltage in a first direction to the driving component when the d is in a first voltage state and that apply the input voltage in a second direction to the driving component when the d is in a second voltage state.

EX1001, cl. 2

DEMONSTRATIVE EXHIBIT – NOT EVIDENCE

The combination renders obvious "a second switch of the pair controlled by internal signal $\bar{d}$"

Rossi:

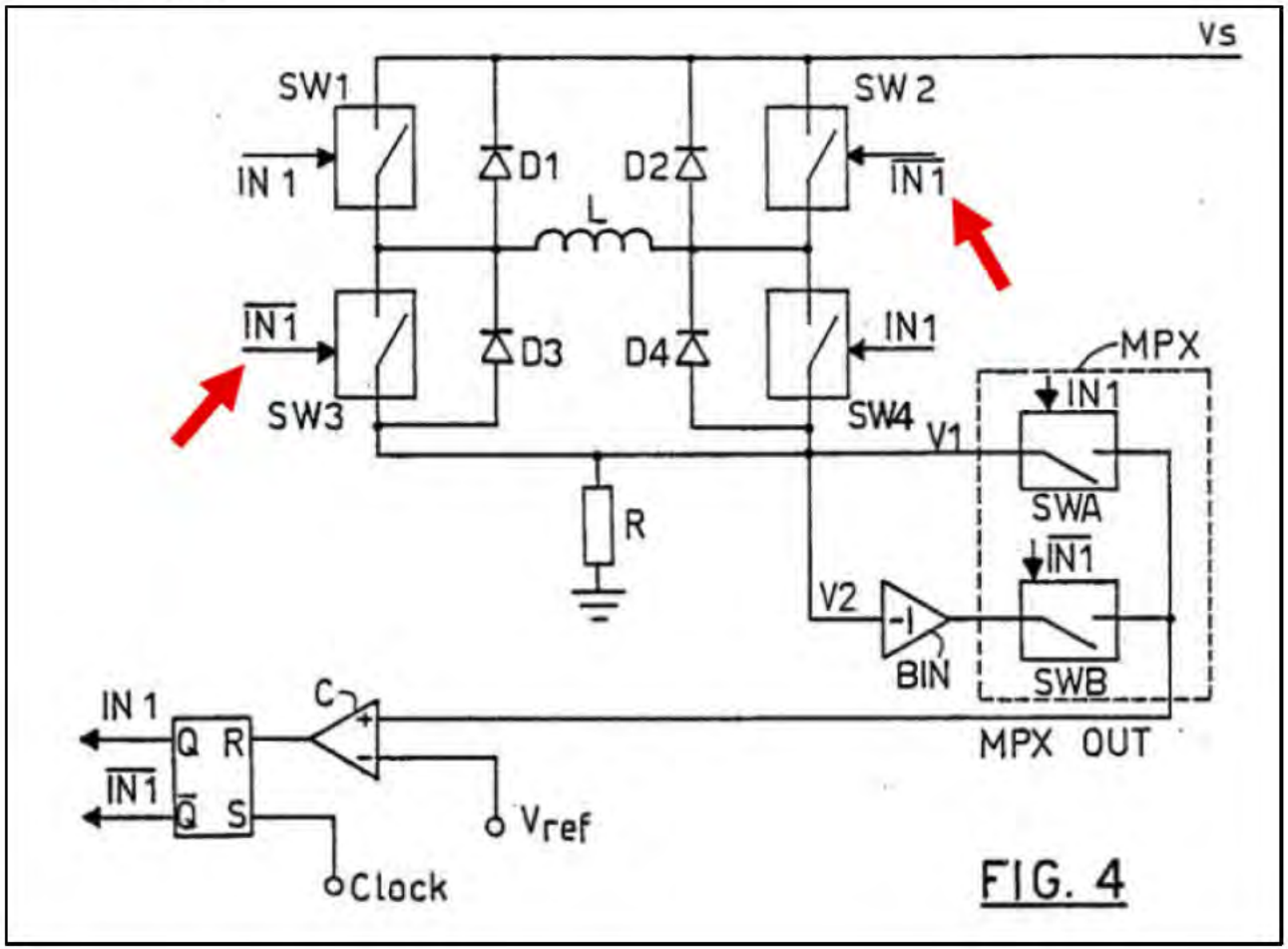

EX1020, FIG. 4; Pet., 32

FISH.

DEMONSTRATIVE EXHIBIT – NOT EVIDENCE

The combination renders obvious "a second switch of the pair controlled by internal signal $\bar{d}$"

'767 Patent - Claim 2:

a directional-signal splitter/inverter that generates two complementary internal signals, d and $\bar{d}$, corresponding to directional-signal d; and

two pairs of solid-state switches, a first switch of each pair controlled by internal signal d and a second switch of the pair controlled by internal signal $\bar{d}$, that apply the input voltage in a first direction to the driving component when the d is in a first voltage state and that apply the input voltage in a second direction to the driving component when the d is in a second voltage state.

EX1001, cl. 2; EX1049, ¶26; Reply,

Dr. Hannaford:

26. Even if implemented using multiple splitter/inverter components (which a POSITA would not have been limited to), Patent Owner fails to demonstrate the claim language excludes such a configuration. As set forth in Element [2.4], a second switch of each pair (SW2 and SW3) is controlled by equivalent "driving signal $\overline{IN1}$", such that SW2 and SW3 are in a common state at the same time. "Driving signal $\overline{IN1}$" is input to both SW2 and SW3 and, as expressly indicated by Rossi, is the inverted signal of IN1. *See, e.g.*, APPLE-1020,

DEMONSTRATIVE EXHIBIT – NOT EVIDENCE

The combination renders obvious "a second switch of the pair controlled by internal signal $\bar{d}$"

Dr. Hannaford:

> Pet., 33. To be clear, a POSITA would have recognized that Rossi discloses use of the same signal as inputs to SW2 and SW3—Rossi uses the same label signal $\overline{IN1}$ for both signals. This alone provides independent support that the combination renders obvious "a second switch of the pair controlled by internal signal $\bar{d}$."

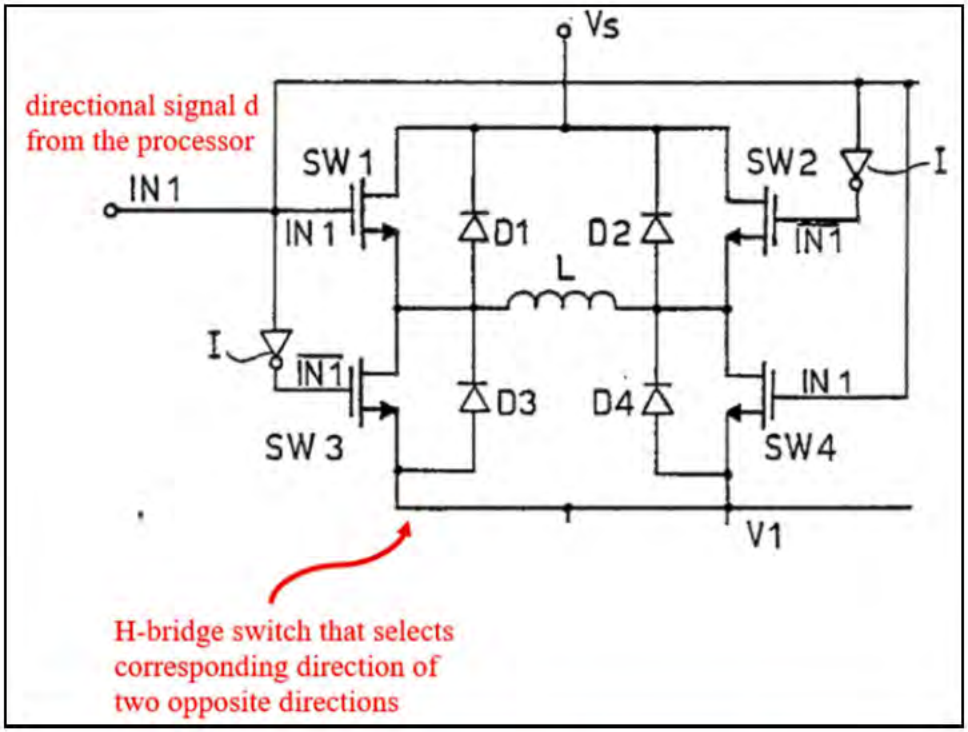

EX1049, ¶20; EX1020, FIG. 6
Reply, 11; Pet., 39

FISH.
DEMONSTRATIVE EXHIBIT – NOT EVIDENCE

Topics For Discussion

Issue 1: The Izumi Grounds Render Claim 1 Obvious

Issue 2:The Shahoian Grounds Render Claim 1 Obvious

Issue 3: “Directional-signal splitter/inverter” – (Claim 2)

Issue 4: “Vibration Sensor” Element – (Claim 3)

Issue 5: “Continuously monitors” Element – (Claim 3)

DEMONSTRATIVE EXHIBIT – NOT EVIDENCE

The combination renders obvious the module "further includes a vibration sensor"

'767 Patent – Claim 3:

> **3**. The linear resonant vibration module of claim **2**
> wherein the linear resonant vibration module further includes a vibration sensor; and
> wherein the control program continuously monitors output from the vibration sensor in order to adjust the frequency at which the control program changes the voltage state of the directional signal d.

Cosper:

> the motion of the subassembly may be derived). For example, one or more sensors **14** may detect position, velocity, acceleration, etc. for the subassembly (e.g., of bias **16** and/or mass **18**). In some variations, a sensor **14** is connected to a driver

EX1009, [0050]; -00697 Pet. 14, 45 -00698 Pet., 15, 45,

DEMONSTRATIVE EXHIBIT – NOT EVIDENCE

The combination renders obvious the module "further includes a vibration sensor"

Petition:

> The Izumi-Cosper-Rossi combination includes a vibration sensor (accelerometer in accordance with Cosper) in addition to the sensors associated with "position" and "velocity" that are used as part of the feedback control. *Supra*, §V.A.3 (Izumi-Cosper combination); APPLE-1003, ¶162. Like the accelerometer

Cosper:

> the motion of the subassembly may be derived). For example, one or more sensors **14** may detect position, velocity, acceleration, etc. for the subassembly (e.g., of bias **16** and/or mass **18**). In some variations, a sensor **14** is connected to a driver

EX1009, [0050]; -00697 Pet. 14, 45 -00698 Pet., 15, 45,

FISH.

DEMONSTRATIVE EXHIBIT – NOT EVIDENCE

The combination renders obvious the module "further includes a vibration sensor"

Dr. Hannaford:

measures the acceleration applied to it"). A POSITA would have recognized that Cosper discloses an accelerometer through its express description of a sensor that detects acceleration. *Id.* I note that Cosper not only recites use of a sensor that detects acceleration, but additionally lists a type of sensor—a "capacitive" sensor--of which an accelerometer is commonly constructed.

EX1001, cl. 2; -00697 EX1049, ¶28; -00697 Reply, 17; -00698 EX1049 35; -00698 Reply, 18

Topics For Discussion

Issue 1: The Izumi Grounds Render Claim 1 Obvious

Issue 2:The Shahoian Grounds Render Claim 1 Obvious

Issue 3: “Directional-signal splitter/inverter” – (Claim 2)

Issue 4: “Vibration Sensor” Element – (Claim 3)

Issue 5: “Continuously monitors” Element – (Claim 3)

DEMONSTRATIVE EXHIBIT – NOT EVIDENCE

The combination renders obvious wherein the control program "continuously monitors" output from the vibration sensor

'767 Patent:

3. The linear resonant vibration module of claim 2 wherein the linear resonant vibration module further includes a vibration sensor; and

wherein the control program continuously monitors output from the vibration sensor in order to adjust the frequency at which the control program changes the voltage state of the directional signal d.

waits for a next event. The remaining steps represent a continuously executing loop, or event handler, in which each event that occurs is appropriately handled by the control program. In certain implementations of the control program,

EX1001, 7:9-14; Pet. 46

FISH.

DEMONSTRATIVE EXHIBIT – NOT EVIDENCE

The combination renders obvious wherein the control program "continuously monitors" output from the vibration sensor

Dr. Goossen:

Are there other portions of '767 that inform kind of what it means to use continuous feedback control?

A. Well, I mean, it would have to be in the context of the control program.

And so, the control program is a set of software. You are running code, and it is operating a loop. And every time it goes through the loop, it would have to read in the output of the sensor.

Cosper:

system. In some variations, the control circuitry may include one or more feedback loops that determine resonance of the mirror subassembly based on sensing either the motion of the mirror subassembly and/or the back electromagnetic force (EMF). Thus, one or more sensors (e.g., optical sensors, electrical sensors, motion sensors, etc.) may be used to provide information to the control circuitry. As used herein, "circuitry" may be any appropriate circuitry, including hardware, software, firmware, or some combination thereof, and is not limited to PCBs.

EX1009, [0125]; -00697 Pet. 13, 68; -00698 Pet., 14, EX1050, 36:12-37:10

DEMONSTRATIVE EXHIBIT – NOT EVIDENCE

The combination renders obvious wherein the control program "continuously monitors" output from the vibration sensor

Petition:

A POSITA would have been motivated to implement a feedback control algorithm in Izumi-Cosper-Ibuki's system as taught by Aldrich. APPLE-1003, ¶180. In the combined system, the sensor outputs would have been received and processed by the microprocessor using a "hill-climbing control algorithm … to find and remain within the vicinity of the resonance," in accordance with Aldrich's suggestions. APPLE-1021, 2. Implementing Aldrich's algorithm as a control program for applying continuous feedback control about a resonant frequency would have been a routine application of known software coding techniques. APPLE-1003, ¶181.

-00697 Pet., -00698 Pet., 57

DEMONSTRATIVE EXHIBIT – NOT EVIDENCE