US 20150208897A1

(19) United States
(12) Patent Application Publication
KANGAS et al.
(10) Pub. No.: US 2015/0208897 A1
(43) Pub. Date: Jul. 30, 2015

(54) **DISHWASHER**

(71) Applicant: **Whirlpool Corporation**, Benton Harbor, MI (US)

(72) Inventors: **WILLIAM K. KANGAS**, BUCHANAN, MI (US); **PRAVEEN POOJARY**, SAINT JOSEPH, MI (US); **MICHAEL S. SEELEY**, SOUTH HAVEN, MI (US); **BLAYNE C. SMITH**, SAINT JOSEPH, MI (US)

(73) Assignee: **Whirlpool Corporation**, Benton Harbor, MI (US)

(21) Appl. No.: **14/164,557**

(22) Filed: **Jan. 27, 2014**

Publication Classification

(51) **Int. Cl.**
A47L 15/42 (2006.01)

(52) **U.S. Cl.**
CPC *A47L 15/4295* (2013.01); *A47L 15/4219* (2013.01)

(57) **ABSTRACT**

A dishwasher for treating dishes includes a tub at least partially defining a treating chamber, a spraying system having a distribution header and at least one aperture provided on the distribution header for spraying wash liquid into the treating chamber, and a recirculation system for recirculating liquid sprayed in the treating chamber to the spraying system. A light assembly is provided on the distribution header, and includes a light source that emits light to a light guide, which in turn distributes light to the treating chamber.

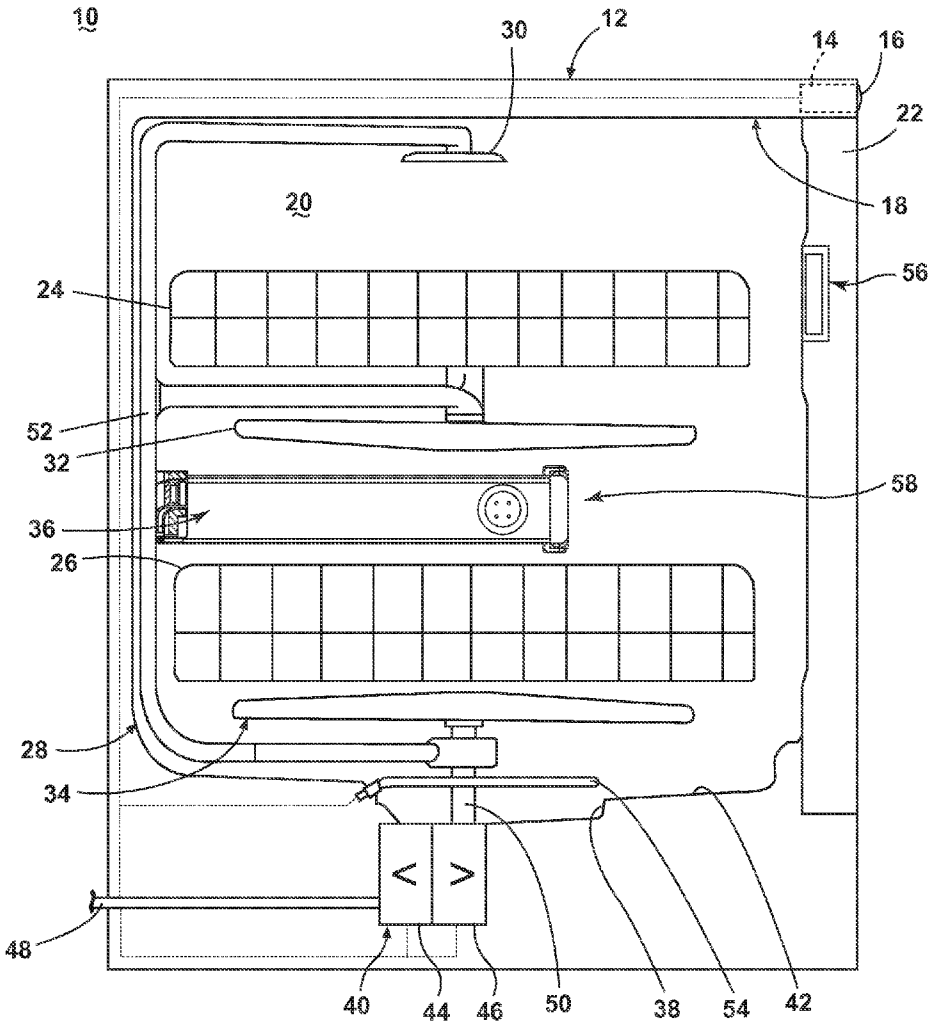

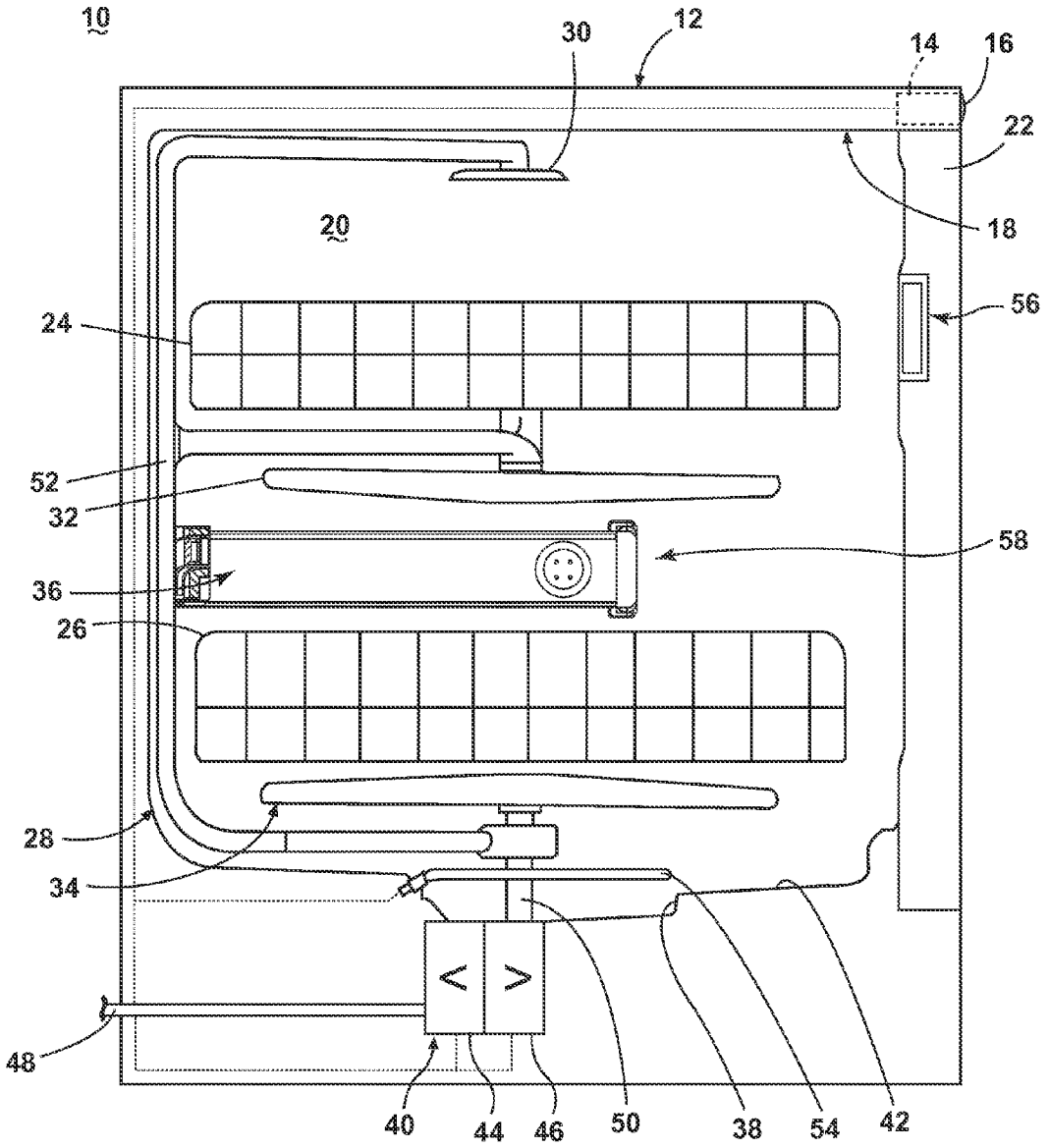
10
30
12
14
16
22
18
20
56
24
52
32
58
36
26
28
34
48
40
44
46
50
38
54
42

FIG. 1

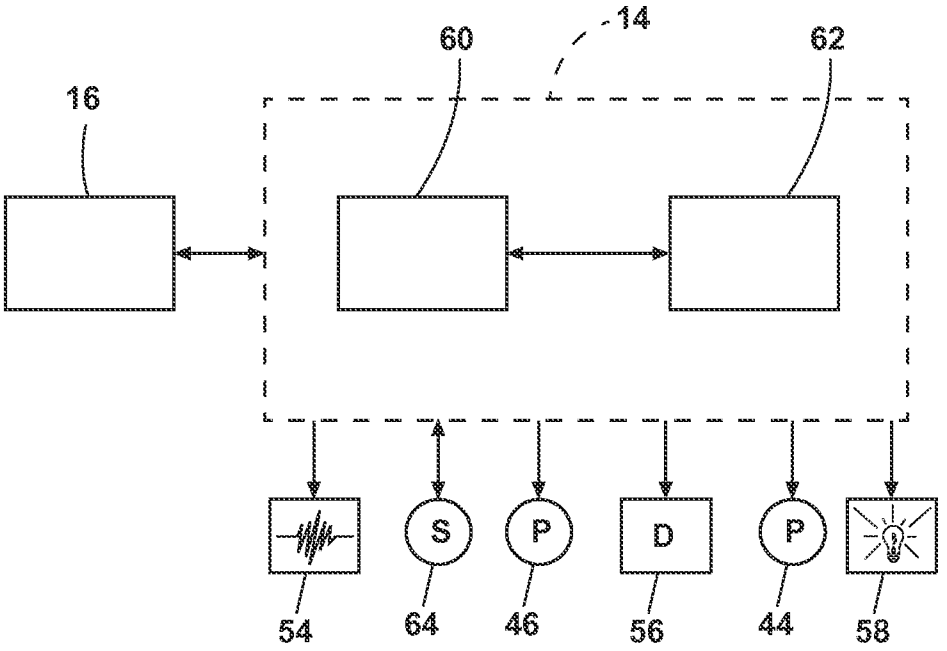

FIG. 2

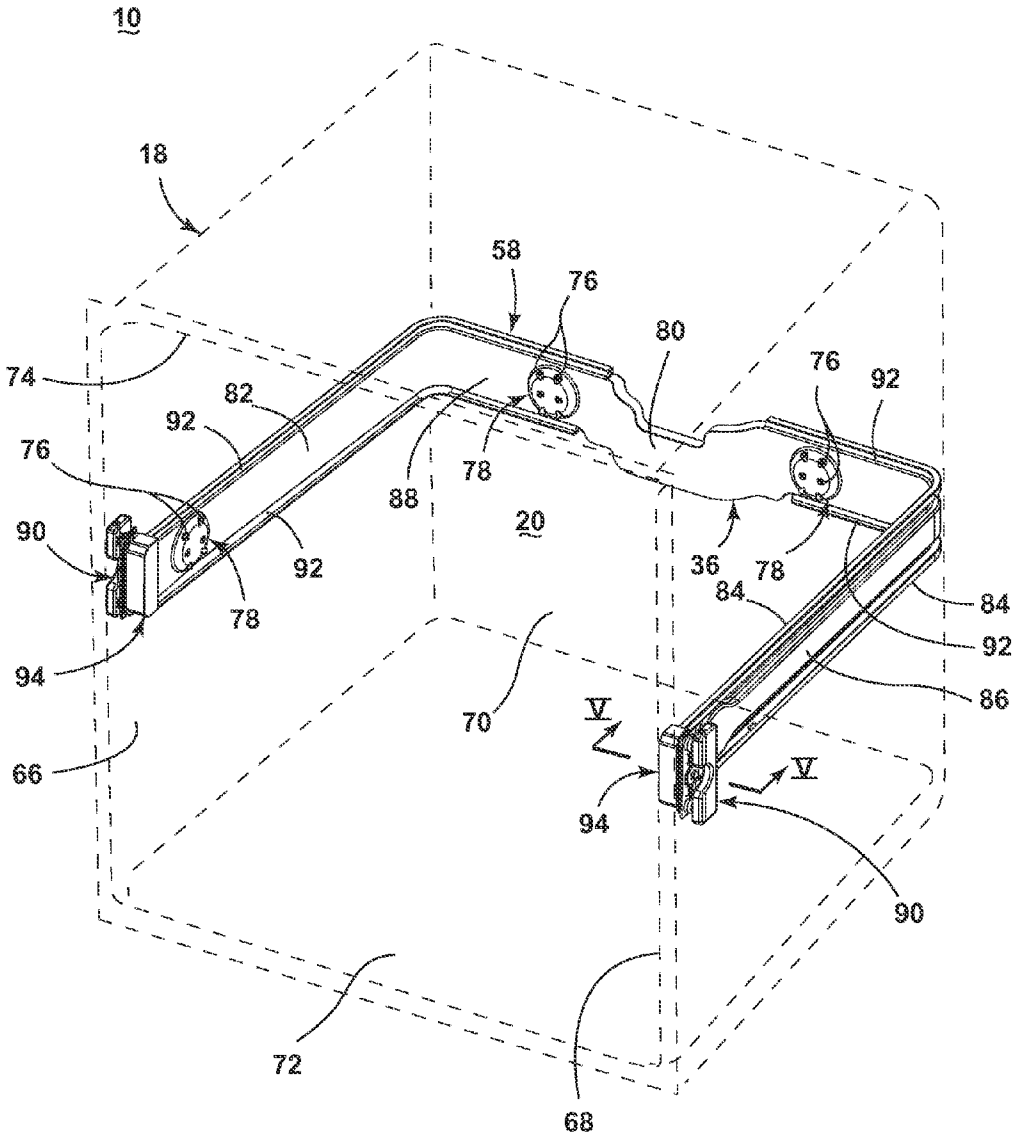
10
18
58
76
80
76
92
74
82
92
76
88
78
20
90
92
36
78
84
84
78
92
94
86
70
V
66
V
94
90
72
68

FIG. 3

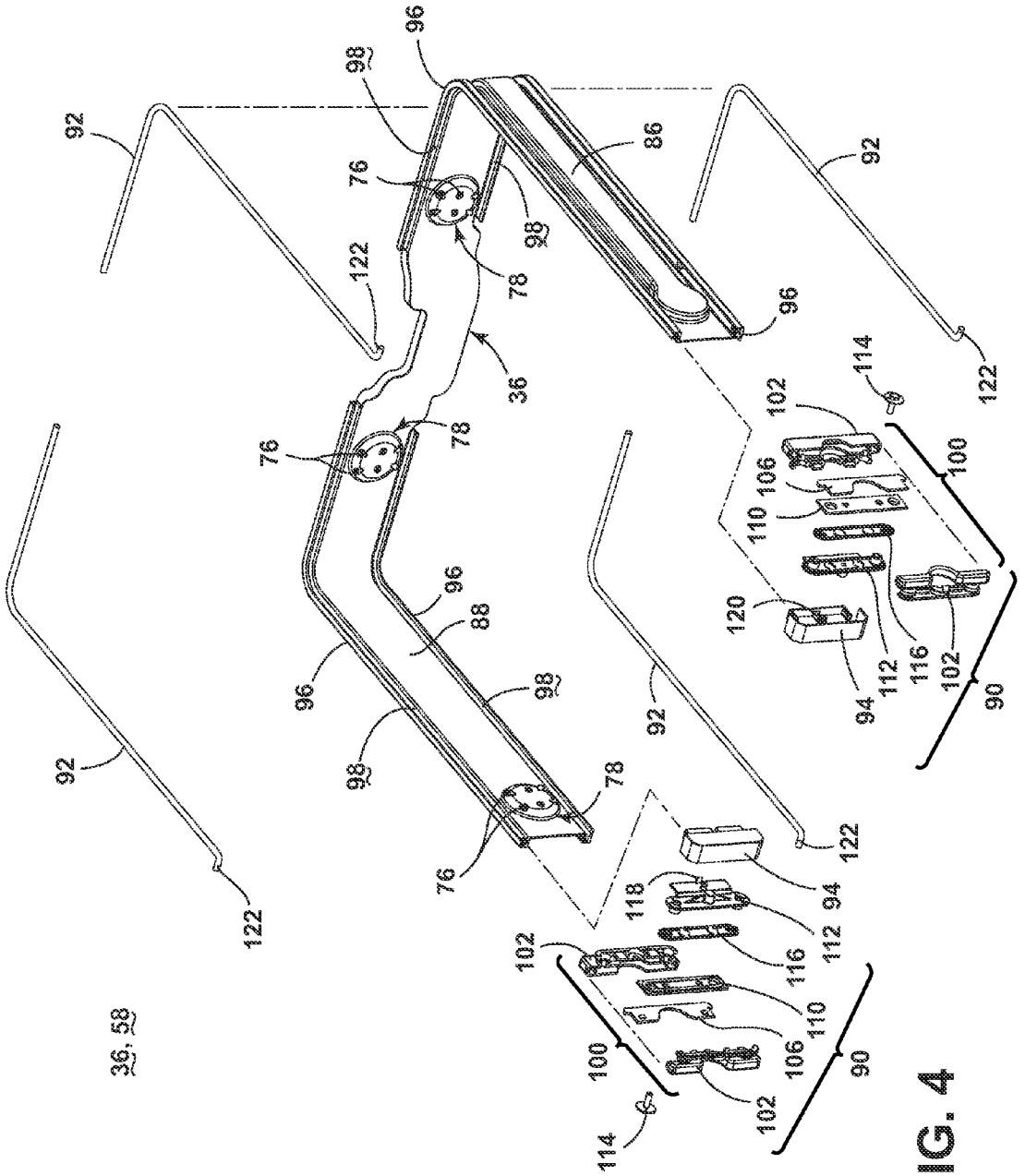
36, 58
92
96
98
76
78
86
122
36
88
102
106
110
114
100
120
112
116
94
90
118

FIG. 4

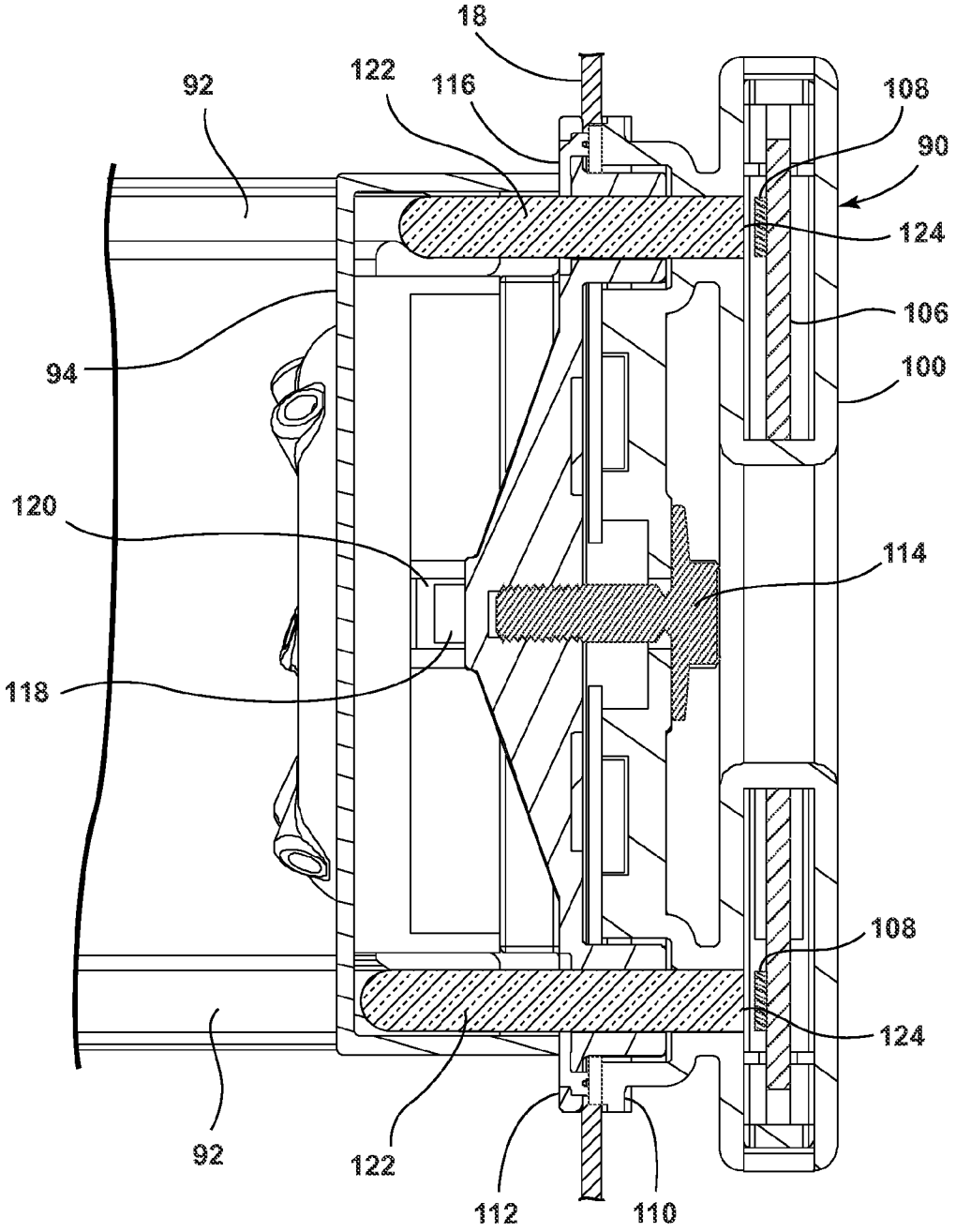
18
122
116
92
108
90
124
106
94
100
120
114
118
108
124
92
122
112
110

FIG. 5

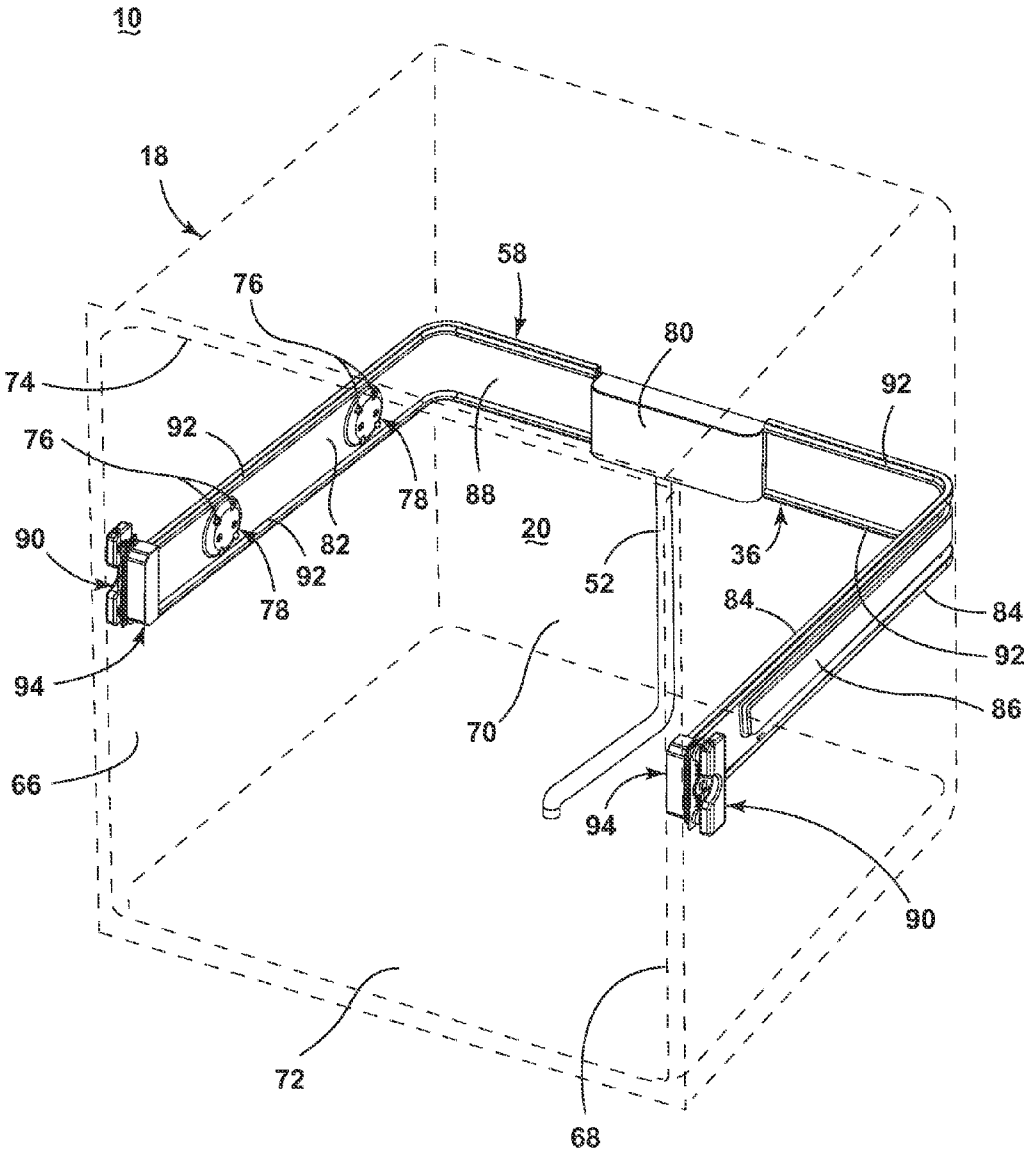
10
18
58
76
80
74
92
76
92
78
88
82
20
36
90
92
52
78
84
84
92
94
86
70
66
94
90
72
68

FIG. 6

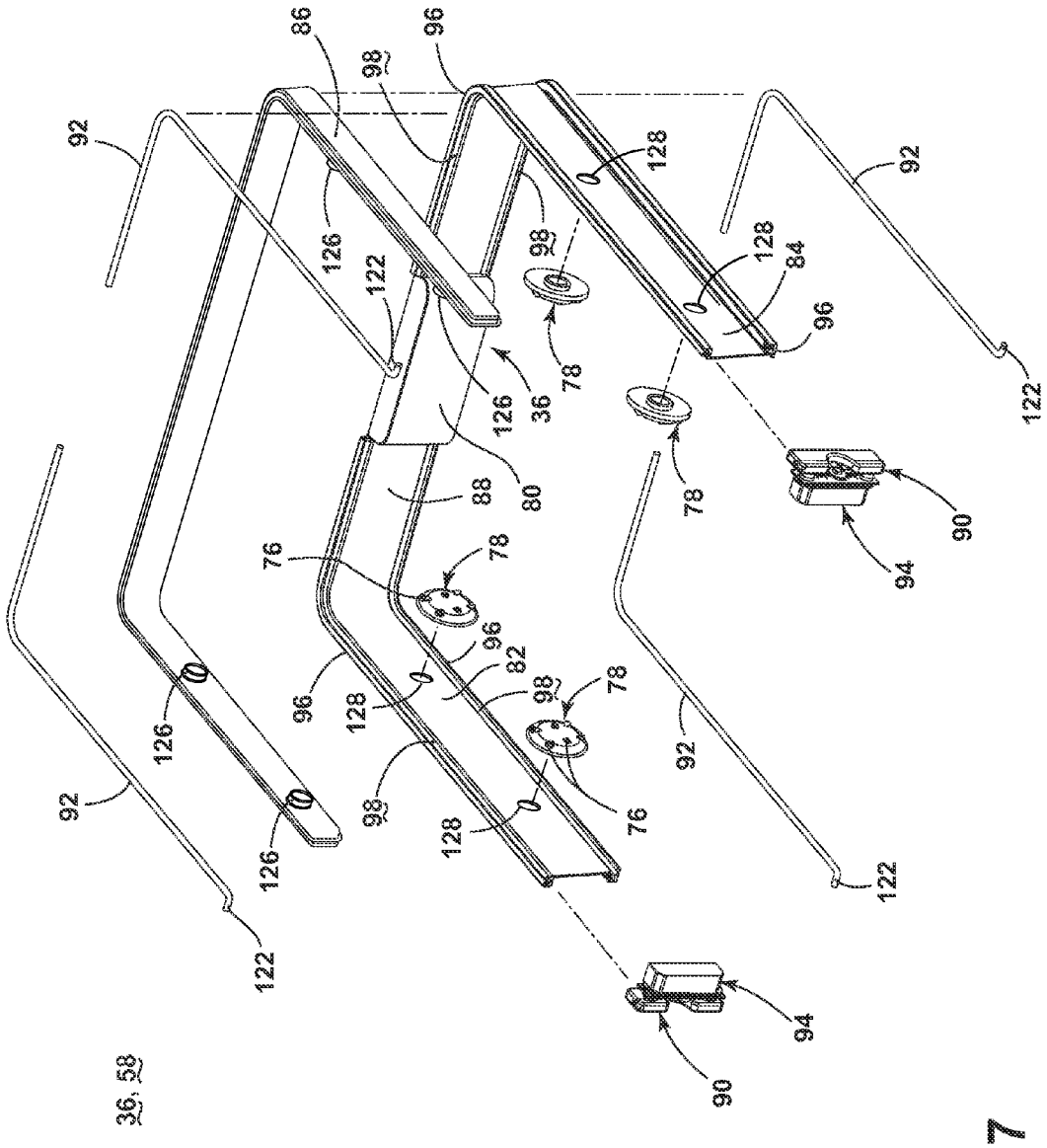

FIG. 7

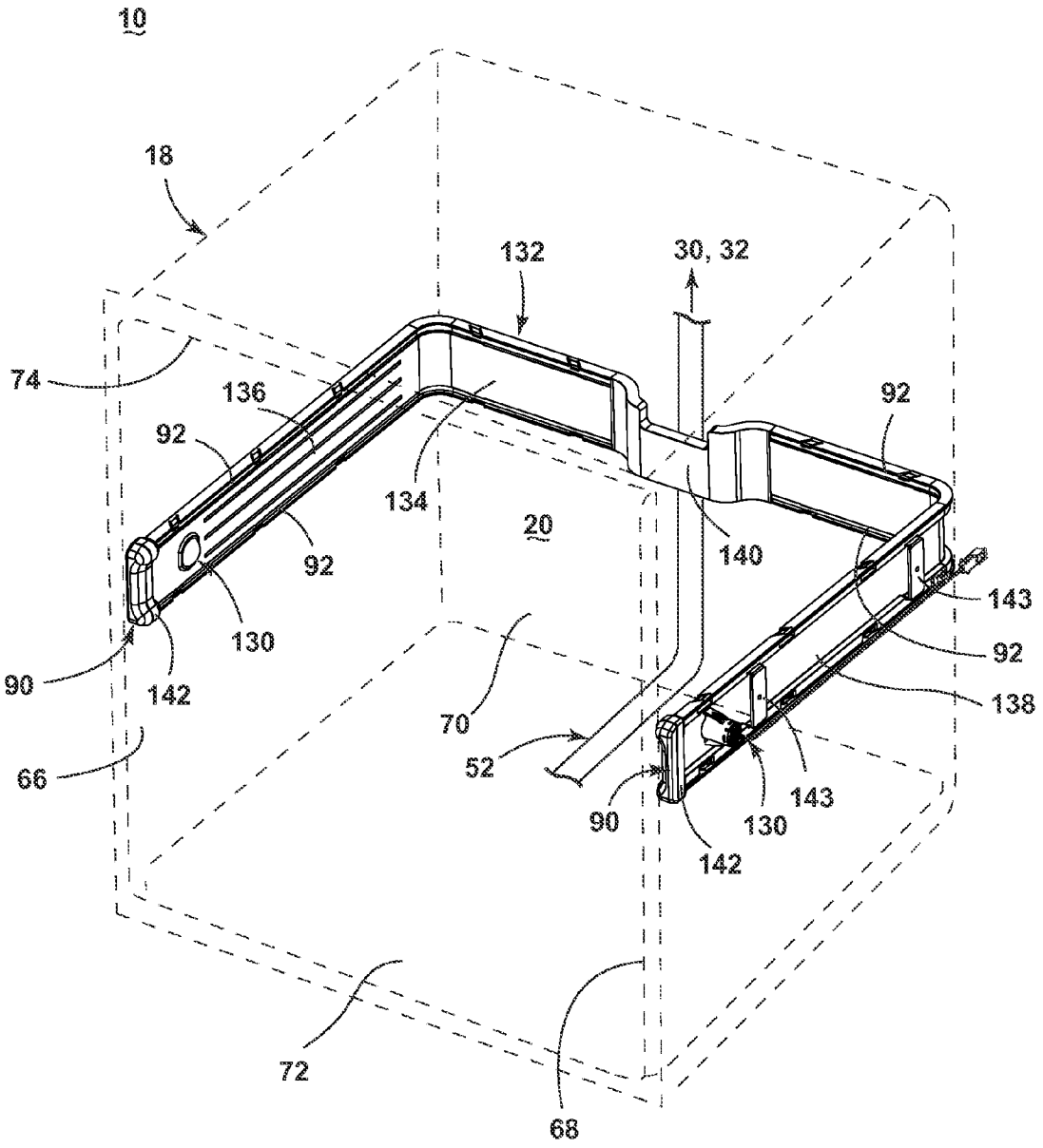
10
18
132
30, 32
74
136
92
92
134
20
140
92
143
92
138
130
90
142
70
52
66
90
130
143
142
72
68

FIG. 8

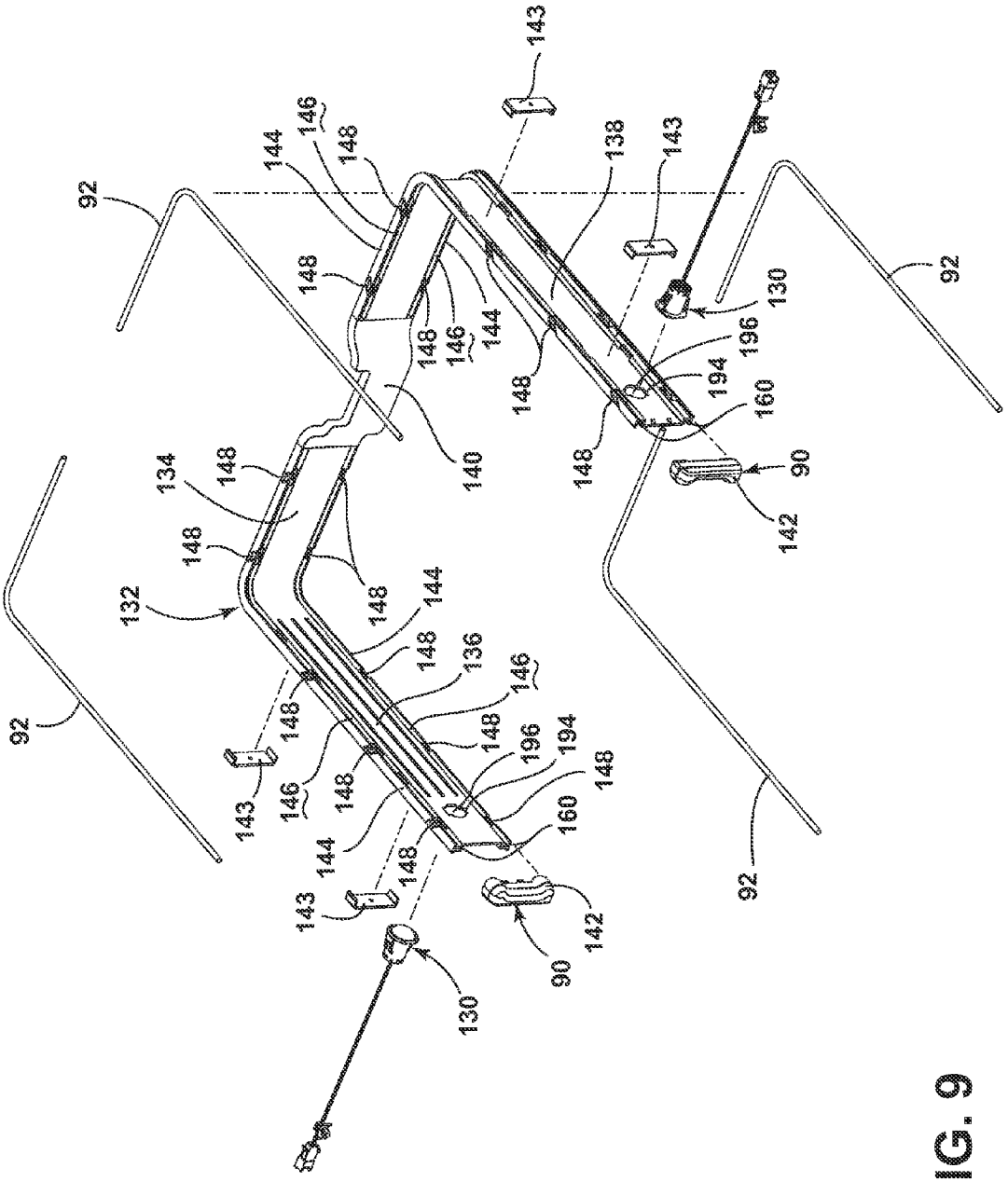

FIG. 9

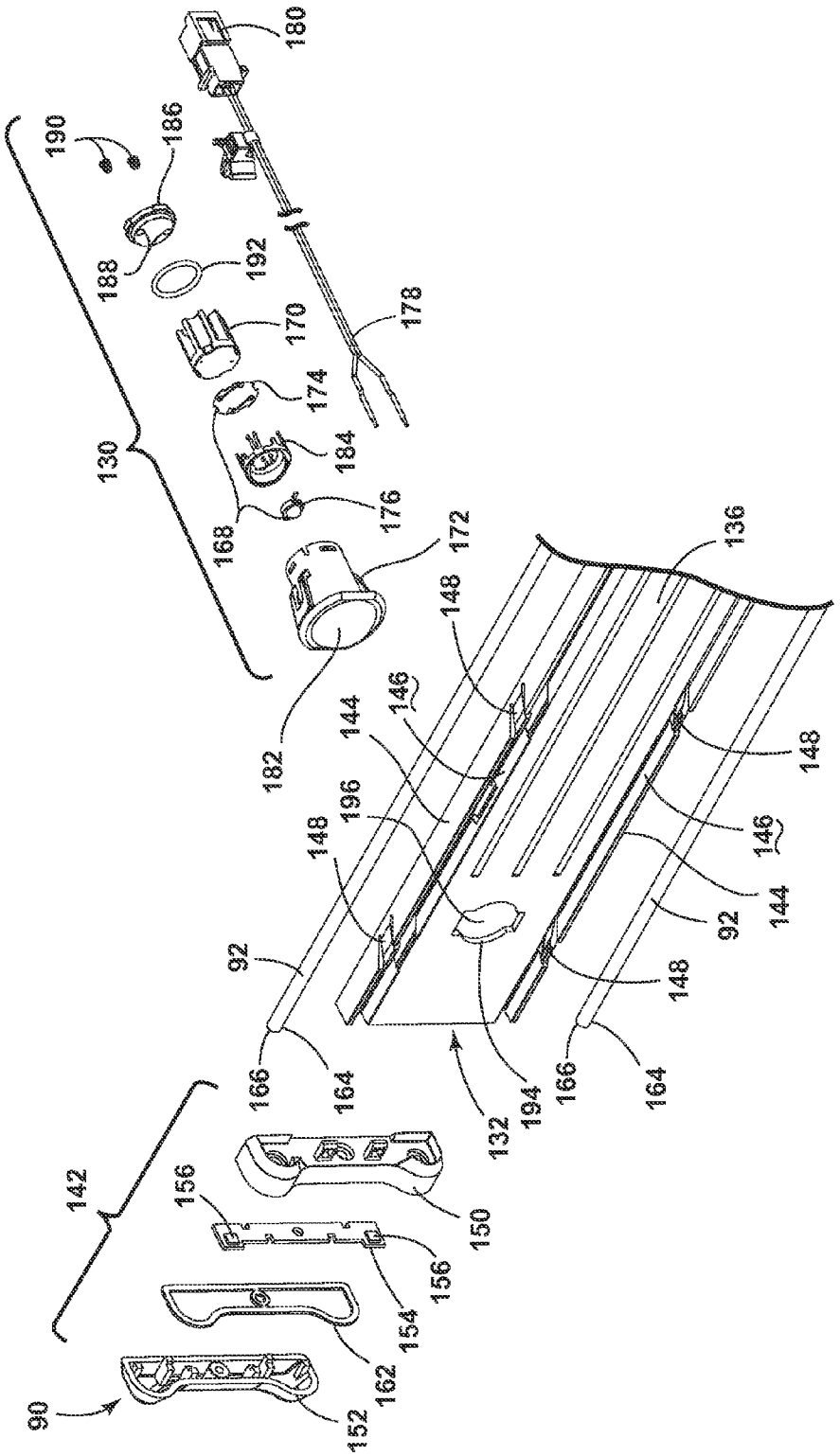
180
190
186
188
192
170
178
174
130
184
176
168
172
136
148
182
146
144
196
148
92
166
164
132
194
142
156
150
154
162
90
152

FIG. 10

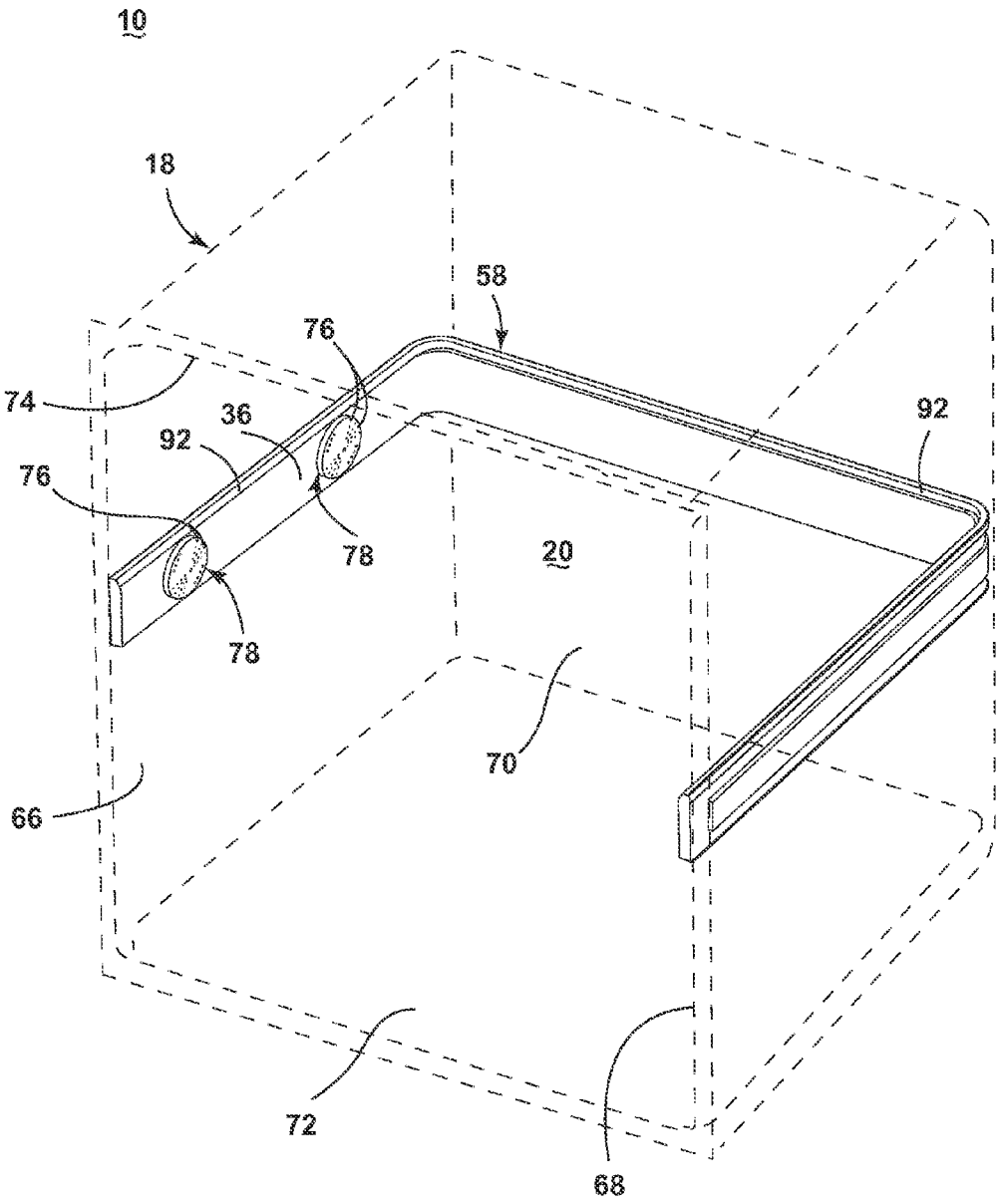

FIG. 11

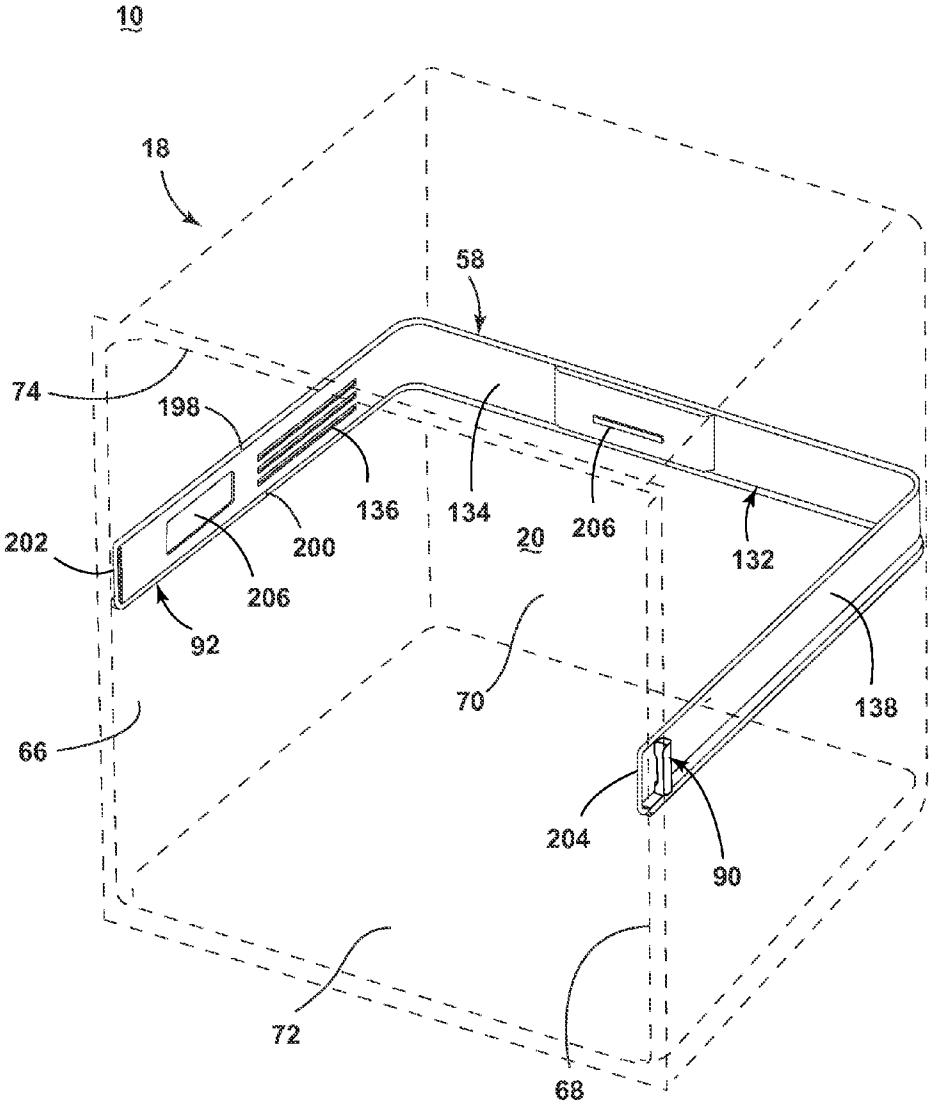
10
18
58
74
198
136
134
206
132
202
200
20
206
92
70
138
66
204
90
72
68

FIG. 12

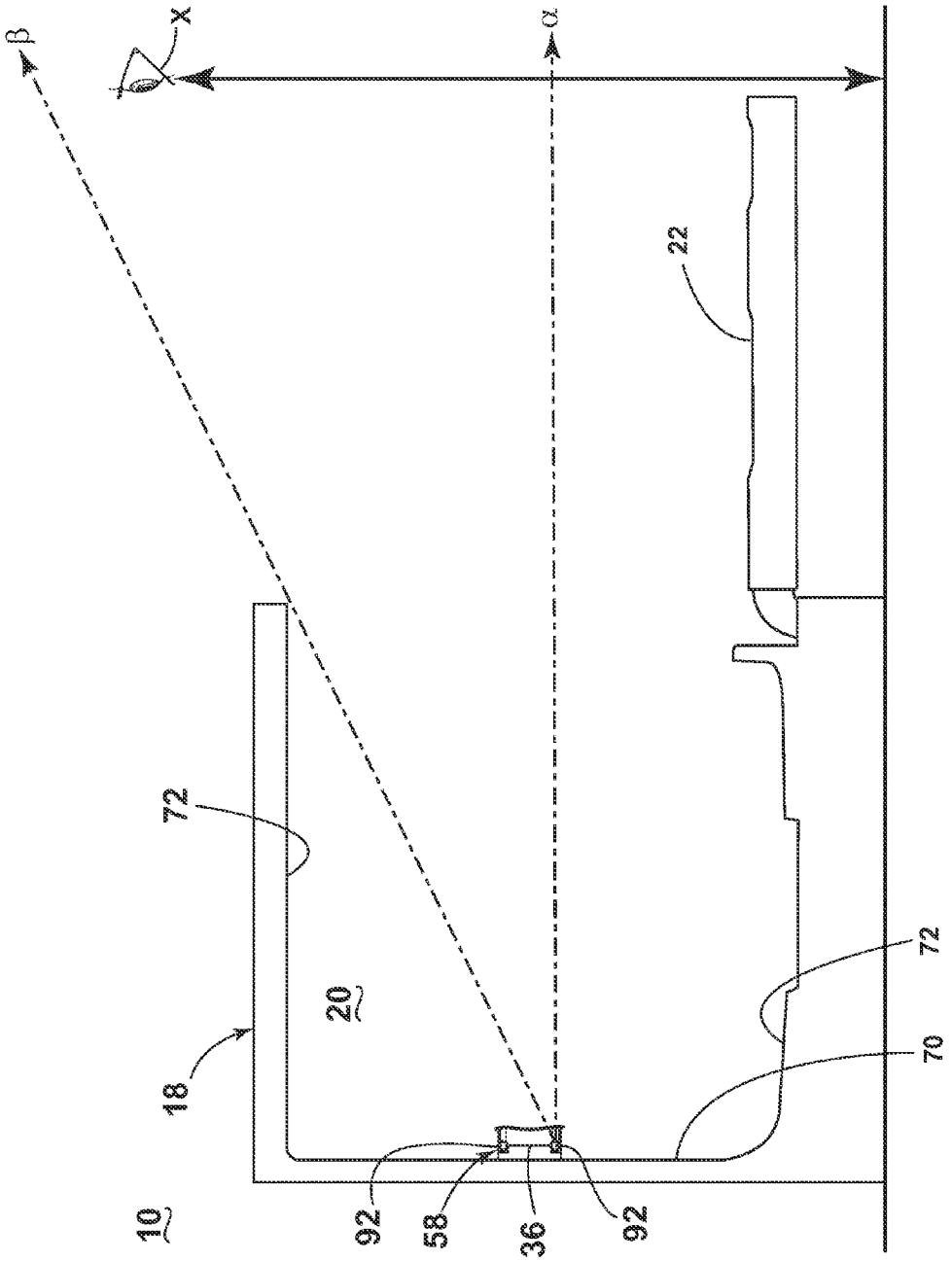

FIG. 13

DISHWASHER

BACKGROUND OF THE INVENTION

[0001] Contemporary automatic dishwashers for use in a typical household include a tub and at least one rack or basket for supporting soiled dishes within the tub. A spraying system may be provided for recirculating liquid throughout the tub to remove soils from the dishes. The treating chamber of the dishwasher can be illuminated, such as by providing a light on the interior of the dishwasher. For example, existing lighting solutions place a single point of light on a wall of the tub, which does not evenly illuminate all areas of the treating chamber or provide high aesthetic value. Other existing solutions place multiple lights inside the dishwasher, but this requires that the entire lighting assembly be sealed to prevent moisture from reaching any of the electronics of the lights.

BRIEF DESCRIPTION OF THE INVENTION

[0002] The invention relates to a dishwasher for treating dishes according to an automatic cycle of operation. In one aspect of the invention, the dishwasher includes a tub at least partially defining a treating chamber and having an open face providing access to the treating chamber, a cover selectively closing the open face, a spraying system including a distribution header and at least one aperture provided on the distribution header for spraying wash liquid into the treating chamber, a recirculation system for recirculating liquid sprayed in the treating chamber to the spraying system, and a light assembly including a first light source and a first light guide provided on the distribution header. The first light source emits light to the first light guide and first light guide distributes light to the treating chamber.

BRIEF DESCRIPTION OF THE DRAWINGS

[0003] In the drawings:

[0004] FIG. **1** is a schematic, cross-sectional view of a dishwasher with a light assembly according to a first embodiment of the invention;

[0005] FIG. **2** is a schematic view of a control system of the dishwasher of FIG. **1**;

[0006] FIG. **3** is a perspective of the dishwasher from FIG. **1**, with internal components removed for clarity to show the light assembly;

[0007] FIG. **4** is an exploded view of the light assembly from FIG. **3**;

[0008] FIG. **5** is a cross-sectional view through line V-V of FIG. **3**;

[0009] FIG. **6** is a perspective of a dishwasher, with internal components removed for clarity to show a light assembly according to a second embodiment of the invention;

[0010] FIG. **7** is an exploded view of the light assembly from FIG. **6**;

[0011] FIG. **8** is a perspective of a dishwasher, with internal components removed for clarity to show a dual light assembly according to a third embodiment of the invention;

[0012] FIG. **9** is a partially exploded view of the dual light assembly from FIG. **8**;

[0013] FIG. **10** is a close-up exploded view of the dual light assembly from FIG. **8**;

[0014] FIG. **11** is a perspective of a dishwasher, with internal components removed for clarity to show a light assembly according to a fourth embodiment of the invention;

[0015] FIG. **12** is a perspective of a dishwasher, with internal components removed for clarity to show a light assembly according to a fifth embodiment of the invention; and

[0016] FIG. **13** is a schematic view illustrating a viewing angle for the light assembly of the first embodiment of the invention.

DESCRIPTION OF EMBODIMENTS OF THE INVENTION

[0017] In FIG. **1**, an automated dishwasher **10** according to one embodiment of the invention is illustrated. The dishwasher **10** can treat dishes according to an automatic cycle of operation. Depending on whether the dishwasher **10** is a stand-alone or built-in, the dishwasher includes a cabinet **12** that may be a chassis/frame with or without panels attached, respectively. The dishwasher **10** shares many features of a conventional automatic dishwasher, which will not be described in detail herein except as necessary for a complete understanding of the invention. While the present invention is described in terms of a conventional dishwashing unit, it could also be implemented in other types of dishwashing units, such as in-sink dishwashers, multi-tub dishwashers, or drawer-type dishwashers.

[0018] A controller **14** may be located within the cabinet **12** and may be operably coupled with various components of the dishwasher **10** to implement one or more cycles of operation. A control panel or user interface **16** may be provided on the dishwasher **10** and coupled with the controller **14**. The user interface **16** may include operational controls such as dials, lights, switches, and displays enabling a user to input commands, such as a cycle of operation, to the controller **14** and receive information.

[0019] A tub **18** is located within the cabinet **12** and at least partially defines a treating chamber **20** with an access opening in the form of an open face. A cover, illustrated as a door **22**, may be hingedly mounted to the cabinet **12** and may move between an opened position, wherein the user may access the treating chamber **20**, and a closed position, as shown in FIG. **1**, wherein the door **22** covers or closes the open face of the treating chamber **20**.

[0020] Dish holders in the form of upper and lower dish racks **24**, **26** are located within the treating chamber **20** and receive dishes for being treated. The racks **24**, **26** are mounted for slidable movement in and out of the treating chamber **20** for ease of loading and unloading. As used in this description, the term "dish(es)" is intended to be generic to any item, single or plural, that may be treated in the dishwasher **10**, including, without limitation; utensils, plates, pots, bowls, pans, glassware, and silverware. While not shown, additional utensil holders, such as a silverware basket on the interior of the door **22**, may also be provided.

[0021] A spraying system **28** may be provided for spraying liquid into the treating chamber **20** and is illustrated in the form of an upper sprayer **30**, a mid-level rotatable sprayer **32**, a lower rotatable sprayer **34**, and a distribution header **36**. The upper sprayer **30** may be located above the upper rack **24** and is illustrated as a fixed spray nozzle that sprays liquid downwardly within the treating chamber **20**. The mid-level rotatable sprayer **32** is located between the upper rack **24** and the lower rack **26** and is illustrated as a rotating spray arm. The mid-level spray arm **32** may provide a liquid spray upwardly through the bottom of the upper rack **24**. The mid-level rotatable sprayer **32** may optionally also provide a liquid spray downwardly onto the lower rack **26**, but for purposes of

simplification, this will not be illustrated herein. The lower rotatable sprayer **34** is located underneath the lower rack **26** and may provide a liquid spray upwardly through the bottom of the lower rack **26**.

[0022] The distribution header **36** may be fixedly mounted to the tub **18** adjacent one of both of the racks **24**, **26**, and as shown herein is provided between the racks **24**, **26**. The distribution header **36** may not be limited to this position; rather, the distribution header **36** may be located in virtually any part of the treating chamber **20**.

[0023] A liquid recirculation system may be provided for recirculating liquid from the treating chamber **20** to the spraying system **28**. The recirculation system may include a sump **38** and a pump assembly **40**. The sump **38** collects the liquid sprayed in the treating chamber **20** and may be formed by a sloped or recessed portion of a bottom wall **42** of the tub **18**. The pump assembly **40** may include both a drain pump **44** and a recirculation pump **46**.

[0024] The drain pump **44** may draw liquid from the sump **38** and pump the liquid out of the dishwasher **10** to a household drain line **48**. The recirculation pump **46** may draw liquid from the sump **38** and pump the liquid to the spraying system **28** to supply liquid into the treating chamber **20**. While the pump assembly **40** is illustrated as having separate drain and recirculation pumps **44**, **46** in an alternative embodiment, the pump assembly **40** may include a single pump configured to selectively supply wash liquid to either the spraying system **28** or the drain line **48**, such as by configuring the pump to rotate in opposite directions, or by providing a suitable valve system. While not shown, a liquid supply system may include a water supply conduit coupled with a household water supply for supplying water to the sump **38**.

[0025] As shown herein, the recirculation pump **46** has an outlet conduit **50** in fluid communication with the spraying system **28** for discharging wash liquid from the recirculation pump **46** to the sprayers **30-36**. As illustrated, liquid may be supplied to the distribution header **36**, mid-level rotatable sprayer **32**, and upper sprayer **30** through a supply tube **52** that extends generally rearward from the recirculation pump **46** and upwardly along a rear wall of the tub **18**. While the supply tube **52** ultimately supplies liquid to the distribution header **36**, mid-level rotatable sprayer **32**, and upper sprayer **30**, it may fluidly communicate with one or more manifold tubes that directly transport liquid to the distribution header **36**, mid-level rotatable sprayer **32**, and upper sprayer **30**. Further, diverters (not shown) may be provided within the spraying system **28** such that liquid may be selectively supplied to each of the sprayers **30-36**. The sprayers **30-36** spray water and/or treating chemistry onto the dish racks **24**, **26** (and hence any dishes positioned thereon) to effect a recirculation of the liquid from the treating chamber **20** to the liquid spraying system **28** to define a recirculation flow path.

[0026] Additional functional systems may be provided for the dishwasher **10**. For example, a heating system having a heater **54** may be located within or near the sump **38** for heating liquid contained in the sump **38**. A dispensing system **56**, which may dispense a detergent during the wash step of the cycle of operation or a rinse aid during the rinse step of the cycle of operation, may be located within the dishwasher **10**, such as on an inner surface of the door. A filtering system (not shown) may be fluidly coupled with the recirculation flow path for filtering the recirculated liquid.

[0027] A light assembly **58** may be provided inside the cabinet **12** for selectively illuminating the treating chamber **20**. The light assembly **58** can be at least partially provided on the distribution header **36** within the tub **18**, and can illuminate one or both of the racks **24**, **26**. As shown herein, the light assembly is provided between the racks **24**, **26** and illuminates both of the racks **24**, **26**.

[0028] As illustrated in FIG. **2**, the controller **14** may be provided with a memory **60** and a central processing unit (CPU) **62**. The memory **60** may be used for storing control software that may be executed by the CPU **62** in completing a cycle of operation using the dishwasher **10** and any additional software. For example, the memory **60** may store one or more pre-programmed cycles of operation that may be selected by a user and completed by the dishwasher **10**. A cycle of operation for the dishwasher **10** may include one or more of the following steps: a wash step, a rinse step, and a drying step. The wash step may further include a pre-wash step and a main wash step. The rinse step may also include multiple steps such as one or more additional rinsing steps performed in addition to a first rinsing. The amounts of water and/or rinse aid used during each of the multiple rinse steps may be varied. The drying step may have a non-heated drying step (so called "air only"), a heated drying step or a combination thereof. These multiple steps may also be performed by the dishwasher **10** in any desired combination.

[0029] The controller **14** may be operably coupled with one or more components of the dishwasher **10** for communicating with and controlling the operation of the components to complete a cycle of operation. For example, the controller **14** may be coupled with the recirculation pump **46** for circulation of liquid in the tub **18** and the drain pump **44** for drainage of liquid in the tub **18**. The controller **14** may also be operably coupled to the heater **54**, the dispensing system **56**, and the light assembly **58**. In one example, the controller **14** can be configured to illuminate the light assembly **58** when the door **22** is opened and to turn the light assembly **58** off when the door **22** is closed. Further, the controller **14** can be coupled with the timer to automatically shut off the light assembly **58** if the door **22** remains open for a predetermined period of time. Alternatively or additionally, an operational control for the lighting assembly **58** can be provided on the user interface **16** to allow the user to manually turn the lighting assembly **58** on and off.

[0030] The controller **14** may also be coupled with one or more optional sensors **64**. Non-limiting examples of optional sensors **64** that may be communicably coupled with the controller **14** include a moisture sensor, a door sensor, a temperature sensor, a detergent and rinse aid presence/type sensor(s). In one example, a door sensor **64** can be provided which provides a signal to the controller **14** when the door is opened or closed in order to control the illumination of the light assembly **58** as described above.

[0031] FIG. **3** is a perspective view of the dishwasher **10** of FIG. **1**, illustrating the light assembly **58** on the distribution header **36** within the tub **18**, with the tub **18** shown in phantom line and internal components such as the dish racks **24**, **26** and sprayers **30**, **32**, **34** removed for clarity. The tub **18** includes opposing left and right side walls **66**, **68** joined by a rear wall **70**, a bottom wall **72**, and a top wall **74** which together defines the treating chamber **20**.

[0032] The distribution header **36** has at least one aperture **76** for spraying liquid into the treating chamber **20**. The at least one aperture **76** can be provided on at least one nozzle **78** supported by the distribution header **36**. The nozzle **78** may be fixed or rotatable with respect to the tub **18**. As illustrated

herein, the distribution header **36** may include multiple fixed nozzles **78**, each having multiple apertures **76** configured to spray wash liquid outwardly from the distribution header **36**.

[0033] The distribution header **36** extends along at least one wall of the tub **18**. As shown herein, the distribution header **36** extends along the rear wall **70** and along at least a portion of the left and right side walls **66**, **68**. The distribution header **36** can have a generally U-shaped body, with a rear portion **80** extending horizontally along the rear wall **70** of the tub **18** and two side portions **82**, **84** extending horizontally along the side walls **66**, **68** of the tub **18**. The side portions **82**, **84** can be substantially flush with the side walls **66**, **68** of the tub **18**, while the rear portion **80** can have a central bowed portion to accommodate for the supply tube **52** (FIG. **1**). As illustrated, two nozzles **78** are provided on the rear portion **80**, and one nozzle **78** is provided on each of the side portions **82**, **84** (the right side nozzle **78** is not visible in FIG. **3**), although other configurations of nozzles **78** are possible.

[0034] The distribution header **36** can further include a manifold **86** for providing liquid to the nozzles **78** provided on the distribution header **36**. The manifold **86** can be in fluid communication with the supply tube **52** (FIG. **1**) for receiving liquid recirculated by the recirculation system, and can define a hollow passage through which liquid may flow to the nozzles **78**. In the illustrated embodiment, the manifold **86** is provided on an outer face of the distribution header **36** and, like the distribution header **36**, can have a generally U-shape body extending horizontally along the rear wall **70** of the tub **18** and along the side walls **66**, **68** of the tub **18**. The inner face of the distribution header **36** opposite the manifold **86** forms a cover **88** for the manifold **86**. The cover **88** can provide food particles and other debris from getting trapped behind the manifold **86**. The manifold **86** and the cover **88** can be integrally formed with each other.

[0035] The light assembly **58** includes at least one light source **90** and at least one light guide **92** which is provided on the distribution header **36**. The light source **90** is configured to emit light to the light guide **92**, which in turn distributes light to the treating chamber **20**. The light guide **92** is a device designed to transport and/or distribute light from the light source **90** to a point within the tub **18** at some distance in order to illuminate the treating chamber **20**. The distance could be minimal, such as if the light source **90** and light guide **92** were provided on one common wall of the tub **18**. Alternatively, the distance could be greater, with the light source **90** provided on one wall of the tub **18** and the light guide **92** provided on or extending to a different wall of the tub **18**. Regardless of the distance, the light guide **92** may be uniformly illuminated along its length by the light source **90**.

[0036] The light guide **92** can be made from polycarbonate, polyester, acrylic, glass, or other optical grade materials suited to withstand the conditions expected inside the dishwasher **10**. Furthermore, the light guide **92** can be flexible or rigid. A flexible light guide **92** may be beneficial in allowing allow light transportation at custom angles, which may be beneficial in the dishwasher application shown in the drawings in which the light guide **92** extends over multiple walls of the tub **18**.

[0037] In one example, the light guide **92** is provided in the form of a light pipe. The light pipe can include an optical fiber or a solid transparent plastic rod for transmitting light lengthwise. While the terms 'pipe' and 'rod' are used herein, it is noted that the light guide **92** is not limited to having an elongated cylindrical shape, but rather can have a variety of shapes and cross sections. The light pipe can have a co-extruded reflector, printing, or etching running the length of the light pipe in order to reflect light out of the light pipe.

[0038] As shown herein the light assembly **58** comprises two light sources **90** and four light guides **92**, two of which are associated with each light source **90**. One light source **90** is associated with the left side wall **66** of the tub **18** and the other light source **90** is associated with the right side wall **68** of the tub **18**. For the left light source **90**, an upper light guide **92** is provided on an upper portion of the distribution header **36** and a lower light guide **92** is provided on a lower portion of the distribution header **36**, and both extend over a portion of the left side wall **66** and the rear wall **70**. Likewise for the right light source **90**, an upper light guide **92** is provided on an upper portion of the distribution header **36** and a lower light guide **92** is provided on a lower portion of the distribution header **36**, and both extend over a portion of the right side wall **68** and the rear wall **70**. The upper and lower light guides **92** can be substantially parallel to each other as they extend along the distribution header **36**, and can further be substantially coextensive which each other. The light guides **92** illuminate the treating chamber **20**, including the dish racks **24**, **26** (FIG. **1**). The light guides **92** can further be configured to extend adjacent to the nozzles **78** to highlight the spraying features of the distribution header **36**.

[0039] The light sources **90** can be provided inside or outside of the tub **18**. In the illustrated embodiment, the light sources **90** are provided outside the tub **18**. More specifically, the light sources **90** are provided outside the left and right side walls **66**, **68**. End caps **94** attached to the side portions **82**, **84** of the distribution header **36** provide at least some mechanical support for the light sources **90**. The end caps **94** are provided on the inside of the tub **18**.

[0040] FIG. **4** is an exploded view of the light assembly **58** from FIG. **3**. The distribution header **36** includes at least one seat **96** for mounting the at least one light guide **92**. As shown, four seats **96** are provided on the cover **88** of the distribution header to support the four light guides **92**, and include L-shaped channels **98** running along the upper and lower edges of the cover **88**. The channels **98** for the left light guides **92** can extend along the rear and left side portions **80**, **82** of the distribution header **36**, while the channels **98** for the right light guides **92** can extend along the rear and right side portions **80**, **84** of the distribution header **36**.

[0041] The light guide seat **96** can be configured to mount the light guide **92** by a friction fit or interference fit. For example, as shown herein the seats **96** are channels **98** having a U-shaped cross-section that are dimensioned with respect to the dimensions of the liquid guide **92** to fasten the light guide **92** to the distribution header **36** by friction when the light guide **92** is pressed into the U-shaped channel **98**. Alternatively, the seat **96** can have a snap fit with the light guide **92**, with the seat **96** having a protruding part such as a hook, stud, or bead (not shown) that deflects during assembly of the light guide **92** to catch and retain the light guide **92** in the channel **98**.

[0042] Each light source **90** can include a housing **100** having two mating halves **102** and an end cap cover **104** which is connected to the end cap **94**. The housing **100** contains at least one light emitter which emits light toward the light guides **92**.

[0043] FIG. **5** is a cross-sectional view through line V-V of FIG. **3**. As shown, the light emitter can include a printed circuit board (PCB) **106** which has at least one light emitting

diode (LED) **108** supported on the PCB **106**. The illustrated PCB **106** carries two LEDs **108**, one for the upper light guide **92** and one for the lower light guide **92**. The PCB **106** can be electrically coupled with the controller **14** for controlling the illumination of the LEDs **108** as described above with reference to FIG. **2**.

[0044] The mating halves **102** of the housing **100** mate together over the PCB **106**, and the housing **100** is mounted to the one of the walls of the tub **18** with the PCB **106** on the exterior of the tub **18**. The housing **100** can be attached to the tub **18** by a clamp **110** carried on a portion of the housing **100** and positioned adjacent to the exterior of the tub **18** and an end cap cover **112** which is fastened to the housing **100** by a fastener **114** and positioned adjacent to the interior of the tub **18**. The fastener **114** extends through the housing **100**, clamp **110**, and tub **18** to fasten with the end cap cover **112**, essentially clamping the light source **90** to the tub wall.

[0045] The end cap cover **112** is coupled with the end cap **94** of the distribution header **36**. A gasket **116** can be positioned between the end cap **94** and the end cap cover **112** on the interior of the tub **18** to prevent liquid from entering the light source **90**. In one example, the end cap cover **112** can have hooked protrusions **118** which snap into a complementary recess **120** on the end cap **94**, although other fastening means are possible.

[0046] The light guides **92** have proximal segments **122** which extend into the end caps **94** in order to be in light receiving relationships with their associated light source **90**. In the illustrated embodiments, each proximal segment **122** is bent in order to extend through the end cap **94** and into the housing **100** of the light source **90**. A terminal end **124** of the proximal segment **122** is adjacent to and in facing relationship with the LED **108** on the PCB **106** in order to receive light emitted by the LED **108**.

[0047] FIG. **6** is a perspective of a dishwasher **10**, with internal components removed for clarity to show a light assembly **58** according to a second embodiment of the invention. The second embodiment can be substantially similar to the first embodiment, but differs in the configuration of the distribution header **36** and the nozzles **78**. Here, the nozzles **78** are rotatable with respect to the distribution header **36**, and are arranged in pairs on the left and right side portions **82**, **84** of the distribution header **36**, with no nozzles **78** provided on the rear portion **80**; however, other arrangements of rotatable nozzles **78** are possible.

[0048] FIG. **7** is an exploded view of the light assembly **58** from FIG. **6**. In the second embodiment the distribution header **36** is provided with a separate manifold **86**, such that the manifold **86** and the cover **88** of the distribution header **36** are separately formed, with the manifold **86** provided on the interior of tub **18**, and the cover **88** mounted over the manifold **65**. The manifold **86** is provided with several ports **126** in fluid communication with the supply tube **52**. The ports **126** can protrude through openings **128** the cover **88** in order to couple with and provide fluid to the nozzles **78**. The nozzles **78** are rotatably mounted to the manifold **86** such that emission of liquid from the apertures **76** causes the nozzles **78** to spin.

[0049] FIG. **8** is a perspective of a dishwasher **10**, with internal components removed for clarity to show a dual light assembly according to a third embodiment of the invention. The third embodiment can be similar to the first embodiment, but differs in provision of at least one the light source **90** for the light assembly **58** on the inside of the tub **18**. Another difference is the provision of an additional light assembly **130** within the treating chamber **20**. Furthermore, the light assemblies **58**, **130** are not provided on a distribution header for spraying wash liquid into the treating chamber **20**, but rather are provided on a lighting mount **132** provided in the tub **18**. Of course, it is understood that the light assemblies **58**, **130** could be provided on any of the distribution headers **36** disclosed herein.

[0050] The lighting mount **132** extends along at least one wall of the tub **18**. As shown herein, the lighting mount **132** extends along the rear wall **70** and along at least a portion of the left and right side walls **66**, **68**. The lighting mount **132** can have a generally U-shaped body, with a rear portion **134** extending horizontally along the rear wall **70** of the tub **18** and two side portions **136**, **138** extending horizontally along the side walls **66**, **68** of the tub **18**. The side portions **136**, **138** can be substantially flush with the side walls **66**, **68** of the tub **18**, while the rear portion **134** can have a central bowed section **140** to accommodate for the supply tube **52** (FIG. **1**), which extends past the lighting mount **132** to supply liquid to the upper sprayer **30** and the mid-level sprayer **32**. The lighting mount **132** further includes end caps **142** attached to the side portions **136**, **138** for supporting the light sources **90** inside the tub **18**. In some respects, the lighting mount **132** can be considered to be similar to the cover **88** of the distribution header **36** but without an associated manifold **86**.

[0051] The lighting mount **132** may be provided anywhere inside the cabinet **12** for supporting the light assembly **58**. Similar to the configuration shown in FIG. **1**, the light assembly **58** of the third embodiment can be provided between the racks **24**, **26** to illuminate both of the racks **24**, **26**. The lighting mount **132** can be coupled with the tub **18** in any suitable manner; as shown herein, multiple brackets **143** can be used to attach the lighting mount **132** to the tub **18**.

[0052] FIG. **9** is a partially exploded view of the dual light assembly from FIG. **8**. The lighting mount **132** includes at least one seat **144** for mounting the at least one light guide **92**. As shown, four seats **144** are provided on the lighting mount **132** to support the four light guides **92**, and include L-shaped channels **146** running along the upper and lower edges of the lighting mount **132**. The channels **146** for the left light guides **92** can extend along the rear and left side portions **134**, **136** of the lighting mount **132**, while the channels **146** for the right light guides **92** can extend along the rear and right side portions **134**, **138** of the lighting mount **132**.

[0053] As described above for the first embodiment, the light guide seat **144** can be configured to mount the light guide **92** by a friction/interference fit or snap fit. For example, as shown herein the seat **144** can have a snap fit with the light guide **92**, with the seat **144** having a protruding part in the form of a hook **148** that deflects during assembly of the light guide **92** to catch and retain the light guide **92** in the channel **146**. Multiple hooks **148** can be provided along the seat **144** to retain the light guide in the channel **146** along its entire length.

[0054] FIG. **10** is a close-up exploded view of the dual light assembly from FIG. **8**. The housing for each light source **90** is formed by the end cap **142**, which has two mating halves **150**, **152**. The end cap **142** contains at least one light emitter which emits light toward the light guides **92**. As shown, the light emitter can include a printed circuit board (PCB) **154** and at least one light emitting diode (LED) **156** supported on the PCB **154**. The illustrated PCB **154** carries two LEDs **156**, one for the upper light guide **92** and one for the lower light guide **92**. The PCB **154** can be electrically coupled with the con-

troller **14** for controlling the illumination of the LEDs **156** as described above with reference to FIG. **2**.

[0055] The mating halves **150**, **152** of the end cap **142** mate together over the PCB **154**, and can be attached to each other by a fastener (not shown) which extends through the mating halves **150**, **152**. The end cap **142** is in turn coupled with the end of the lighting mount **132** on the interior of the tub **18**. In one example, the end cap **142** can have hooks **158** which snap onto a complementary catch **160** (FIG. **9**) on the lighting mount **132**, although other fastening means are possible. A gasket **162** can be positioned between the mating halves **150**, **152** of the end cap **142** on the interior of the tub **18** to prevent liquid from entering the light source **90**.

[0056] The light guides **92** have proximal segments **164** which extend into the end caps **142** in order to be in light receiving relationships with their associated light source **90**. In the illustrated embodiments, each proximal segment **164** is straight since the light source **90** is provided within the tub **18** with the LEDs in axial alignment with portion of the light guides **92** extending along the side walls **66**, **68** of the tub **18**. A terminal end **166** of the proximal segment **164** is adjacent to and in facing relationship with the LED **156** on the PCB **154** in order to receive light emitted by the LED **156**.

[0057] The additional light assembly **130** may supplement the light provided by the light assembly **58** and includes at least one light source which is provided on the lighting mount **132**. The light source is configured to emit light to the treating chamber **20**. The light source can include at least one light emitter **168** which emits light, a housing **170** for the at least one light emitter **168** and a cover **172** which at least partially encloses the housing **170** and covers the at least one light emitter **168**. As shown, the light emitter **168** can include a printed circuit board (PCB) **174** and at least one light emitting diode (LED) **176** supported on the PCB **174**. Wiring **178** for the LED **176** extends from the PCB **174** out through the housing **170** to a coupler **180** for connecting the LED **176** a source of power, such as the controller **14** (FIG. **2**).

[0058] The cover **172** can have a lens **182** aligned with the LED **176**. The lens **182** can be at least partially transparent or translucent for transmitting light emitted by the LED **176**. As illustrated, the cover **172** partially projects through the tub **18** such that the lens **182** is provided on the interior surface of the lighting mount **132**.

[0059] The PCB **174** can be provided on one end of the housing **170** and mounted to the housing **170** by an emitter seat **184** which overlies the edges of the PCB **174** without blocking light emission from the LED **176**. An end cap **186** covers the end of the housing **170** opposite the emitter seat **184**, and includes openings **188** for the passage of the wiring **178** out of the housing **170**. To prevent liquid from entering the housing **170**, seals **190** can be provided in the openings **188** between the wiring **178** and the end cap **186** and a gasket **192** can be provided between the end cap **186** and the housing cover **172**.

[0060] As shown herein, two additional light assemblies **130** are provided, with one light assembly **130** associated with the left side wall **66** of the tub **18** and the other light assembly **130** associated with the right side wall **68** of the tub **18**. The left light assembly **130** can be provided on the left side portion **136** of the lighting mount **132** and the right light assembly **130** can be provided on the right side portion **138** of the lighting mount **132**.

[0061] The lighting mount **132** includes a one seat **194** for mounting the light assembly **130**. As shown, two seats **194** are provided to support the two light assemblies **130**, and include openings **196** formed in the side portions **136**, **138** of the lighting mount **132** (FIG. **9**). The openings **196** can be aligned with corresponding openings (not shown) in the tub **18** for passage of the cover **172** through the tub walls.

[0062] The PCB **174** can be electrically coupled with the controller **14** (FIG. **2**) for controlling the illumination of the LEDs **176**. In one example, the controller **14** can be configured to illuminate the light assembly **130** under the same conditions as the light assembly **58**, as described above. Alternatively, an operational control for the lighting assembly **130** can be provided on the user interface **16** to allow the user to manually turn the lighting assembly **130** on and off independently of the lighting assembly **58**.

[0063] FIG. **11** is a perspective of a dishwasher, with internal components removed for clarity to show a light assembly **58** according to a fourth embodiment of the invention. The fourth embodiment differs from the previous embodiments in that a single light guide **92** is provided for illuminating the treating chamber **20**. The single light guide **92** may be configured to illuminate one or both of the racks **24**, **26** (FIG. **1**) in the dishwasher. The single light guide **92** may further have a light source **90** (not shown) which may be outside or inside of the tub **18** as described above for the previous embodiments.

[0064] The single light guide **92** is shown as being provided on the upper edge of a distribution header **36**, but may be provided on a lighting mount **132** as described for the third embodiment. The distribution header **36** is illustrated as having dual rotating nozzles **78** on each side wall **66**, **68** of the tub **18**, with only the nozzles **78** on the left side wall **66** being visible in FIG. **11**, although other nozzle configurations are possible.

[0065] FIG. **12** is a perspective of a dishwasher, with internal components removed for clarity to show a light assembly **58** according to a fifth embodiment of the invention. The fifth embodiment differs from the previous embodiments in that a single light guide **92** is provided for illuminating the treating chamber **20**, and extends around the lighting mount **132** in a substantially continuous loop. The looped light guide **92** can include an upper segment **198** and a lower segment **200** joint by two end segments **202**, **204**. As shown herein, the upper segment **198** extends along the upper edge of the lighting mount **132** and the lower segment **200** extends along the lower edge of the lighting mount **132**. The lighting mount **132** does not include the end caps **142** to allow the end segments **202**, **204** to extend over the ends of the lighting mount **132**.

[0066] The single light guide **92** may further have a light source **90** which may be outside or inside of the tub **18** as described above for the previous embodiments. The looped light guide **92** is substantially continuous, because the terminal ends (not shown) of the light guide do not meet. A proximal segment of the light guide **92** is configured to be adjacent the light source such that its terminal end is adjacent to and in facing relationship with the light source in order to receive light emitted by the light source. The distal end of the light guide does not meet the proximal end, but may appear to meet or almost to meet the proximal end when the light guide **92** is illuminated

[0067] Alternatively to being provided on a lighting mount **132**, the looped light guide **92** may be provided on a distribution header **36** as described for the first and second embodiments. The single light guide **92** may be configured to illuminate one or both of the racks **24**, **26** (FIG. **1**) in the

dishwasher, and may further emit light out of the treating chamber **20** by the end segments. The fifth embodiment further includes one or more additional light assemblies **206** which emit light into the treating chamber **20**.

[0068] FIG. **13** is a schematic view illustrating a viewing angle for the light assembly **58** of the first embodiment of the invention. While shown with respect to the first embodiment, the viewing angle schematic is applicable to any of the embodiments discussed herein. The light guide **92** can be configured to emit light at a desired viewing angle or range of viewing angles α-β. The viewing angle can be measured from a coordinate system conceptually applied to the light guide at an inner, upper quadrant of the light guide with respect to the tub wall on which the light guide is provided. The light guide **92** can have a range of viewing angles, such that a user looking at the light pipe **92** at an orientation outside the minimum viewing angle α and the maximum viewing angle β will not see the illuminated light pipe. Some non-limiting examples of suitable viewing angles can range between 0 and 50 degrees, or between 15 and 45 degrees, or between 20 and 35 degrees, relative to the horizontal axis of the coordinate system.

[0069] The viewing angle or range of viewing angles can be configured for a user X of average expected height or within a range of average expected heights standing an expected distance within a range of distances from the light assembly **58**. For example, it may be expected that a user will stand in front of the dishwasher **10** with the door **22** open. A typical household dishwasher falls within a conventional set of dimensions; for example the height of the dishwasher may be approximately 34 inches, the height of the lower light guide **92** may be approximately 17 inches, the distance between the rear wall **70** and the open face of the treating chamber **20** may be approximately 24 inches, while the combined length of the bottom wall **72** and open door **22** may be approximately 54 inches.

[0070] The viewing angle can vary based on the configuration of the light guide **92**. For a light guide in the form of a light pipe, the light pipe can be doped to produce varying viewing angles. Features such as a co-extruded reflector, printing, or etching running the length of the light pipe can also affect the viewing angle. A light pipe with a co-extruded reflector may have a maximum viewing angle of 15 degrees, while a light pipe with printing may have a maximum viewing angle of 30 degrees.

[0071] There are several advantages of the present disclosure arising from the various features of the apparatuses described herein. For example, the embodiments of the invention described above allows for illumination of the interior of the tub which is both sufficient to light the racks **24**, **26** and highlight components of the spraying system **28**.

[0072] Another advantage of some of the embodiments of the invention described above is that a single LED can be fired into a light guide to illuminate a large area of the tub **18**. By only requiring one LED to illuminate each light guide, a minimal area is required to be sealed to prevent liquid from reaching the electronics.

[0073] Yet another advantage of some of the embodiments of the invention described above is that the light assembly can be integrated into a manifold of the spraying system which emits a spray of liquid into the treating chamber. This minimizes the number of different components needed for the lighting assembly and the spraying system in that a unique or separate mount for the lighting assembly is not required. Also by placing the lighting assembly on the manifold, the manifold can be aesthetically illuminated to highlight the features of the manifold.

[0074] While the invention has been specifically described in connection with certain specific embodiments thereof, it is to be understood that this is by way of illustration and not of limitation. Reasonable variation and modification are possible within the scope of the forgoing disclosure and drawings without departing from the spirit of the invention which is defined in the appended claims.

What is claimed is:

1. A dishwasher for treating dishes according to an automatic cycle of operation, comprising:

a tub at least partially defining a treating chamber and having an open face providing access to the treating chamber;

a cover selectively closing the open face;

a spraying system comprising a distribution header and at least one aperture provided on the distribution header for spraying wash liquid into the treating chamber;

a recirculation system for recirculating liquid sprayed in the treating chamber to the spraying system; and

a light assembly comprising a first light source and a first light guide provided on the distribution header;

wherein the first light source emits light to the first light guide and first light guide distributes light to the treating chamber.

2. The dishwasher of claim **1**, wherein the light assembly further comprises a second light source and a second light guide provided on the distribution header, wherein the second light source emits light to the second light guide and the second light guide distributes light to the treating chamber.

3. The dishwasher of claim **2**, wherein the first light guide is parallel to the second light guide.

4. The dishwasher of claim **1** and further comprising a lower dish rack located within the treating chamber and an upper dish rack located within the treating chamber above the lower dish rack, wherein the light guide is provided between the lower and upper dish racks.

5. The dishwasher of claim **4**, wherein the light guide is configured to emit light onto both the lower and upper dish racks.

6. The dishwasher of claim **1** and further comprising an end cap attached to an end of the distribution header, wherein the light source is mounted to the end cap.

7. The dishwasher of claim **6**, wherein one end of the light guide extends into the end cap.

8. The dishwasher of claim **6**, wherein the light source comprises a printed circuit board mounted to the end cap, and at least one LED provided on the printed circuit board.

9. The dishwasher of claim **1**, wherein the distribution header comprises a light guide seat, and the light guide is mounted to the light guide seat by a friction or snap fit.

10. The dishwasher of claim **1**, wherein the light guide comprises a light pipe.

11. The dishwasher of claim **10**, wherein the light pipe comprises one of a co-extruded reflector, printing, or etching running the length of the light pipe.

12. The dishwasher of claim **1**, wherein the light source comprises at least one light emitting diode.

13. The dishwasher of claim **1**, wherein the light source is located inside the tub.

14. The dishwasher of claim **1**, wherein the light source is located outside the tub.

15. The dishwasher of claim **1**, wherein the tub comprises at least one side wall connected to a rear wall, and the distribution header extends along at least one of the side wall and the rear wall.

16. The dishwasher of claim **15**, wherein the distribution header extends along both of the side wall and the rear wall.

17. The dishwasher of claim **15**, wherein the distribution header comprises a manifold and at least one nozzle fluidly coupled to the manifold and having the at least one aperture.

18. The dishwasher of claim **17**, wherein the manifold extends along both of the side wall and the rear wall.

19. The dishwasher of claim **18**, wherein the distribution header comprises multiple nozzles fluidly coupled to the manifold, wherein at least one of the multiple nozzles is provided on the rear wall and at least one other of the multiple nozzles is provided on the side wall.

20. The dishwasher of claim **17**, wherein the recirculation system comprises a supply tube extending to the manifold to supply liquid to the at least one nozzle.

21. The dishwasher of claim **17**, wherein the distribution header further comprises a cover extending over the manifold, and the light guide is supported by the cover.

* * * * *