IN THE UNITED STATES PATENT AND TRADEMARK OFFICE

In re Patent of:	Jinfa Zhang, et al.	Attorney Docket No.: 25808-0011IP1
U.S. Patent No.:	8,711,580	
Issue Date:	April 29, 2014	
Appl. Serial No.:	13/112,532	
Filing Date:	May 20, 2011	
Title:	RESONANT CONVERSION SYSTEM WITH OVER-CURRENT PROTECTION PROCESSES	

Mail Stop Patent Board
Patent Trial and Appeal Board
U.S. Patent and Trademark Office
P.O. Box 1450
Alexandria, VA 22313-1450

PETITION FOR *INTER PARTES* REVIEW OF UNITED STATES PATENT NO. 8,711,580 PURSUANT TO 35 U.S.C. §§ 311–319, 37 C.F.R. § 42

TABLE OF CONTENTS

I. INTRODUCTION 1

II. REQUIREMENTS FOR IPR 4
- **A.** Grounds for Standing 4
- **B.** Challenge and Relief Requested 4
- **C.** Claim Construction 6
  - 1. "When the resonant converter generates the over-current" (claims 1, 11, 13, 17, and 18) / "when determining that the resonant converter has generated an over-current" (10) / "determining whether the resonant converter generates over-current" (claim 17) 6
- **D.** Level of Ordinary Skill in the Art 11

III. THE '580 PATENT 11
- **A.** Brief Description 11
- **B.** Prosecution History 14

IV. THE CHALLENGED CLAIMS ARE UNPATENTABLE 15
- **A.** GROUND 1 – All Challenged Claims Would Have Been Obvious over the PRM Datasheet in view of Hwang and, If Necessary, the White Paper and/or the Electronic Design Article 15
  - 1. Overview of The PRM Datasheet and White Paper 15
  - 2. Summary of Hwang 19
  - 3. Motivation to Combine 20
  - 4. Claim 1 25
  - 5. Claim 2 31
  - 6. Claim 3 33
  - 7. Claim 9 36
  - 8. Claim 10. 37
  - 9. Claim 11 38
  - 10. Claim 13 39
  - 11. Claim 17 43
  - 12. Claim 18 45
- **B.** GROUND 2 – All Challenged Claims Would Have Been Obvious over the White Paper in view of Hwang 46
  - 1. Overview of the White Paper 46
  - 2. Summary of the Combination of the White Paper and Hwang 48
  - 3. Motivation to combine the references 50

4. Claim 1 53
5. Claim 2 57
6. Claim 3 57
7. Claim 9 58
8. Claim 10. 58
9. Claim 11 60
10. Claim 13 60
11. Claim 17 62
12. Claim 18 64

V. PTAB DISCRETION SHOULD NOT PRECLUDE INSTITUTION.....64
A. 35 U.S.C. §325(d) – *Advanced Bionics* 64
B. 35 U.S.C. §314(a) – *Fintiv*.....65

VI. CONCLUSION AND FEES 67

VII. MANDATORY NOTICES UNDER 37 C.F.R § 42.8(a)(1).....67
A. Real Party-In-Interest Under 37 C.F.R. § 42.8(b)(1).....67
B. Related Matters Under 37 C.F.R. § 42.8(b)(2) 67
C. Lead And Back-Up Counsel Under 37 C.F.R. § 42.8(b)(3).....68
D. Service Information 68

EXHIBITS

VICOR-1001	U.S. Patent No. 8,711,580 to Jinfa Zhang, et al. ("the '580 Patent")
VICOR-1002	Excerpts from the Prosecution History of the '580 Patent ("the Prosecution History")
VICOR-1003	Declaration of R. Jacob Baker, Ph.D., P.E.
VICOR-1004	First Amended Complaint, *Delta Electronics, Inc. v. Vicor Corporation* 1-23-cv-01246, D. Del., filed January 26, 2024
VICOR-1005	Ex 3 to First Amended Complaint ("Infringement Allegations")
VICOR-1006	P048F048T24AL Datasheet (2006) ("PRM Datasheet" or "Datasheet")
VICOR-1007	United States Patent No. 6,674,272 to Hwang ("Hwang")
VICOR-1008	"FPA White Paper: Factorized Power Architecture and VI Chips, Flexible, High Performance Power Systems Solutions," 2007 ("White Paper")
VICOR-1009	2007 Home page for vicorpower.com
VICOR-1010	2007 Technical Documents page at vicorpower.com
VICOR-1011	2007 Datasheet page at vicorpower.com
VICOR-1012	2007 VI Chip Datasheets page at vicorpower.com
VICOR-1013	2007 VI Chips page at vicorpower.com
VICOR-1014	2007 White papers page at vicorpower.com
VICOR-1015	2008 HTML version of FPA White Paper at vicorpower.com

VICOR-1016	U.S. Patent No. 6,934,166 to Vinciarelli et al. ("Vinciarelli-166")
VICOR-1017	P048F048T24AL Datasheet Version Retrieved in 2024
VICOR-1018	White Paper Version Retrieved in 2024
VICOR-1019	Declaration of Mark Crane
VICOR-1020	"Factorized-Power Module Completes Basic Picture," Electronic Design, Nov 15, 2004 ("Electronic Design article")
VICOR-1021	"Stays Pending IPR In Del. District Courts Are Here To Stay," March 11, 2022 ("Delaware Stay article")

Vicor Corporation ("**Petitioner**" or "**Vicor**") petitions for *Inter Partes* Review ("**IPR**") of claims 1-3, 9-11, 13, and 17-18 ("**the Challenged Claims**") of U.S. Patent No. 8,711,580 ("**the '580 Patent**"). Compelling evidence presented in this Petition demonstrates at least a reasonable likelihood that Vicor will prevail with respect to at least one of the Challenged Claims.

I. INTRODUCTION

Petitioner brings this IPR because Patent Owner has accused a specific arrangement of specific Vicor power conversion products—Vicor's Pre-Regulation Module (PRM™) and Vicor's Voltage Transformation Module (VTM™)—that is fully disclosed in prior art publications. Patent Owner asserts that its patent covers a system where [i] a Vicor PRM™ regulator provides its output voltage to a Vicor VTM converter, and [ii] Vicor's PRM regulator implements current limiting using an old and well-known technique (by reducing its switching duty cycle). There is nothing inventive in the Challenged Claims, particularly since Vicor disclosed the PRM-VTM system **years before** Patent Owner's earliest possible invention date.

Patent Owner filed a Complaint against Vicor on November 1, 2023, and then filed an Amended Complaint on January 26, 2024. VICOR-1004 (First Amended Complaint); VICOR-1005 (Ex. 3 to First Amended Complaint). Petitioner will refer to the Amended Complaint as that is now the operative pleading.

In the Amended Complaint, Patent Owner asserts that claim 1 of the '580 Patent is infringed when a circuit contains a Vicor PRM and Vicor VTM, and the Vicor PRM provides its output voltage to the Vicor VTM as an input voltage, as shown in the following image from Patent Owner's infringement allegations:

<u>Accused Configuration:</u>

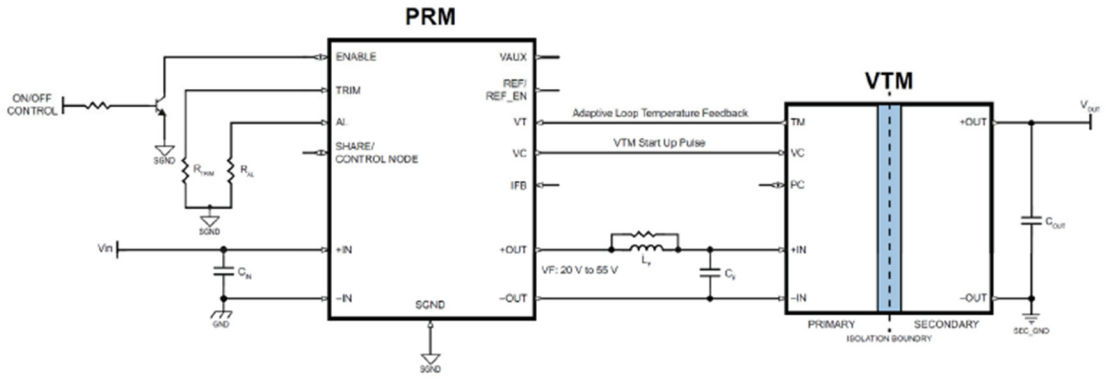

(PRM48Ay480x400A00 Datasheet at 1-2.)

VICOR-1005, Infringement Allegations, p. 5.

However, Patent Owner did not conceive of this configuration. On the contrary, Petitioner had released its PRM regulators and VTM resonant converters well before the critical date and taught the industry through printed publications that a PRM provides its output voltage to the input of a VTM in the same (for all issues relevant here) configuration accused:

Prior Art Disclosure:

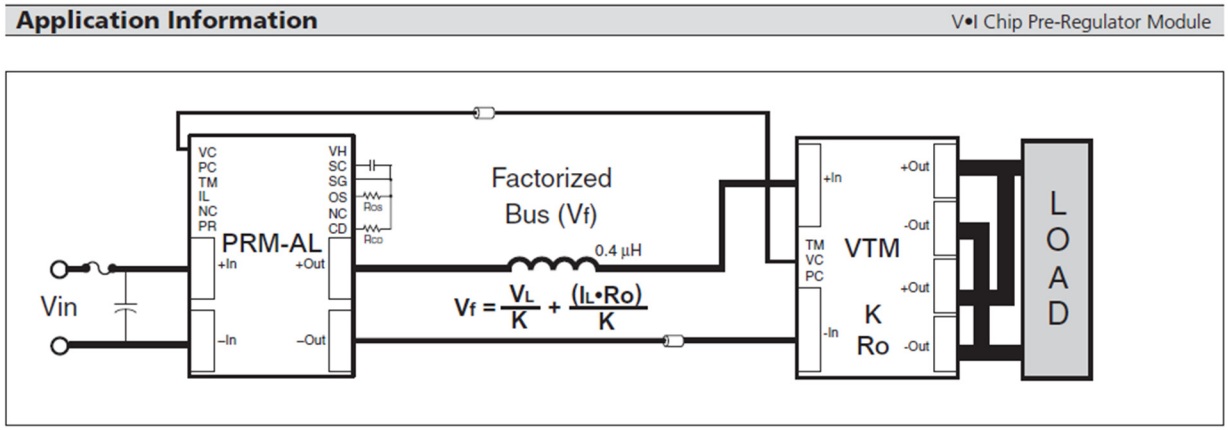

Figure 16 — Adaptive Loop compensation with soft start using the SC port.

VICOR-1006, p. 9. As can be seen, the prior-art datasheet associated with the PRM module shows a PRM (labeled "PRM-AL") on the left side with its output voltage terminals (+Out and -Out) connected to the input voltage terminals (+In and -In) of a VTM module (on the right side).

The only aspect of the accused PRM-VTM configuration not disclosed by Vicor's publications is a well-known implementation of a current limiter circuit. Patent Owner relies on the current limit function of the PRM, and alleges based on information and belief that the current limit is performed by modifying the duty cycle of the PRM. The relevant Vicor publications do not describe in detail how the PRM's current limit function is implemented. However, current limiters were well-known in the art, and reducing duty cycle to provide current limiting in a switching regulator such as the PRM was well-known and old. VICOR-1003, ¶57.

II. REQUIREMENTS FOR IPR

A. Grounds for Standing

Petitioner certifies that the '580 Patent is available for IPR. This Petition is being filed within one year of service of a complaint against Vicor. Vicor is not barred or estopped from requesting review of the Challenged Claims on the below-identified grounds.

B. Challenge and Relief Requested

Vicor requests an IPR of the Challenged Claims on the grounds noted below. Dr. Jacob Baker provides supporting testimony in his Declaration. VICOR-1003.

Ground	Claim(s)	Statutory Basis
1	1-3, 9-11, 13, 17-18	§103: Obvious over PRM Datasheet (Exhibit 1006) in view of Hwang (Exhibit 1007) and if necessary, the White Paper (Exhibit 1008) and/or the Electronic Design article (Exhibit 1020)
2	1-3, 9-11, 13, 17-18	§103: Obvious over the White Paper in view of Hwang

The '580 Patent has a filing date of May 20, 2011, and claims priority to a foreign application filed on May 28, 2010. Accordingly, and without conceding that the May 28, 2010 priority date is correct, the Petition relies on May 28, 2010, as the "Critical Date."

Reference	Filing Date	Publication Date	Statutory Basis
PRM Datasheet	n/a	At least as early as 2006	102(b)
White Paper	n/a	At least as early as 2007	102(b)
Hwang	6/21/2002	1/6/2004	102(b)
Electronic Design Article	n/a	11/15/2004	102(b)

The PRM Datasheet and the White Paper are prior art because they were published on Vicor's website more than one year before the Critical Date and were readily accessible to the public interested in the art, and in particular those designing power converter systems. Vicor provides the Declaration of Mark Crane in support. Exhibit 1019.

As explained in the Crane Declaration, the PRM Datasheet and White Paper were each made available to the public on Vicor's public website many years before the Critical Date and have remained on Vicor's website to this very day. VICOR-1019, ¶¶ 1-30. Vicorpower.com was Vicor's primary corporate website at the time and was the online location from which the interested public could obtain datasheets, white papers, and other product literature about Vicor products. VICOR-1019, ¶ 8; *see also* VICOR-1009 through VICOR-1015.

Prior art copies of the publications are available on the Internet Archives.

The prior art copy of the PRM Datasheet may be found at https://web.archive.org/web/20061018220452/http://www.vicorpower.com/documents/datasheets/48V_48V_240W_PRM.pdf. A prior art copy of the White Paper may be found at https://web.archive.org/web/20070410185135/http://www.vicorpower.com/fpa101/fpa101.pdf.

The current versions of the publications demonstrate that the relevant portions of the publications have not changed since their first publication. For example, the current version of the PRM Datasheet has been updated to reflect it is at its "end of life" and some numerical values were updated, but the core technical disclosure has not changed. VICOR-1017, found at https://www.vicorpower.com/documents/datasheets/48V_48V_240W_PRM.pdf.

The current version of the White Paper has formatting changes, but is virtually indistinguishable from the original version. VICOR-1018 found at https://www.vicorpower.com/documents/whitepapers/fpa101.pdf.

C. Claim Construction

1. "When the resonant converter generates the over-current" (claims 1, 11, 13, 17, and 18) / "when determining that the resonant converter has generated an over-current" (10) / "determining whether the resonant converter generates over-current" (claim 17)

The patent claims require that certain things occur when a "resonant

converter generates" an "over-current" (or "has generated" an "over-current"). Patent Owner's Infringement Allegations demonstrate how Patent Owner contends these terms should be construed.

By way of background, the patent claims recite a resonant conversion system in which a "buck converter" provides an input voltage to a "resonant converter" (claims 1 and 10) or a method in which a "buck converter" may be controlled to "decrease [an / the] input voltage of the resonant converter" (claims 13 and 17). The claims are exemplified in Figure 7.

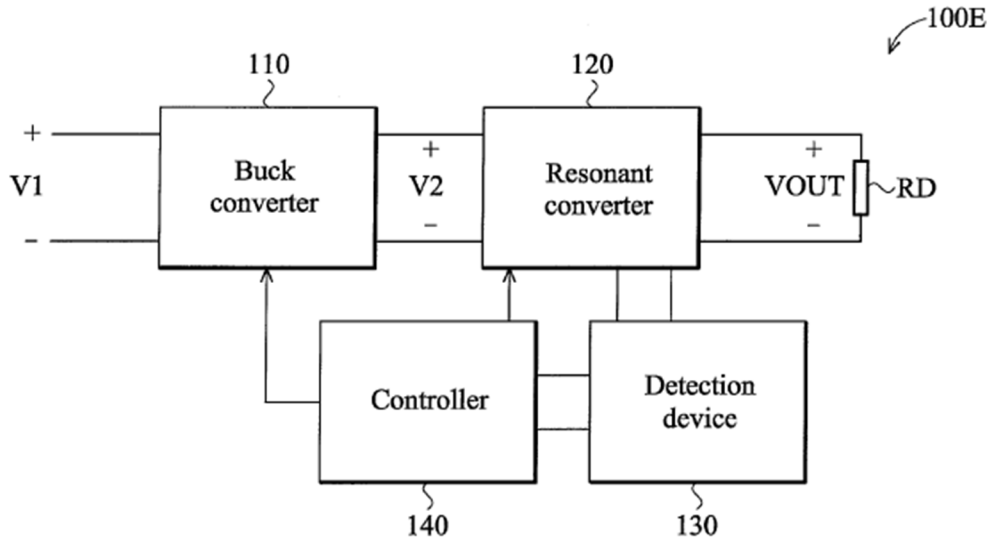

FIG. 7

VICOR-1001, FIG. 7; VICOR-1003, ¶48.

The claims all require that the buck converter respond to an "over-current" condition in the resonant converter by decreasing the input voltage of the resonant converter. In claims 1 and 13, the buck converter must "decrease [the / an] input

voltage received by the resonant converter" "when the resonant converter generates the over-current." In claim 10, a first controller must control the buck converter to "decrease the input voltage received by the resonant converter" "when determining that the resonant converter has generated an over-current." In claim 17, the buck converter must be controlled to "decrease the input voltage" received by "the resonant converter" "when the resonant converter generates the over-current" (collectively, the "over-current" limitations).

In the co-pending litigation, Patent Owner has asserted that the combination of Vicor's PRM regulator (a "buck/boost" regulator) and Vicor's VTM converter (a "resonant" converter) infringes at least claims 1, 3, and 10 of the '263 Patent. VICOR-1004 (Amended Complaint), VICOR-1005 (Ex. 3 to the Amended Complaint, Patent Owner's Infringement Allegations for the '580 Patent). Patent Owner relies on the following configuration of Vicor's PRM and VTM devices (showing that the input voltage of the VTM (+IN, -IN) is connected to the output voltage of the PRM (+OUT, -OUT)):

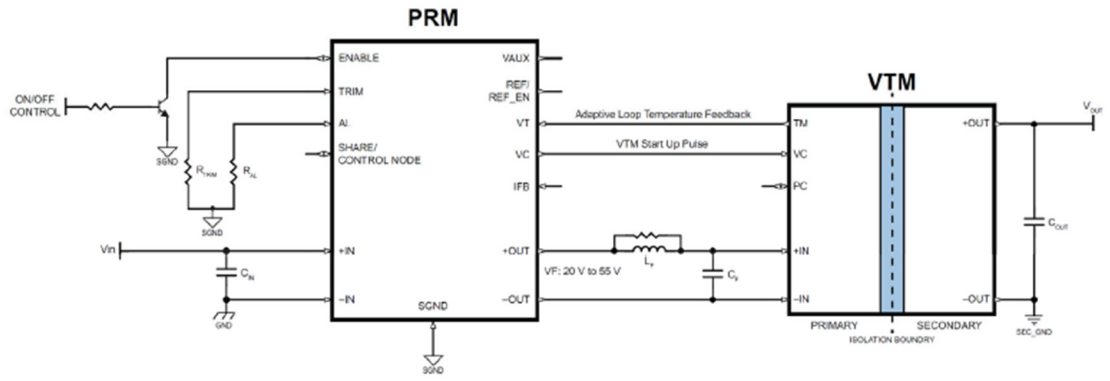

(PRM48Ay480x400A00 Datasheet at 1-2.)

VICOR-1005, Infringement Allegations, p. 5.

The "over-current" limitations require that the buck converter adjust its duty cycle when the **resonant converter** generates an over-current. In its Infringement Allegations, Patent Owner contends that "over-current" limitations are met when **a Vicor PRM** imposes current limiting in a circuit connecting the output voltage of a PRM to the input voltage of a VTM. VICOR-1005, p. 6. Patent Owner reaches this conclusion by noting that (a) the "VTM's output is proportionally related to its input" and (b) the VTM's input "comes from the PRM." VICOR-1005, p. 6. Patent Owner concludes that given the configuration (of PRM output voltage providing the input voltage of the VTM) that an "over-current in the PRM—**thusly—equates** to an overcurrent in the VTM, and control of the PRM overcurrent also controls the VTM overcurrent."[1] VICOR-1005, p. 6-7. Patent Owner further asserts that the phrase a "VTM over-current is reached" is

[1] Emphasis added throughout unless otherwise stated.

met when "**a current limit is reached**" **in the PRM**. VICOR-1005, p. 6-7; VICOR-1003, ¶¶49-54.

Accordingly, under Patent Owner's Apparent Construction, the following claim limitations are met when the output voltage of a PRM (or other buck converter) provides the input voltage to a VTM (or other resonant converter that provides an output current proportional to the input current), and the PRM (or other buck converter) detects that its output current has reached a set current limit:

- "[when]/[that] the resonant converter generates [the] / [an] over-current" (claims 1, 10, 11, 13, and 17);
- "the first controller determines that the resonant converter generates the over-current" (claim 1, claim 10);
- "when determining that the resonant converter has generated an over-current" (claim 10);
- "determining whether the resonant converter generates an over-current" (claim 13);
- "it is determined that the resonant converter generates the over-current" (claim 13);
- "determining whether the resonant converter generates over-current" (claim 17).

D. Level of Ordinary Skill in the Art

A person of ordinary skill in the art ("a skilled artisan") relating to the subject matter of the '580 Patent as of May 28, 2010 would have had (1) at least a bachelor's degree in electrical engineering or a related field, and (2) at least two years of industry experience in the field of power engineering. VICOR-1003, ¶¶41-42. Additional graduate education could substitute for professional experience, and *vice versa*. *Id*.

III. THE '580 PATENT

A. Brief Description

The '580 Patent is directed to a "power resonant conversion system with over-current protection." VICOR-1001, 1:12-16. The patent explains that "over-current protection (OCP) of resonant converters is an important issue." VICOR-1001, 1:25-26. If the resonant converter enters an "over-loaded state or short-circuit state, the resonant current of [the] resonant converters becomes extremely large." VICOR-1001, 1:26-28. The patent states that "conventional method[s]" to provide over-current protection to resonant converters have been unsatisfactory. VICOR-1001, 1:49-2:14.

The purported solution disclosed in the '580 Patent is to provide a buck converter that supplies an input voltage to the resonant converter and to control the buck converter to decrease the input voltage received by the resonant converter when the resonant converter has generated an over-current. VICOR-1001, 2:18-

49. In other words, the purported solution is to add an additional converter in front of the resonant converter, and use that additional converter to provide the over-current protection for the resonant converter.

In one example, the patent describes a buck converter that operates in a "soft-start manner" to perform the over-current protection process. VICOR-1001, 4:10-23. In another example, the system can provide over-current protection by detecting a "signal corresponding to the output current of the resonant converter" that allows the controller to determine "when the resonant converter 120 generates an over-current." VICOR-1001, 4:38-51. The patent further states that "the signal used to reflect the output current of the resonant converter 120 can be the output current of the resonant converter 120 itself." VICOR-1001, 5:4-5; VICOR-1003, ¶¶56-64.

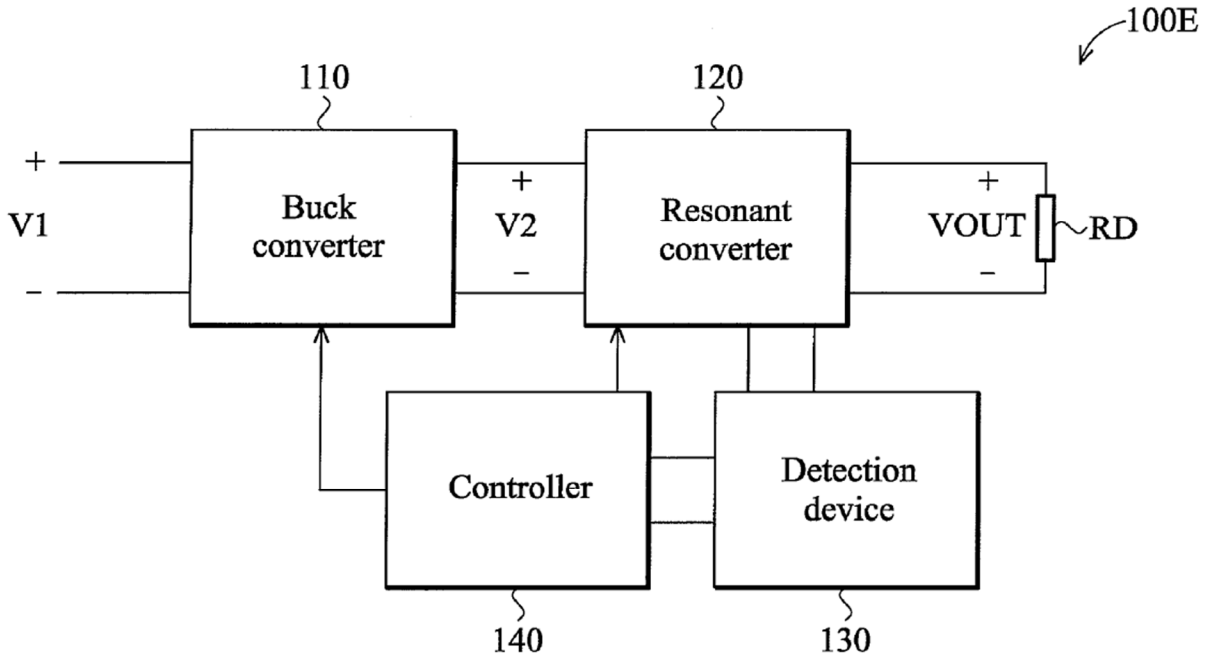

FIG. 7

However, Patent Owner has asserted in the co-pending litigation that this patent covers a power converter configuration where the buck converter imposes a current limit based on its own current limit threshold and provides its output voltage to a VTM resonant converter, as depicted here:

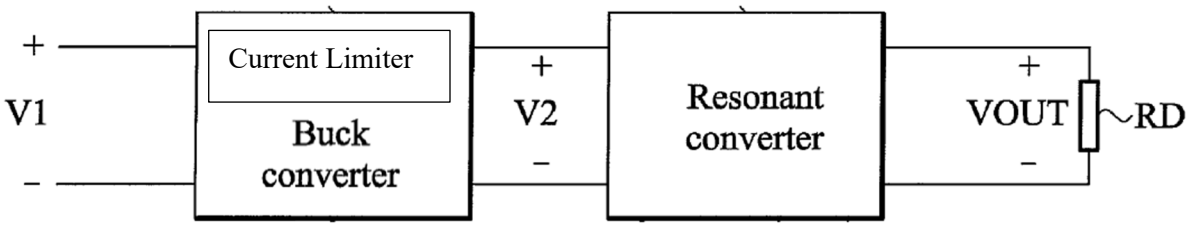

Modified version of VICOR-1001, FIG. 7 to show infringement allegations.

Patent Owner's contention in the litigation is based on its theory that the current at the output of the resonant converter is proportional to the current at the

output of the buck converter and therefore control of over-current at the buck converter provides control of over-current at the resonant converter. VICOR-1005, p. 6-7.

B. Prosecution History

During prosecution of the application leading to the ’580 Patent, the Examiner rejected all pending claims as anticipated by prior art disclosing a “buck converter that feed[s] its output to resonant converter with both converters having overcurrent or overload protection.” VICOR-1002, p. 38, 58. The Applicant objected that the rejection was “uninformative” and failed to address each limitation of the claims. VICOR-1002, p. 48-52. The Applicant further argued that the prior art reference did not control the current of the buck converter or reduce the voltage to the resonant converter as claimed, but instead “shutdown the PWM signals in case of a fault.” VICOR-1002, p. 26-30.

The Examiner issued another rejection, asserting a buck converter reduces its output voltage “by its nature.” VICOR-1002, p. 39. The applicant then amended the claims to require various additional features such as that (1) the buck converter must reduce its duty cycle to effect the over-current protection and (2) the output current is restricted in one of two predetermined currents. VICOR-1002, 21-26.

The Examiner then issued a Notice of Allowance. VICOR-1002, p. 7-11.

IV. THE CHALLENGED CLAIMS ARE UNPATENTABLE

A. GROUND 1 – All Challenged Claims Would Have Been Obvious over the PRM Datasheet in view of Hwang and, If Necessary, the White Paper and/or the Electronic Design Article

1. Overview of The PRM Datasheet and White Paper

Vicor released its PRM and VTM products—and disclosed in printed publications using the configuration where the regulated output voltage of a PRM is used as the input voltage to a VTM—years before the Critical Date.

A datasheet describing Vicor's PRM (the "PRM Datasheet") discloses the same configuration in all material respects of a PRM combined with a VTM that Patent Owner asserts infringes the '580 Patent.

<u>Datasheet</u>:

Application Information V•I Chip Pre-Regulator Module

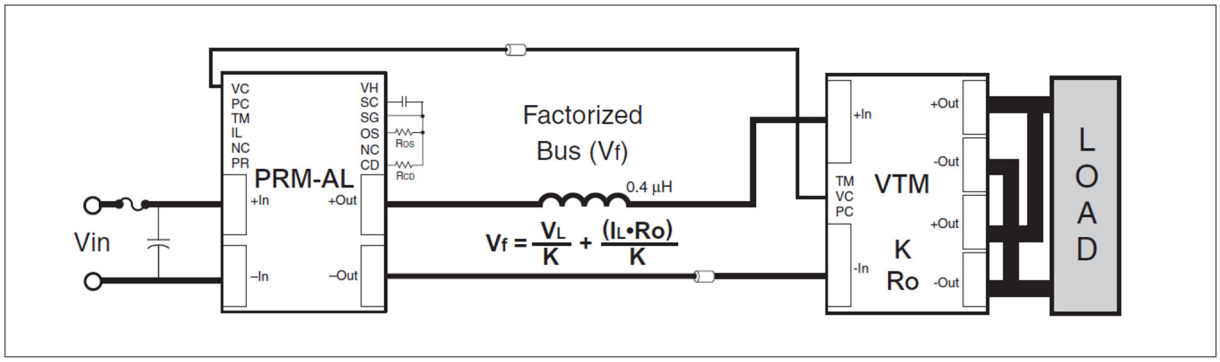

Figure 16 — Adaptive Loop compensation with soft start using the SC port.

VICOR-1006, p. 9; VICOR-1003, ¶69.

Infringement Allegation:

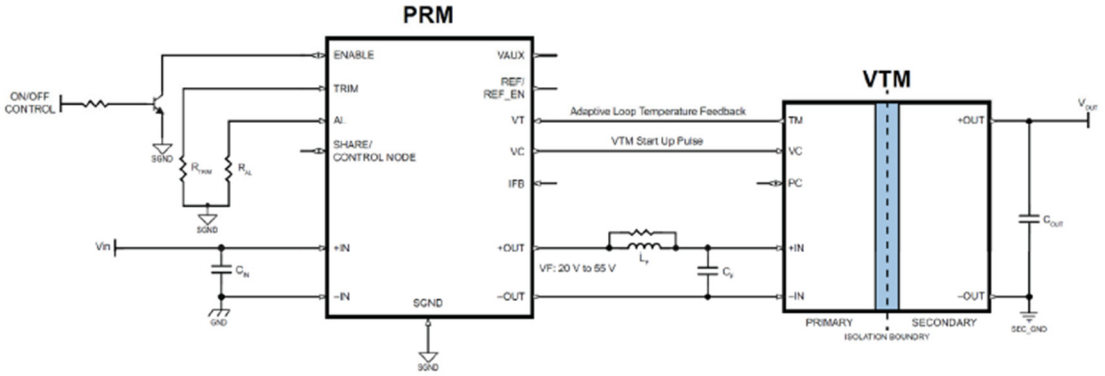

(PRM48Ay480x400A00 Datasheet at 1-2.)

VICOR-1005, p. 5. As can be seen, in both figures, the output voltage of the PRM is fed to the input voltage terminals of the VTM. In addition to the figure above, the PRM Datasheet states that the PRM "is specifically designed to provide a . . . voltage for powering downstream V•I Chip Voltage Transformation Modules (VTMs)." VICOR-1006, p. 1; VICOR-1003, ¶69

The PRM Datasheet describes the PRM as a "buck-boost regulator" having a "1.45 MHz" switching frequency. VICOR-1006, p. 1. From this description, a skilled artisan would understand that the PRM is a switching power converter that provides a regulated output voltage. The term "buck-boost" regulator would inform a skilled artisan that the converter could be controlled to produce a regulated output voltage that is less than ("buck") or greater than ("boost") the input voltage. The PRM Datasheet also discloses that the PRM operates to impose a current limit: "The PRM has a preset, maximum, current limit set point" and has

a port that "may be used to reduce the current limit set point to a lower value." VICOR-1006, p. 8. It was well known in the art that a current limit for a power conversion circuit was an important protection feature that would prevent catastrophic failure of the circuit in the event of a short circuit or at start-up, due to in-rush current into a capacitive load. VICOR-1003, ¶70.

The PRM Datasheet also describes VTMs as modules that "perform true voltage division and current multiplication" but do not otherwise describe their implementation. VICOR-1006, p. 1. However, those of skill in the art would have known that the term "VTM" is Vicor's brand name for its family of isolated DC voltage transformers utilizing Vicor's proprietary Sine Amplitude Converter (SAC) circuit topology. For example, the White Paper, published on Vicor's website, states that the "VTM" is a "high efficiency voltage transformation unit" that comprises a "Sine Amplitude Converter" having a "control architecture [that] locks the operating frequency to the power train resonant frequency." VICOR-1008, p. 2. Resonant operation of the VTM is provided by "the internal ASIC controller" which controls "the switches to maintain operation at resonance." *Id.*, p. 3; VICOR-1003, ¶71.

The White Paper describes advantages of utilizing a SAC circuit topology, including "high spectral purity" and "essentially noise-free operation," *id.*, p. 2, as well as "very low, non-inductive output impedance," providing "an almost

instantaneous response to" load current changes. *Id.,* p. 3. Similarly, an Electronic Design article from 2004, entitled "Factorized-Power Module Completes Basic Picture" with an insert entitled "Inside the VTM," likewise explained to the relevant audience that the Vicor VTM is a resonant converter. VICOR-1020. The article likewise states that the "VTM control architecture locks the operating frequency to the power-train resonant frequency" and "maintain[s] operation at resonance." VICOR-1020, p. 2; VICOR-1003, ¶72. The interested public would seek out white papers to describe products and their applications. VICOR-1003, ¶72.

Like the White Paper, the Electronic Design article explains advantages of using the SAC implementation: "very little noise" and an "almost instantaneous response" to a change in load current. *Id.* Electronic Design was one of the leading trade magazines for electronics designers in the 2004 time frame, and a publication that a skilled artisan would have read. The content of the article is consistent with the date on the trade magazine, as it presents the PRM and VTM as new products. They were not new as of the Critical Date. The copy of the article provided as Exhibit 1020 was provided to Vicor by a clipping service that obtained the publication and forwarded relevant articles to Vicor close to the time of publication. Ex. 2019, ¶29; VICOR-1003, ¶73.

2. Summary of Hwang

Hwang (U.S. Patent No. 6,674,272) is entitled "Current Limiting Technique for a Switching Power Converter." VICOR-1007, Title. Hwang is addressed to a current limiting technique for using in a switching power converter in which "the output voltage Vo is regulated in a closed feedback loop." VICOR-1007, 3:38-50. Hwang teaches that its current limiting technique is applicable to a "power converter [that] has [**a] buck converter** topology" and is also applicable to a "boost converter." VICOR-1007, 3:51-57. Hwang's teachings would thus be applicable to building a non-isolating buck-boost switching converter with a current limit, such as the PRM. Hwang teaches that "[i]n the event an excessive output current is detected," the circuit "is controlled to reduce the switching duty cycle." VICOR-1007, Abstract; VICOR-1003, ¶74..

In a buck or boost converter the output voltage is conventionally regulated by controlling the switching duty cycle. Increasing the duty cycle increases the output voltage and decreasing the duty cycle decreases the output voltage. As taught by Hwang, the current limiter likewise controls the duty cycle. Current limiting is implemented by reducing the duty cycle to decrease the output voltage and thereby reduce the output current the load will draw. Thus, "by reducing the switching duty cycle, the output current is reduced." VICOR-1007, 1:51-56, 2:44-54; VICOR-1003, ¶¶74-81.

For example, "[w]hen a fault occurs that results in an excessive current in the PWM stage, the comparator 122 may initiate the discharging phases of the capacitor C2, thereby reducing the switching duty cycle and, thus, the current." VICOR-1007, 5:56-6:9 VICOR-1003, ¶81.

3. Motivation to Combine

A skilled artisan reading the PRM Datasheet would have been motivated to make a DC-DC converter system as described in the circuit diagram from the PRM Datasheet to obtain the advantages taught in the Datasheet. When building the system, a skilled artisan would have been motivated to investigate the structure of the VTM disclosed in the Datasheet and would have turned to either the White Paper or the Electronic Design article, each of which describe the VTM as an unregulated resonant voltage transformer utilizing a Sine Amplitude Converter (SAC) and thus would have found it obvious to use a VTM that is a resonant converter. Thus, a skilled artisan would have been motivated to combine the PRM Datasheet with the White Paper, or if necessary, the Electronic Design article. VICOR-1003, ¶82.

A skilled artisan would have had a reason to use the resonant SAC technology when implementing the VTM of the circuit in the Datasheet to gain the benefits of SAC technology similarly described in both the White Paper and

Electronic Design article. A skilled artisan would also have been motivated to use the resonant SAC technology because the PRM Datasheet directs the skilled artisan to use the Vicor VTM, which the skilled artisan would learn from the Datasheet and White Paper employs the resonant SAC technology. VICOR-1003, ¶83. Moreover, resonant converters are admitted prior art, as they are disclosed as conventional in the '580 Patent. VICOR-1001, 1:23-26 ("there are more and more applications using resonant converters in recent years" and "in practical applications, over-current protection (OCP) of resonant converters is an important issue").

A skilled artisan would have had a reasonable expectation of success in using a VTM as described in the White Paper or the Electronic Design article because the skilled artisan could either have purchased a VTM from Vicor or built a VTM based on Vicor's patent disclosures, such as, for example, Vinciarelli-166. VICOR-1021, 17:10-54:31; VICOR-1003, ¶84.

The Datasheet discloses that the PRM is a "buck-boost regulator," but does not disclose how to perform the current limit function. A skilled artisan would have been motivated to investigate ways to implement a current limit in a buck and boost converter, and would have turned to a reference such as Hwang for such information. VICOR-1003, ¶85.

Hwang discloses a current limiting technique for a switching regulating

power converter, which may be a buck or boost converter, in which, if "excessive output current is detected," the circuit is "controlled to reduce the switching duty cycle." VICOR-1007, Abstract, 3:51-57. VICOR-1003, ¶86.

Hwang discloses an exemplary buck converter in FIG. 1.

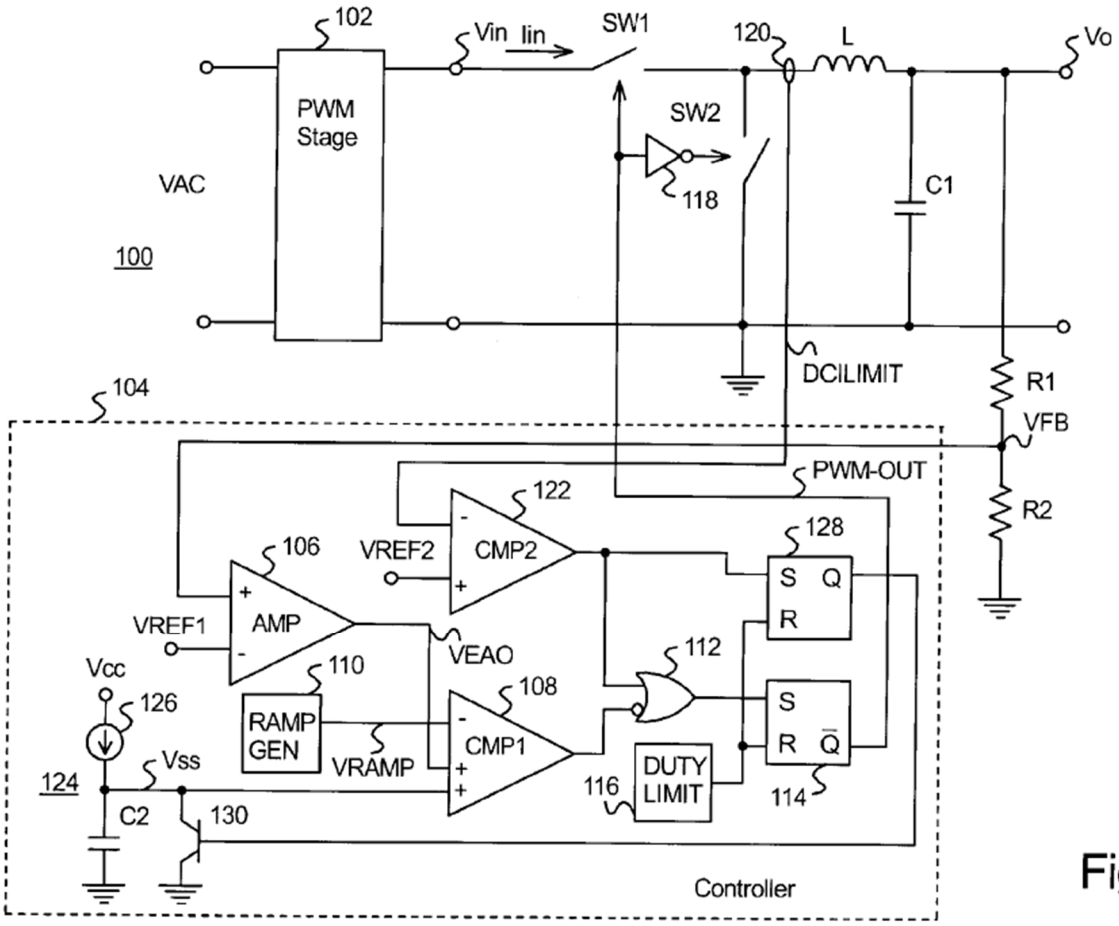

Fig. 1

Hwang takes an AC input and rectifies it to provide a DC input voltage Vin. Thus Hwang discloses a DC to DC converter from Vin to Vout. VICOR-1007, 2:23-29, FIG 1 (showing DC current), FIG. 3a (confirming rectifier at input); VICOR-1003, ¶77. The output voltage Vo is controlled by controlling the duty cycle of switch

SW1. During normal operation, Hwang maintains a desired output voltage. If the output voltage rises above the desired level, then "the switching duty-cycle is reduced which tends to reduce the output voltage." VICOR-1007, 3:38-50. "Conversely, when the output voltage Vo falls" then "the switching duty-cycle is increased which tends to increase the output voltage Vo." *Id.*, 3:38-50. "Accordingly, the output voltage Vo is regulated in a closed feedback loop." *Id.*, 3:49-50; VICOR-1003, ¶87.

However, a "duty cycle limiter is triggered when the output current of the converter exceeds a predetermined level." VICOR-1007, 1:37-39. "The duty cycle is limited to an amount that is related to a degree to which the output current is excessive." *Id.*, 1:39-41. Hwang explains that its circuit "has an advantage in that by reducing the switching duty cycle, the output current is reduced and is, thus, less likely to reach an excessive level upon each cycle of the switch." VICOR-1007, 1:52-56. Thus, Hwang teaches that a current limiter may be implemented by reducing the duty cycle of the switching regulator, which will reduce both the output voltage and the output current. VICOR-1003, ¶88.

A skilled artisan would turn to Hwang for various reasons. VICOR-1003, ¶¶89-94.

First, the PRM Datasheet states the PRM is a "buck-boost regulator" and Hwang specifically teaches a current limit approach for an exemplary "buck"

topology. VICOR-1007, 3:51-57. Hwang further states that the approach is also suitable for a "boost converter." VICOR-1007, 3:51-57; VICOR-1003, ¶90.

Second, the PRM Datasheet describes a current limit feature, but does not describe how the current limit is implemented. Therefore, a skilled artisan would have turned to Hwang for exemplary details for implementing a current limit in such a buck-boost regulator, such as the PRM. For example, Hwang is entitled "Current Limiting Technique for a Switching Power Converter." VICOR-1007, Title. The PRM is a switching power converter, and is both a buck converter and a boost converter. VICOR-1006, p. 1; VICOR-1003, ¶91.

Third, the PRM Datasheet states that it offers a "soft start." VICOR-1006, 9. The implementation details are not provided in the Datasheet. A skilled artisan would therefore turn to Hwang for approaches to implement a soft start circuit. The skilled artisan would note that the PRM Datasheet refers to an "external capacitor" that can control the "output voltage slew rate for soft start" (*Id.*) and would recognize that Hwang likewise uses a "capacitor C2" to control the slew rate of the output voltage for soft start. VICOR-1007, 4:25-42; VICOR-1003, ¶92.

Fourth, a skilled artisan would recognize that combining the PRM Datasheet and Hwang combines prior art elements according to known methods (providing current limiting by reducing duty cycle of a buck converter) to yield predictable results (providing a current limit and soft start) and would provide a

simple incorporation of a known approach to providing a stated feature of the PRM, which lacks the requisite details. In addition, Hwang provides a known technique (duty cycle reduction in a buck or boost converter) to provide current limiting and soft start for a similar device (the PRM which is a buck and boost converter). VICOR-1003, ¶93.

The typical buck and boost regulator at the time of Hwang would maintain a regulated voltage by controlling the switching duty cycle of the regulator (as explained in Hwang). It was thus well within the level of ordinary skill to further modify the switching duty cycle to impose a current limit. Thus, a skilled artisan would have had a reasonable expectation of success in combining the teachings of the PRM in the PRM Datasheet with a current limiter as taught by Hwang in which the duty cycle of the switching regulator is reduced if excessive current is detected. VICOR-1003, ¶94; *see KSR Int'l Co. v. Teleflex Inc*., 550 U.S. 398, 421 (2007).

4. Claim 1

[1pre] A resonant conversion system, comprising

The PRM Datasheet in combination with the White Paper or the Electronic Design article discloses a resonant conversion system (the VTM contains a resonant converter that "maintains operation at resonance" as part of the PRM-VTM power conversion system). VICOR-1020, p.2; VICOR-1006, p. 1; VICOR-1003, ¶95.

[1a] a resonant converter, receiving an input voltage to generate an output voltage;

The PRM Datasheet discloses a Vicor VTM (a resonant converter) receiving an input voltage (annotated as "V2") to generate an output voltage (annotated as "VOUT").

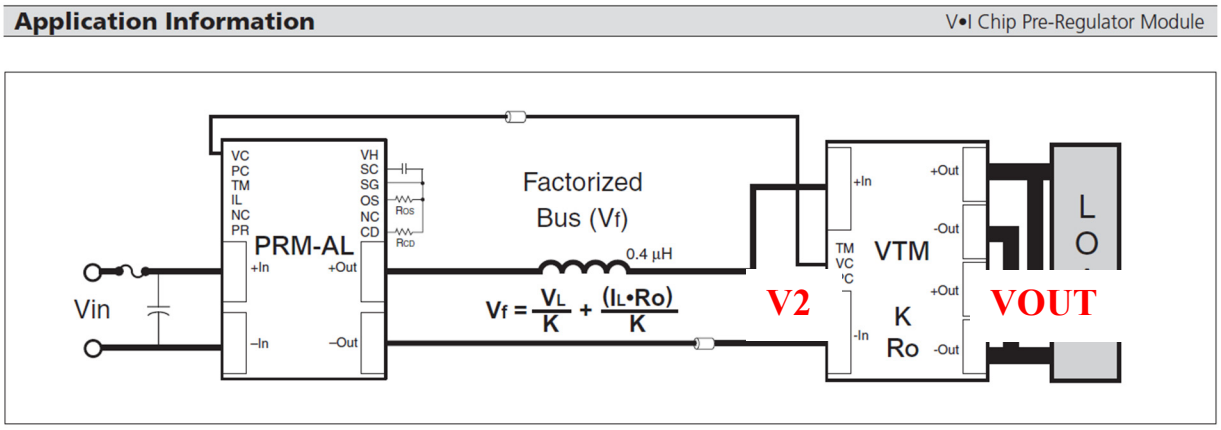

Figure 16 — Adaptive Loop compensation with soft start using the SC port.

VICOR-1006, p. 9. Based on general knowledge in the field, a skilled artisan would have understood that a VTM comprises an SAC, which is a resonant converter. Alternatively, if necessary, a skilled artisan would have implemented the VTM as a SAC based on a combination of the PRM Datasheet and the teachings of either the White Paper or the Electronic Design article. VICOR-1003, ¶96.

The skilled artisan would have understood to implement a VTM comprising a SAC (and thus a resonant converter) based on the teaching of the White Paper and/or the Electronic Design article, both of which disclose that a Vicor VTM is a based on a resonant SAC topology, and describe its advantages. VICOR-1008, p.

2-4; VICOR-1020, p. 2. Moreover, resonant converters were common, as admitted by the '580 Patent, and thus a skilled artisan would know how to implement one. VICOR-1001, 1:18-2:14. VICOR-1003, ¶97.

[1b] a buck converter, providing the input voltage and controlling the input voltage for performing an over-current protection process; and

The PRM Datasheet discloses that the PRM is a buck converter ("ZVS buck-boost regulator"). It therefore can buck (decrease) voltage and boost (increase) voltage. It is thus both a buck regulator and a boost regulator (a regulator is a kind of converter). "The V•I Chip Pre-Regulator Module (PRM) is a very efficient non-isolated regulator capable of both boosting **and bucking** a wide range input voltage." VICOR-1006, p. 1. The Datasheet discloses that the PRM provides the input voltage (annotated as "V2") to the VTM and performs an over-current protection process ("The PRM has a preset, maximum, current limit set point"). VICOR-1006, p. 8. *Compare to* Patent Owner's infringement allegations, VICOR-1005, 4-5; VICOR-1003, ¶98.

The PRM Datasheet describes a buck converter (the PRM) providing an input voltage to a resonant converter (the VTM), but does not disclose how the PRM performs the current limit. As stated in the Motivation to Combine section for this ground, a skilled artisan would have been motivated to implement the current limit by reducing the duty cycle of the PRM, as taught by Hwang. *See*, *e.g.*, VICOR-1007, 3:33-44. Thus, the over-current protection process is

implemented by controlling the duty cycle of the buck or boost converter in the PRM, which controls the output voltage of the PRM. Because the output voltage of the PRM is the input voltage to the VTM, the over-current protection process controls the input voltage to the VTM (resonant converter). VICOR-1003, ¶99.

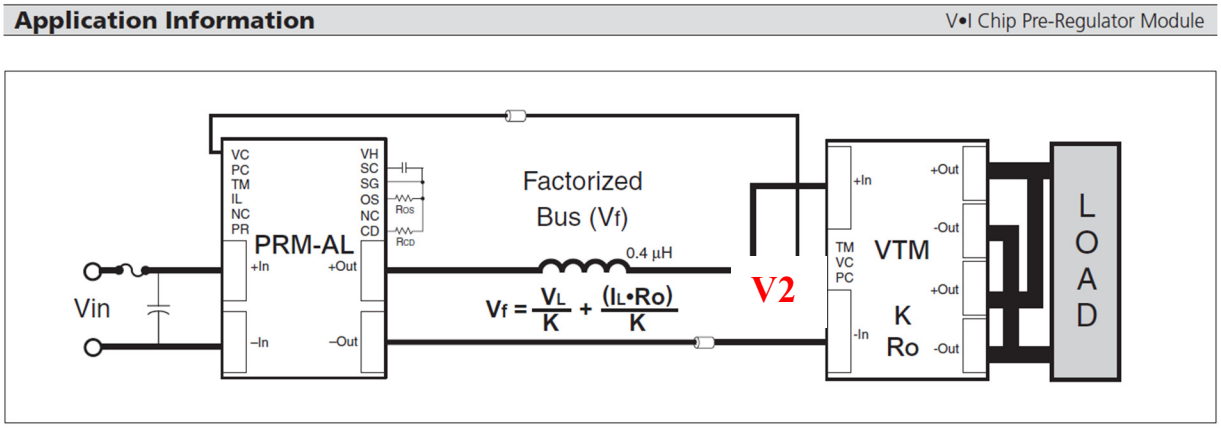

Figure 16 — Adaptive Loop compensation with soft start using the SC port.

VICOR-1006, p. 9.

[1c] a first controller, decreasing a duty cycle of a switching device of the buck converter to decrease the input voltage received by the resonant converter, when the resonant converter generates the over-current,

Under Patent Owner's Apparent Construction, the clause "when the resonant converter generates an over-current" is met when the PRM detects that its output current exceeds a current limit threshold (see Claim Construction section). VICOR-1005, 5-8.

Under Patent Owner's Apparent Construction, the Datasheet discloses that the PRM enforces a current limit based on its own output current, where that current limit is pre-set or externally-adjustable. VICOR-1006, p. 8-10; VICOR-

1003, ¶100.

The PRM Datasheet does not disclose how the current limit is performed, and so a skilled artisan would have turned to Hwang for that implementation detail. As discussed in the summary of Hwang and Motivation to Combine sections above, Hwang discloses a current limiting technique for a switching regulating power converter, which may be a buck or boost converter, in which, if "excessive output current is detected," the circuit is "controlled to reduce the switching duty cycle." VICOR-1007, Abstract, 3:51-57. When the switching duty cycle is reduced, the output voltage decreases. VICOR-1007, 3:38-50; VICOR-1003, ¶101.

[1d] [i] wherein, when an output current exceeds a first predetermined current, the first controller determines that the resonant converter generates the over-current, and [ii] restricts the output current of the resonant converter in the first predetermined current or in a second predetermined current higher than the first predetermined current.

Under Patent Owner's Apparent Construction, the first clause (clause [i]) is disclosed by the PRM Datasheet. VICOR-1006, p. 4, 8, 10; VICOR-1003, ¶¶102-105. Under Patent Owner's Apparent Construction the first clause is met when a PRM determines that a current limit threshold is reached. VICOR-1005, p. 9-10. The prior art PRM Datasheet likewise discloses that the PRM determines when the output current reaches a pre-programmed current limit, and thus exceeds a predetermined current just below that limit: "The PRM has a preset, maximum,

current limit set point" and has a pin that "may be used to reduce the current limit set point to a lower value." VICOR-1006, p. 8, 10. The PRM Datasheet further discloses that the current limit may be set to hold the output current at a maximum value of over 5 Amperes to under 1 Ampere:

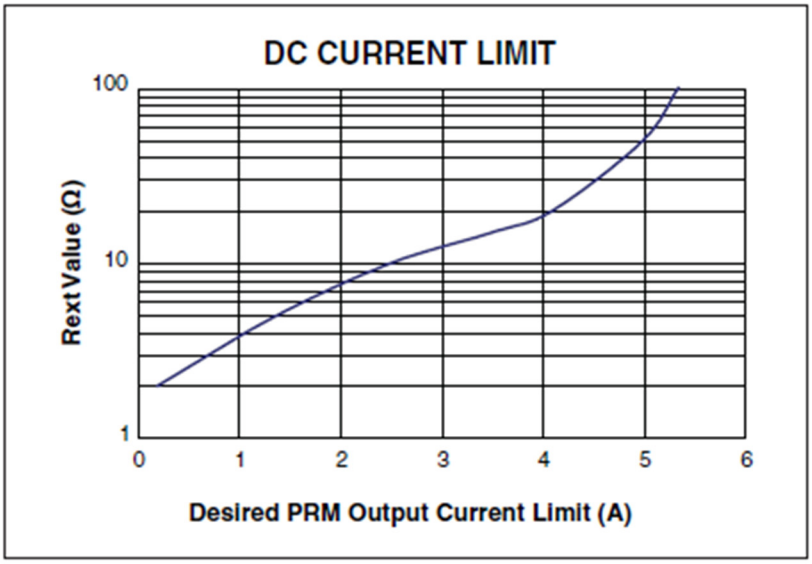

Figure 18 *— Calculated external resistor value for adjusting current limit, actual value may vary.*

VICOR-1006, p. 10. Under Patent Owner's Assumed Construction, when the PRM current exceeds its current limit then—by definition—the resonant converter "generates the overcurrent." VICOR-1005, pp. 9-10. As discussed with respect to Hwang, it would have been obvious to implement the current limit such that current limiting applies when the output current exceeds the current limit. VICOR-1007, 1:37-39.

The second clause of this claim limitation is likewise disclosed by the PRM Datasheet in combination with the White Paper. Upon triggering a current limit,

the PRM will restrict the output current of the PRM to remain within the preset, maximum value, which will likewise restrict the output current of the VTM to remain within a preset, maximum value because, as Patent Owner acknowledges in its infringement allegations, "the VTM's output is proportionally related to its input (where the VTM's input comes from the PRM)." VICOR-1005, p. 10; *see also* VICOR-1006, p. 1 ("VTMs perform true voltage division and current multiplication"); VICOR-1008, p. 2 ("VTM can be considered as a linear voltage / current converter with a flat output impedance").

This claim recites "an output current" and not the output current of a particular device. Thus, this claim is met in either of two ways based on Patent Owner's Apparent Construction: Either the PRM's output current exceeds the "first predetermined current" or the VTM's output current, which is proportional to the output current of the PRM, exceeds the "first predetermined current."

The PRM senses its own output current and this equates to sensing a signal relating to the VTM output current under Patent Owner's Assumed Construction, which asserts that "the overcurrent in the PRM—thusly—equates to an overcurrent in the VTM." VICOR-1005, p. 6-7, 10, 14, and 17; VICOR-1003, ¶105.

5. Claim 2

[2] The resonant conversion system as claimed in claim 1, wherein the duty cycle of the buck converter is increased from a minimum duty cycle when the resonant conversion system is powered on, such that the input

voltage of the resonant converter is progressively increased for performing the over-current protection process.

The PRM Datasheet in combination with the White Paper and Hwang discloses this claim limitation. VICOR-1003, ¶¶106-108. The PRM Datasheet discloses that the PRM is a "buck-boost regulator" and that it provides an input voltage to the VTM.

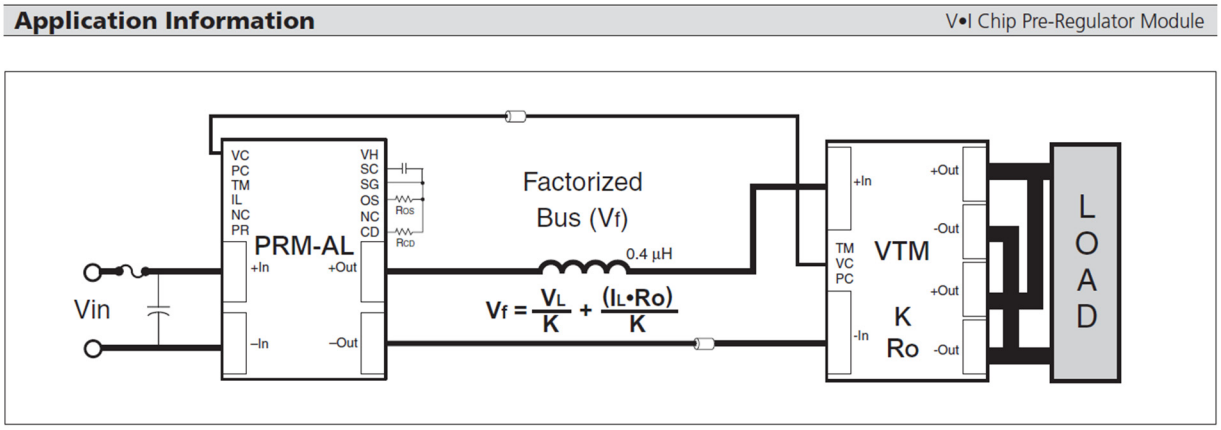

Figure 16 — Adaptive Loop compensation with soft start using the SC port.

VICOR-1006, p. 9, 1 (disclosing "buck-boost"). The White Paper discloses that the VTM is a resonant converter. VICOR-1008, 2-3. The PRM Datasheet discloses that an external capacitor at a control pin can "control the output voltage slew rate for soft start." VICOR-1006, p. 9. A skilled artisan would understand that a "slew rate" is the rate of change and that a soft start slew rate is the control of the speed at which the output voltage can rise from essentially zero to the desired voltage. This is done to prevent a current inrush during startup of the device, and is thus part of an overcurrent protection process. VICOR-1003, ¶107;

VICOR-2020, p. 1-2.

In the combination, Hwang provides details for implementing the soft start functionality. "The switching power converter includes a soft-start circuit which slowly increases a switching duty cycle upon power-up." VICOR-1007, Abstract. Hwang explains that the voltage on "soft-start capacitor C2 is initially a low voltage level" and "[o]ver time, a current source 126 charges the capacitor C2." VICOR-1007, 4:25-42. As the soft-start signal increases, "so does the duty cycle of the switch SW1" and "[a]s a result, the output voltage Vo increases." *Id.*, 4:34-36. Thus, in the combination, a skilled artisan would implement a soft start as taught by Hwang that would progressively increase in a relatively slow and controlled manner a duty-cycle from a minimum value until the duty cycle provided the desired output voltage. The result would be a relatively slow ramp up in output voltage from near zero to the desired voltage. The "duty cycle limiter" of the soft-start circuit "provides a soft-start in which the switching duty cycle is gradually increased upon powerup." VICOR-1007, 1:33-55, 7:52-54; VICOR-1003, ¶108.

6. Claim 3

[3] The resonant conversion system as claimed in claim 1, further comprising at least one detection device detecting a signal corresponding to the output current of the resonant converter and outputting a first detection result to the first controller, such that the first controller, according to the first detection result, determines whether the resonant converter generates the over-current.

Both the PRM Datasheet and Hwang render obvious this limitation. VICOR-1003, ¶109-112. The PRM Datasheet states that the "PRM has a preset, maximum, current limit set point" and that the current limit may be adjusted downward to specify a maximum output current roughly in the range of less than 1 ampere to over 5 amperes. VICOR-1006, 8, 10, Figure 18.

Adjusting Current Limit

The current limit can be lowered by placing an external resistor between the I_L and SG ports (see figure 18 for resistor values). With the I_L port open-circuit, the current limit is preset to be within the range specified in the output specifications table on Page 4.

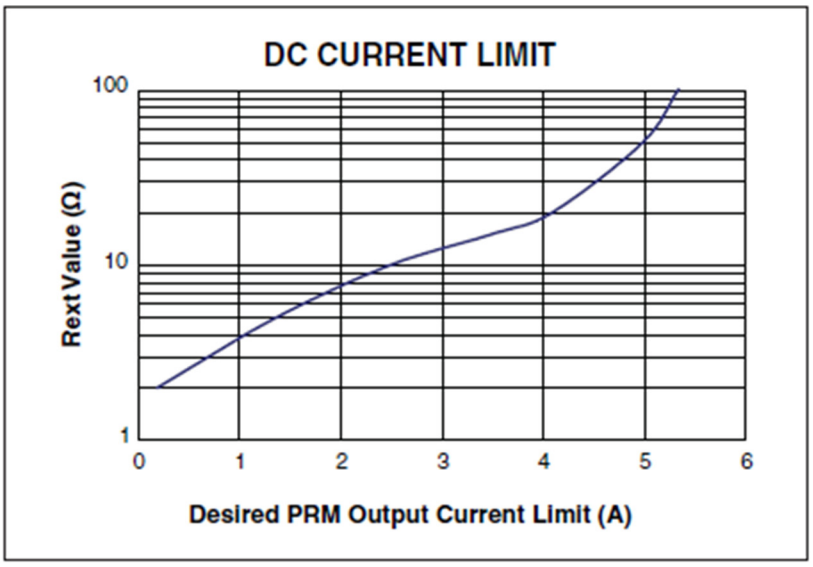

Figure 18 *— Calculated external resistor value for adjusting current limit, actual value may vary.*

A skilled artisan would have understood, and it would have been obvious, that for the current limit to function, there would be at least one detection device detecting a signal corresponding to the output current **<u>of the PRM</u>** and outputting the result to a controller, such that the controller determines whether the PRM has

exceeded the current limit and is thus at over-current. Patent Owner states in its infringement allegations that an over-current at the PRM equates to an over-current at the VTM (the resonant converter) and that control over over-current at the PRM also controls over-current at the VTM (see discussion for claim construction and for claim 1). *See* VICOR-1005, 6-7.

Thus, under Patent Owner's Apparent Construction, the PRM's internal detection circuit that determines that the output current has reached the current limit equates to a circuit for detecting that the VTM is in an over-current state. For example, Patent Owner states that this claim is met because the PRM "provides an External Current Sense circuit." VICOR-1005, 10-12. The PRM datasheet discloses an internal current sense circuit. The internal / external distinction is not relevant to the claim. In either case, the circuit senses a signal corresponding to the output current of the VTM under Patent Owner's Apparent Construction and compares that signal with a threshold. VICOR-1003, ¶111.

In addition, Hwang teaches a detection device for detecting the output current of a buck or boost converter. Hwang teaches that a "current sensor 120 may be coupled to sense current in the converter 100" by sensing either "current in the inductor L" or "current in [] switch SW1 or [] switch SW2" and that "[i]n either case, the current sensor 120 senses a current that is representative of an output current provided to the load." VICOR-1007, 3:51-4:7, FIG. 1. Thus a

skilled artisan would look to Hwang for details on how to implement the internal current sense circuit of the PRM datasheet. Moreover, a skilled artisan would have known that some sort of detector would need to be used, and would therefore turn to other references, such as Hwang for the implementation details. VICOR-1003, ¶112. *See* discussion of motivation to combine for claim 1.

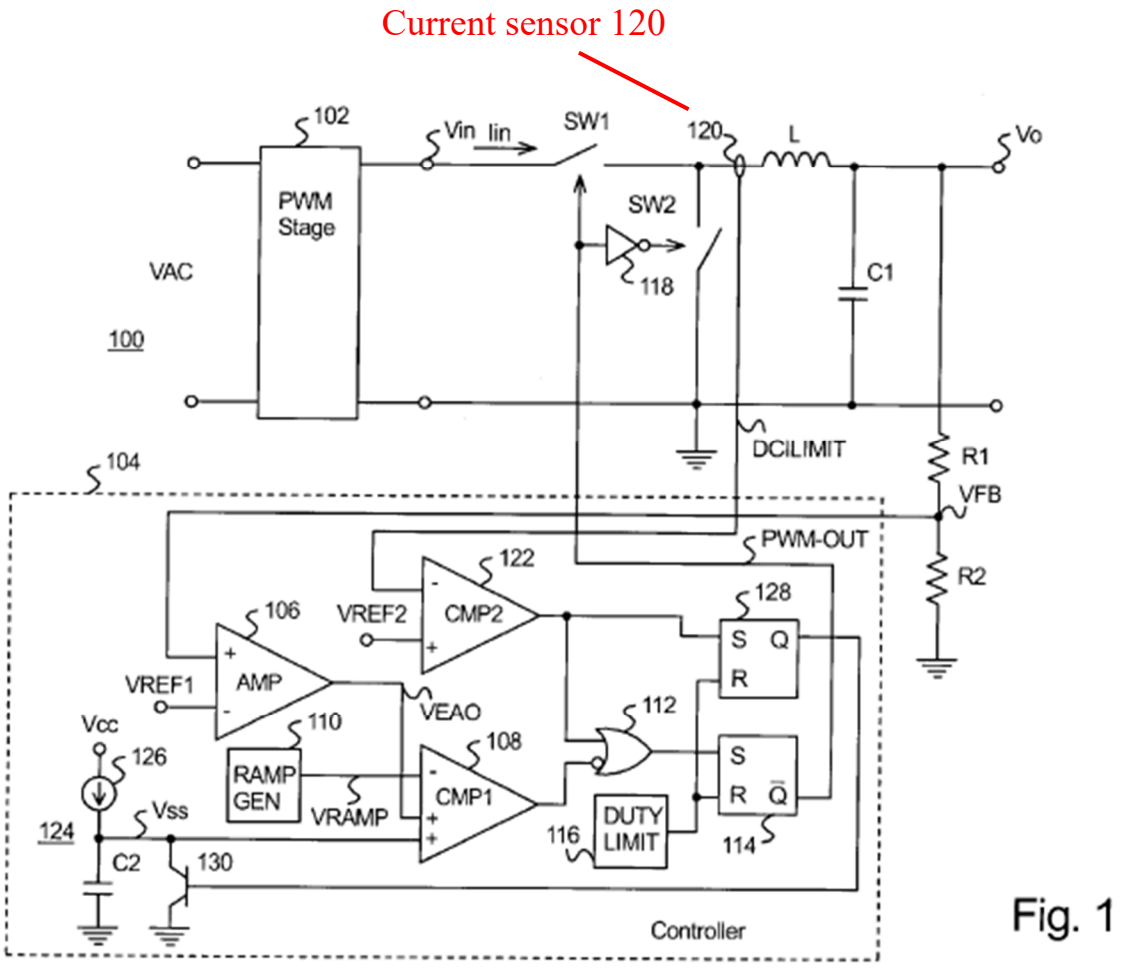

Fig. 1

7. Claim 9

[9] The resonant conversion system as claimed in claim 1, wherein the resonant converter is a regulated converter, a non-regulated converter or a half-regulated converter, and the buck converter is a half-regulated converter or a regulated converter.

The PRM Datasheet discloses wherein the resonant converter is a non-regulated converter (a VTM) and the buck converter is a regulated converter (a PRM): "The V*I Chip Pre-Regulator Module (PRM) is a very efficient non-isolated regulator capable of both boosting and bucking" and the "VTMs perform true voltage division and current multiplication." VICOR-1006, p. 1; VICOR-1003, ¶113.

8. Claim 10.

[10pre] A resonant conversion system, comprising:

See discussion for Ground 1, limitation [1pre]. VICOR-1003, ¶114.

[10a] a resonant converter;

The VTM (a resonant converter) receives an input voltage and generates an output voltage. *See* discussion for Ground 1, limitation [1a]. VICOR-1003, ¶115.

[10b] a buck converter, providing a DC voltage to serve as an input voltage of the resonant converter such that the resonant converter generates an output voltage; and

The PRM (a buck converter) provides a DC voltage to serve as an input voltage to the VTM, and the VTM converts the input voltage to an output voltage. *See* discussion for Ground 1, limitation [1b]. VICOR-1006, p. 1 (output voltage is in units of "Vdc"), 4 ("output voltage range" is 26 to 55 "Vdc"); VICOR-1003,

¶116.

[10c] a first controller, controlling the buck converter to decrease the input voltage received by the resonant converter for performing an over-current protection process, when determining that the resonant converter has generated an over-current,

The PRM Datasheet in combination with Hwang discloses the first controller that reduces the duty cycle of a buck converter to implement a current limit, which is part of an over-current protection process, which Patent Owner equates to determining that the resonant converter has generated an over-current. *See* discussion for Ground 1, limitation [1c]; VICOR-1005, 5-6; VICOR-1003, ¶117.

For this limitation, Patent Owner relies on the current sense at the output of the **PRM** and justifies its reliance on the PRM output (which is the VTM input) because the "VTM's output is proportionally related to its input." VICOR-1005, 13-17. Similarly, the PRM Datasheet discloses a current limit based on the sensed output current of the PRM, which is the input current to the VTM. *See* discussion for Ground 1, limitation [1c]; VICOR-1003, ¶118.

[10d] wherein, when an output current exceeds a first predetermined current, the first controller determines that the resonant converter generates the over-current, and restricts the output current of the resonant converter in the first predetermined current or in a second predetermined current higher than the first predetermined current.

See discussion for Ground 1, limitation [1d]; VICOR-1003, ¶119.

9. Claim 11

[11] The resonant conversion system as claimed in claim 10, wherein, when the resonant converter generates the over-current, the first controller decreases a duty cycle of a switching device of the buck converter to decrease the input voltage received by the resonant converter.

Under Patent Owner's Apparent Construction, when a VTM follows a PRM, "the over-current in the PRM—thusly equates to an overcurrent in the VTM" VICOR-1005, p. 14. Also, under Patent Owner's Apparent Construction, an "over-current" condition exists when a "current limit" is reached or exceeded.

Specifically, according to Patent Owner, the accused PRM "decreases the output voltage when a VTM over-current is reached, **e.g., when a current limit is reached**". VICOR-1005, p. 14 (emphasis added). Thus, Patent Owner maps the accused PRM's imposition of a current limit as a determination "that the resonant converter has generated an over-current." VICOR-1005, 13-14 (mapping of limitation [10c] onto the accused PRM / VTM topology).

The PRM Datasheet likewise discloses a current limit at the PRM (a buck converter) that decreases its output voltage, which is the input voltage to the VTM (a resonant converter), to implement the current limit. *See* limitation [10c].

The PRM Datasheet does not disclose that the decrease in output voltage is accomplished by a decrease of a duty cycle, but that implementation detail is disclosed by Hwang. *See* discussion for Ground 1, limitation [1c]; VICOR-1003, ¶¶120-122.

10. Claim 13

[13pre] An over-current protection method, comprising

The PRM Datasheet in combination with Hwang, and if necessary, the White Paper or the Electronic Design article, discloses an over-current protection method, which is the "over-current protection process" of limitation [1b]. *See* Ground 1, limitation [1b]; VICOR-1003, ¶123.

[13a] detecting a signal corresponding to an output current of a resonant converter to generate a first detection result;

The PRM Datasheet discloses detecting a signal corresponding to an output current of the PRM, which under Patent Owner's Apparent Construction, equates to a signal corresponding to an output current of a downstream VTM (resonant converter). VICOR-1006, p. 10, Fig. 18 (sets current limit to "desired PRM Output Current Limit" which requires detecting a signal corresponding to the output current). For example, Patent Owner relies on the current limit function of the PRM and states that the accused PRM "decreases the output voltage when a VTM over-current is reached, e.g., when a current limit is reached." VICOR-1005, 14. Moreover, Hwang discloses an output current detector that detects a signal corresponding to an output current that can be used in a switching regulator such as a PRM to implement a current limit. *See* discussion for Ground 1, claim [3]; VICOR-1003, ¶124.

[13b] determining whether the resonant converter generates an over-current according to the first detection result; and

This limitation is met under Patent Owner's Apparent Construction, because

the PRM uses the detection result (that a current limit has been reached) (*see* limitation [13a]) to determine whether a PRM current-limit is reached, which Patent Owner equates to determining whether the VTM (resonant converter) generates an over-current. *See* limitation [10c]. For example, in its infringement contentions, Patent Owner maps the determining step of claim 10 ("determining that the resonant converter has generated an overcurrent") onto the PRM determining that an over-current limit is reached. Patent Owner states that "when a VTM over-current is reached, e.g., when a current limit is reached in Remote Sense Operation," which is a mode of operation in which the PRM uses an external circuit to sense its output current. VICOR-1005, 13-14; VICOR-1003, ¶125.

[13c] controlling a buck converter to decrease an input voltage of the resonant converter for performing an over-current protection process, when the resonant converter generates the over-current,

See discussion for Ground 1, limitation [1c], [10c]; VICOR-1003, ¶126. Although a few words are different, this limitation is fully disclosed by the discussion of the "first controller" of limitations [1c] and [10c].

[13d] wherein, when the output current of the resonant converter exceeds a first predetermined current, it is determined that the resonant converter generates the over-current, and the output current of the resonant converter is restricted in the first predetermined current or a second predetermined current higher than the first predetermined current.

See discussion for Ground 1, limitation [1d], [10d]; VICOR-1003, ¶¶127-128. Although a few words are different, this limitation is fully disclosed by the

discussion of the "wherein" clause of limitation [1d] and [10d]. For example, claims 1 and 10 recite "when an output current exceeds a first predetermined current" and this claim recites "when the output current **of the resonant converter** exceeds a first predetermined current." Under Patent Owner's Assumed Construction, because the output current of the PRM is proportional to the output current of the VTM, when the PRM determines that a current limit is reached, this equates to determining that the VTM generates an over-current. For example, Patent Owner states that the accused PRM "determines when the output current exceeds a pre-programmed current limit in Adaptive Loop Mode (the brick-wall limit), and reduces the output voltage to prevent it from crossing that limit" and that the "VTM's output is proportionally related to its input [which] comes from the PRM." VICOR-1005, p. 9-10. Patent Owner concludes that "the overcurrent in the PRM—thusly—equates to an overcurrent in the VTM, and control of the PRM overcurrent controls the VTM overcurrent." *Id.*

The PRM Datasheet discloses the same functionality by disclosing that the PRM sets a current limit for its output and the PRM provides its output voltage, in at least one application, to a VTM. Because the current at the output of the VTM is proportional to the PRM output current, the PRM thereby also sets a current limit (the "first predetermined current" or the "second predetermined current") for the VTM under Patent Owner's reasoning for the accused PRM-VTM

configuration. VICOR-1006, p. 1, 9; VICOR-1003, ¶128.

11. Claim 17

[17pre] An over-current protection method, comprising

The PRM-VTM configuration of claim 1 discloses an over-current protection method. *See* discussion for Ground 1, limitations [1b]-[1d], [2] (over-current process implemented via current limit and soft start). VICOR-1003, ¶129.

[17a] progressively increasing a duty cycle of a buck converter from a minimum duty cycle when a resonant conversion system is powered on, such that an input voltage of a resonant converter is progressively increased;

In the combination, the PRM Datasheet discloses a soft start capability, which those of skill in the art would understand is the progressive increase of the output voltage of the PRM, which in the combination is the input voltage to the VTM (a resonant converter). And Hwang discloses that a soft start circuit may be implemented by progressively increasing the duty cycle of a buck converter from a minimum duty cycle to the duty cycle providing the regulated voltage when the system is powered on. This limitation is thus met. *See* discussion for Ground 1, claim [2]. VICOR-1003, ¶130.

[17b] detecting a signal corresponding to an output current of the resonant converter to generate a first detection result;

The PRM Datasheet discloses that the PRM has a current limit that limits the output current of the PRM, and that the current limit is adjustable by an external signal. *See* discussion for Ground 1, limitation [1d]. Under Patent Owner's

Assumed Construction, because the output current of the PRM is proportional to the output current of the VTM, when the PRM determines that a current limit is reached, this equates to determining that the VTM generates an over-current. A skilled artisan would understand that the current limit would sense a signal that corresponds to the output PRM current and that the output PRM current corresponds to the output current of the VTM (which is proportional to the output current of the PRM). Thus, under Patent Owner's Assumed Construction, the current limit circuit detects a signal that corresponds to the output current of the VTM (a resonant converter) to generate a first detection result. *See* limitations [1a]-[1d]. In addition, Hwang discloses the detecting of a signal corresponding to the output current of the buck converter, which would also correspond to the output current of the downstream VTM (a resonant converter). *See* discussion for Ground 1, limitation [1c] and claim [3]; VICOR-1003, ¶131.

[17c] determining whether the resonant converter generates over-current according to the first detection result; and

See discussion for claim [3]. VICOR-1003, ¶132.

[17d] controlling the buck converter to decrease the input voltage of the resonant converter for performing an over-current protection process, when the resonant converter generates the over-current,

See discussion for Ground 1, limitation [1c] and [10c]. Whereas limitation [10c] recites "when determining that the resonant converter has generated an over-current" and this limitation recites "when the resonant converter generates the

over-current," the analysis of limitation [1c] and [10c] nonetheless applies. Under Patent Owner's Assumed Construction, when the PRM has determined that the current limit has been reached, the resonant converter has generated an over-current. VICOR-1003, ¶133.

[17e] wherein the over-current protection process comprises restricting the output current of the resonant converter in a first predetermined current or in a second predetermined current higher than the first predetermined current.

See discussion for Ground 1, limitation [1d] and [10d]. VICOR-1003, ¶134. The wording of this limitation is different from limitation [1d] and [10d], but the analysis there applies equally to this limitation.

12. Claim 18

[18] The resonant conversion system as claimed in claim 1, wherein when the resonant converter generates the over-current, the buck converter further decreases the input voltage received by the resonant converter for performing the over-current protection process.

Under Patent Owner's Assumed Construction, the clause "when the resonant converter generates the over-current" is met when the PRM determines that the current limit has been reached. When the current limit has been reached, the PRM (buck converter) further decreases its output voltage (the input voltage received by the VTM, which is a resonant converter) for performing the over-current protection process. *See* discussion for Ground 1, limitations [1c]-[1d] and [10c]-[10d]; VICOR-1003, ¶135.

B. GROUND 2 – All Challenged Claims Would Have Been Obvious over the White Paper in view of Hwang

This Ground differs from Ground 1 in at least one significant respect. Ground 1 relies on the PRM's own current limit functionality that is based on the **PRM's** current limit set-point, which is set independent of the current-handling capability of the downstream VTM pursuant to the Patent Owner's Assumed Construction (based on its infringement allegations in the co-pending litigation).

This Ground establishes that it would have been obvious to modify the operation of the PRM to base its current limit threshold on the VTM's current handling capability, and thus the current limit would be based on whether the VTM has exceeded predetermined current threshold specified for the VTM. In other words, this ground uses the VTM's over-current threshold rather than the PRM's current limit threshold to control the PRM current limit.

1. Overview of the White Paper

The White Paper presents Vicor's Factorized Power Architecture, which uses a "Pre-Regulator Module (PRM)"—"An efficient buck-boost" to provide an output regulated voltage either that is below the input voltage (buck) or above the input voltage (boost). VICOR-1008, p. 4. The output from the PRM provides its output to the input of a VTM, which the White Paper describes as "a wide voltage range input, high efficiency voltage transformation unit using a proprietary Zero Current Switching-Zero Voltage Switching (ZCS-ZVS) Sine Amplitude

Converter™ (SAC™)." VICOR-1008, p. 2, 5-6. The White Paper discloses that the VTM is a resonant converter: "The control architecture locks the operating frequency to the power train resonant frequency." VICOR-1008, p. 2. The White Paper also states that the "VTM can be considered a fixed-ratio DC-DC transformer." VICOR-1008, p. 4. A skilled artisan would have known that a DC-DC transformer provides an output current proportional to its input current. VICOR-1003, ¶¶138-140.

The White Paper provides three configurations for providing regulation of the PRM output voltage: Local loop control, adaptive loop control, and remote loop control, each pictured here:

Figure 7
FPA with local loop control

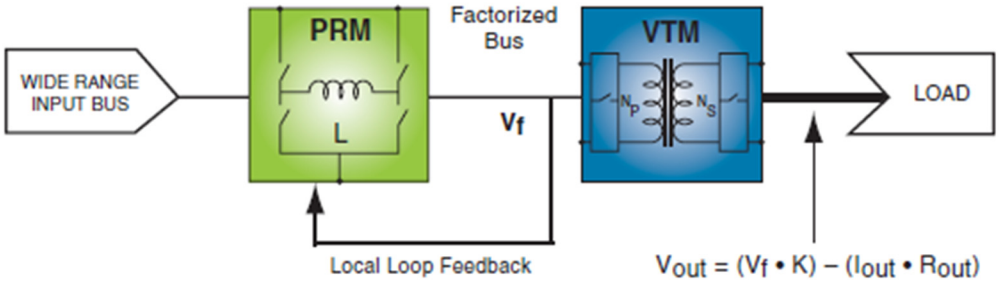

Figure 8
FPA with adaptive loop control

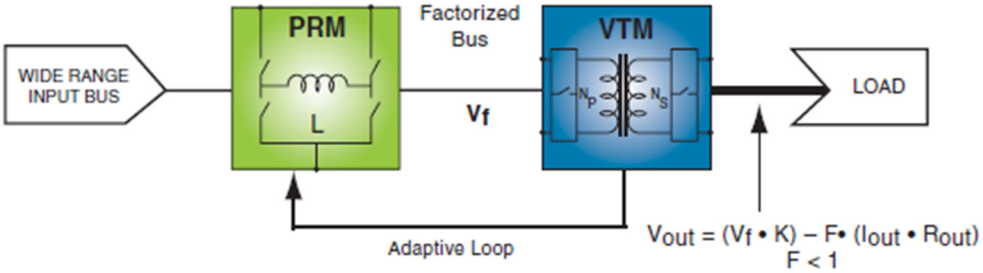

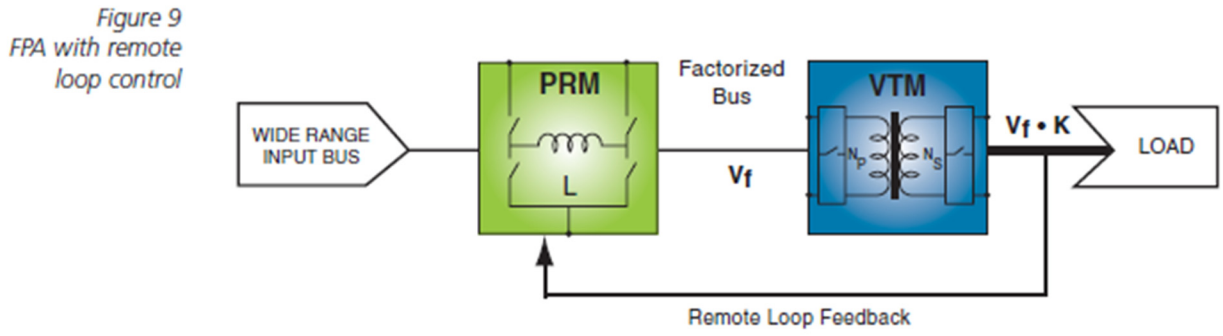

VICOR-1008, pp. 5-6. Thus, the White Paper discloses a buck converter (PRM) that provides an input voltage to a resonant converter (VTM). The White Paper does not disclose how over-current protection is handled in the configurations shown. However, a skilled artisan would have known over-current protection is important and common because a power converter should avoid excessive current that could damage itself or other components or generate excessive heat that can start a fire. VICOR-1003, ¶140. For example, the '580 Patent acknowledges that "over-current protection (OCP) of resonant converters is an important issue" (VICOR-1001, 1:25-48) and that "conventional method[s] of protecting a resonant converter with over-current protection" existed in the art. VICOR-1001, 1:49-2:14.

2. Summary of the Combination of the White Paper and Hwang

A skilled artisan seeking to implement a system such as that described in the White Paper would recognize that over-current is a problem and would look to other references for teachings about implementing over-current protection in such

a system. A skilled artisan would naturally turn to a reference such as Hwang for its teaching of an over-current protection technique. In the combination, the PRM would, based on the teachings of Hwang, reduce its duty cycle when a predetermined current threshold is exceeded. *See* summary of Hwang in Ground 1; VICOR-1003, ¶¶141-144.

There would have been three scenarios for setting the current limit threshold for the PRM-VTM system—and each would have been obvious. Option (1): if the PRM can handle more power than the VTM, the current limit would be set to protect the VTM from over-current, and thus the current limit would be set based on the VTM's current-handling capability; (2) if the VTM can handle more power than the PRM, then the current limit would be set to protect the PRM from over-current, and the current limit would be based on the PRM's current-handling capability, or (3) the products are designed with equal current-handling capability in which case they have the same current limit threshold. VICOR-1003, ¶142.

A skilled artisan would considered each of these scenarios as possible approaches, and the influencing factors include non-technical considerations such as price or part availability. Thus, for example, if PRM regulators were generally available with higher current-handling capability than the available resonant converters, then option (1) would be selected. VICOR-1003, ¶143.

The combination presented here is based on scenario (1). When the system

is using a PRM (or other buck regulator) providing power to a VTM (or other resonant DC-DC transformer) and the buck regulator can handle more power than the resonant converter, a skilled artisan would have set the current limit threshold based on the current-handling capability of the VTM to protect the VTM from over-current. In this circumstance, the PRM would never reach an over-current condition. Rather, the PRM would operate within its normal range. Thus, the skilled artisan would ignore the higher PRM over-current threshold. VICOR-1003, ¶144.

3. Motivation to combine the references

A skilled artisan would have combined the White Paper and Hwang in the manner claimed for a variety of reasons:

First, the White Paper discloses a DC to DC converter system comprising two switching converters (a PRM and a VTM), and a skilled artisan would have been concerned with excessive currents caused by faulty loads or shorts, and would have sought to include over-current protection in the system. Hwang provides a technique for addressing "excessive output current" in "a switching power converter." VICOR-1007, Abstract. Moreover, the '580 Patent admits that the problem of over-current was a known problem, and thus a skilled artisan would have sought out known solutions. VICOR-1003, ¶¶145-146.

Second, the PRM is a "buck-boost converter" and Hwang states that its

technique is applicable to both "buck" and "boost" converters. VICOR-1008, p. 4; VICOR-1008, 3:51-57. VICOR-1003, ¶147.

Third, a skilled artisan would need to decide where to provide over-current protection, and there are a finite number of locations in the PRM – VTM configuration. Either (a) protection is provided at the PRM, (b) protection is provided at the VTM, or (c) protection is provided at both the PRM and VTM. A skilled artisan would have been motivated to investigate over-current protection techniques for the PRM and VTM, and upon reading Hwang, a skilled artisan would have been motivated to use duty cycle control to provide over-current protection in the buck converter because a typical buck converter already possessed a duty cycle control circuit for voltage regulation. In addition, a skilled artisan would have been motivated by Hwang's teaching that duty cycle control provides benefits such as allowing the amount of current limiting to be tailored to the severity of the over-current. VICOR-1007, 1:33-56, 5:6-20; VICOR-1003, ¶148. And, because the PRM – VTM configuration may be viewed as a single two-stage power converter, a skilled artisan would be motivated to provide over-current protection in one place—in the PRM—and avoid the complexity of having two over-current protection schemes, one in the PRM and one in the VTM. VICOR-1003, ¶148.

Fourth, the inclusion of the Hwang's duty cycle current limiting would be

merely the application of a known technique (duty cycle limiting) to a known device (a buck or boost converter) to achieve predictable results. In the combination each reference would continue to work the way it always had. VICOR-1003, ¶149.

A skilled artisan would have had a reasonable expectation of success given that modifying the duty cycle control of a buck converter was well within the level of ordinary skill. VICOR-1003, ¶149.

Fifth, a skilled artisan would have been motivated by the disclosure in the White Paper of using the PRM module to achieve "soft start." VICOR-1008, p. 4. That disclosure would remind the skilled artisan that "soft start" is important to prevent excessive currents at start-up and the skilled artisan would have desired to prevent excessive currents at other times as well. Since "soft start" (a type of overcurrent protection) is implemented in the PRM, a skilled artisan would naturally consider implementing other over-current protection techniques in the PRM as well. VICOR-1003, ¶150.

A skilled artisan would have had a reasonable expectation of success because the combination seeks to modify known power converter topologies (the buck-boost regulator) to add a relatively simple circuit (a feedback circuit based on sensed current as an input to a duty cycle controller) that would have been within the ordinary skill in the art. The buck-boost regulator would typically have a duty

cycle controller for voltage regulation, and it would have been within the skilled artisan's ability to add current feedback for current limiting. VICOR-1003, ¶151.

4. Claim 1

[1pre] A resonant conversion system, comprising

The White Paper discloses a resonant conversion system. It discloses a "PRM," which is a "Buck-Boost Regulator," that provides its output to a VTM, which is a "which is a "Sine Amplitude Converter" with a "control architecture [that] locks the operating frequency to the power train resonant frequency." VICOR-1008, p. 2, 4-6; VICOR-1003, ¶152.

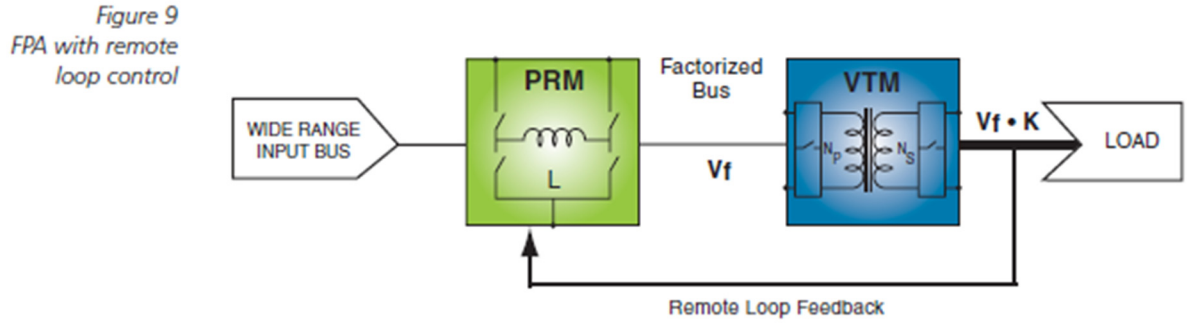

[1a] a resonant converter, receiving an input voltage to generate an output voltage;

As shown in Figure 9 of the White Paper, reproduced immediately above, the VTM (resonant converter) receives an input voltage (V_f) to generate an output voltage (V_f*k). VICOR-1008, 2, 5-6. VICOR-1003, ¶153.

[1b] a buck converter, providing the input voltage and controlling the input voltage for performing an over-current protection process; and

The PRM is a buck converter that provides its output voltage as an input

voltage to the VTM. VICOR-1008, 4-5.

In the combination with Hwang, Hwang teaches an over-current protection process using a duty cycle limiter to avoid excessive currents. VICOR-1007, 1:32-50; *see* Ground 1, discussion of Summary of Hwang. The duty cycle limiter controls the output voltage of the buck converter in the combination, and thus controls the input voltage to the resonant converter for performing an over-current process (current limiting). VICOR-1007, 1:32-50, 3:51-57, 4:7-17, 4:43-5:20*; see* Ground 1, Summary of Hwang; VICOR-1003, ¶¶154-155.

[1c] a first controller, decreasing a duty cycle of a switching device of the buck converter to decrease the input voltage received by the resonant converter, when the resonant converter generates the over-current,

In the White Paper / Hwang combination, a controller (such as Hwang's "controller 104" or other suitable controller) would provide a "duty cycle limiter" that decreases the duty cycle of "switch SW1" of the "buck" or "boost" converter to decrease its output voltage when the controller detects that its "output current exceed[s] [a] predetermined level." VICOR-1007, 1:32-50, 3:51-57, 4:7-17, 4:43-5:20; *see* Ground 1, Summary of Hwang. The output of the PRM is the input voltage (V_f) received by the resonant converter. VICOR-1003, ¶¶156-158.

Figure 9
FPA with remote loop control

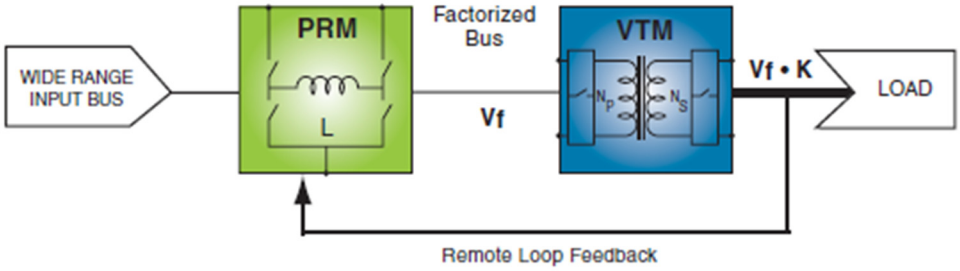

The White Paper teaches that the PRM-VTM "combination . . . creates an isolated, regulated DC-DC converter" that provides power to a load. VICOR-1008, p. 5. Hwang teaches a circuit that "senses a current that is representative of an output current provided to the load." VICOR-1007, 3:62-64. In the combination, a skilled artisan would have sensed a current representative of an output current provided to the load (the output of the VTM). The sensing would take place either at the output of the VTM or at the output of the PRM (which has a current proportional to the current at the output of the VTM in the configuration shown).

As discussed in the summary of the combination, a skilled artisan designing a PRM-VTM combination for the scenario where the PRM can handle more power than the VTM would have set the current threshold at the PRM to a predetermined value that would indicate a VTM over-current condition. Thus, when the VTM exceeds it normal operating current, the PRM (with a duty cycle current limiter as taught by Hwang) would reduce its duty cycle, which would reduce its output voltage and output current, and thus reduce the input voltage and current to the

VTM. *See* Ground 1, Summary of Hwang; Ground 2, Summary of the Combination of the White Paper and Hwang; VICOR-1003, ¶158.

[1d] [i] wherein, when an output current exceeds a first predetermined current, the first controller determines that the resonant converter generates the over-current, and [ii] restricts the output current of the resonant converter in the first predetermined current or in a second predetermined current higher than the first predetermined current.

See discussion for Ground 2, limitation [1c]. In the White Paper / Hwang combination, the current limit is based on a predetermined current threshold as taught by Hwang, which would restrict the current to that predetermined threshold. *See*, *e.g.*, VICOR-1007, 3:33-35. The threshold would be set based on the VTM current-handling capability in the scenario where the PRM is able to handle more power than the VTM. *See* Ground 2, limitation [1c]. [i] Thus, the PRM would determine that the VTM has generated an over-current by comparing a signal representative of the output current of the VTM with the VTM current threshold. [ii] As discussed for Ground 2 limitation [1c], in response to a determination that the VTM first predetermined current has been exceeded, the output current of the VTM is restricted in the first predetermined current. For example, the PRM current limiter would trigger a duty cycle reduction when the predetermined threshold based on the VTM's current-handling capabilities is reached or exceeded. The reduction in duty cycle causes the current to drop and the duty cycle limiter would be turned off when the current falls below the current limit.

VICOR-1003, ¶159.

5. Claim 2

[2] The resonant conversion system as claimed in claim 1, wherein the duty cycle of the buck converter is increased from a minimum duty cycle when the resonant conversion system is powered on, such that the input voltage of the resonant converter is progressively increased for performing the over-current protection process.

The White Paper discloses that the PRM (a buck-boost converter) has a soft start, which a skilled artisan would have recognized is a technique to slowly increase the output voltage of the buck-boost converter (which is the input voltage of the resonant converter) for performing over-current protection. VICOR-1008, p. 4 (referring to "soft start" in PRM); VICOR-1003, ¶160. In the White Paper / Hwang combination, Hwang specifically teaches a "soft-start in which the switching duty cycle is gradually increased upon powerup" to gradually increase the output voltage of the converter (which is an input voltage to the VTM) to the regulated voltage. *See* Ground 1, claim [2]; VICOR-1007, 1:46-51; VICOR-1003, ¶161.

6. Claim 3

[3] The resonant conversion system as claimed in claim 1, further comprising at least one detection device detecting a signal corresponding to the output current of the resonant converter and outputting a first detection result to the first controller, such that the first controller, according to the first detection result, determines whether the resonant converter generates the over-current.

In the White Paper / Hwang combination, the "current sensor" of Hwang

"senses a current that is representative of an output current provided to the load." VICOR-1007, 3:62-64. In the combination the output current provided to the load is the output current of the VTM, and thus the sensor is a detection device detecting a signal corresponding to the output current of the resonant converter and outputting a first detection result to the first controller in the PRM (buck-boost converter). The detection device, for example, would sense the output current of the PRM, the output current of the VTM, or other representative signal in the circuit. VICOR-1003, ¶162.

7. Claim 9

[9] The resonant conversion system as claimed in claim 1, wherein the resonant converter is a regulated converter, a non-regulated converter or a half-regulated converter, and the buck converter is a half-regulated converter or a regulated converter.

The White Paper states that the resonant converter is a non-regulated converter (it is a "fixed-ratio DC-DC transformer" and "can be considered [] a linear voltage / current converter"). VICOR-1008, p. 2, 4; VICOR-1003, ¶163.

8. Claim 10.

[10pre] A resonant conversion system, comprising:

See discussion for Ground 2, limitation [1pre]. VICOR-1003, ¶164.

[10a] a resonant converter;

In the White Paper / Hwang combination, the VTM (a resonant converter) receives an input voltage and generates an output voltage. *See* discussion for

Ground 2, limitation [1a]. VICOR-1003, ¶165.

[10b] a buck converter, providing a DC voltage to serve as an input voltage of the resonant converter such that the resonant converter generates an output voltage; and

In the White Paper / Hwang combination, the PRM (a buck converter) provides a DC voltage to serve as an input voltage to the VTM, and the VTM converts the input voltage to an output voltage. *See* discussion for Ground 2, limitation [1b]. The VTM is a "DC-DC transformer" and the combination provides a "DC-DC converter" and thus the PRM output is also DC. VICOR-1008, p. 4,5. Further, the PRM is a buck-boost converter which is a DC converter. VICOR-1008, p. 3, 5; VICOR-1003, ¶166.

[10c] a first controller, controlling the buck converter to decrease the input voltage received by the resonant converter for performing an over-current protection process, when determining that the resonant converter has generated an over-current,

In the White Paper / Hwang combination, the first controller reduces the duty cycle of a buck converter to implement a current limit, which is part of an over-current protection process, based on a sensed current at the output of the VTM and the VTM's predetermined current threshold. *See* discussion for Ground 2, limitation [1c]. VICOR-1003, ¶167.

[10d] wherein, when an output current exceeds a first predetermined current, the first controller determines that the resonant converter generates the over-current, and restricts the output current of the resonant converter in the first predetermined current or in a second predetermined current higher than the first predetermined current.

See discussion for Ground 2, limitation [1d]; VICOR-1003, ¶168.

9. Claim 11

[11] The resonant conversion system as claimed in claim 10, wherein, when the resonant converter generates the over-current, the first controller decreases a duty cycle of a switching device of the buck converter to decrease the input voltage received by the resonant converter.

In the White Paper / Hwang combination, a signal corresponding to the VTM output current is fed back to the controller at the PRM and the controller at the PRM is set such that current limiting is applied when the sensed current reaches the predetermined VTM current threshold and thus the resonant converter generates an over current. When current limiting is applied, Hwang teaches that the controller at the buck converter decreases a duty cycle of the buck converter switching device to decrease the output voltage of the buck converter, which is the input voltage to the VTM. *See* discussion of limitation [1c]. In a buck converter, if the duty cycle is decreased, the output voltage decreases because less energy is transferred from input to output in every cycle. "Thus, the switching duty-cycle is reduced which tends to reduce the output voltage Vo." VICOR-1007, 3:42-43; VICOR-1003, ¶169.

10. Claim 13

[13pre] An over-current protection method, comprising

The White Paper / Hwang combination discloses an over-current protection method, which is the "over-current protection process" of Ground 2, limitation

[1b]. *See* limitation [1b]; VICOR-1003, ¶170.

[13a] detecting a signal corresponding to an output current of a resonant converter to generate a first detection result;

In the White Paper / Hwang combination, the current sensor of Hwang detects a signal corresponding to the output current of the VTM (a resonant converter) to generate a first detection result (the feedback signal). *See* Ground 2, claim [3]. VICOR-1003, ¶171.

[13b] determining whether the resonant converter generates an over-current according to the first detection result; and

In the White Paper / Hwang combination, the controller at the PRM receives the feedback signal corresponding to the output of the VTM and the controller is configured with the operating current threshold of the VTM such that the controller determines whether the VTM (resonant converter) generates an over-current according to the sensed VTM output current. *See* discussion for Ground 2, claims [3] and [11]; VICOR-1003, ¶172.

[13c] controlling a buck converter to decrease an input voltage of the resonant converter for performing an over-current protection process, when the resonant converter generates the over-current,

See discussion for Ground 2, limitations [1c] and [10c]; VICOR-1003, ¶173. Although a few words are different, this limitation is fully disclosed by the discussion of the "first controller" of Ground 2, limitations [1c] and [10c].

[13d] wherein, when the output current of the resonant converter exceeds a first predetermined current, it is determined that the resonant converter generates the over-current, and the output current of the

resonant converter is restricted in the first predetermined current or a second predetermined current higher than the first predetermined current.

See discussion for Ground 2, limitations [1d] and [10d]. Although a few words are different, this limitation is fully disclosed by the discussion of the "wherein" clause of limitation [10d]. For example, claim 10 recite "when an output current exceeds a first predetermined current" and this claim recites "when the output current **of the resonant converter** exceeds a first predetermined current." In the combination, the over-current is detected when the output current of the VTM (resonant converter) exceeds the operating current threshold set for the VTM. VICOR-1003, ¶174.

11. Claim 17

[17] An over-current protection method, comprising

The White Paper / Hwang combination of claim 1 discloses an over-current protection method. *See* discussion for Ground 2, limitations [1b]-[1d], [2] (over-current process implemented via current limit and soft start). VICOR-1003, ¶175.

[17a] progressively increasing a duty cycle of a buck converter from a minimum duty cycle when a resonant conversion system is powered on, such that an input voltage of a resonant converter is progressively increased;

In the White Paper / Hwang combination, the White Paper discloses a soft start capability, which those of skill in the art would understand is the progressive increase of the output voltage of the PRM, which in the combination is the input

voltage to the VTM (a resonant converter). And Hwang discloses that a soft start circuit may be implemented by progressively increasing the duty cycle of a buck converter from a minimum duty cycle to the duty cycle providing the regulated voltage when the system is powered on. This limitation is thus met. *See* discussion for Ground 2, claim [2]. VICOR-1003, ¶176.

[17b] detecting a signal corresponding to an output current of the resonant converter to generate a first detection result;

In the White Paper / Hwang combination, Hwang's current sensor detects a signal corresponding to an output current of the resonant converter to generate a first detection result. *See* discussion for Ground 2, limitation [1c] and claim [3]; VICOR-1003, ¶177.

[17c] determining whether the resonant converter generates over-current according to the first detection result; and

See discussion for Ground 2, claim [3]. VICOR-1003, ¶178.

[17d] controlling the buck converter to decrease the input voltage of the resonant converter for performing an over-current protection process, when the resonant converter generates the over-current,

See discussion for Ground 2, limitations [1c] and [10c]. Whereas limitation [10c] recites "when determining that the resonant converter has generated an over-current" and this limitation recites "when the resonant converter generates the over-current," the analysis of limitation [1c] and [10c] nonetheless applies. In the combination, the controller at the PRM determines that the VTM generates an over-current. VICOR-1003, ¶179.

[17e] wherein the over-current protection process comprises restricting the output current of the resonant converter in a first predetermined current or in a second predetermined current higher than the first predetermined current.

See discussion for Ground 2, limitation [1d] and [10d]. VICOR-1003, ¶180.

The wording of this limitation is different from limitation [1d] and [10d], but the analysis there applies equally to this limitation.

12. Claim 18

[18] The resonant conversion system as claimed in claim 1, wherein when the resonant converter generates the over-current, the buck converter further decreases the input voltage received by the resonant converter for performing the over-current protection process.

As discussed, the White Paper / Hwang combination detects when the VTM generates an over-current and the controller in the PRM (buck converter) decreases the duty cycle of the buck converter, which decreases the buck converter output voltage, which decreases the input voltage received by the VTM (the resonant converter) for performing the over-current protection process. *See* discussion for Ground 1, limitations [10c]-[10d], [11]; VICOR-1003, ¶181.

V. PTAB DISCRETION SHOULD NOT PRECLUDE INSTITUTION

A. 35 U.S.C. §325(d) – *Advanced Bionics*

Advanced Bionics and the *Becton* factors strongly favor institution. *Adv. Bionics LLC v. MED-EL Elektromedizinische Gerate GmbH*, IPR2019-01469, Paper 6, 2020 WL 740292 (P.T.A.B. Feb. 13, 2020) ("*Advanced Bionics*") (precedential);

Becton, Dickinson and Co. v. B. Braun Melsungen AG, IPR2017-01586, Paper 8, 2017 WL 6405100 (P.T.A.B. Dec. 15 2017) ("*Becton*") (precedential).

Patent Owner did not cite any of the art presented in this Petition and did not consider any of the grounds presented here.

Accordingly, neither condition of the first prong of the *Advanced Bionics* framework is met, and there is no need to reach the second prong to resolve against discretionary denial under Section 325(d). *See*, *e.g.*, *Oticon Medical AB et. al. v. Cochlear Ltd.*, IPR2019-00975, Paper 15 at 20, 2019 WL 5237817, at *8 (P.T.A.B. Oct. 16, 2019) (precedential) ("There is new, noncumulative prior art asserted in the Petition…[f]or at least this reason, we determine not to exercise our discretion under § 325(d)").

B. 35 U.S.C. §314(a) – *Fintiv*

The grounds presented in this Petition strongly favor institution, even under the *Fintiv* framework, as clarified by the interim guidance to the PTAB from Director Vidal, dated June 21, 2022.

Factor 1 (Stay)—Neither party has requested a stay, but Petitioner intends to seek a stay, and the District of Delaware grants stays pending IPR more than 80% of the time, VICOR-1021, thus this factor strongly weighs against discretionary denial.

Factor 2 (Trial Date)—The First Amended Complaint in the co-pending

litigation (the "Litigation") was filed on January 26, 2024 (VICOR-1004), and no trial date has been set. The median time to trial in the District of Delaware is about three years. *See* Table C.5 (Period ending March 31, 2023), https://www.uscourts.gov/statistics/table/c-5/federal-judicial-caseload-statistics/2023/03/31. This proceeding is expected to be resolved in 18 months, more than a year before the Litigation even assuming the litigation was not stayed, and thus this factor weighs against discretionary denial.

Factor 3 (Investment)—The bulk of the investment in the Litigation has yet to occur. Petitioner has not yet answered, and no part of claim construction has begun. By the time of institution in this proceeding, the Litigation will be at a posture where "much of the district court's investment relates to ancillary matters untethered to the validity issue itself." *Sand Revolution II, LLC, v. Cont'l Intermodal Grp. – Trucking LLC*, IPR2019-01393, Paper 24 at 10-11, 2020 WL 3273334, at *4 (P.T.A.B. June 16, 2020).

Factor 4 (Overlap)—The factual overlap between this proceeding and the Litigation should be minimal because Petitioner has system art that cannot be presented in this Proceeding. Petitioner stipulates that should institution be granted, it will not raise in the Litigation same grounds as presented in this proceeding. *See Sand Revolution*, Paper 24 at 11-12, 2020 WL 3273334, at *5. Factor 4 thus weighs against discretionary denial.

Factor 6 (Merits and Other Circumstances)—The compelling merits presented in this Petition alone justifies institution in the public interest and outweighs any alleged inefficiencies due to the parallel litigation. Petitioner is presenting this petition within 2 months of the filing of the Amended Complaint in the Litigation, and has diligently developed the grounds presented against the Challenged Claims.

VI. CONCLUSION AND FEES

The Challenged Claims are unpatentable. Petitioner authorizes charge of fees to Deposit Account 06-1050.

VII. MANDATORY NOTICES UNDER 37 C.F.R § 42.8(a)(1)

A. Real Party-In-Interest Under 37 C.F.R. § 42.8(b)(1)

Vicor Corporation is the real party-in-interest.

B. Related Matters Under 37 C.F.R. § 42.8(b)(2)

The ’580 Patent is the subject of a civil action, *Delta Electronics, Inc. v. Vicor Corporation* 1-23-cv-01246, D. Del., filed November 1, 2023 and amended on January 26, 2024 (VICOR-1004). Petitioner is not aware of any other disclaimers, reexamination certificates, or IPR petitions addressing the ’580 Patent.

In addition, Petitioner is filing petitions today in IPR2024-00706 and IPR2014-00715 that each challenge claims of U.S. Patent 10,877,534, which Patent Owner is asserting in the same Delaware civil action as the ’580 patent.

Petitioner is also filing a petition today in IPR2024-00705 that challenges

claims in U.S. Patent No. 9,819,263. Patent Owner is asserting the '263 patent in *Delta Electronics, Inc. v. Vicor Corporation* 6-23-cv-00726, W.D. Tex., filed October 23, 2023. The lead inventor of the '263 patent is also the inventor of the '534 patent, and the two patents have overlapping subject matter.

C. Lead And Back-Up Counsel Under 37 C.F.R. § 42.8(b)(3)

Petitioner provides the following designation of counsel.

Lead Counsel	Backup counsel
Steven Katz, Reg. No. 43,706 Fish & Richardson P.C. 60 South Sixth Street, Suite 3200 Minneapolis, MN 55402 Tel: 202-783-5070 Fax: 877-769-7945 Email:IPR25808-0011IP1@fr.com	Lawrence Kolodney, Reg. No. 43,807 Ryan O'Connor, Reg. No. 60,254 60 South Sixth Street, Suite 3200 Minneapolis, MN 55402 Tel: 202-783-5070 Fax: 877-769-7945 PTABInbound@fr.com

D. Service Information

Please address all correspondence and service to the address listed above. Petitioner consents to electronic service by email at IPR25808-0011IP1@fr.com (referencing No. 25808-0011IP1 and cc'ing PTABInbound@fr.com, katz@fr.com, kolodney@fr.com and oconnor@fr.com).

Respectfully submitted,

Dated March 25, 2024

/Steven R. Katz/

Steven Katz, Reg. No. 43,706
Lawrence Kolodney, Reg. No. 43,807
Ryan O'Connor, Reg. No. 60,254
Fish & Richardson P.C.
60 South Sixth Street, Suite 3200
Minneapolis, MN 55402

T: 202-783-5070
F: 877-769-7945

(Control No. IPR2024-00704) Attorneys for Petitioner

CERTIFICATION UNDER 37 CFR § 42.24

Under the provisions of 37 CFR § 42.24(d), the undersigned hereby certifies that the word count for the foregoing Petition for *Inter Partes* Review totals 13,090 words, which is less than the 14,000 allowed under 37 CFR § 42.24.

Dated March 25, 2024

/Steven R. Katz/

Steven Katz, Reg. No. 43,706
Lawrence Kolodney, Reg. No. 43,807
Ryan O'Connor, Reg. No. 60,254
Fish & Richardson P.C.
60 South Sixth Street, Suite 3200
Minneapolis, MN 55402
T: 202-783-5070
F: 877-769-7945

Attorneys for Petitioner

CERTIFICATE OF SERVICE

Pursuant to 37 CFR §§ 42.6(e)(4)(i) *et seq.* and 42.105(b), the undersigned certifies that on March 25, 2024, a complete and entire copy of this Petition for *Inter Partes* Review and all supporting exhibits were provided by Federal Express, to the Patent Owner, by serving the correspondence address of record as follows:

Muncy, Geissler, Olds & Lowe, P.C.
125 S. Royal St.
Alexandria, VA 22314

/Diana Bradley/

Diana Bradley
Fish & Richardson P.C.
60 South Sixth Street, Suite 3200
Minneapolis, MN 55402
(858) 678-5667