UNITED STATES PATENT AND TRADEMARK OFFICE

BEFORE THE PATENT TRIAL AND APPEAL BOARD

HEWLETT PACKARD ENTERPRISE COMPANY and
CISCO SYSTEMS, INC.,
Petitioners,

v.

COBBLESTONE WIRELESS LLC,
Patent Owner.

Case IPR2024-00707
Patent 7,924,802

PATENT OWNER'S PRELIMINARY RESPONSE

TABLE OF CONTENTS

Page

I. INTRODUCTION 1

II. PETITIONERS FAIL TO SHOW THAT THEIR GROUNDS DISCLOSE OR RENDER OBVIOUS TWO "CENTER FREQUENCIES" (ALL GROUNDS, ALL CLAIMS).....3

A. The Claimed "Center Frequency" Refers To The Carrier Signal Frequency The Baseband Signal Is Upconverted To.....5

B. Petitioners' First Ground Does Not Disclose Or Render Obvious Two "Center Frequenc[ies]" (Ground 1, All Claims).....18

1. The 40 MHz Channel Of The Standard Petitioners Rely On Discloses Only One Center Frequency, Not Two.....19

2. Petitioners Fail To Demonstrate That Ground 1 Discloses Or Renders Obvious Two "Center Frequenc[ies]."....24

C. Petitioners' Second Ground Does Not Disclose Or Render Obvious Two Center Frequencies (Ground 2, All Claims).....33

III. THE PETITION SHOULD BE DENIED UNDER *FINTIV*.....41

A. *Fintiv* Factor 1: The District Court Has Not Granted A Stay, Nor Is There Any Evidence That A Stay Will Be Granted.....42

B. *Fintiv* Factor 2: The District Court Trial Will Occur Months Before The Deadline For A Final Written Decision In This Proceeding. 44

C. *Fintiv* Factor 3: Extensive Investment In The Parallel District Court Litigation. 46

D. *Fintiv* Factor 4: There Is Substantial Overlap Between This IPR And The District Court Proceeding.....47

E. *Fintiv* Factor 5: Petitioners Are The Defendants In The District Court Litigation. 51

F. *Fintiv* Factor 6: Other Circumstances, Including The Merits, Weigh Against Institution. 51

IV. CONCLUSION.....53

TABLE OF AUTHORITIES

Page(s)

FEDERAL CIRCUIT DECISIONS

In re Abbott Diabetes Care Inc.,
696 F.3d 1142 (Fed. Cir. 2012) 15

Akamai Techs., Inc. v. Cable & Wireless Internet Servs., Inc.,
344 F.3d 1186 (Fed. Cir. 2003) 17

Baran v. Med. Device Techs., Inc.,
616 F.3d 1309 (Fed. Cir. 2010) 12

Cal. Inst. of Tech. v. Broadcom Ltd.,
25 F.4th 976 (Fed. Cir. 2022) 49

Choon's Design, LLC v. IdeaVillage Prods. Corp.,
776 Fed App'x 691 (Fed. Cir. 2019) 15

Irdeto Access, Inc. v. Echostar Satellite Corp.,
383 F.3d 1295 (Fed. Cir. 2004) 16

Key Pharms. v. Hercon Lab. Corp.,
161 F.3d 709 (Fed. Cir. 1998) 17

Kinetic Concepts, Inc. v. Blue Sky Med. Grp., Inc.,
554 F.3d 1010 (Fed. Cir. 2009) 15

Medrad, Inc. v. MRI Devices Corp.,
401 F.3d 1313 (Fed. Cir. 2005) 14

Newell Window Furnishings, Inc. v. Springs Window Fashions Div., Inc.,
15 F. App'x 836 (Fed. Cir. 2001) 17

Oakley, Inc. v. Sunglass Hut Int'l,
316 F.3d 1331 (Fed. Cir. 2003) 17

Phillips v. AWH Corp.,
415 F.3d 1303 (Fed. Cir. 2005) 14

VirnetX, Inc. v. Cisco Sys.,
767 F.3d 1308, 1317 (Fed. Cir. 2014) 12, 15

Wisconsin Alumni Res. Found. v. Apple Inc.,
905 F.3d 1341 (Fed. Cir. 2018) 15

FEDERAL REGULATIONS

37 C.F.R. § 42.104 16

37 C.F.R. § 42.6 ..... 28, 32

37 C.F.R. § 42.65 27

ADMINISTRATIVE DECISIONS

3Shape Trios A/S v. Densys Ltd.,
IPR2021-00236, Paper 12 (May 20, 2021) 49

Apple Inc. v. Fintiv, Inc.,
IPR2020-00019, Paper 11 (Mar. 20, 2020)
(precedential) ..... passim

Cisco Sys., Inc. v. C-Cation Techs., LLC,
IPR2014-00454, Paper 12 (Aug. 29, 2014)
(informative) 28

CommScope Techs. LLC v. Dali Wireless, Inc.,
IPR2022-01242, Paper 23 (Feb. 27, 2023)
(precedential) 51

DIRECTV, LLC v. Qurio Holdings, Inc.,
IPR2015-02007, Paper 6 (Apr. 4, 2016) 28

EClinicalWorks, LLC v. Decapolis LLC,
IPR2022-00229, Paper 10 (Apr. 13, 2022) 44, 46

Ex Parte Beck, No. 2013-001609,
2014 WL 6737737 (PTAB Nov. 26, 2014) 16

Hulu LLC v. Sound View Innovations LLC,
IPR2018-01023, Paper 15 (Aug. 14, 2019) 17

Next Caller, Inc. v. TRUSTID, Inc.,
IPR2019-00961, Paper 10 (Oct. 16, 2019) 47

NHK Spring Co. v. Intri-Plex Technologies, Inc.,
IPR2018-00752, Paper 8 (Sept. 12, 2018)
(precedential) 41

Nine Energy Serv. Inc. v. NCS Multistage Inc.,
IPR2020-01615, Paper 18 (Mar. 24, 2011) 44

NXP USA, Inc. v. Impinj, Inc.,
PGR2022-00005, Paper 17 (May 2, 2022) 44

OpenSky Indus., LLC v. VLSI Tech. LLC,
IPR2021-01064, Paper 102 (Oct. 4, 2022)
(precedential) 51

Vector Flow, Inc. v. HID Global Corp.,
IPR2023-00353, Paper 8 (Jul. 17, 2023) 46

Xerox Corp. v. Bytemark, Inc.,
IPR2022-00624, Paper 9 (August 24, 2022)
(precedential) 27

EXHIBIT LIST	
2001	Declaration of Professor Todor V. Cooklev, Ph.D. [Cooklev-Decl.]
2002	Curriculum Vitae of Professor Todor v. Cooklev, Ph.D.
2003	Federal Court Management Statistics for the Eastern District of Texas through December 2023, *available at* https://www.uscourts.gov/statistics-reports/federal-court-management-statistics-december-2023 [Trial-Statistics]
2004	*Cobblestone Wireless, LLC v. Cisco Systems Inc. et al.*, No. 2:23-cv-00454, Docket as of June 26, 2024
2005	*Cobblestone Wireless, LLC v. Cisco Systems Inc. et al.*, No. 2:23-cv-00454, Defendants' Invalidity Contentions for U.S. Patent No. 7,924,802 (E.D. Tex., served Feb. 26, 2024) [Invalidity-Contentions]
2006	United States Patent No. 7,742,388 [Shearer-Patent]
2007	*MyPort, Inc. v. Samsung Electronics Co., Ltd*., No. 2:22-cv-00114, Dkt. No. 73 (E.D. Tex. Jun. 13, 2023) (order denying motion to stay) [Stay-Denial-Order]

I. INTRODUCTION

The Petition should be denied because Petitioners fundamentally misapprehend the invention, and its grounds fail to show disclosure or obviousness of the claims.

The claims require two "center frequenc[ies]," one greater than the other. Ex. 1001 ['802] cl. 1. The '802 patent mentions "center frequency" more than 90 times, including in its background of the invention and in every embodiment. It repeatedly, consistently and exclusively uses "center frequency" to mean the frequency of the carrier signal to which the baseband signal is up-converted. A baseband signal represents the data to be transmitted in its raw form. For various known reasons, the baseband signal cannot be wirelessly transmitted in its existing form and must be "up-converted" with a much higher frequency signal called a "carrier signal." Thus, the claims' requirement of two "center frequenc[ies]," one greater than the other, means that there has to be two up-conversions to two different carrier signals with two frequencies, one greater than the other. *See* Section II.A, *infra*.

Petitioners entirely disregard the specification and its clear teachings regarding the meaning of "center frequency." Instead, Petitioners assume that "center frequency" means the middle frequency of an alleged frequency range. It does not. Petitioners' Ground 1 relies on a 40 MHz channel in IEEE 802.11n. It is

indisputable that the entirety of the data within that 40 MHz channel is contained within a single baseband signal that is up-converted to a single carrier signal with a single center frequency. Thus, Ground 1 fails to disclose two "center frequenc[ies]" as claimed. Relying on an incorrect understanding of "center frequency," Petitioners argue that the frequency profile within the 40 MHz channel in IEEE 802.11n contains a small "dip" in the middle, which creates a different "frequency range" on each side of the dip. Petitioners then contend that the middle frequency for each supposed range on each side of the dip is the claimed "center frequency." As noted above, that is not what "center frequency" means in the context of the '802 patent. Furthermore, even Petitioners' allegation regarding the existence of a dip in the middle of the frequency profile of that 40 MHz channel is entirely unsupported, made-up and contradicted by the express disclosures of the reference itself. *See* Section II.B, *infra*.

Petitioners' second ground does not fare any better. There, Petitioners rely on Shearer, which discloses a 40 MHz channel within the context of the same IEEE 802.11n standard that formed the basis of Petitioners' first ground. Here, too, Petitioners incorrectly assume that "center frequency" means the middle frequency of a frequency range. It does not. Similar to IEEE 802.11n in Ground 1, the data within Shearer's 40 MHz channel is also indisputably contained within a single baseband signal that is up-converted to a single carrier signal with a single

center frequency. Thus, Shearer also does not disclose two "center frequenc[ies]." Ground 2 fails for similar reasons as Ground 1. *See* Section II.C, *infra*.

But the Board does not even need to reach the merits, as institution should be denied under *Fintiv*. Consistent with the Federal Court Management Statistics for the Eastern District of Texas, the parallel district court trial is scheduled to start months in advance of the expected final written decision here. No stay is likely to be granted in the district court, nor is there any evidence that one would be granted even if filed. By the time of the institution decision here, substantial work will have been completed in the district court. In fact, fact discovery will close, and Markman hearing will be heard, just shortly after the institution decision deadline here. Thus, all *Fintiv* factors support denial of institution. *See* Section III, *infra*.

For all of the foregoing reasons, as discussed in more detail below, the Petition should be denied.

II. PETITIONERS FAIL TO SHOW THAT THEIR GROUNDS DISCLOSE OR RENDER OBVIOUS TWO "CENTER FREQUENCIES" (ALL GROUNDS, ALL CLAIMS).

Claim 1 requires transmitting information across two frequency ranges, each with a different "***center frequency***." More specifically, "first information" must be transmitted across a "first frequency range having a ***first center frequency***," and simultaneously, "second information" must be transmitted across a "second frequency range having a ***second center frequency greater than the first center***

frequency." Ex. 1001 ['802] cl. 1. Thus, the claim requires two frequency ranges, each with a different "center frequency" with one "center frequency" greater than the other. Petitioners fail to demonstrate this limitation is disclosed and/or obvious under either of its grounds.

Petitioners present two grounds, one based on IEEE 802.11n (Ground 1) and the other on Shearer (Ground 2). Pet., 22. For both grounds, in arguing that the claimed two "center frequencies" are met, Petitioners identify two alleged frequency ranges in a signal, and point to the middle frequency in those alleged frequency ranges as the claimed "center frequency." The middle of a frequency range is not, however, a "center frequency" within the meaning of the '802 patent.

A "center frequency" is a focal point of the '802's claimed inventions that is discussed in the background of the invention and in every embodiment. In every instance, a "center frequency" always means precisely the same thing and it does not refer to the middle of a frequency range. Rather, a "center frequency" is the carrier signal frequency the baseband signal is upconverted to. As discussed in further detail in Section II.A, a baseband signal represents the information to be transmitted in its raw form. For various reasons, however, this signal cannot be transmitted as is and, instead, the frequency of the baseband signal must be "upconverted" with a carrier signal suitable for transmission. The "center

frequency," as the '802 makes clear, refers to the frequency of the carrier signal to which the baseband signal is upconverted. *See* Section II.A, *infra*.

Petitioners' analysis, thus, proceeds from a fundamental misunderstanding of what the claimed "center frequency" refers to. Petitioners do not even clearly demonstrate that either of their grounds discloses even one center frequency because they mistakenly identify the middle frequency of a portion of a baseband signal itself as the "center frequency." What is undeniable, however, is that Petitioners do not (and cannot) demonstrate that either ground discloses or renders obvious two center frequencies, one greater than the other, as required by the claims. *See* Sections II.B-C. Therefore, as discussed in detail in the following subsections, Petitioners fail to show the claimed two "center frequenc[ies]."

A. The Claimed "Center Frequency" Refers To The Carrier Signal Frequency The Baseband Signal Is Upconverted To.

The claims again require transmitting data across two frequency ranges, each with its own "center frequency," with one center frequency "greater than" the other. The '802's specification confirms that the claimed "center frequency" refers to the carrier signal frequency the baseband signal is upconverted to. Therefore, to have two, different "center frequencies," there must be two up-conversions to two carrier signals with different frequencies.

Understanding what a "center frequency" is, however, requires a brief discussion of the underlying technology. Per Professor Cooklev:

A baseband signal represents the information to be transmitted in its raw form. It can be either an analog electrical waveform (e.g., voice) or a digital signal. Baseband signals generally include frequencies that are very low and close to zero. However, antennas cannot emit zero-frequency signals and are ineffective when the frequency is low. Therefore, the frequency of many baseband signals is too low for them to be effectively or feasibly transmitted over a wireless system. As another issue, frequency ranges are typically assigned (*e.g.*, by a governmental regulatory body) such that baseband frequencies are not available for use.

Therefore, the baseband signal often cannot be transmitted wirelessly. It would instead have to be modulated on a signal at a much higher frequency prior to transmission. This higher frequency signal is called a carrier signal. In such instances, the baseband signal is said to be "up-converted" to the carrier signal's higher frequency. As I will explain later in my declaration, the "center frequency" is the carrier signal frequency to which the baseband signal is up-converted prior to transmission.

The distinction between a baseband signal and a "center frequency" (interchangeably referred to in the '802 as a carrier frequency) to which the baseband signal is up-converted is shown in the figure below. The top image shows a baseband signal with a low

frequency[1]. The middle image shows the carrier signal with a much higher "center frequency" f_c. In practice this carrier signal is generated by a local oscillator (LO). The third image shows the carrier signal after it has been amplitude modulated by the baseband signal. This modulated carrier signal is what would be transmitted out of the transmitter.

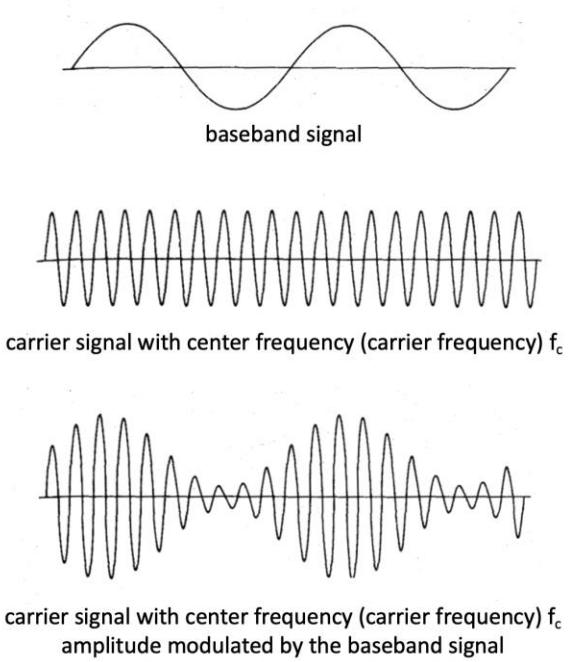

Ex. 2001 [Cooklev-Decl.] ¶¶ 39-41.

[1] For ease of illustration, the shown signal is real-valued, even though baseband signals are generally complex-valued. Ex. 2001 [Cooklev-Decl.] ¶ 41 n.1.

As Professor Cooklev explains, from the outset, the ’802 patent makes clear that a “center frequency” is the carrier signal frequency the baseband signal is upconverted to:

> The ’802 patent mentions “center frequency” more than 90 times, including in its background of the invention and in all of its embodiments. Every time it is used, it means the frequency of the carrier signal to which the baseband signal is upconverted.
>
> In the background of the invention, the ’802 patent explains that the baseband signal is “up-convert[ed]” to the frequency of the “local oscillator (LO)”. Ex. 1001 [’802] 1:25-27. The output of this up-conversion is amplified and transmitted through the antenna. *Id*., 27-30. The ’802 patent then explains that its prior art Figure 1 transmitter was “limited to up-converting a [baseband] signal to one center frequency (or modulation frequency), which is the LO frequency.” *Id*., 1:30-32. Thus, from the very outset of its disclosure, the ’802 patent uses “center frequency” as the carrier signal frequency the baseband signal upconverted to.

Ex. 2001 [Cooklev-Decl.] ¶¶ 42-43.

And, per Professor Cooklev, “center frequencies,” and more specifically, the limited use of a single center frequency (or carrier frequency) is a focal point of the background of the invention:

> In light of the background discussion in the ’802 patent, the use of two “center frequencies” as claimed is a major focus of the invention. The ’802 patent explains that in the prior art the ’802 patent sought to

> improve upon, baseband signals were upconverted to a single carrier frequency and, thus, the amount of information that could be transmitted was limited by the bandwidth around that single up-conversion frequency. Ex. 1001 ['802] 1:32-35. To maximize throughput, the prior art increased the bandwidth around the single up-conversion frequency. Ex. 1001 ['802] 1:25-32.

Ex. 2001 [Cooklev-Decl.] ¶ 44.

The '802 patent, in this regard, sought to improve upon the prior art by introducing two different center frequencies, a focal point of the claimed inventions reflected in every embodiment of the patent. Per Professor Cooklev:

> In contrast to the prior art, which sought to improve throughput by increasing bandwidth around a single center frequency, the '802 patent increases throughput in an altogether different fashion. It increases throughput by, *inter alia*, disclosing up-conversion to two, different, center frequencies (rather than just one). By utilizing two, different, center frequencies, the bandwidth can effectively be increased by aggregating the capacities of two different communication channels together.
>
> In accord with this insight, every embodiment of the '802 patent similarly uses "center frequency" to mean the carrier signal frequency the baseband signal is upconverted to. For example, Figure 2, annotated below, is illustrative:

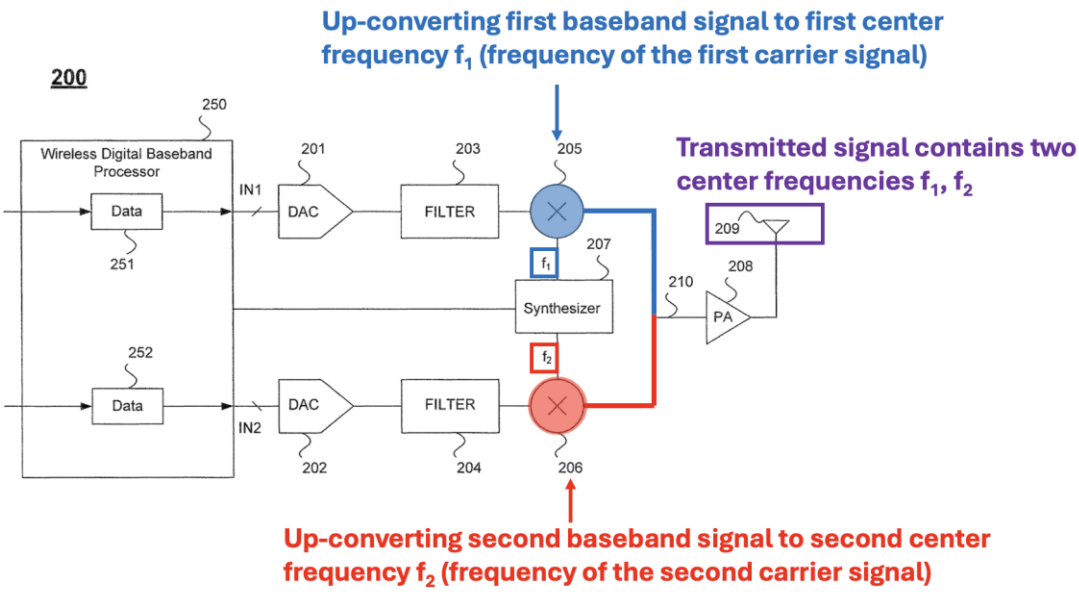

Fig. 2

Figure 2 discloses a wireless digital baseband processor 250 that provides data via two separate digital baseband signals 251 and 252. Ex. 1001 ['802] 5:60-66. After being converted to analog in DAC 201/202 and filtered, signals 251 and 252 are fed into respective up-converters 205 and 206. Up-converter 205 accordingly upconverts data 251 into a first "center frequency" f_1 and, similarly, data 252 is up-converted by element 206 into a second "center frequency" f_2. *Id.*, 6:22-56. These two up-converted signals are then combined, amplified and transmitted. *Id.*, 7:4-14. Thus, the '802 patent uses "center frequencies" f_1 and f_2 to mean the carrier signal frequencies the two baseband signals 251 and 252 are upconverted to.

The resulting signal is shown schematically in the annotated version of the '802 patent's Figure 3. The blue region shows the baseband signal upconverted to the first carrier signal with a first center

frequency f_1. The red region shows the baseband signal upconverted to the second carrier signal with a second center frequency f_2.

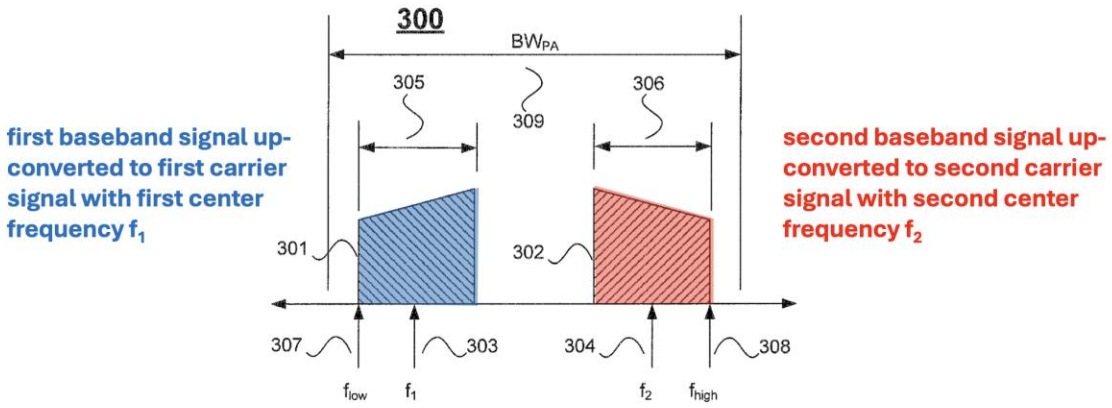

Fig. 3

> This very same meaning of "center frequency" as the carrier frequency the baseband signal is upconverted to is reflected in the '802 patent's other embodiments as well. *See, e.g.*, Ex. 1001 ['802] 9:9-57 (Figure 6 embodiment); 12:33-58 (Figure 10 embodiment).

Ex. 2001 [Cooklev-Decl.] ¶¶ 45-49.

Additionally, the '802 uses the terms "center frequency" and "carrier frequency" interchangeably, further reinforcing that "center frequency" means the carrier signal frequency the baseband signal is up-converted to.[2] For example, in connection with its Figure 8 embodiment, the '802 explains:

---

[2] As the Federal Circuit has recognized, a patent may use different terms interchangeably to mean the same thing. *See Baran v. Med. Device Techs., Inc.*, 616 F.3d 1309, 1316 (Fed. Cir. 2010) (internal citations omitted) (finding

> This example provides a transmitter for sending the same data across a communication channel at ***two different RF carrier frequencies*** to improve reliability and/or increase the range of the system. … Up-converter 812 includes a second input coupled to an output of a synthesizer 814, which may be used ***to up-convert the analog signal to a RF center frequency f_1***. Similarly, up-converter 813 includes a second input coupled to another output of a synthesizer 814 (or to a different synthesizer), which may be used to ***up-convert the analog signal to a RF center frequency f_2***. … The output of power amplifier 815 is coupled to antenna 850 to ***transmit the digital data simultaneously as an electromagnetic signal using two different RF carrier frequencies.***

Ex. 1001 [’802] 10:64-11:20. As Professor Cooklev explains:

"detachable" and "releasably" to have the same meaning); *VirnetX, Inc. v. Cisco Sys., Inc.*, 767 F.3d 1308, 1317-1319 (Fed. Cir. 2014) (reversing broad construction of "secure communication link" in part because "the specification appear[ed] to use the terms 'secure communication link' and 'VPN' interchangeably, suggesting that the inventors intended the disputed term to encompass the anonymity provided by a VPN" and no "embodiment or disclosure" "expressly divorc[ed] those terms"); *see also Haddad v. United States*, 164 Fed. Cl. 28, 66 (2023) (finding that the patent used "authenticity risk rating," "authentication rating," and "ID forgery risks rating" interchangeably).

> As can be seen, here, the '802 patent is using "center frequency" and "carrier frequency" interchangeably. Specifically, the '802 patent explains that it obtains a signal with two different "carrier frequencies" through combining signals that are separately up-converted to "center frequencies" f_1 and f_2. "Carrier frequency" is a term of art and, like "center frequency" in the '802 patent, refers to the carrier signal frequency the baseband signal is upconverted to.

Ex. 2001 [Cooklev-Decl.] ¶ 51.

Nor is there anything unusual about the '802 patent's usage of the term "center frequency." Indeed, Petitioners' own reference, IEEE 802.11n D2.0, uses "center frequency" in precisely the same way, as the carrier signal frequency to which the baseband signal is upconverted. For example, in the section addressing the "overview" of the encoding process in the standard, the last step is:

> ***Up-convert the resulting complex baseband waveform*** associated with each transmit chain to an RF signal according ***to the center frequency of the desired channel*** and transmit.

Ex. 1004 [802.11n D2.0] 237. Here, the "center frequency of the desired channel" is the carrier signal frequency to which the "complex baseband waveform" is up-converted. Ex. 2001 [Cooklev-Decl.] ¶ 57.

Similarly, the standard explains that the "actual transmitted signal" is the signal up-converted by equation 20-1, where, in that equation, f_c "is the center frequency of the carrier":

$$r_{RF}(t) = \mathrm{Re}\left\{ r(t)\exp\left(j2\pi f_c t\right)\right\}$$

where

$\mathrm{Re}\{\cdot\}$ represents the real part of a complex variable;

f_c is the center frequency of the carrier.

Ex. 1004 [802.11n D2.0] 240-241. Here, too, "center frequency of the carrier" clearly refers to the carrier frequency to which the baseband signal is up-converted. Ex. 2001 [Cooklev-Decl.] ¶ 56.

In sum, and in accord with the '802 patent's consistent usage, the Board should construe "center frequency" to mean the carrier signal frequency the baseband signal is upconverted to. *Phillips v. AWH Corp.*, 415 F.3d 1303, 1315 (Fed. Cir. 2005) ("the specification is always highly relevant to the claim construction analysis. Usually, it is dispositive; it is the single best guide to the meaning of a disputed term.") (internal quotation and citation omitted); *Medrad, Inc. v. MRI Devices Corp.*, 401 F.3d 1313, 1319 (Fed. Cir. 2005) ("We cannot look at the ordinary meaning of the term . . . in a vacuum. Rather, we must look at the ordinary meaning in the context of the written description and the prosecution history.") (citation omitted); *Kinetic Concepts, Inc. v. Blue Sky Med. Grp., Inc.*, 554 F.3d 1010, 1018-19 (Fed. Cir. 2009) (limiting "wound" to "skin wounds" where "[a]ll of the examples described in the specification involve skin wounds");

VirnetX, Inc. v. Cisco Sys., 767 F.3d 1308, 1317, 1317-1319 (Fed. Cir. 2014) (reversing construction of "secure communication link" that did not require anonymity, where "the specification appear[ed] to use the terms 'secure communication link' and 'VPN' interchangeably, suggesting that the inventors intended the disputed term to encompass the anonymity provided by a VPN" and no embodiments or disclosure "expressly divorc[ed]" the two terms); *Wisconsin Alumni Res. Found. v. Apple Inc*., 905 F.3d 1341, 1351-52 (Fed. Cir. 2018) (limiting "prediction" to dynamic prediction where all embodiments describe dynamic prediction and allowing the term to cover static prediction "would 'expand the scope of the claims far beyond anything described in the specification'"); *Choon's Design, LLC v. IdeaVillage Prods. Corp*., 776 Fed App'x 691, 695-96 (Fed. Cir. 2019) (construing "at least one pin bar" to extend only to detachable pin bars, where "the specification discloses only loom kits having detachable bases and pin bars").

In re Abbott is particularly instructive. *In re Abbott Diabetes Care Inc*., 696 F.3d 1142 (Fed. Cir. 2012). There, the Office construed "electrochemical sensor" under its plain meaning to include wired connections. *Id*., 1146. The Federal Circuit reversed, explaining:

> Even more to the point, ***every embodiment disclosed in the specification shows an electrochemical sensor without external cables or wires***. Indeed, the only mention of a sensor with external

> cables or wires in Abbott' s patents is a single statement addressing the primary deficiency of the prior art. It is true that the specification does not contain an explicit statement disclaiming electrochemical sensors with external cables or wires. …. We have held that "[e]ven when guidance is not provided in explicit definitional format, the specification may define claim terms by implication such that the meaning may be found in or ascertained by a reading of the patent documents." *Irdeto Access, Inc. v. Echostar Satellite Corp.*, 383 F.3d 1295, 1300 (Fed. Cir. 2004) (internal quotation marks omitted). ***Here, Abbott's patents "repeatedly, consistently, and exclusively" depict an electrochemical sensor without external cables or wires while simultaneously disparaging sensors with external cables or wires.*** *Id*. at 1303.

Id., 1149-1150. Similar to *In Re Abbott*, the '802 patent "repeatedly, consistently, and exclusively" uses "center frequency" is in every embodiment to mean the carrier frequency the baseband signal is upconverted to.

Petitioners, which had the burden to "set forth … how the challenged claim is to be construed" provide no analysis whatsoever of the specification or the meaning of "center frequency." 37 C.F.R. § 42.104 (b)(3); *see also Akamai Techs., Inc. v. Cable & Wireless Internet Servs., Inc*., 344 F.3d 1186, 1192 (Fed. Cir. 2003) ("[T]he first step in any invalidity analysis is claim construction..."); *Newell Window Furnishings, Inc. v. Springs Window Fashions Div., Inc.*, 15 F. App'x 836, 840 (Fed. Cir. 2001) ("To determine whether a patent claim is

anticipated or obvious, it must first be construed.") (citing *Key Pharms. v. Hercon Lab. Corp.*, 161 F.3d 709, 714 (Fed. Cir. 1998)); *Ex Parte Beck*, No. 2013-001609, 2014 WL 6737737, at *3 (PTAB Nov. 26, 2014) ("Claim construction is a necessary predicate to an obviousness determination.") (citing *Oakley, Inc. v. Sunglass Hut Int'l*, 316 F.3d 1331, 1339 (Fed. Cir. 2003)).

Instead, Petitioners merely assume without analysis that "center frequency" means the middle frequency of an alleged frequency range. But as the Board held, a petitioner may not disregard the patent's teachings on what a claim term means. *Hulu LLC v. Sound View Innovations LLC*, IPR2018-01023, Paper 15, 5 (Aug. 14, 2019) (denying request for rehearing of decision denying institution, explaining "[i]t is thus reasonable to expect a petitioner to read the contents of the specification of the challenged patent and address an express definition therein of a challenged claim term.").

As discussed in the sections that follow, under a correct construction, Petitioners fail to demonstrate that two center frequencies, one greater than the other, are disclosed or rendered obvious in either of their grounds. *See* Section II.B-C. Instead, Petitioners identify, at most, a single baseband signal that is up-converted to a single carrier signal with a single frequency (*i.e.*, a single center frequency as claimed). The art that Petitioners rely upon is, in this regard, precisely like the single center frequency prior art the '802 patent identified in the

background of the invention and improved upon. *See* Ex. 2001 [Cooklev-Decl.] ¶¶ 58-61 (discussing Ex. 1001 [’802] 1:13-40).

For the foregoing reasons, “center frequency” means the carrier signal frequency the baseband signal is up-converted to.

B. Petitioners’ First Ground Does Not Disclose Or Render Obvious Two “Center Frequenc[ies]” (Ground 1, All Claims).

Claim 1 requires transmitting across two frequency ranges with two different “center frequencies,” one greater than the other. A “center frequency,” again, should be construed to mean the carrier signal frequency the baseband signal is up-converted to. *See* Section II.A. Thus, as properly construed, claim 1 requires baseband signal(s) up-converted to two different carrier signal frequencies, one greater than the other.

In Ground 1, Petitioners rely on the 40 MHz channel disclosed in IEEE 802.11n D2.0 as disclosing two “center frequencies.” Pet., 29-36. As explained below, the IEEE 802.11n D2.0’s 40 MHz channel makes perfectly clear both in its equations and in its text that it has only ***one*** center frequency, not two. This is because the data within the channel is transmitted in one baseband signal that is upconverted to one carrier signal with one center frequency. *See* Section II.B.1.

Petitioners, however, disregard the proper construction of “center frequency.” Instead, Petitioners rely on contrived, unexplained, and unsupported figures to allege that in the 40 MHz channel of the standard, there is a small dip in

the middle of the frequency profile for the channel. Petitioners then argue that this dip creates two separate frequency ranges on each side, and the middle frequency of each frequency range is the claimed "center frequency." Petitioners' assertion about the frequency profile of the 40 MHz relies on an incorrect construction of "center frequency," and, moreover, is entirely unsupported and contrary to what the standard actually says. *See* Section II.B.2.

Consequently, Petitioners' Ground 1 fails.

1. The 40 MHz Channel Of The Standard Petitioners Rely On Discloses Only One Center Frequency, Not Two.

Petitioners rely in the alternative on two specific data formats to transmit data within the 40 MHz channel of IEEE 802.11n D2.0: the HT duplicate and non-HT duplicate data formats. Pet., 29-36. The IEEE 802.11n D2.0 is clear that the data in the 40 MHz channel for each of the HT duplicate and non-HT duplicate formats is represented by a single baseband signal that is subsequently up-converted to a single carrier signal which has a single "center frequency" (carrier frequency).

Both Petitioners and their expert admit that the entirety of the 40 MHz channel in IEEE 802.11n D2.0, including the data in the lower and upper 20 MHz portions of the channel, is a single baseband signal. Pet., 36 ("a POSA would understand that the HT duplicate and non-HT duplicate formats disclose ***both 'first information' and 'second information' within a single composite complex***

baseband signal ….”); Ex. 1003 [Negus-Decl.] ¶ 318 (similar). This is confirmed by the standard itself. As Professor Cooklev explains:[3]

> The standard discloses that the baseband signal in the 40 MHz channel for the HT duplicate format is represented by $r_{HT-DATA}^{i_{TX}}(t)$, which is a single baseband signal obtained by the standard’s equation 20-60. Ex. 1004 [802.11n D2.0] 279 (cited by Pet., 30). Similarly, the standard discloses that the baseband signal in the 40 MHz channel for the non-HT duplicate format is represented by $r_{LEG-DUP}^{i_{TX}}(t-nT_{SYM})$, which is a single baseband signal obtained by the standard’s equation 20-61. Ex. 1004 [802.11n D2.0] 280 (cited by Pet., 31). The standard is clear that those equations represent a single baseband signal. Ex. 1004 [802.11n D2.0] 240 (“The transmitted signal is described in complex base-band signal notation.”).

Ex. 2001 [Cooklev-Decl.] ¶ 54.

---

[3] Professor Cooklev has extensive personal experience working on the IEEE 802.11 standard that forms the basis of Petitioners’ grounds. For example, he was a voting member of the IEEE 802.11 working group, he chaired a study group within 802.11, and he has won an IEEE Standards Association award in 2012 for his work on the standard. Ex. 2001 [Cooklev-Decl.] ¶¶ 12-15.

The standard is also clear that the single baseband signal representing all data within its 40 MHz channel is up-converted to a single carrier signal with a single carrier (or center) frequency. As Professor Cooklev explains:

> As the standard explains, the signal actually transmitted by the transmitter is obtained by up-converting this single, complex baseband signal on a single carrier signal with a single center frequency f_c:
>
> The transmitted signal is described in complex base-band signal notation. The actual transmitted signal is related to the complex baseband signal by the following relation:
>
> $$r_{RF}(t) = \mathrm{Re}\left\{ r(t)\exp\left(j2\pi f_c t\right)\right\} \quad (20\text{-}1)$$
>
> where
>
> $\mathrm{Re}\{\cdot\}$ represents the real part of a complex variable;
>
> f_c is the center frequency of the carrier.
>
> Ex. 1004 [802.11n D2.0] 240-241.
>
> In the equation above, $r_{RF}(t)$ is the real-valued signal that is transmitted from the antenna. It is obtained by up-converting the complex baseband signal r(t) to the frequency f_c of the carrier signal. The complex baseband signal r(t) is the baseband signal obtained from either equation 20-60 for HT duplicate format, or equation 20-61 for non-HT duplicate format. As is clear from the above, regardless of which format is used, a single baseband signal is up-converted to a single carrier signal with a single center frequency.
>
> This is further confirmed by the standard's explanation of the "overview" of the encoding process, where it explains that the single

> baseband signal of the 40 MHz channel is up-converted in equation 20-1 to "***the*** center frequency of ***the*** desired carrier signal":
>
> > ***Up-convert <u>the</u> resulting complex baseband <u>waveform</u>*** associated with each transmit chain to an RF signal according to ***<u>the center frequency of the desired channel</u>*** and transmit. Refer to 20.3.7 (Mathematical description of signals) for details.
>
> Ex. 1004 [802.11n D2.0] 237. Thus, the standard makes clear that only one "center frequency" is utilized.

Ex. 2001 [Cooklev-Decl.] ¶¶ 55-58.

Thus, the 40 MHz channel relied upon by Petitioners from IEEE 802.11n D2.0 discloses one center frequency, not two. In fact, the 40 MHz channel of IEEE 802.11n D2.0 is an attempt at increasing throughput through increasing bandwidth. This is precisely the prior art method the '802 patent distinguished and sought to improve upon. Specifically, as Professor Cooklev explains:

> The old IEEE 802.11-2007 standard provided channels that were 20 MHz in bandwidth. *See* Ex. 1005 [802.11-2007] at p. 594 ("The allowed values of the DATARATE are 6, 9, 12, 18, 24, 36, 48, or 54 Mb/s for 20 MHz channel spacing"). The newer IEEE 802.11n standard relied upon by Petitioner for the disclosure of the 40 MHz channel "is the high throughput amendment to the 802.11 standard." Ex. 1006 [Perahia] 101. One of the ways IEEE 802.11n increased throughput was to increase the channel bandwidth from 20 MHz to 40 MHz. Ex. 1004 [802.11n D2.0] 292 ("When using 20 MHz channels

it uses channels defined in 17.3.8.3 (5 GHz band) or 18.4.6 (2.4 GHz band). When using 40 MHz channels, it can operate in the channels defined in 20.3.14.1 (Channel allocation in the 2.4 GHz Band) and 20.3.14.2 (Channel allocation in the 5 GHz band)."); *see also* Ex. 1006 [Perahia] 101("The other significant increase in data rate is derived from the new 40MHz channel width."); Pet., 14 ("As particularly relevant here, IEEE 802.11n D2.0 introduced 40 MHz channels ….").

But increasing channel bandwidth around a single center frequency is precisely the approach the '802 patent explained is its prior art. The '802 patent explained that in its Figure 1 prior art, the transmitters were "limited to up-converting a signal to one center frequency (or modulation frequency)." Ex. 1001 ['802] 1:29-31. Thus, the '802 patent explains, "the amount of information transmitted around the center frequency is limited by the bandwidth of the transmitter around the center frequency," which limits the amount of data that can be transmitted. Ex. 1001 ['802] 1:32-35. The '802 patent then explains that "[t]ypical prior art approaches to improving the information capacity in a wireless communication system involve maximizing the bandwidth around the center frequency to increase the amount of information that may be modulated onto the carrier frequency." Ex. 1001 ['802] 1:25-32.

Thus, the IEEE 802.11n D2.0's approach of increasing the channel bandwidth from 20 MHz to 40 MHz is precisely the prior art discussed in the '802 patent.

Ex. 2001 [Cooklev-Decl.] ¶¶ 59-61.

Thus, the 40 MHz channel of the standard Petitioners rely upon discloses, at most, only a single "center frequency," not two. It, moreover, exemplifies increased bandwidth prior art approach the '802 patent distinguished and sought to improve upon.

2. Petitioners Fail To Demonstrate That Ground 1 Discloses Or Renders Obvious Two "Center Frequenc[ies]."

Again, the IEEE 802.11n D2.0 makes perfectly clear that it utilizes only one "center frequency" in the 40 MHz channel. Disregarding the standard's actual disclosure and the correct construction of "center frequency," Petitioners argue that the frequency profile of the 40 MHz channel can be considered as having two frequency ranges because of a small dip in the middle of the frequency profile. Petitioners then assert that the middle frequency of each of these frequency ranges are the claimed first and second "center frequenc[ies]." Pet., 28-34. As discussed in the previous section, regardless of its frequency profile, the entirety of the transmitted data within the 40 MHz channel is derived from a single baseband signal that is upconverted to a single carrier signal with a single center frequency. Thus, it does not disclose two "center frequenc[ies]," much less one greater than the other, as claimed. But, as discussed below, even Petitioners' underlying assumption of the frequency profile of the 40 MHz channel is unsupported and relies on made-up figures contradicted by the express disclosures of the standard itself.

As a preliminary manner, nowhere does the IEEE 802.11n D2.0 standard refer to what Petitioners here have identified as "center frequency" in the same way as Petitioners. Rather, the standard itself uses the term "center frequency" consistent with'802's usage to mean the carrier signal frequency the baseband signal is up-converted to. *See, e.g.*, Ex. 1004 [IEEE 802.11n D2.0] 237 ("***Up-convert*** the resulting complex ***baseband waveform*** associated with each transmit chain ***to an RF signal according to the center frequency*** of the desired channel and transmit."); 241 ("f_c is the center frequency of the carrier"); 292 (defining "channel center frequency" as the carrier frequency).

To argue that the frequency profile of the signal transmitted within the 40 MHz channel of IEEE 802.111n D2.0 has two frequency ranges, the Petition first relies on the baseband signal equations for the HT duplicate format and the non-HT duplicate format of the 40 MHz channel. Pet., 30-31. Petitioners annotate each equation to supposedly show two frequency ranges with first and second center frequencies:

IEEE 802.11n D2.0 Eq. (20-60) describing HT Duplicate Format

$$r_{HT-DATA}^{i_{TX}}(t) = \frac{1}{\sqrt{N_{Duplicate}^{Tone}}} \sum_{n=0}^{N_{SYM}-1} w_{T_{SYM}}(t - nT_{SYM}) \cdot \sum_{k=-N_{SR}}^{N_{SR}} (D_{k,n} + p_{n+z}P_k)([Q_{k-32}]_{i_{TX},1} \exp(j2\pi(k - 32)\Delta_F(t - nT_{SYM} - T_{GI})) + j[Q_{k+32}]_{i_{TX},1} \exp(j2\pi(k + 32)\Delta_F(t - nT_{SYM} - T_{GI})))$$

Example disclosure of both a *"first highest frequency"* and a *"second highest frequency"*

Example disclosure of a *"first center frequency"*

Example disclosure of both a *"first lowest frequency"* and a *"second lowest frequency"*

Example disclosure of both *"first information"* and *"second information"*

Example disclosure of a *"second center frequency"* that is *"greater than the first center frequency"*

EX-1003 ¶ 279.

IEEE 802.11n D2.0 Eq. (20-61) describing Non-HT Duplicate Format

$$r_{LEG-DUP}^{i_{TX}}(t - nT_{SYM}) = \frac{1}{\sqrt{N_{Duplicate}^{Tone}}} \sum_{n=0}^{N_{SYM}-1} w_{T_{SYM}}(t - nT_{SYM}) \cdot \sum_{k=-26}^{26} (jD_{k,n} + p_nP_k)(\exp\left(j2\pi(k - 32)\Delta_F\left(t - nT_{SYM} - T_{GI} - T_{CS}^{i_{TX}}\right)\right) + j\exp\left(j2\pi(k + 32)\Delta_F\left(t - nT_{SYM} - T_{GI} - T_{CS}^{i_{TX}}\right)\right))$$

Example disclosure of both a *"first highest frequency"* and a *"second highest frequency"*

Example disclosure of a *"first center frequency"*

Example disclosure of both a *"first lowest frequency"* and a *"second lowest frequency"*

Example disclosure of both *"first information"* and *"second information"*

Example disclosure of a *"second center frequency"* that is *"greater than the first center frequency"*

Pet., 35. As a preliminary manner, the claim requires "transmitting" first and second data across first and second frequency ranges with first and second center frequencies, one greater than the other. Ex. 1001 ['802] cl. 1. The standard is clear that equations 20-60 and 20-61 are baseband signals, which are never transmitted; instead, "the actual transmitted signal" is the up-converted baseband signals, up-converted to the carrier signal with a single center frequency f_c. Ex. 1004 [802.11n D2.0] 240-241; Ex. 2001 [Cooklev-Decl.] ¶¶ 55-56. Petitioner's annotation of what is supposedly a lowest, highest, or center frequency in a baseband signal is not the frequency values of the signal that is actually transmitted, even setting aside the fact that a "center frequency" is not simply the middle frequency of a frequency range. *See* Section II.A.

Even if that could be overlooked, Petitioners' annotation of the baseband signal is completely made up and unsupported. The standard itself never identifies any part of the equation as disclosing two "lowest frequencies," two "highest frequencies," and two "center frequencies." In fact, the standard discloses that the entire signal resulting from the equation is up-converted to a carrier with a single "center frequency" f_c. Ex. 1004 [802.11n D2.0] 240-241. There is no explanation in the Petition of how and why the red and blue circled portions of these equations supposedly denote first and second center frequencies.

While the Petition cites its expert declaration, that declaration merely repeats the Petition's statements, and does not provide any substantive explanation of these annotations that roots the annotation in any disclosure in the IEEE 802.11n D2.0 standard or anything else. 37 C.F.R. § 42.65 (expert testimony that does not disclose the underlying facts or data on which the opinion is based is entitled to little or no weight."); *Xerox Corp. v. Bytemark, Inc.*, IPR2022-00624, Paper 9, 15 (August 24, 2022) (precedential) (expert testimony that "merely repeats, *verbatim*, the conclusory assertion for which it is offered to support," without any additional analysis, is entitled to little weight).[4]

[4] De. Negus's declaration contains minimal citations to the record, and with many nested citations to various parts of the declaration. To the extent any

Next, the Petition relies on the frequency spectrum mask of the old 20 MHz channel of the old IEEE 802.11-2007 standard. Pet., 31-32. Petitioners argue that because the new 40 MHz channel is formed by combining two old 20 MHz channels, a POSITA would supposedly "understand" that the old 20 MHz channel frequency spectrum mask, "when duplicated, shows what transmission in HT or non-HT duplicate format would look like." Pet., 32. The Petition then produces the following made-up figure:

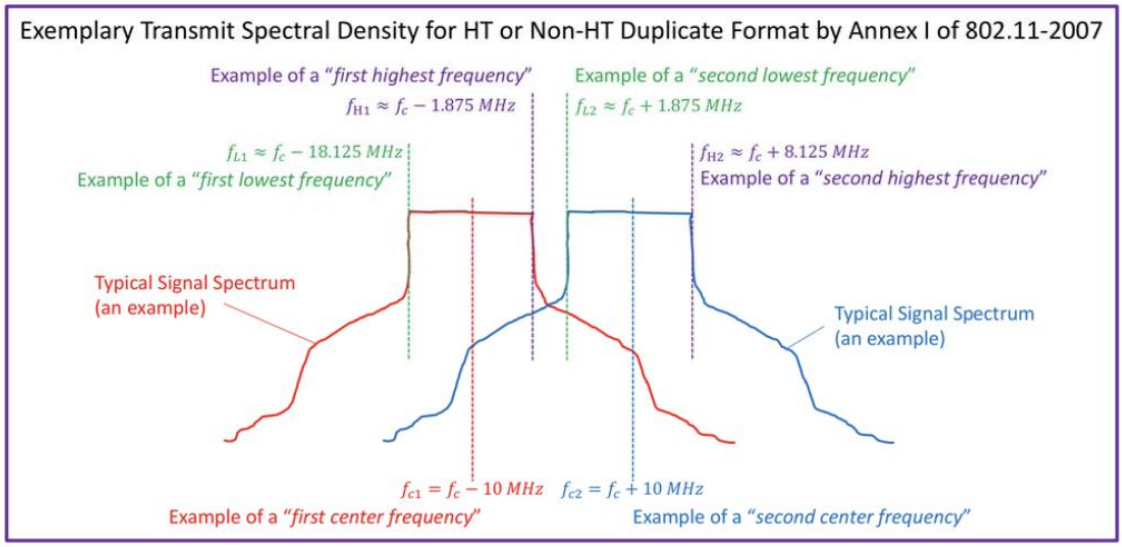

---

explanation is in fact provided in other portions of Dr. Negus's declaration, such testimony is not properly addressed in the Petition and, consequently, should be disregarded. 37 C.F.R. § 42.6 (a)(3); *Cisco Sys., Inc. v. C-Cation Techs., LLC*, IPR2014-00454, Paper 12, 9-10 (Aug. 29, 2014) (informative); *DIRECTV, LLC v. Qurio Holdings, Inc.*, IPR2015-02007, Paper 6, 13-15 (Apr. 4, 2016).

Pet., 33.

But even if the outcome of the up-converted signal transmitted within the 40 MHz may contain a "dip" in the middle, and even if that could be said to disclose two different frequency ranges, it still would not disclose two "center frequencies" as claimed. This is because, as explained, the entirety of the data within the 40 MHz channel, with or without a dip in the middle, is contained within a single baseband signal that is upconverted to a single carrier signal with a single center frequency f_c. *See* Section II.B.1.

Moreover, Petitioner's supposed frequency mask for the 40 MHz channel in its image reproduced above is unsupported and contradicted by the standard itself. In the Petition's image above, the superimposition of the blue and red frequency spectrum masks from the old 20 MHz channel, as well as the identification of first and second highest frequencies, lowest frequencies and center frequencies, is all made up. None of that appears anywhere in the standard or anywhere else. Neither Petitioners nor their expert provide any explanation whatsoever on how and why the figures are superimposed the way they are, how they arrived at the specific values for highest and lowest frequencies, or any other explanation. Pet., 33.

In fact, Petitioners' fabricated frequency mask for the 40 MHz channel is contradicted by the standard's own disclosure which shows a single frequency range without any dip in the middle:

IEEE 802.11n D2.0 depiction of spectral mask for 40 MHz channel:
Ex. 1004, 294

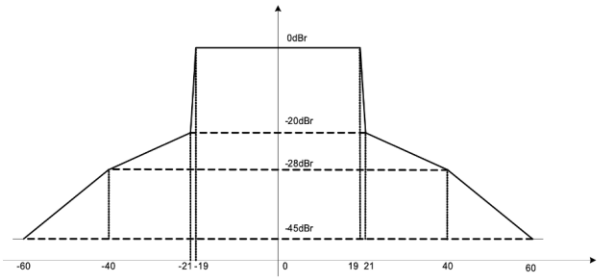

Figure n79—Transmit spectral mask for a 40 MHz channel

Petitioner's contrived depiction of spectral mask for 40 MHz channel:
Pet., 33

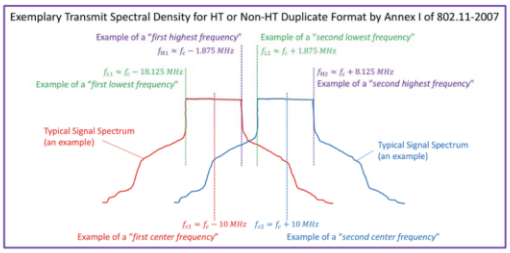

Petitioners' other exhibits confirm that the IEEE 802.11n's 40 MHz channel is a contiguous frequency channel. *See*, *e.g.*, Ex. 1006 [Perahia] 104 ("Fundamental to the design of the 40 MHz channel is that only ***adjacent*** 20 MHz channels ***are combined*** to form a 40 MHz channel.").

Petitioners next rely upon an annotated version of Figure 5.5 from Ex. 1006 [Perahia] to argue that the 40 MHz channel in IEEE 802.11n D2.0 contains two frequency ranges and two center frequencies:

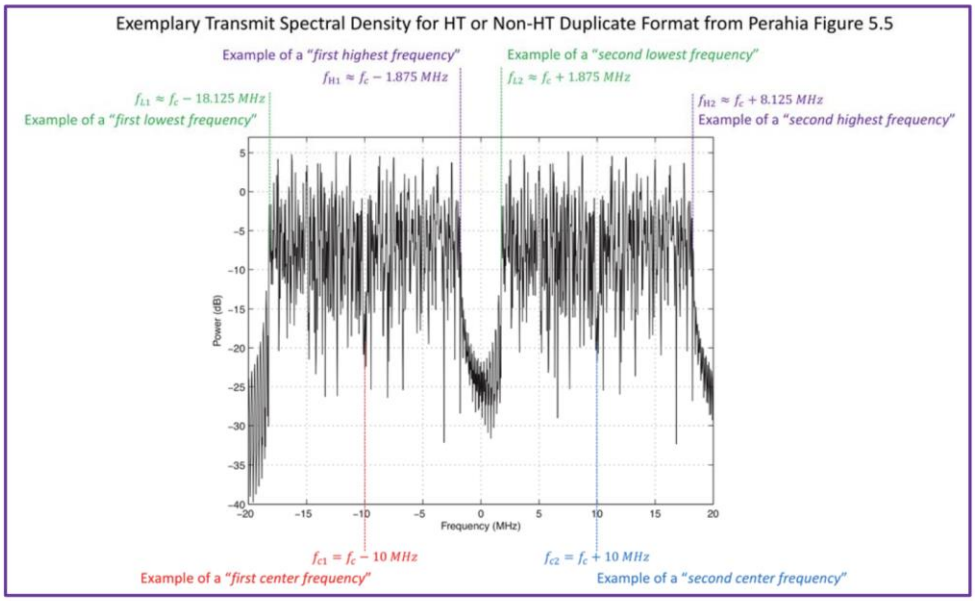

Pet., 33. Again, as explained, even if the frequency profile of the signal output within the 40 MHz channel of IEEE 802.11n D2.0 contained a "dip" in the middle, that entire signal is still up-converted to a single carrier and contains a single "center frequency." *See* Section II.B.1. Furthermore, no explanation is provided by either Petitioners or their expert about how and why the graph is annotated in this particular manner, or the source of any of the numerical values added to the figure. Furthermore, Perahia Figure 5.5 is "spectrum of the legacy portion of the 40 MHz MF ***preamble***." Ex. 1006 [Perahia] 106. It does not even represent the portion of the frame that contains actual data, but only the "preamble." *Id*.

Finally, certain portions of Petitioners' expert declaration which are either not cited at all in the Petition or are improperly incorporated by reference imply that the 40 MHz channel contains two center frequencies because it is formed by

combining two adjacent 20 MHz channels, referred to as "primary" and "secondary" portions of the 40 MHz channel. *See, e.g.*, Ex. 1003 [Negus-Decl.] ¶ 199. These improperly incorporated portions of the declaration should be disregarded. *See, e.g.*, 37 C.F.R. § 42.6 (a)(3). But even if they were to be considered, they would not help Petitioners. As Dr. Cooklev explains:

> The standard refers to the 20 MHz subparts of the 40 MHz channel as "primary" and "secondary" channels within the 40 MHz channel. Ex. 1004 [IEEE 802.11n-D2.0] at 292 ("The 40 MHz channels are specified by two fields: (Nprimary_ch, Secondary)"). This allows the standard to specify what is transmitted in different portions of the 40 MHz channel for various reasons. For example, to allow legacy devices that were designed for the old 20 MHz channel to operate with the new 40 MHz channel, the standard provides that in the non-HT duplicate format, the primary and secondary 20 MHz portions of the 40 MHz channel are duplicates of each other. Ex. 1004 [IEEE 802.11n-D2.0] at p. 301 ("And furthermore, if the FORMAT field is set to NON_HT and CH_BANDWIDTH indicates NON_HT_CBW40, follow the transmit procedure as in Clause 17 duplicated on both channels.").
>
> This logical division of the 40 MHz channel, however, does not change the fact that, as I discussed above, the entire signal of the 40 MHz channel, containing both the 20 MHz primary and secondary portions within it, is a single baseband signal that is up-converted to a single center frequency. *See* ¶¶ 54-57, *supra*. I understand that Dr. Negus also agrees with me on this point. Ex. 1003 [Negus-Decl.]

> ¶318 ("a POSITA would understand that the 'first information' and the 'second information' are disclosed by either of the '*HT duplicate format*' and '*non-HT duplicate format*' as being ***within a single composite complex baseband signal*** ….").
>
> Therefore, this is not a case where the two 20 MHz primary and secondary portions of the 40 MHz channel are separately up-converted to a different carrier signal with a different center frequency. Instead, as explained (*see* ¶¶ 54-57, *supra*), the standard is clear that the data within the 40 MHz channel is contained within a single baseband signal up-converted to a single frequency. Ex. 1004 [802.11n D2.0] 240-241, 237.

Ex. 2001 [Cooklev-Decl.] ¶¶ 62-64.

For the foregoing reasons, Petitioners fail to show that its Ground 1 discloses or renders obvious two "center frequencies" as claimed.

C. Petitioners' Second Ground Does Not Disclose Or Render Obvious Two Center Frequencies (Ground 2, All Claims).

Petitioners' Ground 2 relies on Shearer alone. Pet., 22. Petitioners' second ground shares the same infirmities as its first. Indeed, as Petitioners admits, "Shearer teaches its methods with specific relations to the IEEE 802.11 standard" that formed the basis of Petitioners' Ground 1. Pet., 55 (*citing* Ex. 1007 [Shearer] [0035]). Similar to Ground 1, Petitioners rely on Shearer's disclosure of a 40 MHz channel formed by combining two 20 MHz channels in IEEE 802.11. Pet., 57-61. Just as with Ground 1, Petitioners fail to show that Shearer discloses or renders

obvious two center frequencies. Instead, it is undisputed that Shearer's 40 MHz channel is formed by upconverting the baseband signal to a single carrier signal with a single center (carrier) frequency.

As Professor Cooklev explains:

> Shearer explains that the "legacy" IEEE 802.11a/g systems utilized 20 MHz channels. Ex. 1007 [Shearer] [0044]. Shearer then discloses a method to create a 40 MHz channel. *Id*., [0047]. Shearer creates this new 40 MHz channel by aggregating two legacy 20 MHz channels. *Id*. Shearer Figure 7 shows three ways of combining the legacy 20 MHz channels. *Id*. All three ways shown in Figure 7 are materially the same for the purposes of this discussion as they only differ in which subcarriers are set to zero as guard subcarriers within the channel. *Id*.
>
> As I will explain below, Shearer obtains the new 40 MHz channel by first creating the baseband signals for each of the legacy 20 MHz channels, then aggregating the two baseband signals to create a single baseband signal for the new 40 MHz channel, and then upconverting the single baseband signal to a single carrier signal with a single center frequency. Thus, Shearer's 40 MHz channel does not disclose two center frequencies because its transmitted signal does not contain two carriers with two different frequencies.

Ex. 2001 [Cooklev-Decl.] ¶¶ 67-68.

It is undisputed that the signal of Shearer's 40 MHz channel is created by aggregating two baseband signals into a single baseband signal and then

upconverting the baseband signal to a single center frequency. This is confirmed in the superimposition of Shearer's Figures 3 and 13 created by Petitioners' own expert, reproduced below:

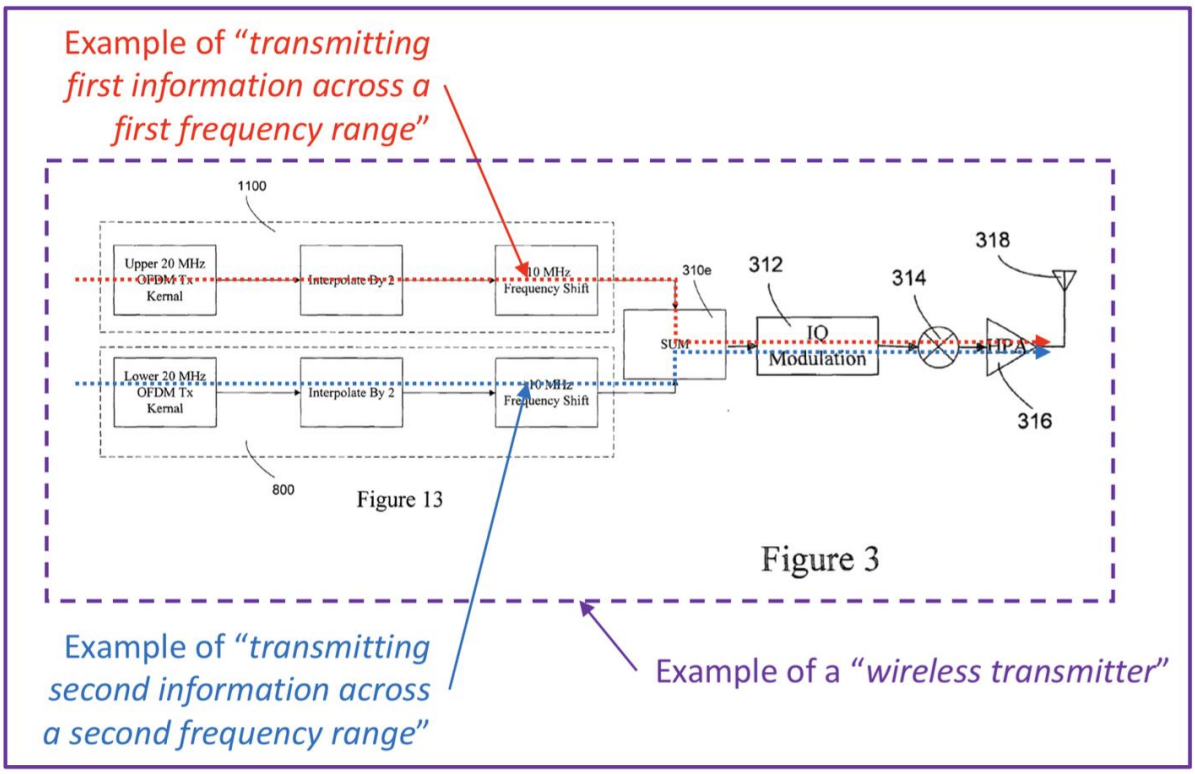

Ex. 1003 [Negus-Decl.] ¶ 428. As shown in this figure, the "upper 20 MHz" baseband signal (red) is created in box 1100. The "lower 20 MHz" baseband signal (blue) is created in box 800. The two baseband signals are aggregated in element 310e to create a 40 MHz baseband signal. This 40 MHz baseband signal is then upconverted in the single upconverter 314, before it is amplified and transmitted. Thus, as the figure created by Petitioners' own expert confirms, Shearer's 40 MHz channel performs a single up-conversion to a single carrier with

a single center frequency—it does not contain two center frequencies as claimed. This is, of course, in contrast to the ’802 patent’s embodiments that show two up-conversions, each one to a different carrier signal with a different center frequency, as shown, for example, in its Figure 2 (annotations added):

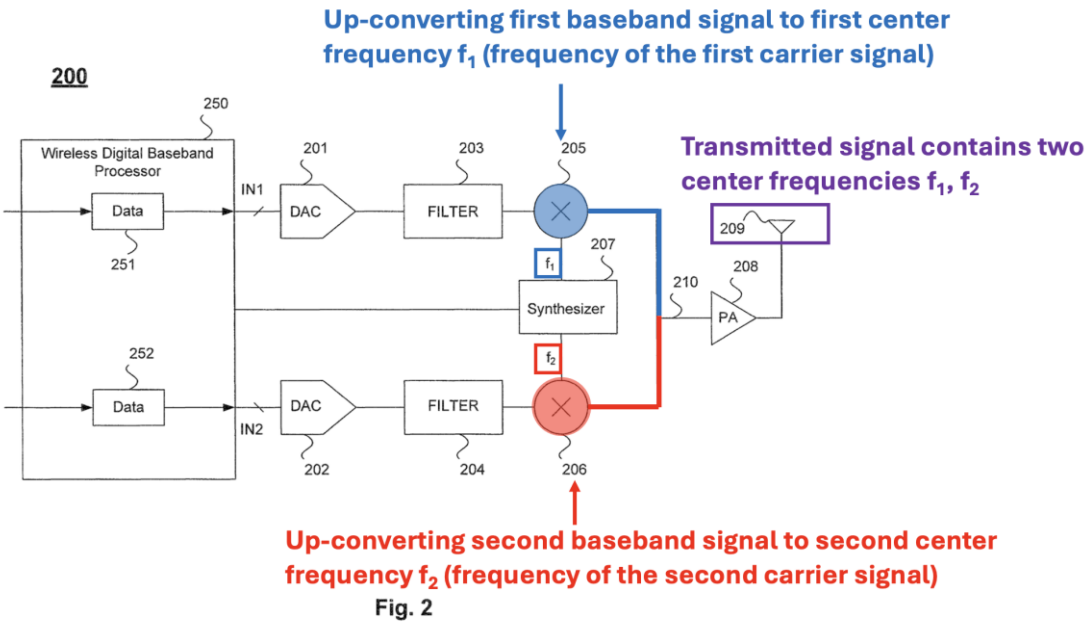

Fig. 2

As Professor Cooklev explains, Petitioners are correct that Shearer’s 40 MHz channel performs a single up-conversion to a single carrier with a single center frequency:

> Shearer’s Figure 3, reproduced below, discloses a legacy transmitter for transmitting a 20 MHz baseband signal. Ex. 1007 [Shearer] [0040].

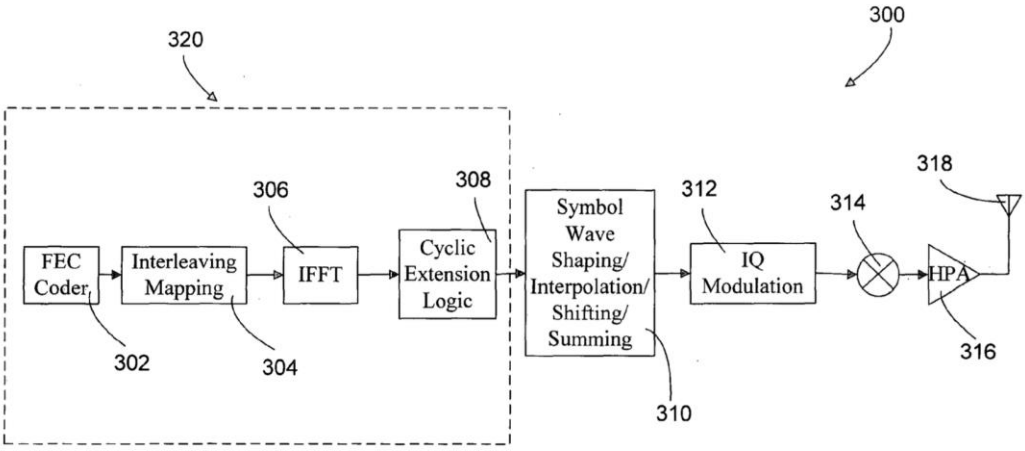

Figure 3

Once the baseband signal is created, it is "sent to mixer 314 where it is upconverted to ***the*** desired transmit frequency." Ex. 1007 [0043]. Thus, Shearer's Figure 3 discloses a single "center frequency."

To create the 40 MHz signal, Shearer duplicates element 320 to create two 20 MHz baseband signals, which are then combined in element 310 into a single 40 MHz baseband signal. That single 40 MHz baseband signal is then up-converted in mixer 314 to a single carrier signal with a single center frequency. Shearer's Figure 13, reproduced below, discloses the parallel components to create the baseband signals for the upper and lower portions of the 40 MHz channel. Ex. 1007 [Shearer] [0062].

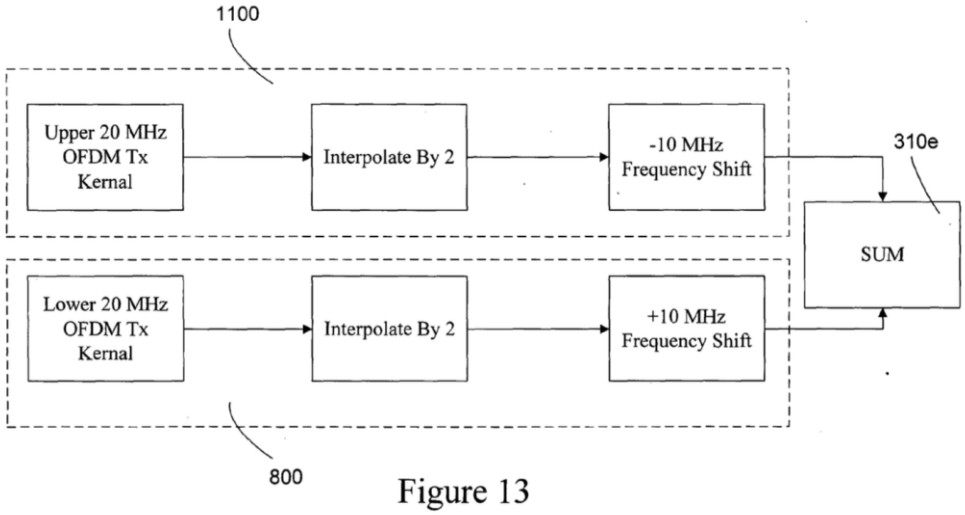

Figure 13

The baseband signal for the lower 20 MHz portion of the 40 MHz signal is created in element 1100. Ex. 1007 [Shearer] [0062]. Similarly, the baseband signal for the upper 20 MHz portion of the 40 MHz signal is created in element 800. *Id*. This is shown schematically in Shearer's Figures 10 and 12, reproduced below:

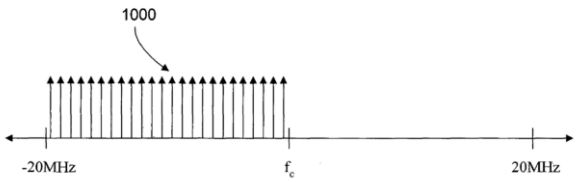

Figure 10

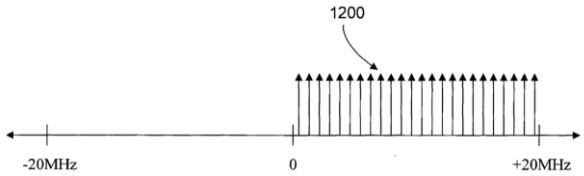

Figure 12

These two baseband signals are then "aggregated in adder 310e" to create a 40 MHz baseband signal. Ex. 1007 [Shearer] [0062]. The

aggregated 40 MHz baseband signal is shown in Figure 14, reproduced below:

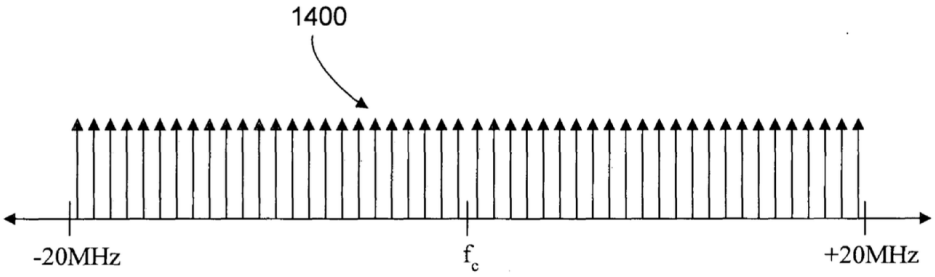

Figure 14

Note that, as Dr Negus also showed in his annotation (Ex. 1003 [Negus-Decl.] ¶ 428), a POSITA would understand that the summer 310e in Figure 13 corresponds to element 310 in Figure 3. Ex. 1007 [Shearer] [0012] ("In the figures, like reference numerals designate corresponding parts throughout the different views."); [0041] ("The symbol wave shaper/interpolator/shifter/summer 310 also comprises interpolation, shifting, and summing functionality as described below."); [0060] ("Interpolator stage 310c corresponds to shaper/interpolator/shifter/summer 310 of FIG. 3. … Frequency shift stage 310d corresponds to shaper/interpolator/shifter 310 of FIG. 3.").

Thus, as shown in Fig. 3, after the two 20 MHz baseband signals are separately produced and aggregated in element 310e, the produced 40 MHz baseband signal is upconverted by mixer 314 to a single carrier with a single center frequency.

Ex. 2001 [Cooklev-Decl.] ¶¶ 69-75.

In arguing that Shearer discloses the claimed first and second center frequencies, Petitioners again rely on an incorrect understanding of the meaning of "center frequency." Instead, as with Ground 1, Petitioners simply point to the middle frequency of two supposed frequency ranges within the 40 MHz channel:

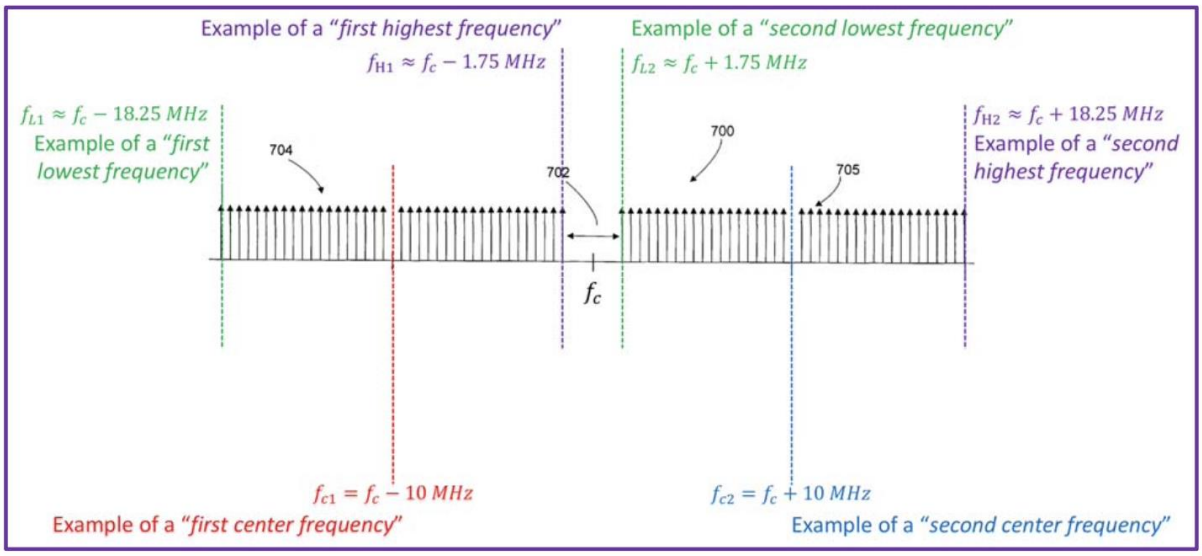

Pet., 59. But as with Ground 1, even if one were to assume that the guard bands around the DC frequency in the middle of the 40 MHz channel create two "frequency ranges" to the left and right of the guard bands, this does not disclose two different center frequencies as claimed. The entirety of the signal shown above is still a single baseband signal that is upconverted by a single mixer 314 to a single carrier with a single center frequency. Ex. 1007 [Shearer] [0043] ("The output of the modulator 312 is sent to mixer 314 where it is upconverted to the desired transmit frequency.").

For the foregoing reasons, Petitioners fail to show that its Ground 2 discloses or renders obvious the claims.

III. THE PETITION SHOULD BE DENIED UNDER *FINTIV*.

As shown above, Petitioners fails to meet the minimum threshold for institution as it fails to show a reasonable likelihood of prevailing on the merits as to any challenged claims. The Board, however, does not even need to reach that question because the Board should exercise its discretion to deny institution under *Fintiv*. *See Apple Inc. v. Fintiv, Inc.*, IPR2020-00019, Paper 11 (Mar. 20, 2020) (precedential) ("*Fintiv* Order"); *NHK Spring Co. v. Intri-Plex Technologies, Inc.*, IPR2018-00752, Paper 8, 19–20 (Sept. 12, 2018) (precedential).

Under *Fintiv*, the Board considers six factors, all of which support denial of institution:

- Factor 1: No stay of the parallel district court litigation has or is likely to be granted.
- Factor 2: The district court trial will occur months before the final written decision deadline.
- Factor 3: substantial work will be completed before any institution decision.
- Factor 4: There is substantial overlap in both the claims and art at issue in this proceeding and the district court case, and Petitioners

only offer a Sand Revolution stipulation that is especially meaningless in light of all the other cumulative IEEE 802.11 references they rely upon in the district court.

- Factor 5: Petitioners are the defendants in the parallel litigation.
- Factor 6: The Petition fails to present a compelling challenge on the merits.

Each of these factors is addressed in more detail below.

A. *Fintiv* Factor 1: The District Court Has Not Granted A Stay, Nor Is There Any Evidence That A Stay Will Be Granted.

Under the first *Fintiv* factor, the Board considers "whether the court granted a stay or evidence exists that one may be granted if a proceeding is instituted." *Fintiv* Order at 6. Here, Petitioners filed a motion to stay in the district court just two days before the filing of this preliminary response. *See* Ex. 2004 [Docket] (Dkt. # 52). This motion has not been granted as of the date of this filing, and there is no evidence that it would be granted. Notably, this factor does not require the Board to speculate as to whether a stay may be granted, but only if "evidence exists" that a stay may be granted. *Fintiv* Order at 6. No such evidence exists here. Therefore, this factor conclusively weighs against institution.

In fact, prior decisions by the presiding judge in the district court litigation, Judge Gilstrap, suggest that Petitioners' delayed motion to stay is unlikely to be granted. For example, in *MyPort, Inc. v. Samsung Electronics Co., Ltd.*, No. 2:22-

cv-00114, Dkt. No. 73 (E.D. Tex. Jun. 13, 2023), the PTAB had instituted trial on all asserted claims in all three of the patents in suit. Ex. 2007 [Stay-Denial-Order] 1-2. Yet, Judge Gilstrap denied defendant's motion to stay. *Id*., 1. Judge Gilstrap observed that a stay would substantially delay the case since "the PTAB decision is not due until over two months after jury trial is set to begin." *Id*., 4. Judge Gilstrap similarly relied on the facts that discovery was "well under way," and "deadline to substantially complete document production" about two months after the institution of the three IPRs. *Id*., 2.

In the present case, Judge Gilstrap is even less likely to grant Petitioners' stay motion. While in *MyPort*, the PTAB final written decision was due two months after the jury trial was set to begin, it is due three months after the jury trial is set to begin here. *See* Section III.B, *infra*. Similarly, discovery is even more advanced here than in *MyPort*, and the deadline to substantially complete document production is only a few weeks after the institution deadline in this case. *See* Section III.C, *infra*.

For the foregoing reasons, there is no evidence that the district court will grant Petitioners' motion to stay.

B. *Fintiv* Factor 2: The District Court Trial Will Occur Months Before The Deadline For A Final Written Decision In This Proceeding.

"If the court's trial date is earlier than the projected statutory deadline, the Board generally has weighed this fact in favor of exercising authority to deny institution under *NHK*." *Fintiv* Order, 9. Here, Factor 2 weighs against institution as the district court case has a trial date three months earlier than the projected statutory deadline for the FWD here.

The deadline for a final written decision in this IPR is September 27, 2025. The trial date is set for June 23, 2025, three months before the FWD deadline here. *See* Ex. 1010 [Docket-Control-Order] 1; Pet., 72.

Moreover, the trial date is consistent with the Federal Court Management Statistics for the Eastern District of Texas. *See* Interim Procedure for Discretionary Denials in AIA Post-Grant Proceedings With Parallel District Court Litigation (the "Interim *Fintiv* Guidance")[5] at 3 & n.4 (encouraging use of these statistics in evaluating this factor). Those statistics indicate that the average time to trial for the Eastern District of Texas for the 12-month period ending December

[5] The Interim *Fintiv* Guidance is available at https://www.uspto.gov/ sit es/default/files/documents/interim_proc_discretionary_denials_aia__parallel_dist rict_court_litigation_memo_20220621_.pdf.

31, 2023, is listed as 21.4 months. Ex. 2003 [Trial-Statistics] 1. The trial case in this case is set for approximately 21 months after the filing of the complaint, which is directly in line with the 21.4 month statistics for the district. Ex. 2004 [Docket] 2 (indicating the complaint was filed on September 29, 2023); Ex. 1010 [Docket-Control-Order] 1 (indicating the trial is scheduled for June 23, 2025).

Indeed, the Board has denied institution on account of even smaller gaps between the final written decision and trial. *See, e.g.*, *EClinicalWorks, LLC v. Decapolis LLC*, IPR2022-00229, Paper 10, 9 (Apr. 13, 2022) ("*EclinicalWorks*") (finding this factor weighed in favor of discretionary denial and denying institution where "the beginning of the jury trial in the WDTX Cases is roughly ***one or two months*** before any final decision would have been due had *inter partes* review been instituted") (emphasis added); *Fintiv* Order, 13 (finding this factor weighed in favor of discretionary denial and denying institution where the district court trial was scheduled to occur ***two months*** before the deadline for the Board to reach a final written decision); *NXP USA, Inc. v. Impinj, Inc.*, PGR2022-00005, Paper 17, 9 (May 2, 2022) ("*NXP*") (same), *reh'g denied*, Paper 20 (Aug. 25, 2022).

The Petition presents no evidence that the trial will not proceed on the set date, which, as noted above, is consistent with the most current time-to-trial statistics for the Eastern District of Texas. *Nine Energy Serv. Inc. v. NCS Multistage Inc.*, IPR2020-01615, Paper 18, 9 (Mar. 24, 2011) ("We generally take

courts' trial schedules at face value absent some strong evidence to the contrary.") (quoting *Fintiv* Order, 13).

Factor 2, therefore, weighs against institution.

C. *Fintiv* Factor 3: Extensive Investment In The Parallel District Court Litigation.

Under the third *Fintiv* factor, the Board consider the "investment in the parallel proceeding by the court and the parties." *Fintiv* Order at 6. This factor weighs against institution.

Substantial resources have already been expended in the district court and fact discovery will be entirely completed shortly after the institution deadline. The parties have exchanged infringement and invalidity contentions. Ex. 1010 [Docket-Control-Order] 5. Document production will be "substantially complete[d]" on October 15, 2024, shortly after the institution deadline. Ex. 1010 [Docket-Control-Order] 4. In accord, substantial fact discovery will be completed by the time of institution. In fact, even as of the date of this filing, Petitioners and Patent Owner have collectively produced more than 300,000 pages of documents, and have propounded more than 30 interrogatories, all of which have been responded to.

The same is true for expert work and claim construction. Claim construction discovery must be completed by September 6, 2024, which is before the institution deadline here. Ex. 1010 [Docket-Control-Order] 5. Claim construction terms will

have been identified and proposed claim terms will have been exchanged by the parties. *Id*. Opening claim construction briefs will also have been served before the institution deadline. *Id*., 4. Claim construction briefing will be complete shortly after the institution decision deadline. *Id*., 3-4.

Thus, substantial resources have already been spent in the parallel district and both fact discovery and claim construction briefing will have concluded shortly after the institution deadline. Thus, this factor weighs against institution.

D. *Fintiv* Factor 4: There Is Substantial Overlap Between This IPR And The District Court Proceeding.

This factor looks at "whether all or some of the claims challenged in the petition are also at issue in district court" and whether the "petition includes the same or substantially the same claims, grounds, arguments, and evidence" as the parallel district court case. *Fintiv* Order, 12-13. Here, Factor 4 weighs against institution the same claims are challenged under the same grounds both here and in the district court.

The Petition challenges all of the claims that are asserted in litigation. *Compare* Pet., 22 (challenging claims 1-9) *with* Ex. 1011 [Infringement-Contentions] 1 (identifying asserted claims 1-4, 7-9); *see also Vector Flow, Inc. v. HID Global Corp.*, IPR2023-00353, Paper 8, 22 (Jul. 17, 2023) (denying institution in part because the same claims were challenged at the PTAB and asserted in litigation); *EClinicalWorks*, 12 (same). The Petition argues that this

factor weighs against institution because "this Petition challenges more claims than are being asserted." Pet., 73. Yet, Petitioners only challenge two additional dependent claims 5-6, depending from the independent claim 1 already challenged here. Furthermore, these additional two dependent claims are challenged in the IPR only based on the IEEE 802.11 references (Ground 1), which is already also asserted by Petitioners in the district court. Ex. 2005 [Invalidity-Contentions] 6 (identifying IEEE 802.11n D2.0). Thus, the marginal difference of challenging two additional dependent claims in the IPR based on the same reference already asserted in the district court does not change the balance of this factor. *Next Caller, Inc. v. TRUSTID, Inc.*, IPR2019-00961, Paper 10, 14 (Oct. 16, 2019) (denying institution even though district court involves only a subset of claims because the claims all are directed to the same subject matter and petitioner does not argue that the non-overlapping claims differ significantly in some way or argue that it would be harmed if institution of the non-overlapping claims is denied).

Similarly, the Petition relies on the same references in the IPR as it does in the district court. Petitioners' first ground is based on IEEE 802.11n D2.0. Pet., 22.[6] Similarly, in the district court, Petitioners rely on IEEE 802.11n D2.0. *See*

[6] Petitioners' first ground also names in the combination the underlying standard IEEE 802.11-2007. Pet., 22. However, as the Petition states, IEEE

Ex. 2005 [Invalidity-Contentions] 6. Petitioners' second ground in the IPR is based on U.S. Application Publication No. 2006/0018249 (Shearer). Pet., 22; Ex. 1007. Similarly, in the district court, Petitioners rely on the Shearer patent that issued from that same application, with the same disclosure. Ex. 2005 [Invalidity-Contentions] 5 (identifying U.S. Pat. 7,742,388); Ex. 2006 [Shearer-Patent] 1 (U.S. Pat. 7,742,388 identifying its prior patent application publication as U.S. 2006/0018249). There is, thus, perfect overlap in the prior art presented to the PTAB and the district court.

Further, Petitioners' limited *Sand Revolution* stipulation that, "if the IPR is instituted, it will not pursue, in District Court, the same invalidity grounds for the claims challenged here" (Pet., 73) does not alleviate inefficiency concerns because Petitioners have raised at least seven other references in the district court based on the same IEEE 802.11n standard here. That they may not use the two specific IEEE 802.11n references raised in this IPR is of no consequence in avoiding duplication. Specifically, both of Petitioners' grounds in the IPR are based on IEEE 802.11n. Pet., 13 (explaining that IEEE 802.11n D2.0 is a published draft

---

802.11n D2.0 is just an amendment to IEEE 802.11-2007. Therefore, Petitioners' reliance on IEEE 802.11n in the district court also effectively is a reliance on the underlying IEEE 802.11-2007.

for amendment IEEE 802.11n); 20 (explaining that "Shearer is specifically directed to systems implemented according to at least one of several embodiments compliant with the 802.11n proposal) (internal citations omitted). Petitioners in the district court have raised a host of cumulative art all relating to the 802.11n amendment. *See, e.g.*, Ex. 2005 [Invalidity-Contentions] 6 (identifying "802.11n: The New Wave in WLAN Technology" and "The 802.11n MIMO-OFDM Standard for Wireless LAN and Beyond."); 7 (identifying "IEEE 802.11 n: enhancements for higher throughput in wireless LANs" and "802.11n Principles Demystified" and "802.11n: the new wave in WLAN technology" and "Physical layer analysis of emerging IEEE 802.11n WLAN standard" and "Next Generation Wireless LANs: Throughput, Robustness, and Reliability in 802.11n").

The Board routinely denies petitions that offer only a *Sand Revolution* stipulation. *See, e.g.*, *3Shape Trios A/S v. Densys Ltd.*, IPR2021-00236, Paper 12, 11-12 (May 20, 2021) (*Sand Revolution* stipulation "is too narrow to clarify that it will not pursue any ground that could have reasonably been raised in an IPR," and "a broader stipulation might better address concerns regarding duplicative efforts and potentially conflicting decisions"). With this *Sand Revolution* stipulation, Petitioners are agreeing to far less than what even would be the natural consequences of the case proceeding to a final written decision. *See, e.g.*, *Cal. Inst. of Tech. v. Broadcom Ltd.*, 25 F.4th 976, 991 (Fed. Cir. 2022) ("overrul[ing]

Shaw and clarify[ing] that estoppel applies not just to claims and grounds asserted in the petition and instituted for consideration by the Board, but to all grounds not stated in the petition but which reasonably could have been asserted against the claims included in the petition.”).

In short, the Petition challenges all the claims asserted in the parallel litigation, and uses the same art as relied upon in the district court. This raises substantial “concerns of inefficiency and the possibility of conflicting decisions,” and weighs against institution. *See Fintiv* Order, 12.

E. *Fintiv* Factor 5: Petitioners Are The Defendants In The District Court Litigation.

Both Petitioners here are defendants in the district court litigation. *See, e.g.*, Ex. 2005 [Invalidity-Contentions] 1 (identifying both Cisco and HP petitioners). “Because the petitioner and the defendant in the parallel proceeding are the same party, this factor weighs in favor of discretionary denial.” *Fintiv* Order, 15.

F. *Fintiv* Factor 6: Other Circumstances, Including The Merits, Weigh Against Institution.

This factor looks at “other circumstances that impact the Board’s exercise of discretion, including the merits.” *Fintiv* Order, 9. It weighs against institution here.

The Interim *Fintiv* Guidance provides that “compelling, meritorious challenges will be allowed to proceed at the PTAB even where district court

litigation is proceeding in parallel." Interim *Fintiv* Guidance, 4. "Compelling, meritorious challenges are those in which the evidence, if unrebutted in trial, would plainly lead to a conclusion that one or more claims are unpatentable by a preponderance of the evidence." *Id*.

As the Director has made clear, "the compelling merits standard is a higher standard" than the reasonable likelihood of prevailing standard required for institution. *CommScope Techs. LLC v. Dali Wireless, Inc.*, IPR2022-01242, Paper 23, 3 (Feb. 27, 2023) (precedential); *see also id*., 5 ("Merely pointing to its analysis under the lower institution standard is insufficient to demonstrate that the Petition presents a compelling unpatentability challenge."). Thus, the Director has held that, instead of the "reasonable likelihood of prevailing" threshold required for institution absent *Fintiv*, a "compelling merits" requires that "it is ***highly likely*** that the petitioner would prevail with respect to at least one challenged claim." *OpenSky Indus., LLC v. VLSI Tech. LLC*, IPR2021-01064, Paper 102, 49 (Oct. 4, 2022) (precedential).

Here, Petitioners have failed to show that it is "highly likely" that it would prevail on the merits; to the contrary, even if Petitioners' evidence were unrebutted, it would not "plainly" lead to a conclusion of unpatentability. This is because the entirety of Petitioners' analysis is based on an incorrect construction of "center frequency." The '802 patent is clear that "center frequency" is the carrier

signal frequency that the baseband signal is upconverted to. *See* Section II.A. Thus, the claims' requirement of a first and a second "center frequency," one greater than the other, requires two up-conversions to two different carrier signals with different center frequencies. As discussed in sections II.B-C, it is undisputed that the 40 MHz channels relied upon by Petitioners consist of only a single baseband signal that is upconverted to a single carrier signal with a single carrier frequency. Thus, it is undisputed that Petitioners' grounds do not disclose two "center frequenc[ies]," one greater than the other, as properly construed.

For the foregoing reasons, the lack of "compelling" merits supports denial of institution.

* * *

Each of the six *Fintiv* factors weigh in favor of the Board exercising its discretion to deny institution.

IV. CONCLUSION

For the foregoing reasons, the Petition should be denied.

Respectfully submitted,

____/ Kenneth J. Weatherwax /_____

Kenneth J. Weatherwax, Reg. No. 54,528
Nathan Lowenstein, *pro hac vice* motion to be filed
Parham Hendifar, Reg. No. 71,470
LOWENSTEIN & WEATHERWAX LLP

Date: June 27, 2024

CERTIFICATE OF COMPLIANCE WITH TYPE-VOLUME LIMITS

This Patent Owner Preliminary Response (the "POPR") consists of 10,623 words, excluding table of contents, table of authorities, certificate of service, this certificate, or table of exhibits. The POR complies with the type-volume limitation of 14,000 words as mandated in 37 C.F.R. § 42.24. In preparing this certificate, counsel has relied on the word count of the word-processing system used to prepare the paper (Microsoft Word).

Respectfully submitted,

/ Parham Hendifar /

Date: June 27, 2024

CERTIFICATE OF SERVICE

The undersigned hereby certifies that the following documents were served by electronic service, by consent between the parties (Pet. at 77), on the date signed below:

PATENT OWNER'S PRELIMINARY RESPONSE

EXHIBITS 2001-2007

The names and address of the parties being served are as follows:

PCMuldoon@duanemorris.com (Patrick Muldoon)
PDMcPherson@duanemorris.com (Patrick D. McPherson)

Respectfully submitted,

/ Robert Pistone /

Date: June 27, 2024