Trials@uspto.gov
571-272-7822

Paper 17
Date: September 24, 2024

UNITED STATES PATENT AND TRADEMARK OFFICE

BEFORE THE PATENT TRIAL AND APPEAL BOARD

HEWLETT PACKARD ENTERPRISE COMPANY and
CISCO SYSTEMS, INC.,
Petitioner,

v.

COBBLESTONE WIRELESS, LLC,
Patent Owner.

IPR2024-00707
Patent 7,924,802 B2

Before KARL D. EASTHOM, NORMAN H. BEAMER, and
RUSSELL E. CASS, *Administrative Patent Judges.*

CASS, *Administrative Patent Judge*.

DECISION
Granting Institution of *Inter Partes* Review
35 U.S.C. § 314

I. INTRODUCTION

A. Background

Hewlett Packard Enterprise Company and Cisco Systems, Inc. ("Petitioner") filed a Petition requesting an *inter partes* review of claims 1–9 (the "challenged claims") of U.S. Patent No. 7,924,802 B2 (Ex. 1001, "the '802 patent"). Paper 3 ("Pet."). Cobblestone Wireless, LLC ("Patent Owner") filed a Preliminary Response. Paper 7 ("Prelim. Resp."). With our permission, Petitioner filed a Preliminary Reply (Paper 11, "Pet. Prelim. Reply"), and Patent Owner filed a Preliminary Sur-reply (Paper 12, "PO Prelim. Sur-reply").

We have authority to determine whether to institute an *inter partes* review, under 35 U.S.C. § 314 and 37 C.F.R. § 42.4. An *inter partes* review may not be instituted unless it is determined that "the information presented in the petition filed under section 311 and any response filed under section 313 shows that there is a reasonable likelihood that the petitioner would prevail with respect to at least 1 of the claims challenged in the petition." 35 U.S.C. § 314 (2018); *see also* 37 C.F.R § 42.4(a) (2020) ("The Board institutes the trial on behalf of the Director."). The reasonable likelihood standard is "a higher standard than mere notice pleading," but "lower than the 'preponderance' standard to prevail in a final written decision." *Hulu, LLC v. Sound View Innovations, LLC*, IPR2018-01039, Paper 29 at 13 (PTAB Dec. 20, 2019) (precedential).

For the reasons provided below and based on the record before us, we determine that Petitioner has demonstrated a reasonable likelihood that it would prevail in showing the unpatentability of at least one of the challenged claims. Accordingly, we institute an *inter partes* review on all grounds set forth in the Petition.

B. Real Parties in Interest

Petitioner states that "the real parties-in-interest" are "Hewlett Packard Enterprise Company and Cisco Systems, Inc." Pet. 75. Patent Owner identifies Cobblestone Wireless, LLC as the real party in interest. Paper 5, 2.

C. Related Proceedings

The parties identify the following proceedings between the parties involving the '802 patent: *Cobblestone Wireless, LLC v. Cisco Systems, Inc.*, No. 2:23-cv-00454 (E.D. Tex.) (the "parallel district court case"); and *Cobblestone Wireless, LLC v. Hewlett Packard Enterprise Company.*, Case No. 2:23-cv-00457 (E.D. Tex.). Pet. 75–76; Paper 5, 2–3. The parties also identify the following proceedings involving the '802 patent; *Cobblestone Wireless, LLC v. Samsung Electronics Co., Ltd.*, No. 2:23-cv-00285 (E.D. Tex.); *Cobblestone Wireless, LLC v. Cellco Partnership d/b/a Verizon Wireless*, Case No. 2:23-cv-00382 (E.D. Tex.); *Cobblestone Wireless, LLC v. T-Mobile USA, Inc.*, No. 2:23-cv-00381 (E.D. Tex.); *Cobblestone Wireless, LLC v. AT&T Services Inc.* No. 2:23-cv-00380 (E.D. Tex.); *Cobblestone Wireless, LLC v. CommScope Holding Company, Inc.*, No. 2:23-cv-00455 (E.D. Tex.); and *Samsung Elecs. Am., Inc. v. Cobblestone Wireless, LLC,* IPR2024-00606. *Id.*

D. The '802 Patent (Ex. 1001)

The '802 patent is directed to a wireless communication system and method that transmits signals simultaneously over a communication channel at different RF center frequencies. Ex. 1001, code (54), code (57). The Background of the '802 patent explains that "[c]ommunication systems generally contain one or more transmission channel to transmit data from the

transmitter to the receiver." *Id.* at 1:12–14. The Background describes a transmitter in such a system that "is limited to up-converting a signal to one center frequency (or modulation frequency), which is the LO [(local oscillator)] frequency." *Id.* at 1:29–32. "Typically," the Background explains, "the amount of information transmitted around the center frequency is limited by the bandwidth of the transmitter around the center frequency," which "limits the amount of data that can be transmitted." *Id.* at 1:32–35. Thus, "[t]ypical prior art approaches to improving the information capacity in a wireless communication system involve maximizing the bandwidth around the center frequency to increase the amount of information that may be modulated onto the carrier frequency." *Id.* at 1:35–40.

To overcome this issue, the'802 patent proposes "a method of transmitting information in a wireless communication channel" that includes "transmitting first information across a first frequency range having a first center frequency, a first highest frequency, and a first lowest frequency, and simultaneously transmitting second information across a second frequency range using the same wireless transmitter," where the second frequency range has "a second center frequency greater than the first center frequency, a second highest frequency, and a second lowest frequency." Ex. 1001, 1:60–2:5.

Figure 2 of the '802 patent, reproduced below, "illustrates a wireless communication system according to one embodiment of the present invention." Ex. 1001, 5:53–54.

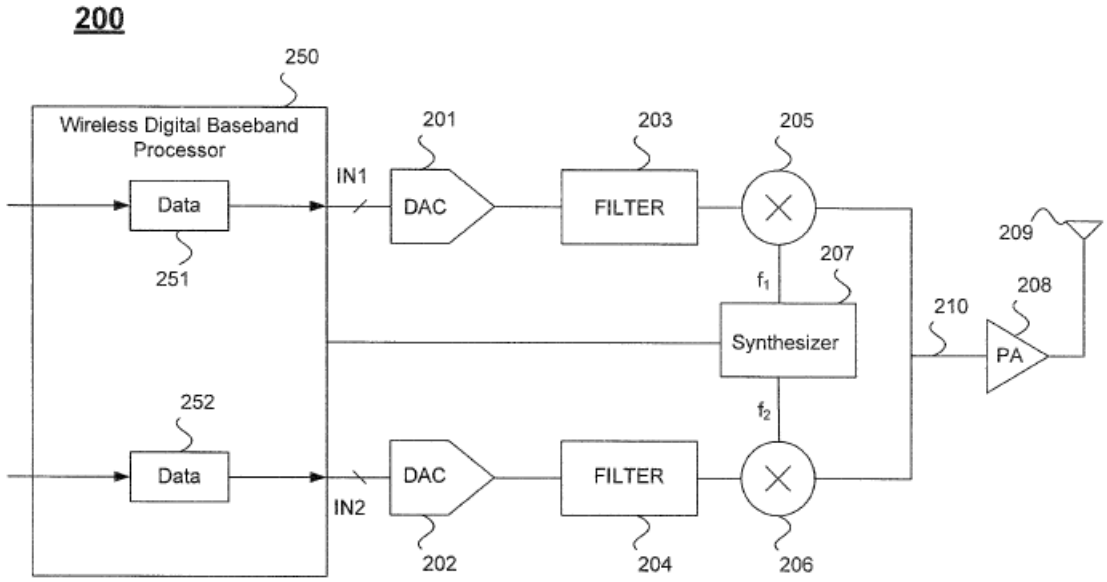

Fig. 2

Figure 2 of the ’802 patent illustrates a wireless communication system according to an embodiment of the invention. Ex. 1001, 5:53–54, Fig. 2.

As shown in Figure 2, baseband digital system 250 provides a first digital signal comprising first digital data 251 which is provided as IN1 and a second digital signal comprising second digital data 252 provided as IN2. *Id.* at 5:62–66. The first digital data 251 and second digital data 252 may be unrelated data streams or data from the same data stream. *Id.* at 6:7–9. Each of the first and second digital signals is transmitted to a digital to analog converter (DAC 201 and 202), a filter (203 and 204), and an up-converter (205 and 206). *Id.* at 6:10–26. The up-converters 205 and 206 each receive a first modulation signal having an RF center frequency (f_1 and f_2, respectively) from synthesizer 207 and generate first and second up-converted signals that are combined at the input to amplifier 208. *Id.* at 6:22–44, 6:57–60, 7:4–7. Amplifier 208 outputs an amplified up-converted

signal comprising the first and second up-converted analog signals, and transmits this signal over antenna 209. *Id.* at 7:7–11.

Figure 3 of the ’802 patent, reproduced below, illustrates an example of the frequency content of the signal transmitted from the system disclosed in Figure 2.

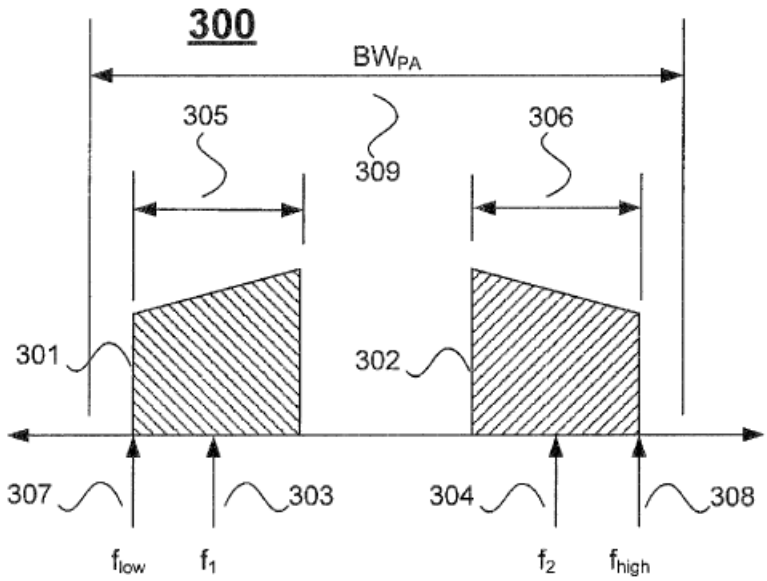

Fig. 3

Figure 3 of the ’802 patent illustrates an example of the frequency content of the signal transmitted by the system of Figure 2. Ex. 1001, 5:58–60, Fig. 3.

Figure 3 shows first up-converted analog signal 301 generated by up-converter 205, which has center frequency f_1 and frequency range 305, and second up-converted analog signal 302 generated by up-converter 206, which has center frequency f_2 and frequency range 306. Ex. 1001, 6:26–44. The frequency difference between f_1 and f_2 is greater than the sum of one-half of the first frequency range and one-half of the second frequency range, so that the up-converted signals do not overlap and cause distortion. *Id.* at 6:48–53. The first and second up-converted analog signals 301 and 302 may be transmitted by the antenna over bandwidth BW_{PA} 309. *Id.* at 7:9–14.

E. Illustrative Claims

Of the challenged claims, claim 1 is independent. Claim 1 is illustrative and is reproduced below.

> 1. [pre] A method of transmitting information in a wireless communication channel comprising:
>
> [1a] transmitting first information across a first frequency range using a wireless transmitter, the first frequency range having a first center frequency, a first highest frequency, and a first lowest frequency; and
>
> [1b] simultaneously transmitting second information across a second frequency range using the same wireless transmitter, the second frequency range having a second center frequency, a second highest frequency, and a second lowest frequency.

Ex. 1001, 13:59–14:3 (bracketed paragraph identifiers added).

F. Applied References

Petitioner relies upon the following references:

> IEEE 802.11n Draft 2.0 Draft Standard for Information Technology-Telecommunications and information exchange between systems-Local and metropolitan area networks-Specific requirements, Part 11: Wireless LAN Medium Access Control (MAC) and Physical Layer (PHY) Specifications, Feb. 2007 (Ex. 1004, "IEEE 802.11n D2.0");
>
> IEEE 802.11-2007 Standard for Information Technology-Telecommunications and information exchange between systems-Local and metropolitan area networks-Specific requirements, Part 11: Wireless LAN Medium Access Control (MAC) and Physical Layer (PHY) Specifications (Ex. 1005, "IEEE 802.111-2007); and
>
> Shearer et al., US 2006/00018249 A1, published Jan. 26, 2006 (Ex. 1007, "Shearer").

Pet. 21–22.

Petitioner submits the Declaration of Dr. Kevin Negus (Ex. 1003). Patent Owner submits the Declaration of Dr. Todor v. Cooklev (Ex. 2001).

G. Asserted Grounds of Unpatentability

Petitioner challenges the patentability of claims 1–9 of the '802 patent based on the following grounds:

Claim(s) Challenged	35 U.S.C. §	Reference(s)/Basis
1–9	103(a)[1]	IEEE 802.n D2.0, IEEE 802.11-2007
1–4, 7–9	103(a)	Shearer

Pet. 22.

II. DISCUSSION

A. Claim Construction

A claim "shall be construed using the same claim construction standard that would be used to construe the claim in a civil action under 35 U.S.C. § 282(b)." 37 C.F.R. § 42.100(b) (2020). The parties dispute the proper construction of the term "center frequency," which appears in independent claim 1. Prelim. Resp. 4–18; Pet. Prelim. Reply 1–3; PO Prelim. Sur-reply 1–4. This term will be discussed in more detail below.

1. Construction of "Center Frequency"

Patent Owner argues that the term "center frequency" refers to "the carrier signal frequency the baseband signal is upconverted to." Prelim. Resp. 4. Relying on Dr. Cooklev, Patent Owner explains that a "baseband

[1] The Leahy-Smith America Invents Act, Pub. L. No. 112-29, 125 Stat. 284 (2011) ("AIA"), included revisions to 35 U.S.C. § 103 that became effective after the filing of the application that led to the '802 patent. Therefore, we apply the pre-AIA version of 35 U.S.C. § 103.

signal represents the information to be transmitted in its raw form" and "generally include[s] frequencies that are very low and close to zero," which cannot be effectively transmitted by an antenna. *Id.* at 6. Therefore, Patent Owner asserts, the baseband signal must be modulated on a signal at a much higher frequency, called a "carrier signal," which is referred to as "up-converting" the baseband signal to the carrier signal's higher frequency. *Id.* Patent Owner submits a diagram from Dr. Cooklev, reproduced below, showing a baseband signal, a carrier signal with a much higher carrier frequency f_c, and the carrier signal modulated by the baseband signal.

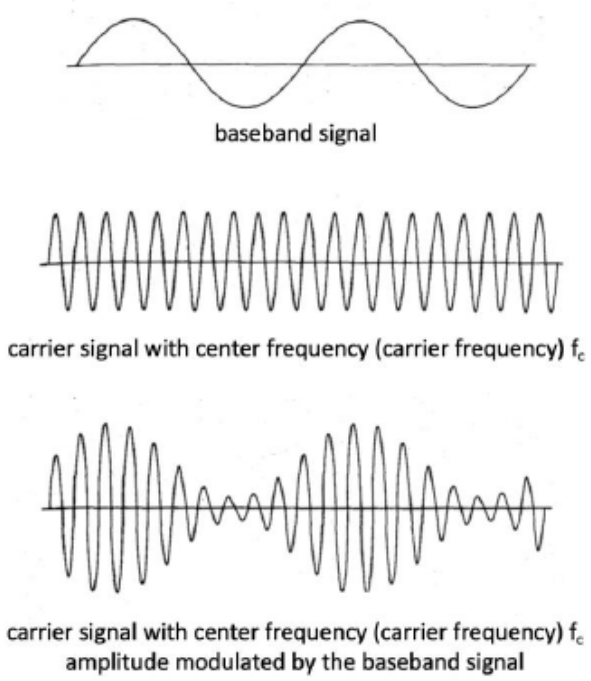

Patent Owner's figure from Dr. Cooklev showing a baseband signal (top), a carrier signal with a carrier frequency f_c (center), and the carrier frequency amplitude modulated by the baseband signal (bottom). Prelim. Resp. 7 (citing Ex. 2001 ¶¶ 39–41).

Relying on Dr. Cooklev, Patent Owner argues that the '802 patent makes clear that a "center frequency" is the carrier frequency the baseband signal is upconverted to. Prelim. Resp. 8. Patent Owner argues that the Background of the'802 patent "explains that the baseband signal is 'up-

convert[ed]' to the frequency of the 'local oscillator (LO),'" and "[t]he output of this up-conversion is amplified and transmitted through the antenna." *Id.* (citing Ex. 2001 ¶¶ 42–43 (citing Ex. 1001, 1:25–30)) (first alteration in original). According to Patent Owner and Dr. Cooklev, the Background "then explains that its prior art Figure 1 transmitter was 'limited to up-converting a [baseband] signal to one center frequency (or modulation frequency), which is the LO frequency.'" *Id.* (citing Ex. 2001 ¶¶ 42–43 (citing Ex. 1001, 1:27–30)) (alteration in original). Patent Owner also argues that the '802 patent "uses the terms 'center frequency' and 'carrier frequency' interchangeably, further reinforcing that 'center frequency' means the carrier frequency the baseband signal is up-converted to." *Id.* at 11–12 (citing Ex. 1001, 10:64–11:20; Ex. 2001 ¶ 51).

Patent Owner also argues that "the '802 patent mentions 'center frequency' more than 90 times," and "[e]very time it is used, it means the frequency of the carrier signal to which the baseband signal is upconverted." Prelim. Resp. 8 (citing Ex. 2001 ¶¶ 42–43). As examples, Patent Owner points to Figures 2 and 3, which show up-converting the first and second baseband signals to first and second center frequencies f_1 and f_2, respectively, which Patent Owner argues refer to the frequency of the first and second carrier signals. *Id.* at 9–11.

Petitioner responds by arguing that Patent Owner is trying to "impermissibly import" the "concept of up-conversion and/or up-converters" into the challenged claims, even though that concept is not present in the challenged claims. Pet. Prelim. Reply 1. Petitioner asserts that the '802 patent Specification "refers to up-converting baseband signals to center frequencies in several embodiments," but "never defines or limits the

claimed 'center frequency' in those terms" or "define[s] the invention as requiring a first and second center frequency that have been up-converted from a baseband signal." *Id.* at 2. "Instead," according to Petitioner, the '802 patent "uses permissive language ('may') throughout the specification when referring to up-conversion of a baseband signal." *Id.* Petitioner further contends that the '802 patent "discloses an embodiment in which center frequencies are shifted within the frequency bandwidth of the power amplifier, which can include post-up conversion shifting," pointing to Figure 4 and the Specification's disclosure that ". . . a new frequency content 410 in which the signal 401 has moved in frequency as illustrated by signal 411 having an RF center frequency 413. . . ." *Id.* (citing Ex. 1001, 7:29–31) (alterations in original). "In this embodiment," Petitioner argues, "the center frequency may not be the carrier signal frequency to which the baseband signal was up-converted, *i.e.*, signal 401." *Id.* Finally, Petitioner contends that "the plain and ordinary meaning of center frequency" is "a frequency at the middle of the frequency range." *Id.* at 2–3 (citing Ex. 1004 § 20.3.7; Ex. 1005 § 14.5.14.4).

Patent Owner responds that the Figure 4 embodiment does not support Petitioner's argument. PO Prelim. Sur-reply 2–3. Patent Owner argues that, in this embodiment, "the 'center frequency' changes over time," which "is done by programming synthesizer 207 to generate different center frequencies at different times, '[a]s illustrated in FIG. 2.'" *Id.* at 2 (citing Ex. 1001, 7:19–42, 7:48–55) (alteration in original). Figure 2, Patent Owner asserts, "teaches that synthesizer 207 provides the carrier frequency to which the baseband signal is upconverted." *Id.* (citing Prelim. Resp. 10). "Thus," according to Patent Owner, "the Figure 4 embodiment changes the 'center

frequency' by changing the up-conversion carrier frequency through synthesizer 207," and does not change the "center frequency" post-up-conversion, as Petitioner contends. *Id.* at 2–3. "Moreover," according to Patent Owner, "Petitioner does not contend that Figure 4 or anything else in the intrinsic record supports its construction of 'center frequency.'" *Id.* at 3 (citing Pet. Reply 1–3).

We determine that we do not need to resolve this claim construction issue for purposes of institution because, as discussed further below, even if we adopt Patent Owner's narrower construction of "center frequency," Petitioner has demonstrated a reasonable likelihood that this limitation is disclosed by the asserted prior art. Consequently, for purposes of this decision, we will apply Patent Owner's construction of "center frequency" as to "the carrier signal frequency the baseband signal is upconverted to." The parties may further address the construction of this claim term during the trial.

2. Other Terms

We determine that it is not necessary to provide an express interpretation of any other claim terms. *See Nidec Motor Corp. v. Zhongshan Broad Ocean Motor Co.*, 868 F.3d 1013, 1017 (Fed. Cir. 2017); *Vivid Techs., Inc. v. Am. Sci. & Eng'g, Inc.*, 200 F.3d 795, 803 (Fed. Cir. 1999) ("[O]nly those terms need be construed that are in controversy, and only to the extent necessary to resolve the controversy.").

B. Principles of Law

A claim is unpatentable under 35 U.S.C. § 103 if "the differences between the subject matter sought to be patented and the prior art are such that the subject matter as a whole would have been obvious at the time the

invention was made to a person having ordinary skill in the art to which said subject matter pertains." *KSR Int'l Co. v. Teleflex Inc.*, 550 U.S. 398, 406 (2007). The question of obviousness is resolved on the basis of underlying factual determinations, including (1) the scope and content of the prior art; (2) any differences between the claimed subject matter and the prior art; (3) the level of skill in the art; and (4) where in evidence, objective evidence of non-obviousness.[2] *Graham v. John Deere Co.*, 383 U.S. 1, 17–18 (1966). When evaluating a combination of teachings, we must also "determine whether there was an apparent reason to combine the known elements in the fashion claimed by the patent at issue." *KSR*, 550 U.S. at 418 (citing *In re Kahn*, 441 F.3d 977, 988 (Fed. Cir. 2006)). Whether a combination of prior art elements would have produced a predictable result weighs in the ultimate determination of obviousness. *Id.* at 416–417.

In an *inter partes* review, the petitioner must show with particularity why each challenged claim is unpatentable. *Harmonic Inc. v. Avid Tech., Inc.*, 815 F.3d 1356, 1363 (Fed. Cir. 2016); 37 C.F.R. § 42.104(b) (2020). The burden of persuasion never shifts to Patent Owner. *Dynamic Drinkware, LLC v. Nat'l Graphics, Inc.*, 800 F.3d 1375, 1378 (Fed. Cir. 2015).

We analyze the challenges presented in the Petition in accordance with the above-stated principles.

C. Level of Ordinary Skill in the Art

Petitioner contends that a person of ordinary skill in the art at the time of the alleged invention would have had "at least a Bachelor's degree in

[2] At this stage of the proceeding, Patent Owner has not presented objective evidence of non-obviousness.

Electrical Engineering or a related field and at least two years of professional experience in wireless communications." Pet. 10 (citing Ex. 1003 ¶¶ 24–25). "Alternatively," Petitioner asserts, one of ordinary skill "would have had a more advanced degree, such as a Master's degree in Electrical Engineering or an equivalent field, combined with at least one year of work experience in wireless communication." *Id.* According to Petitioner, such a person "would also have been familiar with wireless communications networks, equipment, and integrated circuit chips, and would have had a working knowledge of the design of physical layer signal processing and RF systems for wireless communication based at least upon IEEE 802 standards." *Id.* at 11 (citing Ex. 1003 ¶¶ 24–25).

Patent Owner does not offer a proposed level of ordinary skill at this stage of the proceeding. *See* Prelim. Resp.; PO Prelim. Sur-reply.

At this stage of the proceeding, we adopt Petitioner's assessment of the level of skill in the art, which is consistent with the '802 patent and the asserted prior art of record.

D. Ground 1: Obviousness of Claims 1–9 Based on IEEE 802.11n D2.0 in view of IEEE 802.11-2007

Petitioner contends that claims 1–9 would have been obvious over IEEE 802.11n D.20 in view of IEEE 802.11-2007. Pet. 22–55. Patent Owner disagrees, arguing that the proposed combination does not teach transmitting a signal with two different "center frequencies," as the claims require. Prelim. Resp. 18–33.

1. Overview of IEEE 802.11n D2.0 (Ex. 1004)

IEEE 802.11n D2.0 is an amendment to the Draft Standard for Information Technology-Telecommunications and information exchange

between systems-Local and metropolitan area networks, Part 11: Wireless LAN Medium Access Control (MAC) and Physical Layer (PHY) specifications. Ex. 1004, i. This amendment "defines modifications to both the 802.11 physical layers (PHY) and the 802.11 Medium Access Control Layer (MAC) so that modes of operation can be enabled that are capable of much higher throughputs, with a maximum throughput of at least 100MB/s, as measured at the MAC data service access point (SAP)." *Id.*, Abstract (page iv).

2. Overview of IEEE 802.11-2007 (Ex. 1005)

IEEE 802.11-2007 is the IEEE Standard for Information technology-Telecommunications and information exchange between systems-Local and metropolitan area networks, Part 11: Wireless LAN Medium Access Control (MAC) and Physical Layer (PHY) Specifications. Ex. 1005, 1. It is a revision of IEEE Standard 802.11-1999. *Id.* The document states that "[t]his revision specifies technical corrections and clarifications to IEEE [Standard] 802.11 for wireless local area networks (WLANS) as well as enhancements to the existing medium access control (MAC) and physical layer (PHY) functions." *Id.* at 4, 6. It further explains that "[t]his revision gives users, in one document, the IEEE 802.11 standard for wireless local area networks (WLANS) with all the amendments that have been published to date." *Id.* at 6.

3. Motivation to Combine IEEE 802.11n D.20 and IEEE 802.11-2007

Petitioner argues that one of ordinary skill would have been motivated to combine IEEE 802.11n D2.0 and IEEE 802.11-2007. Pet. 24. Petitioner asserts that IEEE 802.11n D2.0 defines HT and non-HT duplicate formats

and "leveraged a new 40 MHz channel that was highly desirable to a [person of ordinary skill in the art] because it would increase wireless transmission throughput for commercial devices." *Id.* at 25 (citing Ex. 1003 ¶¶ 85–119, 261–273). According to Petitioner, these "duplicate formats facilitate the precise functionality recited in the Challenged Claims: simultaneous transmission of information over separate carriers or channels." *Id.* (citing Ex. 1003 ¶¶ 261–300). Additionally, Petitioner contends, one of ordinary skill would have been motivated to combine IEEE 802.11n D2.0 with the IEEE 802.11-2007 standard because the former is an amendment to the latter, and the amendment includes numerous specific references to the standard. *Id.* at 26 (citing Ex. 1003 ¶¶ 85–89, 121–125, 195, 261–300). Petitioner further argues that there was a "strong commercial interest in designing products with 40 MHz channel bandwidth using at least the IEEE 802.11n HT duplicate or Non-HT duplicate formats," and that using these formats would have been "highly predictable" in the context of the IEEE 802.11-2007 standard." *Id.* (citing Ex. 1003 ¶¶ 261–300).

Patent Owner does not present arguments regarding the motivation to combine IEEE 802.11n D2.0 and IEEE 802.11-2007. *See generally* Prelim. Resp.; PO Prelim. Sur-reply.

We determine that, on the record before us, Petitioner's cited evidence sufficiently supports its arguments that one of ordinary skill would have been motivated to combine IEEE 802.11n D2.0 and IEEE 802.11-2007 as Petitioner proposes.

4. Analysis of Independent Claim 1

a) 1[pre]: "[a] method of transmitting information in a wireless communication channel comprising:"

Petitioner argues that, to the extent the preamble is limiting, IEEE 802.11n D2.0 discloses it. Pet. 27. Specifically, Petitioner asserts, this reference teaches "a high throughput (HT) orthogonal frequency division multiplexing (OFDM) system" that is "applicable to operation in either the 2.4 GHz band or the 5 GHz bands, or both." *Id.* According to Petitioner, "[t]he HT duplicate and non-HT duplicate formats disclosed by IEEE 802.11n D2.0 are a method of transmitting information in a wireless communication channel," because in "HT duplicate and Non-HT duplicate formats, the same data are transmitted over two adjacent 20 MHz channels" in which "the 40 MHz channel is divided into 128 sub-carriers and the data are transmitted on carriers -58 to -6 and 6 to 58." *Id.* Thus, Petitioner contends, one of ordinary skill "would understand the disclosures in IEEE 802.11n D2.0 of 'data' that is 'transmitted' as 'an RF signal' using 'orthogonal frequency division multiplexing (OFDM)' (i.e. a 'method of transmitting information') over 'two adjacent 20 MHz channels' according to the 'center frequency of the desired channel' for 'operation in either the 2.4 GHz band or the 5 GHz bands, or both' (i.e. 'in a wireless communication channel'), as constituting a 'method of transmitting information in a wireless communication channel.'" *Id.* (citing Ex. 1003 ¶¶ 248–274).

Petitioner also argues that one of ordinary skill "would understand that the IEEE 802.11-2007 standard discloses a method of transmitting information in a wireless communication channel." Pet. 28. Petitioner points to the standard's statement that it "define[s] one medium access

control (MAC) and several physical layer (PHY) specifications for ***wireless connectivity*** for fixed, portable, and moving stations (STAs) within a local area." *Id.* According to Petitioner, "IEEE 802.11-2007 'specifies the PHY entity for an orthogonal frequency division multiplexing (OFDM) system' which 'uses 52 subcarriers that are modulated' with 'data, pilots, or training symbols' specifically for the '5 GHz band.'" *Id.* One of ordinary skill, Petitioner contends, "would understand that these disclosures (among others) of transmitting data using OFDM teach a method of transmitting information in a wireless communication channel." *Id.* (citing Ex. 1003 ¶¶ 248–274).

Patent Owner does not present arguments regarding the preamble. *See generally* Prelim. Resp.

We determine that, on the record before us, Petitioner's cited evidence sufficiently supports its contentions regarding the preamble.[3]

> *b) [1a]: "transmitting first information across a first frequency range using a wireless transmitter, the first frequency range having a first center frequency, a first highest frequency, and a first lowest frequency"; and*
>
> *[1b]: "simultaneously transmitting second information across a second frequency range using the same wireless transmitter, the second frequency range having a second center frequency greater than the first center frequency, a second highest frequency, and a second lowest frequency."*

Petitioner argues that these limitations are disclosed by the combination of IEEE 802.11n D2.0 and IEEE 802.11-2007. Pet. 28. As to the limitations requiring "transmitting" the relevant information "using a wireless transmitter," Petitioner asserts that one of ordinary skill "would

[3] Because we are persuaded that Petitioner has shown that the proposed combination teaches the subject matter recited in the preamble, we need not decide whether the preamble is limiting for purposes of this Decision.

necessarily understand that transmitting information wirelessly requires a 'wireless transmitter,'" and that the '802 patent "expressly acknowledges that such transmitters were known in the art." *Id.* (citing Ex. 1001, Fig. 1; Ex. 1003 ¶¶ 294–299). Petitioner further argues that there would be no practical way to up-convert the relevant signals without a wireless transmitter, and IEEE 802.11-2007 expressly discloses examples of wireless transmitters. *Id.* at 28–29 (citing Ex. 1003 ¶¶ 294–299; Ex. 1003 ¶ 222).

As to the limitations requiring that "first information" be transmitted across a "first frequency range having a ***first center frequency***," and simultaneously, that "second information" be transmitted across a "second frequency range having a ***second center frequency greater than the first center frequency***," Petitioner argues that these limitations are rendered obvious by "a combination of IEEE 802.11n D2.0 with the 802.11 standard." Pet. 29, 34. "Specifically," Petitioner contends, "802.11n D2.0 defines two formats of wireless transmission: HT duplicate format and non-HT duplicate format." *Id.* at 29. "In HT duplicate format," according to Petitioner, "signals in two halves of the occupied channel width contain the same information," while "non-HT duplicate format" is a "mode of operation of the PHY that duplicates a 20 MHZ non-HT transmission in two adjacent 20 MHz channels, allowing a non-HT BSS [(basic service set)] on either channel to receive the transmission." *Id.* at 29–30 (citing Ex. 1003 ¶¶ 275–294).

Relying on Dr. Negus, Petitioner argues that IEEE 802.11n D2.0 "sets out the equations (in 'complex base-band signal notation') that define the transmissions in HT duplicate and non-HT duplicate format." Pet. 30 (citing Ex. 1003 ¶¶ 275–281). Specifically, Petitioner points to equations (20-60)

and (20-61) in in Section 20.3.10.11 of IEEE 802.11n D2.0, and argues that these equations "describe the transmission of 'first information' across 'a first frequency range' that is defined by a 'first highest frequency,' and 'first center frequency,' and a 'first lowest frequency,'" as well as "second information" across "a second frequency range" that is defined by a "second center frequency greater than the first center frequency," a "second highest frequency," and a "second lowest frequency." *Id.* at 30–31, 34–35; Ex. 1003 ¶¶ 104–105, 279–280. These equations, along with Dr. Negus's annotations, are reproduced below.

IEEE 802.11n D2.0 Eq. (20-60) describing HT Duplicate Format

$$r_{HT-DATA}^{i_{TX}}(t) = \frac{1}{\sqrt{N_{Duplicate}^{Tone}}} \sum_{n=0}^{N_{SYM}-1} w_{T_{SYM}}(t - nT_{SYM})$$

$$\cdot \sum_{k=-N_{SR}}^{N_{SR}} (D_{k,n} + p_{n+z}P_k)([Q_{k-32}]_{i_{TX},1} \exp(j2\pi(k - 32)\Delta_F(t - nT_{SYM} - T_{GI}))$$

$$+ j[Q_{k+32}]_{i_{TX},1} \exp(j2\pi(k + 32)\Delta_F(t - nT_{SYM} - T_{GI})))$$

Example disclosure of both a *"first highest frequency"* and a *"second highest frequency"*

Example disclosure of a *"first center frequency"*

Example disclosure of both a *"first lowest frequency"* and a *"second lowest frequency"*

Example disclosure of both *"first information"* and *"second information"*

Example disclosure of a *"second center frequency"* that is *"greater than the first center frequency"*

IEEE 802.11n D2.0 Eq. (20-61) describing Non-HT Duplicate Format

Example disclosure of both a "first highest frequency" and a "second highest frequency"

Example disclosure of a "first center frequency"

$$r_{LEG-DUP}^{i_{TX}}(t - nT_{SYM}) = \frac{1}{\sqrt{N_{Duplicate}^{Tone}}} \sum_{n=0}^{N_{SYM}-1} w_{T_{SYM}}(t - nT_{SYM})$$

$$\cdot \sum_{k=-26}^{26} (jD_{k,n} + p_n P_k)(\exp\left(j2\pi(k - 32)\Delta_F\left(t - nT_{SYM} - T_{GI} - T_{CS}^{i_{TX}}\right)\right)$$

$$+j \exp\left(j2\pi(k + 32)\Delta_F\left(t - nT_{SYM} - T_{GI} - T_{CS}^{i_{TX}}\right)\right))$$

Example disclosure of both a "first lowest frequency" and a "second lowest frequency"

Example disclosure of both "first information" and "second information"

Example disclosure of a "second center frequency" that is "greater than the first center frequency"

Dr. Negus's annotated figures showing the "first center frequency" in equations (20-60) and (20-61) of IEEE 802.11n D2.0 using a red box and arrow, and the "second center frequency" with a blue box and arrow." Pet. 30–31 (citing Ex. 1003 ¶¶ 279–280), 34–35 (citing Ex. 1003 ¶¶ 279–280).

Petitioner argues that "[t]hese equations and their disclosure of frequency ranges are reinforced by IEEE 802.11-2007, which includes disclosures of the 'transmit spectrum mask' that corresponds to the 'transmitted spectral density of the transmitted signal.'" Pet. 31 (citing Ex. 1003 ¶¶ 275–294). Dr. Negus provides an annotated version of this "transmit spectrum mask" from Annex I of IEEE 802.11-2007, which is reproduced below.

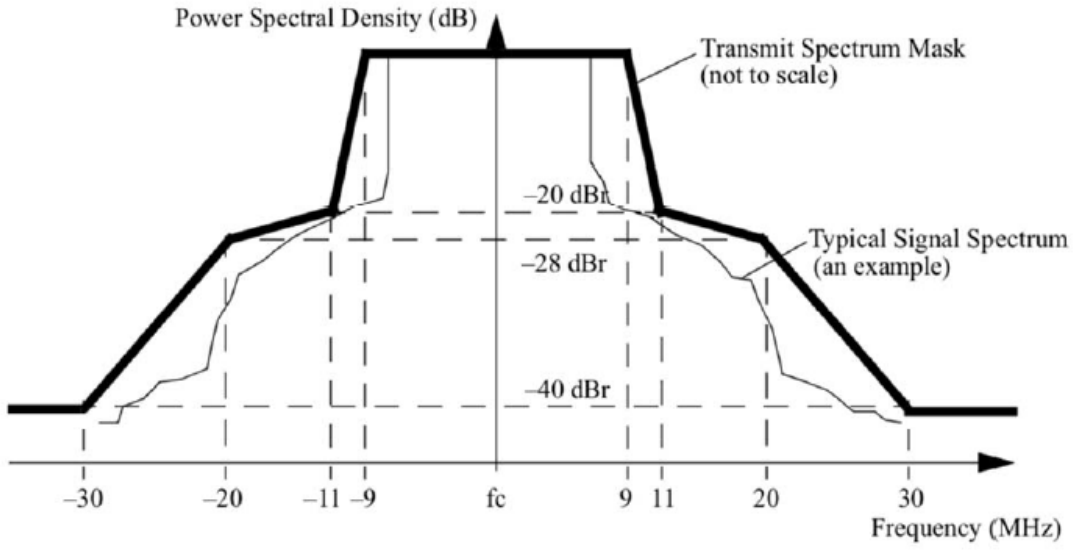

Figure I.1—Transmit spectrum mask

Dr. Negus's annotated figure showing a "transmit spectrum mask" from Figure I.1 of Annex I of IEEE 802.11-2007. Pet. 31–32 (citing Ex. 1005, Figure I.1).

Petitioner asserts that this "transmit spectrum mask visually illustrates the first highest frequency, the first lowest frequency, and the first center frequency, and thus defines the 'first frequency range' across which the first information is transmitted." *Id.* at 31.

Next, Petitioner argues that "IEEE 802.11n D2.0 expressly teaches that the maximum allowable transmit power by regulatory domain' is discussed in Annex I of the 802.11 standard." Pet. 32 (citing Ex. 1003 ¶¶ 275–294; Ex. 1005[4] § 20.3.20.3). "Thus," according to Petitioner, one of ordinary skill "would understand that Figure I.1 from IEEE 802.11-2007, when duplicated, shows what transmissions in HT or non-HT duplicate

[4] It appears that Petitioner mistakenly cites to Exhibit 1005 instead of Exhibit 1004. Pet. 32.

format would be like," as demonstrated in Dr. Negus's annotated figure reproduced below.

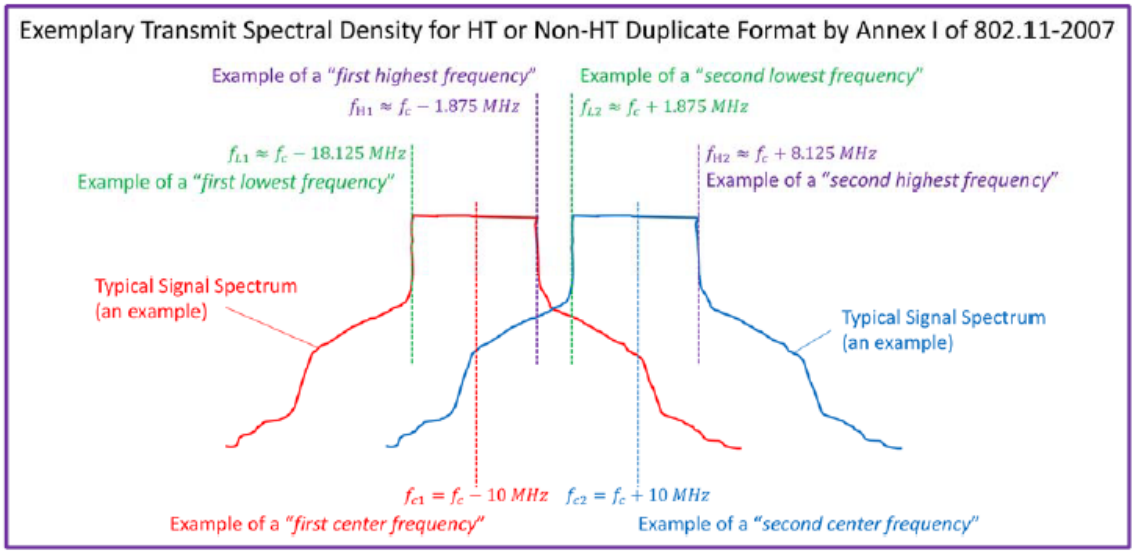

Dr. Negus's annotated figure showing an "exemplary transmit spectral density for HT or non-HT duplicate format" in Annex I of 802.11-2007, showing a "first center frequency" in red and a "second center frequency" in blue. Pet. 33 (citing Ex. 1003 ¶¶ 290–291), 36 (citing Ex. 1003 ¶¶ 290–291).

Petitioner and Dr. Negus further provide "[a]nother visual representation of what the first frequency range would look like in HT duplicate and non-HT duplicate format" from Figure 5.5 in a textbook entitled "Next Generation Wireless LANs: Throughput, Robustness, and Reliability in 802.11n," by Eldad Perahia and Robert Stacey" (Ex. 1006, "Perahia"), reproduced below.

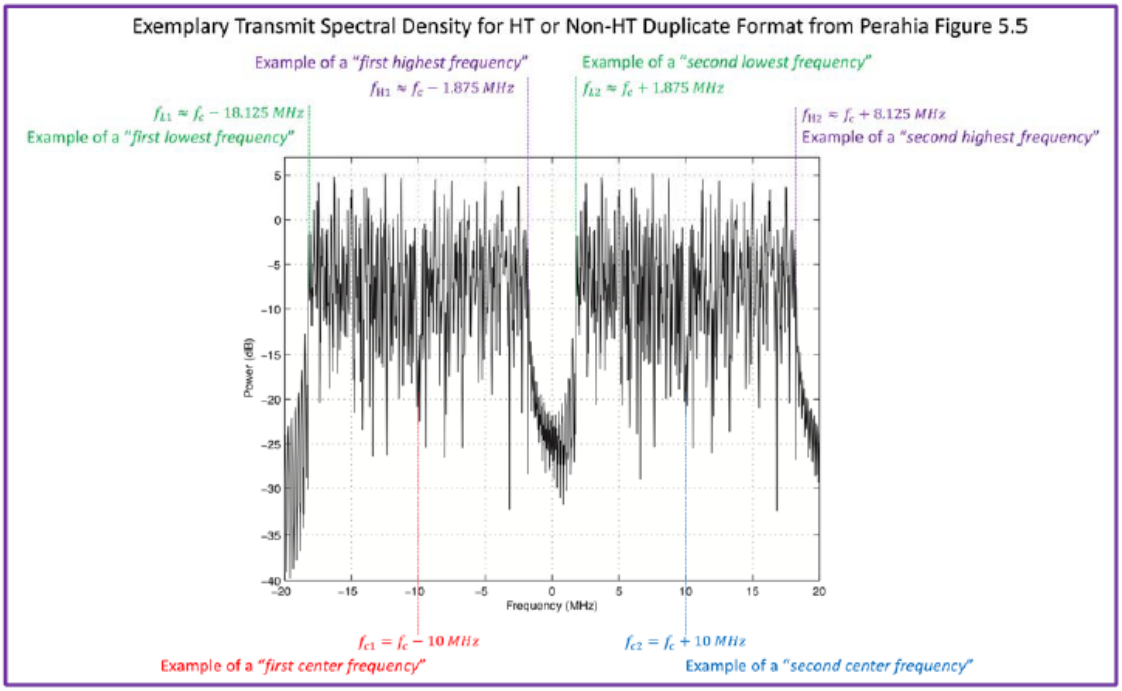

Petitioner's and Dr. Negus's annotated version of Figure 5.5 of Perahia showing what they identify as a "first center frequency" in red and a "second center frequency" in blue. Pet. 33–34 (citing Ex. 1003 ¶¶ 292–293).

Finally, Petitioner argues that one of ordinary skill reading IEEE 802n D2.0 "would understand that the HT duplicate and non-HT duplicate formats disclosed therein require 'first' and 'second' information being transmitted 'simultaneously' on different carrier frequencies (i.e., on first and second frequencies)." Pet. 36 (citing Ex. 1003 ¶¶ 303–322). Petitioner further contends that IEEE 802.11-2007 shows a wireless transmitter that "transmits first and second information 'simultaneously.'" *Id.* at 37 (citing Ex. 1003 ¶¶ 296, 303–322).

Therefore, Petitioner asserts, "IEEE 802.11n D2.0 in view of IEEE 802.11-2007 disclose explicitly or render obvious" the claimed "first center frequency" and "second center frequency." Pet. 34–35.

Patent Owner responds by arguing that Petitioner relies on "the 40 MHz channel disclosed in IEEE 802.11n D2.0 as disclosing two 'center

frequencies,'" but "the IEEE 802.11n D2.0's 40 MHz channel makes perfectly clear both in its equations and in it text that it has only ***one*** center frequency, not two," as required by claim 1. Prelim. Resp. 18 (citing Pet. 29–36). "This," Patent Owner explains, "is because the data within the channel is transmitted in one baseband signal that is upconverted to one carrier signal with one center frequency." *Id.*; *see* PO Prelim. Sur-reply 4–5.

More specifically, Patent Owner argues that Petitioner "rel[ies] in the alternative on two specific data formats to transmit data within the 40 MH channel of IEEE 802.11n D2.0: the HT duplicate and non-HT duplicate data formats." Prelim. Resp. 19. Relying on Dr. Cooklev, Patent Owner asserts that "IEEE 802.n D2.0 is clear that the data in the 40 MHz channel for each of the HT duplicate and non-HT duplicate formats is represented by a single baseband signal that is subsequently up-converted to a single carrier signal which has a single 'center frequency' (carrier frequency)." *Id.* at 19–21 (citing Ex. 2001 ¶ 54; Ex. 1004, 240–241, 279–280). In support, Patent Owner contends that IEEE 802.n D2.0 includes two equations (equations (20-60) and (20-61)) for representing the baseband signals in the 40 MHz channels for HT duplicate and non-HT duplicate formats, and a single equation (equation 20-1) representing the single carrier signal that these two baseband signals are upconverted to and that is transmitted by the transmitter. *Id.* at 20–21 (citing Ex. 2001 ¶ 54; Ex. 1004, 240–241, 279–280). Patent Owner also argues that Petitioner and Dr. Negus acknowledged that the HT duplicate and non-duplicate formats are part of "a single composite complex baseband signal." *Id.* at 19–20 (citing Pet. 36; Ex. 1003 ¶ 318) (emphasis added). Thus, according to Petitioner, the 40 MHZ

channel transmitted by the transmitter in IEEE 802.11n D2.0 discloses one center frequency, not two, as required by claim 1. *Id.* at 22, 24.

Additionally, Patent Owner argues that Petitioner's reliance on the signals represented by equations (20-60) and (20-61) in IEEE 802.n D2.0 is misplaced because "the claim requires 'transmitting' first and second data across first and second frequency ranges with first and second center frequencies," and "[t]he standard is clear that equations 20-60 and 20-61 are baseband signals, which are never transmitted." Prelim. Resp. 26 (citing Ex. 1001, claim 1). "[I]nstead," according to Patent Owner, "'the actual transmitted signal' is the up-converted baseband signals, up-converted to the carrier signal with a single center frequency f_c." *Id.* (citing Ex. 1004, 240–241; Ex. 2001 ¶¶ 55–56). Thus, Patent Owner contends, "Petitioner's annotation" in its figures "of what is supposedly a lowest, highest, or center frequency in a baseband signal is not the frequency values of the signal that is actually transmitted." *Id.*

Patent Owner further argues that the "small dip" in the middle of the frequency profile in Dr. Negus's annotated figures does not support Petitioner's position. Prelim. Resp. 18–19. Patent Owner argues that Dr. Negus's "exemplary transmit spectral density" figure in paragraph 290 of his declaration is "made-up," does not appear in the standard, and contradicts another figure in the standard showing a single frequency range without any dip in the middle. *Id.* at 28–30 (citing Ex. 1004, 294; Pet. 33). In any event, Patent Owner asserts, Dr. Negus's figure "still would not disclose two 'center frequencies' as claimed" because "the entirety of the data within the 40 MHz channel, with or without a dip in the middle, is contained within a single baseband signal that is upconverted to a single carrier signal with a

single center frequency f_c." *Id.* at 29. Finally, Patent Owner argues that Perahia's Figure 5.5 does not help Petitioner because "even if the frequency profile of the signal output within the 40 MHz channel of IEEE 802.11n D2.0 contained a 'dip' in the middle, that entire signal is still up-converted to a single carrier and contains a single 'center frequency.'" *Id.* at 30–31 (citing Ex. 1006, Fig. 5.5; Pet. 33).

Petitioner responds that IEEE 802.11n D2.0 "discloses transmission using two 20 MHz frequency ranges, each having a center frequency that was up-converted from a baseband signal." Pet. Prelim. Reply 3. Relying on Dr. Negus, Petitioner argues that "the draft standard discloses how to calculate two center frequencies—one for each 20 MHz frequency range." *Id.* at 3–4 (citing Ex. 1003 ¶¶ 279–286, 304–307). "Moreover," Petitioner asserts, both equations (20-60) and (20-61) "identify the two center frequencies (-)32Δ_F and +)32 Δ_F) that are calculated during the process of up-converting the baseband signal to carrier signals." *Id.* at 4 (citing Ex. 1003 ¶¶ 279, 280). According to Petitioner, Patent Owner's assertion that equations (20-60) and (20-61) show that there is only one center frequency "conveniently ignore[s] § 20.3.8 (Ex. 1004, p. 267)," which states that "'in the upper/lower 20 MHz of a 40 MHz channel' the 'mathematical definition of transmission shall follow that of a 20 MHz channel with f_c in Equation (20-1) replaced by f_c±10 MHz,' *i.e.*, two center frequencies at '+10'/'-10.'" *Id.* (citing Ex. 1003 ¶ 101). Petitioner contends that this meets Patent Owner's construction, because that construction "only requires that the carrier signal frequency be an up-converted baseband signal, which Dr. Negus explains is taught by the art and would be obvious to" a person of ordinary skill. *Id.* (citing Ex. 1003 ¶¶ 299, 322).

With respect to Patent Owner's allegations that Dr. Negus's annotated "Transmit spectrum mask" in paragraph 290 of his declaration is "made up," Petitioner argues that "Dr. Negus explains the origin of his annotations on pages 95, 96, and 99 of his declaration." Pet. Prelim. Reply 4–5. "Likewise," Petitioner asserts, Dr. Negus "explains that neither his annotated figure (page 99 [(paragraph 290)]) nor Fig. 5.5 from Perahia is a 'frequency mask' for a single channel, as [Patent Owner] would have this Board believe." *Id.* at 5. "Instead," according to Petitioner, Dr. Negus's "annotated figures reflect transmit spectral densities for the two frequency ranges transmitted using [IEEE 802.11n D2.0's] HT or Non-HT Duplicate formats." *Id.* (citing Ex. 1003 ¶¶ 290–293). "Moreover," Petitioner contends, "the area in these figures to which [Patent Owner] refers as . . . 'the small dip' actually reflects the intersection of the two separately processed signals, each of which spans their own frequency range and has their own center frequency, as disclosed in [IEEE 802.11n D2.0] and Perahia." *Id.*

Based on the present record, Petitioner has made a sufficient case for purposes of institution that these limitations would have been obvious over IEEE 802.11n D2.0 in view of IEEE 802.11-2007. In particular, we find that Petitioner has made a sufficient showing at this early stage that equations (20-60) and (20-61) disclose first and second "center frequencies" each of which represent "the carrier signal frequency the baseband signal is upconverted to." The evidence supporting this preliminary conclusion will be discussed below.

First, we begin with Dr. Negus's annotated versions of equations (20-60) and (20-61), which are again reproduced below.

IEEE 802.11n D2.0 Eq. (20-60) describing HT Duplicate Format

$$r_{HT-DATA}^{i_{TX}}(t) = \frac{1}{\sqrt{N_{Duplicate}^{Tone}}} \sum_{n=0}^{N_{SYM}-1} w_{T_{SYM}}(t - nT_{SYM}) \cdot \sum_{k=-N_{SR}}^{N_{SR}} (D_{k,n} + p_{n+z}P_k)([Q_{k-32}]_{i_{TX},1} \exp(j2\pi(k - 32)\Delta_F(t - nT_{SYM} - T_{GI})) + j[Q_{k+32}]_{i_{TX},1} \exp(j2\pi(k + 32)\Delta_F(t - nT_{SYM} - T_{GI})))$$

Example disclosure of both a *"first highest frequency"* and a *"second highest frequency"*

Example disclosure of a *"first center frequency"*

Example disclosure of both a *"first lowest frequency"* and a *"second lowest frequency"*

Example disclosure of both *"first information"* and *"second information"*

Example disclosure of a *"second center frequency"* that is *"greater than the first center frequency"*

IEEE 802.11n D2.0 Eq. (20-61) describing Non-HT Duplicate Format

$$r_{LEG-DUP}^{i_{TX}}(t - nT_{SYM}) = \frac{1}{\sqrt{N_{Duplicate}^{Tone}}} \sum_{n=0}^{N_{SYM}-1} w_{T_{SYM}}(t - nT_{SYM}) \cdot \sum_{k=-26}^{26} (jD_{k,n} + p_nP_k)(\exp\left(j2\pi(k - 32)\Delta_F\left(t - nT_{SYM} - T_{GI} - T_{CS}^{i_{TX}}\right)\right) + j\exp\left(j2\pi(k + 32)\Delta_F\left(t - nT_{SYM} - T_{GI} - T_{CS}^{i_{TX}}\right)\right))$$

Example disclosure of both a *"first highest frequency"* and a *"second highest frequency"*

Example disclosure of a *"first center frequency"*

Example disclosure of both a *"first lowest frequency"* and a *"second lowest frequency"*

Example disclosure of both *"first information"* and *"second information"*

Example disclosure of a *"second center frequency"* that is *"greater than the first center frequency"*

Dr. Negus testifies that, in these equations, "the '***complex number***' modulation values for each data subcarrier and symbol index, '$D_{k,n}$', of the '***PPDU encoding process***' discloses at least '**transmitting first information**.'" Ex. 1003 ¶ 284. And, he explains that "when the '***secondary channel is above***' the '***primary channel***' then the term '$-32\Delta_F$' discloses that a '**first center frequency**' . . . would be disclosed as '$f_{c1} = f_c - 32\ \Delta_f$', or thus since '$\Delta_F = 312.5$ *kHz*', then this '**first center frequency**' for

such a '***primary channel***' would be disclosed as '$f_{c1} = f_c$ – 10 MHz'." *Id.* ¶ 285. "Similarly," Dr. Negus testifies, one of ordinary skill "would understand that when the '***secondary channel . . . is below***' the '***primary channel***', then this '**first center frequency**' for such a '***secondary channel***' would be disclosed as $f_{c1} = f_c$ – 10 MHz'." *Id.* ¶ 286 (alteration in original). This evidence supports a preliminary determination that equations (20-60) and (20-61) disclose a first frequency range having a first center frequency of $f_{c1} = f_c$ – 10 MHz, and that this frequency range represents the upconversion of a baseband signal to a carrier (center) frequency of f_c – 10 MHz.

In the same vein, Dr. Negus testifies that "when the ***secondary channel is above***' the '***primary channel***'" then "the term '+32Δ_F' discloses that a '***second center frequency***' for such a '***secondary channel***' would be disclosed as '$f_{c2} = f_c + 32\Delta_f$', or thus since Δ_F = 312.5 *kHz*', then this '**second center frequency**' for such a '***[secondary]***[5] ***channel***' would be disclosed as '$f_{c2} = f_c$ + 10 MHz'." Ex. 1003 ¶ 306. "Similarly," Dr. Negus explains, one of ordinary skill "would understand that when the '***secondary channel is . . . below***' the '***primary channel***', then this '**secondary center frequency**' for such a '***primary channel***' would be disclosed as '$f_{c2} = f_c$ + 10 MHz'." *Id.* ¶ 307 (alteration in original). This evidence supports a preliminary determination that equations (20-60) and (20-61) disclose a second frequency range having a second center frequency of $f_{c2} = f_c$ + 10 MHz, and that this frequency range represents the upconversion of a

[5] Dr. Negus refers to the "primary channel" here in his Declaration, but this appears to be a typographical error because the earlier part of the sentence indicates that the center frequency of the "secondary channel" is being discussed. Ex. 1003 ¶ 306.

baseband signal to a carrier (center) frequency of f_c + 10 MHz. Based on the present record, this testimony appears to be reasonable and consistent with the disclosures of the references.

We also preliminarily agree with Dr. Negus's testimony that "because such '**second center frequency**' of '$f_{c2} = f_c$ + 10 MHz' exceeds such '**first center frequency**' of '$f_{c1} = f_c$ - 10 MHz'" by a value of 20 MHz, equations (20-60) and (20-61) disclose a "second center frequency greater than the first center frequency," as required by limitation [1b]. Ex. 1003 ¶ 308. Additionally, we agree that these equations disclose a "first highest frequency," "first lowest frequency," "second highest frequency," and "second lowest frequency," as Dr. Negus explains. *Id.* ¶¶ 289, 309.

Our preliminary determination is also supported by Dr. Negus's testimony concerning the "transmit spectrum mask" in Annex I of IEEE 802.11-2007. In this regard, Dr. Negus testifies that one of ordinary skill would have understood from the disclosures of IEEE 802.11n D2.0 that Annex I of IEEE 802.11-2007 "specifies the '*Transmit spectrum mask*' including '*an example*' of a '*Typical Signal Spectrum*' that would correspond to the '*transmitted spectral density*' of the transmitted signal' for such a '**first frequency range having a first center frequency, a first highest frequency, and a first lowest frequency**' of either the IEEE 802.11n D2.0 '***HT duplicate format***' and '***non-HT duplicate format***' in either a '***primary channel***' or a '***secondary channel***'." Ex. 1003 ¶ 290. Dr. Negus also testifies that the figure below, which he prepared, shows this "Typical Signal Spectrum" (shown in Figure I.1 of Annex I of IEEE 802.11-2007) for each of the "primary channel" (red) and "secondary channel" (blue). *Id.* ¶¶ 290–291.

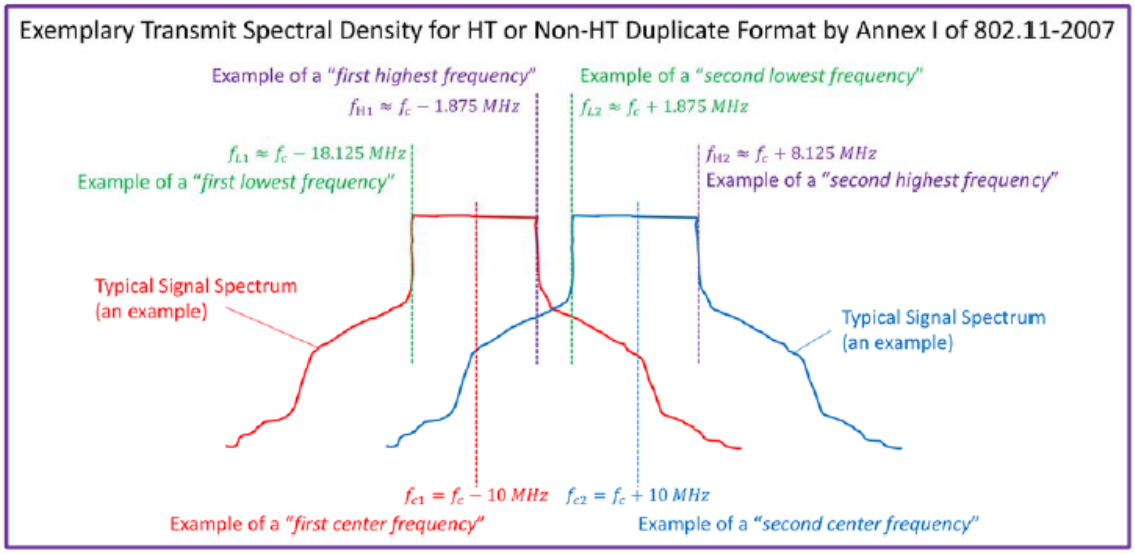

This figure is consistent with Dr. Negus's testimony concerning equations (20-60) and (20-61), and both indicate a first signal spectrum (shown in red in the above figure) with a first center frequency of $f_{c1} = f_c - 10$ MHz, and a second signal spectrum (shown in blue in the above figure) with a second center frequency of $f_{c2} = f_c + 10$ MHz. It is also consistent with Figure 5.5 from the Perahia textbook, which also shows first and second frequency ranges with a "first center frequency" of $f_{c1} = f_c - 10$ MHz and a "second center frequency of $f_{c2} = f_c + 10$ MHz, as shown below with annotations from Dr. Negus's declaration.

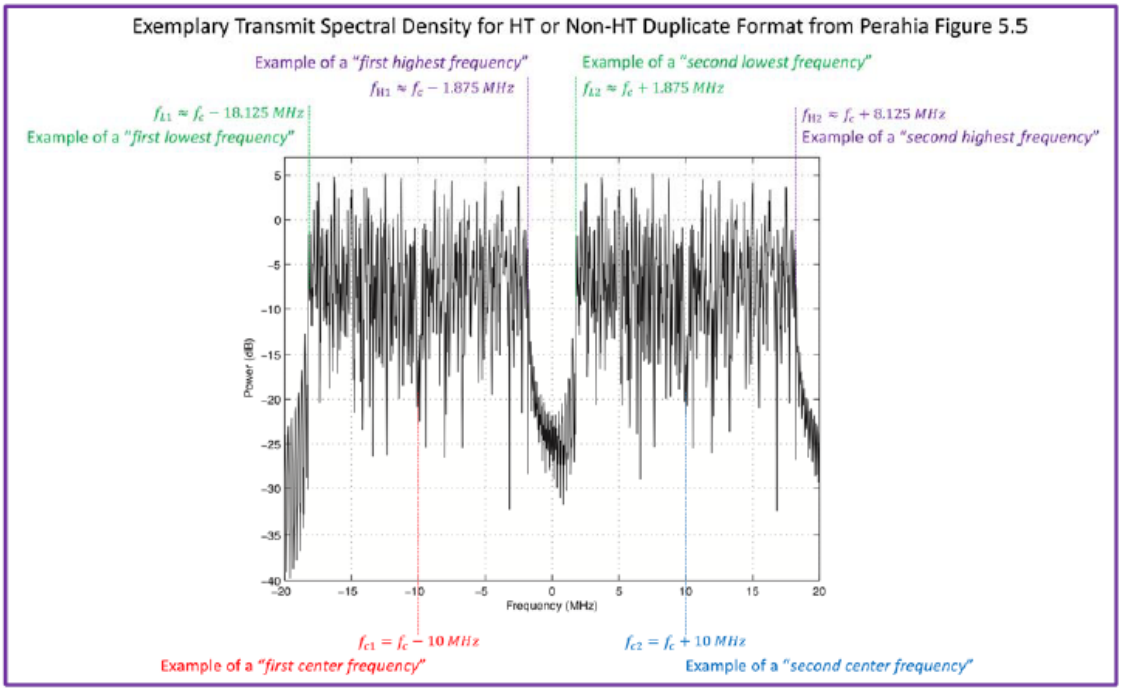

At this early stage of the proceeding, we determine that the evidence above is sufficient to establish a reasonable likelihood that the limitations at issue are taught by the combination of IEEE 802.11n D2.0 and IEEE 802.11-2007.

Based on the present record, Patent Owner's arguments do not undermine our determination that Petitioner's evidence has met the threshold showing required for institution. First, even if Patent Owner is correct that the two 20 MHz channels upon which Petitioner relies are further upconverted to another carrier frequency before transmission, this additional step would not appear to alter the fact that the signal still includes first and second frequency ranges with first and second center frequencies, respectively. Second, we preliminarily disagree that the first and second frequency ranges do not have "carrier frequencies" under Patent Owner's proposed construction of that term. Based on Dr. Negus's testimony and the underlying disclosures of the references, the first and second frequency

ranges appear to represent signals that were upconverted from baseband signals at center (carrier) frequencies of $f_{c1} = f_c - 10$ MHz and $f_{c2} = f_c + 10$ MHz. Therefore, these center frequencies appear to be "carrier signal frequencies" that "the baseband signal is upconverted to." Finally, we have considered Patent Owner's argument that Dr. Negus's "exemplary transmit spectral density" figure in paragraph 290 of his declaration is "made-up," does not appear in the standard, and contradicts another figure in the standard showing a single frequency range without any dip in the middle, but determine that Dr. Negus's testimony has sufficient basis in the record to warrant going forward at this stage. *Id.* at 28–30 (citing Ex. 1004, 294; Pet. 33). Patent Owner may further challenge Dr. Negus's opinions, and the bases therefore, during the trial.

Based on the foregoing, we preliminarily determine that, on the record before us, Petitioner's cited evidence sufficiently supports its contentions regarding this limitation for purposes of institution.

c) Summary for Claim 1

For the foregoing reasons, we are persuaded that Petitioner's cited evidence and reasoning demonstrates a reasonable likelihood that Petitioner would prevail in its contentions regarding claim 1.

5. Dependent Claims 2–9

Petitioner contends that claims 2–9, which depend from claim 1, are unpatentable based on the proposed combination of IEEE 802.11n D2.0 and IEEE 802.11-2007. Pet. 22, 38–55. Patent Owner does not provide any separate argument against these dependent claims at this stage of the proceeding. *See* Prelim. Resp. 3–41. Based on the evidence of record, we

determine that Petitioner has demonstrated a reasonable likelihood that claims 2–9 are unpatentable over the prior art.

E. Ground 2: Obviousness of Claims 1–4 and 7–9 Based on Shearer

Petitioner contends that claims 1–4 and 7–9 would have been obvious over Shearer. Pet. 55–71. Patent Owner disagrees, arguing that Shearer does not teach transmitting a signal with two different "center frequencies," as the claims require. Prelim. Resp. 33–40.

1. Overview of Shearer (Ex. 1007)

Shearer is entitled "packet generation systems and methods," and discloses "various embodiments of methods, systems, and apparatus for increasing packet generation in a digital communication system." Ex. 1007, code (57). Shearer explains that, "[i]n one exemplary method embodiment, subcarriers are added to a packet in a wireless local area network transmission to increase the data rate." *Id.* Shearer further discloses an IEEE 802.11 system that creates "a 40 MHz wide packet subcarrier layout" that "match[es] the subcarrier structure of two 20 MHz 802.11 a/g OFDM packets, whose center frequencies are spaced by 10 MHz," and "adds extra subcarriers to a gap in the middle" of the waveform. *Id.* ¶ 47.

2. Analysis of Independent Claim 1

a) 1[pre]: "[a] method of transmitting information in a wireless communication channel comprising:"

Petitioner argues that, to the extent the preamble is limiting, Shearer discloses it. Pet. 56. Specifically, Petitioner asserts that Shearer discloses "a transmitter for an 802.11 device" to "operate in the 5 GHz band," as shown in Figure 3 of Shearer. *Id.* at 56–57 (citing Ex. 1003 ¶¶ 415–416; Ex. 1007, Fig. 3, ¶¶ 38–40). According to Petitioner, "Shearer further teaches using

transmitters of the type disclosed to transmit information in a wireless communication channel," as well as "multi-carrier transmission in which 'two 20 MHz 802.11a input signals are received at the PHY unit 300 from FIG. 3 substantially simultaneously.'" *Id.* at 57 (citing Ex. 1003 ¶ 416).

Patent Owner does not present arguments regarding the preamble. *See generally* Prelim. Resp.

We determine that, on the record before us, Petitioner's cited evidence sufficiently supports its contentions regarding the preamble.

> *b) [1a]: "transmitting first information across a first frequency range using a wireless transmitter, the first frequency range having a first center frequency, a first highest frequency, and a first lowest frequency"; and*
>
> *[1b]: "simultaneously transmitting second information across a second frequency range using the same wireless transmitter, the second frequency range having a second center frequency greater than the first center frequency, a second highest frequency, and a second lowest frequency."*

Petitioner argues that these limitations are taught by Shearer. Pet. 57, 60.

As to the limitations requiring "transmitting" the relevant information "using a wireless transmitter," Petitioner asserts that one of ordinary skill "would necessarily understand that transmitting information wirelessly requires a 'wireless transmitter,'" and that the '802 patent "acknowledges that such transmitters were known in the art." Pet. 58 (citing Ex. 1001, Fig. 1; Ex. 1003 ¶¶ 294–299). Petitioner further argues that "Shearer discloses a wireless transmitter for multi-carrier transmission." *Id.* (citing Ex. 1003 ¶¶ 420–430).

As to the limitations requiring that "first information" be transmitted across a "first frequency range having a ***first center frequency***," and

simultaneously, that "second information" be transmitted across a "second frequency range having a ***second center frequency greater than the first center frequency***," Petitioner argues that these limitations are rendered obvious by Shearer. Pet. 58, 60. Specifically, Petitioner contends, "Shearer teaches transmission in a 40 MHz channel comprised of two 20 MHZ channels," explaining that for "an IEEE 802.11a or IEEE 802.11g OFDM signal, a packet 400 within each 20 MHz channel has fifty-two (52) subcarriers" but "the packet is 20 MHz wide because that is the span of the 64 points in the IFFT' even though 'the active (populated) subcarriers span a spectrum somewhat less than 20 MHz wide, about 16.5 MHz.'" *Id.* at 58 (citing Ex. 1003 ¶ 420). According to Petitioner, "Shearer illustrates these frequency ranges in, among other places, Figure 7, by diagramming the 'subcarrier structure of two 20 MHz 80211a/g OFDM packets' wherein the respective 'center frequencies are spaced by 10 MHz' and there is an 11 subcarrier gap 702 between the packets.'" *Id.* (citing Ex. 1007, Fig. 7; Ex. 1003 ¶ 421). Dr. Negus submits an annotated version of Figure 7 of Shearer, reproduced below, showing "how these subcarriers teach the transmission across a first frequency range, and define the bounds of the frequency range (i.e., the 'first lowest frequency,' the 'first center frequency,' and the 'first highest frequency')."

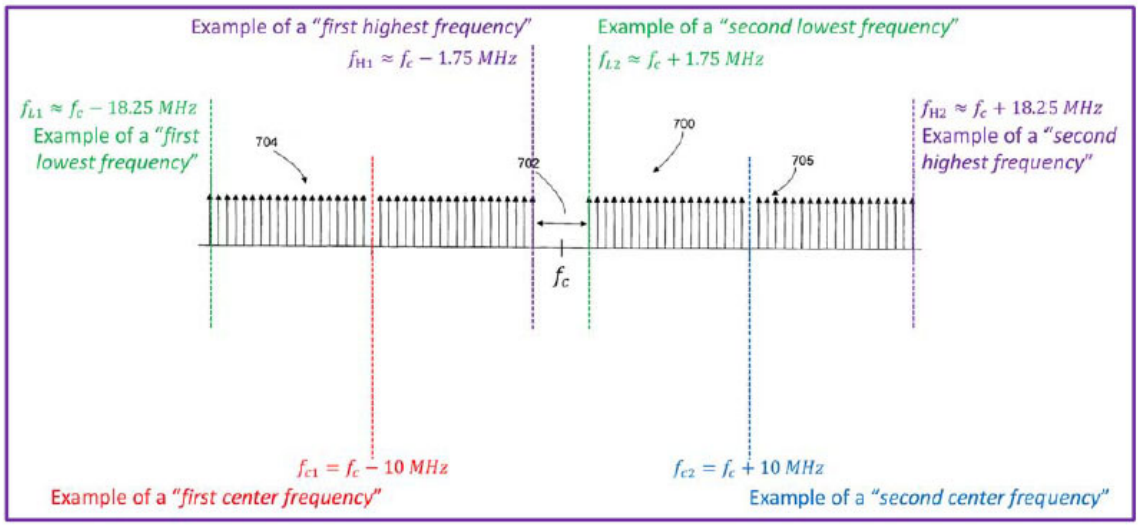

Dr. Negus's annotated version of Shearer's Figure 7 showing a "first center frequency" (red) and a "second center frequency" (blue). Pet. 59; Ex. 1003 ¶ 421.

"Additionally," Petitioner argues, "Shearer explains that the transmitter it teaches permits the signal, through 'mixer 314' to be 'unconverted to the desired transmit frequency' and 'amplified in the high powered amplifier' and sent to an 'antenna 318 for transmission.'" Pet. 59 (citing Ex. 1003 ¶ 427). Petitioner also argues that "Shearer teaches simultaneous transmission of second information across a second frequency range in its disclosure of an upper and lower transmission 'path'" in Figure 13, reproduced below. *Id.* at 60 (citing Ex. 1007, Fig. 13; Ex. 1003 ¶¶ 420–428, 431–438).

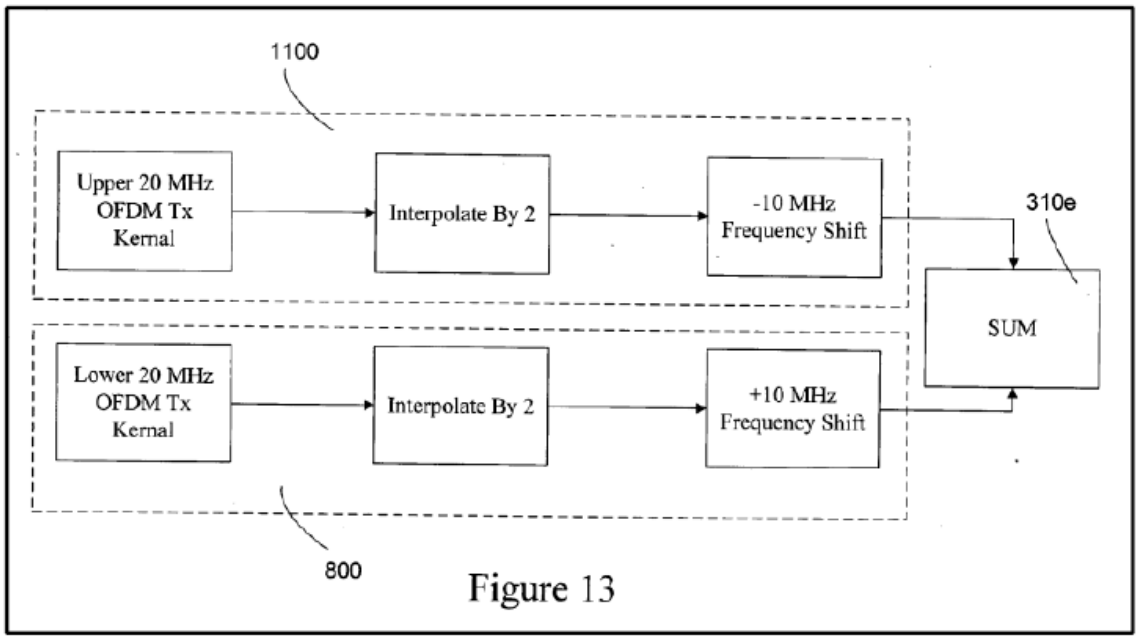

Figure 13

Shearer's Figure 13 shows an upper path and lower path each of which shifts the signal ± 10 MHz.[6] Pet. 60; Ex. 1007, Fig. 13; Ex. 1003 ¶¶ 420–428, 431–438).

Petitioner argues that one of ordinary skill would have understood that these signals (the upper path or the lower path) are 'processed separately' (albeit substantially simultaneously) and that either can consist of 'transmitting second information across a second frequency range." *Id.* at 60–61 (citing Ex. 1003 ¶ 433).

"As for the 'second center frequency greater than the first center frequency,'" Petitioner argues that "Shearer describes shifting the signal of the lower path down by 10 MHz (to a 'first center frequency') and the signal of the upper path up by 10 MHz (to a 'second center frequency')." Pet. 61

[6] Petitioner asserts that Figure 13 has a "clear typographical error" in that it "mistakenly designat[es] the upper path as having a -10 MHz frequency shift and the lower path as having a + 10 MHz frequency shift." Pet. 61 n.1 (citing Ex. 1003 ¶ 236). According to Petitioner, it is "readily apparent from the specification and the other figures" that "those numbers are meant to be swapped with one another." *Id.*

(citing Ex. 1003 ¶ 435). Petitioner contends that, as Dr. Negus's annotated Figure 7 above shows, "a signal shifted up (the upper path) as Shearer requires would necessarily have a center frequency greater than the signal that has been shifted down (the lower path)." *Id.* (citing Ex. 1003 ¶¶ 421, 435).

Patent Owner responds that "Petitioner['s] second ground shares the same infirmities as its first" because, as Petitioner acknowledges, "Shearer teaches its methods with specific relations to the IEEE 802.11 standard" that formed the basis of Ground 1. Prelim. Resp. 33 (citing Pet. 55). Patent Owner notes that "[s]imilar to Ground 1, Petitioner[] rel[ies] on Shearer's disclosure of a 40 MHz channel formed by combining two 20 MHz channels in IEEE 802.11." *Id.* (citing Pet. 57–61). "Just as with Ground 1," Patent Owner contends, Petitioner "fails to show that Shearer discloses or renders obvious two center frequencies," and "it is undisputed that Shearer's 40 MHz channel is formed by upconverting the baseband signal to a single carrier signal with a single center (carrier) frequency." *Id.* at 33–34 (citing Ex. 2001 ¶¶ 67–68); *see* PO Prelim. Sur-reply 5.

To support this assertion, Patent Owner relies on Dr. Negus's superimposition of Shearer's Figures 3 and 13, reproduced below.

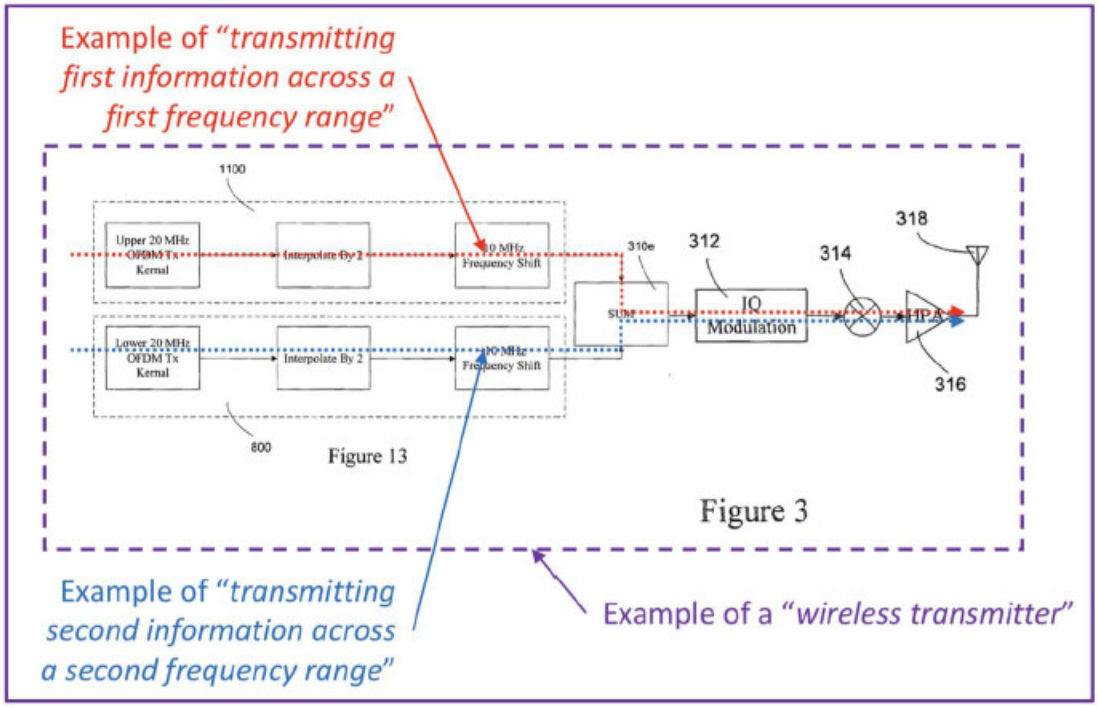

Dr. Negus's figure showing a combination of Figures 3 and 13 of Shearer. Prelim. Resp. 35; Ex. 1003 ¶ 428.

Patent Owner argues that, as shown in the above figure, "the 'upper 20 MHz' baseband signal (red) is created in box 1100," "[t]he 'lower 20 MHz' baseband signal (blue) is created in box 800," and "[t]he two baseband signals are aggregated in element 301e to create 40 MHz baseband signal," which "is then upconverted in the single upconverter 314, before it is amplified and transmitted." Prelim. Resp. 35. Thus, Patent Owner contends, "Shearer's 40 MHz channel performs a single up-conversion to a single carrier with a single center frequency." *Id.* at 35–39 (citing Ex. 2001 ¶¶ 69–75). This, according to Patent Owner, is different from the '802 patent's embodiments, such as Figure 2, that "show two up-conversions, each one to a different carrier signal with a different center frequency." *Id.* at 35–36 (citing Ex. 1001, Fig. 2).

Finally, Patent Owner argues that Dr. Negus's annotated version of Shearer's Figure 7 "does not disclose two different center frequencies as claimed." Prelim. Resp. 40 (citing Pet. 59). Instead, according to Patent Owner, "[t]he entirety of the signal shown" is "still a single baseband signal that is upconverted by a single mixer 314 to a single carrier with a single center frequency." *Id.* (citing Ex. 1007 ¶ 43); *see* PO Prelim. Sur-reply 5.

Petitioner responds that "Shearer discloses transmission using two adjacent 20MHz frequency ranges, each of which has a center frequency up-converted from a baseband signal." Pet. Prelim. Reply 5 (citing Ex. 1003 ¶¶ 421–424, 428, 432–437; Pet. 57–62). According to Petitioner, "Shearer also discloses two separate up-conversions applied to each respective one of the two adjacent 20 MHz frequency ranges as Dr. Negus described in detail." *Id.* (citing Ex. 1003 ¶¶ 422–428). "Given the similarity between IEEE 802.11n D2.0 and Shearer," Petitioner contends, "and the overlap of [Patent Owner's] arguments for both grounds, Petitioner's other arguments apply equally to Shearer." *Id.*

Based on the present record, Petitioner has made a sufficient case for purposes of institution that the limitations at issue would have been obvious over Shearer. In particular, we find that Petitioner has made a sufficient showing at this early stage that Shearer discloses first and second "center frequencies" each of which represent "the carrier signal frequency the baseband signal is upconverted to." The evidence supporting this preliminary conclusion will be discussed below.

Shearer explains that, "[i]n an IEEE 802.11 system, as shown in FIG. 7," waveform 700 "provides a 40 MHz packet's subcarrier structure matching the subcarrier structure of two 20 MHz 802.11a/g OFDM packets,

whose center frequencies are spaced by 10 MHz." Ex. 1007 ¶ 47 (emphasis added). Dr. Negus illustrates this signal structure in his annotated version of Shearer's Figure 7, which is again reproduced below.

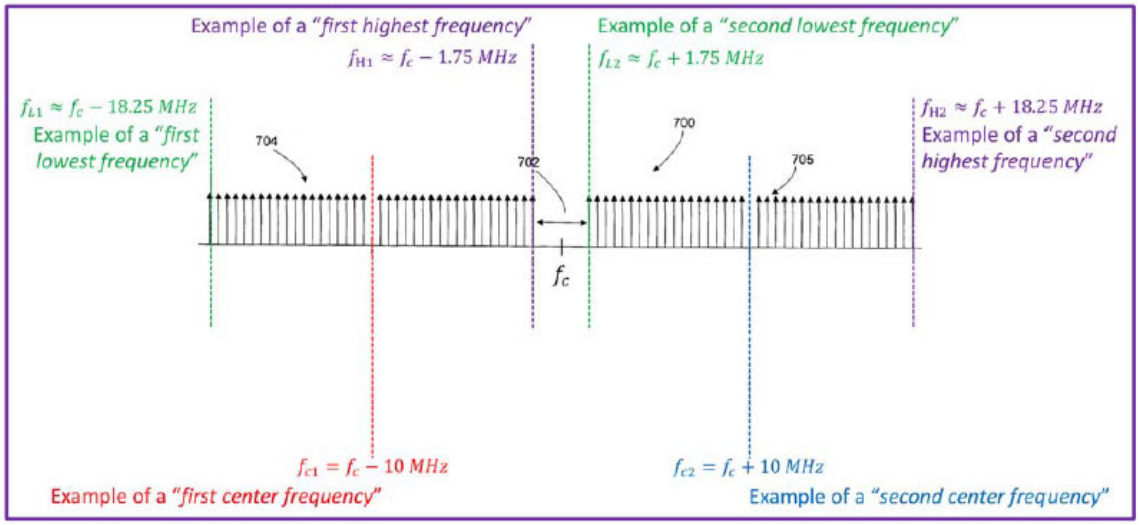

Dr. Negus testifies that this figure shows a first frequency range 704 having a first "center frequency" of "$f_{c1} = f_c - 10$" MHz and a second frequency range 705 having a second "center frequency" of "$f_{c2} = f_c + 10$ *MHz*." Ex. 1003 ¶¶ 424, 434. Shearer also appears to disclose two separate up-conversions applied to each respective one of the two adjacent 20 MHz frequency ranges as Dr. Negus described via Shearer's disclosure of multiplying the baseband signal by $e^{j2\pi f_{shift}t}$ where f_{shift} is respectively -10 MHz or +10 MHz. Pet. Prelim. Reply 5; Ex. 1003 ¶ 422, 432. This evidence supports a preliminary determination that Shearer discloses a first frequency range having a first center frequency of $f_{c1} = f_c - 10$ MHz and a second frequency range having a second center frequency of $f_{c2} = f_c + 10$ MHz, and that these frequency ranges represent the upconversion of baseband signals to carrier (center) frequencies of $f_c \pm 10$ MHz.

We also preliminarily agree with Dr. Negus's testimony that because Shearer's "second center frequency" of $f_{c2} = f_c + 10$ MHz exceeds the "first

center frequency" of '$f_{c1} = f_c$ - 10 MHz, Shearer discloses a "second center frequency greater than the first center frequency," as required by limitation [1b]. Ex. 1003 ¶ 434. Additionally, we agree that these equations disclose a "first highest frequency," "first lowest frequency," "second highest frequency," and "second lowest frequency," as Dr. Negus explains. *Id.* ¶¶ 424, 429, 436.

Based on the present record, Patent Owner's arguments do not undermine our determination that Petitioner's evidence has met the threshold showing required for institution for similar reasons as for Ground 1. First, as we explained in connection with Ground 1, even if Patent Owner is correct that the two 20 MHz channels upon which Petitioner relies are further upconverted to another carrier frequency before transmission, this additional step would not appear to alter the fact that the signal still includes first and second frequency ranges with first and second center frequencies, respectively. Second, as in Ground 1, we preliminarily disagree that the first and second frequency ranges do not have "center frequencies" that represent "carrier frequencies" under Patent Owner's proposed construction of the term "center frequency." Based on Dr. Negus's testimony and the underlying disclosures of the references, the first and second frequency ranges appear to represent signals that were upconverted from baseband signals at carrier frequencies of $f_{c1} = f_c – 10$ MHz and $f_{c2} = f_c + 10$ MHz. Therefore, these center frequencies appear to be "carrier signal frequencies" that "the baseband signal is upconverted to." Patent Owner may further challenge Dr. Negus's opinions, and the bases therefore, during the trial.

Based on the foregoing, we preliminarily determine that, on the record before us, Petitioner's cited evidence sufficiently supports its contentions regarding this limitation for purposes of institution.

a) Summary for Claim 1

For the foregoing reasons, we are persuaded that Petitioner's cited evidence and reasoning demonstrates a reasonable likelihood that Petitioner would prevail in its contentions regarding claim 1.

3. Dependent Claims 2–4 and 7–9

Petitioner contends that claims 2–4 and 7–9, which depend from claim 1, are unpatentable over Shearer. Pet. 22, 62–71. Patent Owner does not provide any separate argument against these dependent claims at this stage of the proceeding. *See* Prelim. Resp. 33–41. Based on the evidence of record, we determine that Petitioner has demonstrated a reasonable likelihood that claims 2–4 and 7–9 are unpatentable over the prior art.

F. Discretionary Denial Under 314(a)/Fintiv

Patent Owner argues we should exercise our discretion under 35 U.S.C. § 314(a) to deny institution of *inter partes* review in view of the parallel district court proceeding. Prelim. Resp. 41–53. Petitioner disagrees. Pet. 71–75. We address the parties' arguments regarding discretionary denial below.

Under Section 314(a), the Director has discretion to deny institution. *See* 35 U.S.C. § 314(a) (stating "[t]he Director *may not* authorize an inter partes review to be instituted unless the Director determines that the information presented in the petition . . . shows that there is a reasonable likelihood that the petitioner would prevail with respect to at least 1 of the claims challenged in the petition") (emphasis added); *SAS Inst. Inc. v. Iancu*,

138 S. Ct. 1348, 1356 (2018) ("[Section] 314(a) invests the Director with discretion on the question whether to institute review." (emphasis omitted)); *Cuozzo Speed Techs., LLC v. Lee*, 136 S. Ct. 2131, 2140 (2016) ("[T]he agency's decision to deny a petition is a matter committed to the Patent Office's discretion."); *Harmonic Inc. v. Avid Tech, Inc.*, 815 F.3d 1356, 1367 (Fed. Cir. 2016) ("[T]he PTO is permitted, but never compelled, to institute an IPR proceeding.").

In determining whether to exercise this discretion based on a related litigation, the Board assesses all relevant circumstances, including the merits, to balance considerations such as system efficiency, fairness, and patent quality. *See Apple Inc. v. Fintiv, Inc.*, IPR2020-00019, Paper 11 (PTAB Mar. 20, 2020) (precedential) ("*Fintiv*"); *NHK Spring Co. v. Intri-Plex Techs., Inc.*, IPR2018-00752, Paper 8 at 19–20 (PTAB Sept. 12, 2018) (precedential). We consider six factors as part of this balanced assessment when determining whether to use our discretion to deny institution:

> 1. whether the court granted a stay or evidence exists that one may be granted if a proceeding is instituted;
>
> 2. proximity of the court's trial date to the Board's projected statutory deadline for a final written decision;
>
> 3. investment in the parallel proceeding by the court and the parties;
>
> 4. overlap between issues raised in the petition and in the parallel proceeding;
>
> 5. whether the petitioner and the defendant in the parallel proceeding are the same party; and
>
> 6. other circumstances that impact the Board's exercise of discretion, including the merits.

Fintiv, Paper 11 at 5–6. In evaluating these factors, we "take[] a holistic view of whether efficiency and integrity of the system are best served by denying or instituting review." *Id.* at 6.

On June 21, 2022, the Director issued an Interim Procedure for Discretionary Denials in AIA Post-Grant Proceedings with Parallel District Court Litigation ("Interim *Fintiv* Guidance").[7] The Interim *Fintiv* Guidance provides "several clarifications" to "the PTAB's current application of *Fintiv* to discretionary denial where there is parallel litigation" in response to comments received from stakeholders in response to a Request for Comments. Interim *Fintiv* Guidance 2.

We now apply the six factors to the facts and circumstances present here.

1. Fintiv Factor 1: Stay in the Parallel Proceeding

Under the first *Fintiv* factor, we consider "whether the court granted a stay or evidence exists that one may be granted if a proceeding is instituted." *Fintiv*, Paper 11 at 6. Patent Owner contends that this factor weighs in favor of denial because "Petitioner[] filed a motion to stay in the district court just two days before the filing of this preliminary response," and "the "motion has not been granted as of the date of this filing, and there is no evidence that it would be granted." Prelim. Resp. 42. Patent Owner also asserts that prior decisions by the district judge suggest that Petitioner's motion to stay is unlikely to be granted. *Id.* at 42–43.

---

[7] The Interim *Fintiv* Guidance is available at https://www.uspto.gov/sites/default/files/documents/interim_proc_discretionary_denials_aia_parallel_district_court_litigation_memo_20220621_.pdf.

We will not attempt to predict how the district court in the parallel district court proceeding will decide Petitioner's motion to stay because the determination of whether or not to stay any individual case, including the related one, is based on a variety of circumstances and facts beyond our control and to which the Board is not privy. *Sand Revolution II, LLC v. Cont'l Intermodal Grp. - Trucking LLC*, IPR2019-01393, Paper 24 at 7 (PTAB June 16, 2020) (informative) ("*Sand Revolution*"). Accordingly, we find that factor 1 is neutral.

2. Fintiv Factor 2: Trial Date in the Parallel Proceeding

Under the second *Fintiv* factor, we consider the "proximity of the court's trial date to the Board's projected statutory deadline for a final written decision." *Fintiv*, Paper 11 at 6. Patent Owner states that the trial date in the parallel district court case is set for June 23, 2025, which is three months before the September 27, 2025 deadline for a final written decision in this case. Prelim. Resp. 44. Patent Owner also argues that the trial date in this case is approximately 21 months after filing of the complaint, which is in line with the 21.4 month statistics for the average time to trial in the Eastern District of Texas for the 12-month period ending December 31, 2023. *Id.* at 44–45 (citing Ex. 2004, 2; Ex. 1010, 1).

Because the current trial date in the parallel district court proceeding is relatively close in time to the deadline for a final written decision in this case, it is uncertain which will occur first. However, because the district court's projected trial date is earlier than the deadline for our final written decision, we find that factor 2 weighs slightly in favor of exercising discretion to deny institution.

3. Fintiv Factor 3: Investment by the Court and the Parties in the Parallel Proceeding

Under the third *Fintiv* factor, we consider the "investment in the parallel proceeding by the court and the parties." *Fintiv*, Paper 11 at 6. According to the docket control order from the district court submitted by Patent Owner, claim construction briefing will occur from September 26 to November 5, 2024, the claim construction hearing is set for November 26, 2024, fact discovery is set to close on January 15, 2025, and expert discovery is set to close on March 10, 2025. Ex. 1010 (docket control order). Thus, the majority of claim construction briefing, the claim construction hearing, the close of fact discovery, and the close of expert discovery will all occur after our institution date in this case, and there is no indication that the district court will have spent significant resources on unpatentability issues in the case by the time of institution. Because of the significant investment that remains in the parallel district court proceeding, we find that factor 3 weighs against exercising discretion to deny institution.

4. Fintiv Factor 4: Overlap Between Issues Raised in the Petition and Parallel Proceeding

Under the fourth *Fintiv* factor, we consider the "overlap between issues raised in the petition and in the parallel proceeding." *Fintiv*, Paper 11 at 6. Here, Petitioner has stipulated that it this IPR is instituted, it will not pursue the same invalidity grounds in district court. Pet. 73; *see Sand Revolution*. Petitioner also contends that Patent Owner has only asserted a subset of the claims challenged in the present Petition in the parallel district court case. Pet. 73. Because of Petitioner's *Sand Revolution* stipulation, and the fact that the Petition challenges additional claims not at issue in the district court case, we find that this factor weighs in favor of institution.

5. Fintiv Factor 5: Whether Petitioner is the Defendant in the Parallel Proceeding

Under the fifth *Fintiv* factor, we consider "whether the petitioner and the defendant in the parallel proceeding are the same party." *Fintiv*, Paper 11 at 6. Here, Petitioner is also the defendant in the parallel district court case. Therefore, we find that factor 5 weighs slightly in favor of exercising discretion to deny institution.

6. Fintiv Factor 6: Other Considerations, Including the Merits

Under the sixth *Fintiv* factor, we consider "other circumstances that impact the Board's exercise of discretion, including the merits." *Fintiv*, Paper 11 at 6. As discussed below, we determine that Petitioner has shown a reasonable likelihood of unpatentability under both Grounds 1 and 2. Because, as discussed below, we find that factors 1–5 weigh in favor of institution, we need not determine whether Petitioner's case presents "compelling merits" for purposes of this Decision.

7. Conclusion

As noted above, we take "a holistic view of whether efficiency and integrity of the system are best served by denying or instituting review." *Fintiv*, Paper 11 at 6. Weighing all of the factors, we are not persuaded that the interests of efficiency and integrity of the system would be best served by invoking 35 U.S.C. § 314(a) to deny institution of a potentially meritorious petition, particularly because the parallel district court case is at a relatively early stage, the trial date is relatively close to the deadline for a final written decision in this case, Petitioner has filed a *Sand Revolution* stipulation, and there are differences in the claims challenged in both proceedings. Thus, based on the record before us, we determine that the facts of this case do not warrant discretionary denial.

III. CONCLUSION

After considering the evidence and arguments presented in the current record, we determine that Petitioner has demonstrated a reasonable likelihood of success in proving that at least one of the challenged claims of the ’802 patent is unpatentable. We therefore institute trial on all challenged claims and grounds raised in the Petition. *See PGS Geophysical AS v. Iancu*, 891 F.3d 1354, 1360 (Fed. Cir. 2018) (a decision whether to institute an *inter partes* review “require[s] a simple yes-or-no institution choice respecting a petition, embracing all challenges included in the petition”).

At this stage of the proceeding, we have not made a final determination as to the patentability of any challenged claim or as to the construction of any claim term.

IV. ORDER

In consideration of the foregoing, it is hereby:

ORDERED that, pursuant to 35 U.S.C. § 314(a), an *inter partes* review of claims 1–9 of the ’802 patent is instituted with respect to all grounds set forth in the Petition; and

FURTHER ORDERED that, pursuant to 35 U.S.C. § 314(c) and 37 C.F.R. § 42.4(b), *inter partes* review of the ’802 patent shall commence on the entry date of this Order, and notice is hereby given of the institution of a trial.

PETITIONER:

Patrick D. McPherson
Patrick Muldoon
DUANE MORRIS LLP
pdmcpherson@duanemorris.com
pcmuldoon@duanemorris.com

PATENT OWNER:

Kenneth J. Weatherwax
Parham Hendifar
LOWENSTEIN & WEATHERWAX LLP
weatherwax@lowensteinweatherwax.com
hendifar@lowensteinweatherwax.com

Reza Mirzaie
Amy E. Hayden
RUSS, AUGUST & KABAT
rmirzaie@raklaw.com
ahayden@raklaw.com