UNITED STATES DISTRICT COURT
EASTERN DISTRICT OF TEXAS
MARSHALL DIVISION

AX WIRELESS LLC, Plaintiff, v. DELL INC., et al, Defendant.	Case No. 2:22-cv-00277-JRG-RSP (LEAD CASE) JURY TRIAL DEMANDED
AX WIRELESS LLC, Plaintiff, v. HP INC., Defendant.	Case No. 2:22-cv-00279-JRG-RSP (MEMBER CASE) JURY TRIAL DEMANDED

AX WIRELESS
DISCLOSURE OF ASSERTED CLAIMS AND INFRINGEMENT CONTENTIONS
TO DELL

Pursuant to Local Patent Rules 3-1 and 3-2, and the Court's Scheduling Order (Dkt. 21), Plaintiff AX Wireless LLC ("AX Wireless") hereby provides its disclosure of asserted claims and infringement contentions, including by reference the attachments hereto and accompanying document production against Defendants Dell Inc. and Dell Technologies Inc. (collectively, "Dell" or "Defendants").

AX makes these disclosures based upon presently known and publicly available information.

AX Wireless has not completed its preparation of this matter for trial and has not received complete discovery from Defendants, particularly discovery of Defendants' confidential, proprietary, or non-public information and documents that describe the accused instrumentalities, or discovery on Defendants' past, discontinued, or other instrumentalities reasonably similar to the presently accused instrumentalities.

AX Wireless's investigations are ongoing and discovery is not yet complete. AX Wireless reserves the right to amend or supplement its asserted claims and infringement contentions, including the identification of infringed claims and accused instrumentalities.

Additionally, AX Wireless reserves the right to amend and further supplement its infringement contentions as any additional instrumentalities come into existence or become known.

I. DISCLOSURES

A. Asserted Claims

Pursuant to P.R. 3-1(a), AX Wireless presently identifies the following Asserted Patents and Claims:

(1) U.S. Patent No. 9,584,262 ("the '262 Patent"); claims 1-4, 8-12, 16-17, 21-28 and 32.

(2) U.S. Patent No. 9,614,566 ("the '566 Patent"); claims 1-6, 10-16, 20-21, 25-36 and 40.

(3) U.S. Patent No. 9,973,361 ("the '361 Patent"); claims 1-3, 5, 7 and 8.

(4) U.S. Patent No. 10,079,707 ("the '707 Patent"); claims 1-3, 5, 7-11 and 13.

(5) U.S. Patent No. 10,291,449 ("the '449 Patent"); claims 1-3, 5, 7-11 and 13.

(6) U.S. Patent No. 10,554,459 ("the '459 Patent"); claims 1-3, 5, 7-11 and 13.

(7) U.S. Patent No. 10,917,272 ("the '272 Patent"); claims 1-3, 5, 7-9, 11-13, 15 and 17-19.

(8) U.S. Patent No. 11,212,146 ("the '146 Patent"); claims 1-10.

AX Wireless reserves the right to amend this list of Asserted Patents and Claims as additional information becomes available to it.

B. Accused Instrumentalities

Pursuant to P.R. 3-1(b), AX Wireless presently identifies the following accused instrumentalities that infringe the Asserted Claims: Dell products that are configured to provide, implement, embody and/or support Wi-Fi 6 Functionality, including but not limited to smartphones, personal computers (PCs) (e.g., desktops and laptops), printers, tablets, networking devices, Internet of things ("IoT") devices, appliances, and other consumer and home electronics ("Accused Instrumentalities").

Wi-Fi 6 Functionality refers to the technical functionalities as illustrated in, but not limited by, the 802.11ax standard promulgated by the Institute of Electrical and Electronics Engineers (IEEE) ("Wi-Fi 6 Standard"). The Wi-Fi 6 Standard is illustrative of one configuration of the technical specifications provided, implemented, embodied and/or supported by the Accused Instrumentalities, whether or not the Accused Instrumentalities are standard compliant.

Certain features and components of the Accused Instrumentalities are not publicly available and not determinable from simple inspection. During discovery, AX Wireless anticipates that Defendants will provide a definitive list of their Accused Instrumentalities and their components, configurations, and implementations. Presently, AX Wireless relies herein on publicly reported identification of the features and components of the Accused Instrumentalities.

For example, Defendants are members, contributors and/or participants of the Wi-Fi Alliance.[1] According to the Wi-Fi Alliance web-site:

> Wi-Fi Alliance® is the worldwide network of companies that brings you Wi-Fi®, one of the world's most valued communications technologies. Our vision is to connect everyone and everything, everywhere.[2]

The Wi-Fi Alliance provides industry and/or standard certifications:

> Wi-Fi CERTIFIED™ is an internationally recognized seal of approval for products indicating that they have met industry-agreed standards for interoperability, security, and a range of application specific protocols.
>
> Certification means that a product has been tested in a variety of ways to validate interoperability with other Wi-Fi CERTIFIED equipment operating in the same frequency band.[3]

The certifications provided by the Wi-Fi Alliance include "Wi-Fi CERTIFIED 6."

According to the Wi-Fi Alliance web-site:

> Wi-Fi CERTIFIED 6

[1] https://www.wi-fi.org/ and https://www.wi-fi.org/membership/member-companies.

[2] https://www.wi-fi.org/who-we-are.

[3] https://www.wi-fi.org/certification.

Wi-Fi CERTIFIED 6™, the industry certification program based on the IEEE 802.11ax standard, provides the capacity, efficiency, coverage, and performance required by users today in the most demanding Wi-Fi® environments. Emphasizing quality connectivity in locations with hundreds or thousands of connected devices such as stadiums and other public venues, as well as corporate networks utilizing time sensitive, high bandwidth applications, Wi-Fi CERTIFIED 6 networks ensure each connected device performs at an optimum level. Wi-Fi CERTIFIED 6 devices meet the highest standards for security and interoperability, and enable lower battery consumption, making it a solid choice for any environment, including the Internet of Things (IoT).

Key benefits of Wi-Fi CERTIFIED 6 technology include:

- Higher data rates
- Increased capacity
- Performance in environments with many connected devices
- Improved power efficiency

Wi-Fi CERTIFIED 6 provides the foundation for a host of current and emerging uses from streaming ultra high-definition movies, to mission-critical business applications requiring high bandwidth and low latency, to staying connected and productive while traversing large, congested networks in airports and train stations.

Wi-Fi 6E extends Wi-Fi CERTIFIED 6 into 6 GHz

Wi-Fi operation in the 6 GHz frequency band enables Wi-Fi to continue delivering positive experiences for the most bandwidth intensive applications. Wi Fi 6E certification as part of Wi-Fi CERTIFIED 6 offers the features and capabilities of Wi-Fi 6, extended to the 6 GHz band. Several nations around the globe are making the 6 GHz band available for unlicensed use, and Wi-Fi CERTIFIED 6 provides worldwide interoperability certification for devices in these markets.[4]

[4] https://www.wi-fi.org/discover-wi-fi/wi-fi-certified-6.

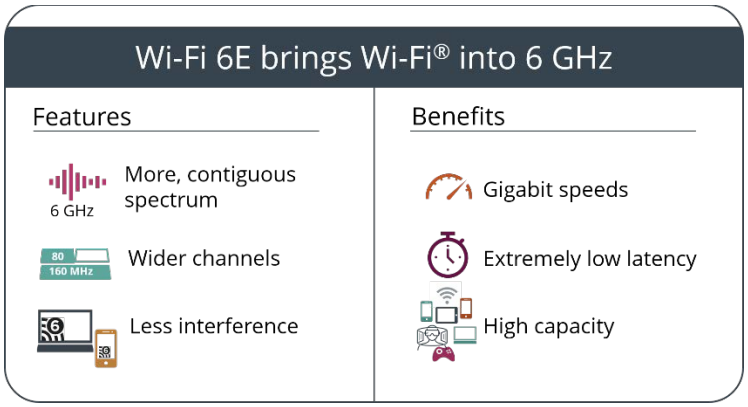

As a further example, Defendants advertise products as utilizing a Wi-Fi 6 or 802.11ax transceiver, such as a wireless card or modem, e.g., Wireless Intel Dual Band Wi-Fi 6 AX211 2x2 802.11ax 160MHz wireless card, and/or as Wi-Fi CERTIFIED 6.[5] Defendants promote their products as Wi-Fi 6 compatible and/or compliant, and tout the benefits of Wi-Fi 6 for those products.

On information and belief, the Accused Instrumentalities include but are not limited to the products identified in Appendix A.

C. Claim Charts

Pursuant to P.R. 3-1(c), AX Wireless provides claim charts (Appendices B-I), which are incorporated by reference as if fully set forth herein.

These charts are exemplary and not limiting, and address the Asserted Patents and Claims and Accused Instrumentalities without the benefit of full discovery. Citations included in the charts are exemplary only, and should not be construed as limiting.

---

[5] *See, e.g.*, https://www.dell.com/en-us/shop/dell-laptops/sr/laptops/wi-fi-6?appliedRefinements=37766 (search results for laptops filtered by "Wi-Fi 6"); https://www.dell.com/en-us/shop/desktop-computers/sr/desktops/wi-fi-6?appliedRefinements=38804 (search results for desktops filtered by "Wi-Fi 6"); and https://www.dell.com/en-us/shop/dell-laptops/latitude-3520-laptop/spd/latitude-15-3520-laptop/s061l3520us (showing "Intel Dual Band Wi-Fi 6 AX201 2x2 802.11ax 160MHz + Bluetooth 5.1" for "Wireless" for the Latitude 3520 Laptop).

The Accused Instrumentalities utilize the same or substantially similar technology as presented in these claim charts, such that they are representative of the manner of infringement across the Accused Instrumentalities. On information and belief, each Accused Instrumentality is configured to comply with the technical standards required for WiFi 6, and identification of where each element of each asserted claim is found within the WiFi 6 standard is substantially identical to where those elements can be found in each Accused Instrumentality. The comparisons made in these contentions are representative of, and apply to, all of the Accused Instrumentalities and their configurations and implementations.

For the reasons defined and described in more detail in these claim charts, the Accused Instrumentalities infringe the Asserted Claims.

AX Wireless believes that the Accused Instrumentalities may be provided in a variety of configurations or combinations.

Through reasonable investigation of presently known and publicly available information, including Defendants' own public websites, disclosures, advertisements, patents, and patent applications, AX Wireless has identified what it believes to be the current configurations or combinations of the Accused Instrumentalities. However, AX Wireless anticipates that the full scope of configurations or combinations of the Accused Instrumentalities will be found through subsequent discovery from Defendants and third parties.

In the attached charts, for convenience, AX Wireless has subdivided each Asserted Claim to better explicate where each claim element or step may be found within the Accused Instrumentalities. These subdivisions should not be taken as an indication of the boundaries of claim elements or steps with respect to the doctrine of equivalents or any other issue. Furthermore, the Accused Instrumentalities may infringe the Asserted Patents and Claims in

multiple ways. AX Wireless reserves the right to provide alternate claim mapping, and to amend or supplement its chart.

D. Contentions

Pursuant to 35 U.S.C. §§ 271(a), (b), and/or (c), AX Wireless contends that Defendants directly infringe the Asserted Patents and Claims by making, using, selling, offering to sell, and/or importing Accused Instrumentalities in the United States, the State of Texas, and the Eastern District of Texas.

AX Wireless also contends that Defendants indirectly infringe by actively, knowingly, and/or intentionally inducing or contributing to the direct infringement of the Asserted Patents and Claims, literally, under the doctrine of equivalents, and/or jointly, in the United States, the State of Texas, and the Eastern District of Texas.

Such indirect infringement includes Defendants' inducement—through affirmative acts—of each other Defendant, customers, and third parties, and the customers of each other Defendant and third parties, to directly infringe the Asserted Patents under 35 U.S.C. § 271(b) by making, using, selling, offering for sale, and/or importing in the United States the Accused Instrumentalities.

Defendants had knowledge of the Asserted Patents and their infringement since at least January 27, 2021, when AX Wireless notified Defendants that their products infringed the Asserted Patents. Defendants specifically intended and was aware that the ordinary and customary use of the Accused Instrumentalities would infringe one or more of the Asserted Patents and Claims.

The affirmative acts of inducement by Defendants include, but are not limited to, any one or a combination of encouraging and/or facilitating third party infringement through the advertisement, marketing, and dissemination of the Accused Instrumentalities and their

components, including their customers; and creating and publishing promotional and marketing materials, supporting materials, product manuals, and/or technical support and information relating to the Accused Instrumentalities, which describe, train, and instruct users on the implementation of the Accused Instrumentalities and their components, including but not limited to the use of WiFi 6.

Defendants knew that the induced conduct would constitute infringement, and intended said infringement at the time of committing the aforementioned acts, such that those acts and conduct have been and continue to be committed with the specific intent to induce infringement, or to deliberately avoid learning of the infringing circumstances at the time these acts were committed, so as to be willfully blind to the infringement they induced.

Such indirect infringement also includes Defendants' contributing to the direct infringement of the Asserted Patents under 35 U.S.C. § 271(c) by each other Defendant, customers, and third parties, and the customers of each other Defendant and third parties, by making or selling parts, components, or intermediate products to each other Defendant, customers, or third parties that, once assembled, infringe upon the Asserted Patents by the sale and/or use of the assembled products. The accused Wi-Fi functionality has no substantial non-infringing uses, and embody the heart of the patented invention. Any alleged non-infringing uses would be unusual, impractical, occasional, aberrant, or experimental.

Defendants took active steps to encourage end users to use and operate the Accused Instrumentalities, including but not limited to Wi-Fi 6, despite knowing of the Asserted Patents in the United States, in a manner they knew directly infringes each element of at least one claim of each of the Asserted Patents.

Further, Defendants provided product manuals and other technical information that cause their customers and other third parties to use and to operate the Accused Instrumentalities for their ordinary and customary use, such that Defendants' customers and other third parties have directly infringed the Asserted Patents, through the normal and customary use of the Accused Instrumentalities.

For example, Defendants knowingly promote the Wi-Fi 6 functionality of their laptop and desktop products on their web-site and other advertising, for sale of their products to customers and to induce such purchasers to use the Wi-Fi 6 functionality to wirelessly connect to local area networks.

Therefore, Defendants are liable for infringement of the Asserted Patents and that infringement has been and continues to be willful in nature.

Based on publicly available information, and with AX Wireless's investigation and discovery ongoing, AX Wireless presently contends pursuant to P.R. 3-1(d) that each element, step, and limitation of each Asserted Claim is literally present, met, or implemented in and/or by the Accused Instrumentalities. AX Wireless also contends that Defendants infringe under the Doctrine of Equivalents, as set forth in the aforementioned claim charts. To date, Defendants have not specifically identified which claim elements and limitations they contend are not literally met by the Accused Instrumentalities. Therefore, each claim element and limitation is literally met by the Accused Instrumentalities.

Should Defendants contend that any element, step, or limitation is literally absent in an Accused Instrumentality, AX Wireless contends and reserves the right to prove that at least the equivalent of the allegedly missing element, step, or limitation is nevertheless present in the

Accused Instrumentality, and that the Accused Instrumentality thus at least infringes under the doctrine of equivalents.

Because AX Wireless discloses these contentions before the commencement of discovery, it has not had the benefit of any internal, proprietary or confidential technical information and data of Defendants and their Accused Instrumentalities. Ax Wireless's contentions are based on public information, which comprises of the statements, admissions and advertisements by Defendants that the Accused Products comply and implement the technical specifications of the Wi-Fi 6 Standard, including those specifications identified herein. If Defendants contend and produce documentation showing that the Accused Products implement technical specifications different from those set forth in the Wi-Fi 6 Standard, AX Wireless will be able to set forth additional scope of equivalents, and therefore reserves the right to amend, supplement or revise its contentions, including as to contentions under the Doctrine of Equivalents.

To the extent that Defendants contend that the preamble of the Asserted Claims is limiting, AX Wireless contends and reserves the right to prove that the limitation is nevertheless present in the Accused Instrumentalities, and that the Accused Instrumentalities thus infringes.

The claim charts provided by AX Wireless applies to its claims for direct and indirect, literal and doctrine of equivalents infringement.

E. Priority Dates

The Asserted Patents all claim priority to provisional U.S. Patent Application No. 61/235,909 filed on August 21, 2009.

F. Plaintiff's Instrumentalities Practicing the Claimed Invention

AX Wireless is not presently asserting that any of its products practice, incorporate, or reflect the Asserted Claims of the Asserted Patents.

II. DOCUMENT PRODUCTION

AX Wireless is not presently aware of or in possession of any documentation relating to any discussions with, disclosures to, or other manners of providing to a third party, or sales of or offers to sell, the claimed invention prior to the application date of the Asserted Patents, pursuant to P.R. 3-2(a). AX Wireless reserves the right to amend or supplement this disclosure based on further discovery.

AX Wireless is not presently aware of or in possession of any documentation relating to the conception, reduction to practice, design, and development of each claimed invention, which were created on or before August 21, 2009, pursuant to P.R. 3-2(b). AX Wireless reserves the right to amend or supplement this disclosure based on further discovery.

Pursuant to P.R. 3-2(c), AX Wireless identifies documents bearing the identification numbers AXW_0000001 -AXW_0003601.

Date: November 3, 2022

Respectfully submitted,

/s/ Andrew Y. Choung

Elizabeth L. DeRieux
Email: ederieux@capshawlaw.com
CAPSHAW DERIEUX, LLP
114 E. Commerce Ave.
Gladewater, Texas 75647
(903) 845-5770

Andrew Y. Choung (admitted in E.D. Tex.)
Email: achoung@nixonpeabody.com
Jennifer Hayes (*pro hac vice*)
Email: jenhayes@nixonpeabody.com
Joshua J. Pollack (admitted in E.D. Tex.)
Email: jpollack@nixonpeabody.com
NIXON PEABODY LLP
300 S. Grand Avenue, Suite 4100
Los Angeles, CA 90071
(213) 629-6000

Brendan O'Callaghan (admitted in E.D. Tex.)
Email: bocallaghan@nixonpeabody.com
Nixon Peabody LLP
799 9th Street NW, Suite 500
Washington, DC 20001-5327
Telephone: (202) 585-8000

Attorneys for Plaintiff AX Wireless LLC

CERTIFICATE OF SERVICE

I hereby certify that the foregoing document is being served on counsel for the Dell defendants via electronic mail on this November 3, 2022.

/s/ Andrew Y. Choung

APPENDIX A
Dell Accused Instrumentalities

Accused Instrumentality	Wi-Fi 6 / 802.11ax
Alienware Aurora R12	Intel Wi-Fi 6 AX201 or Intel Killer Wi-Fi 6 AX1650
Alienware Aurora R13	Intel Killer Wi-Fi 6 AX1675 (2x2)
Alienware Aurora Ryzen Edition R10	Intel Killer Wi-Fi 6 AX1650 (2x2)
Alienware Aurora Ryzen Edition R14	MediaTek Wi-Fi 6 MT7921
Alienware m15 R5 Ryzen	Intel Killer Wi-Fi 6 AX1675
Alienware m15 R6	Intel Killer Wi-Fi 6 AX1650
Alienware m15 R7	Intel Killer Wi-Fi 6 (6E* Pre-certified) AX1675 MediaTek Wi-Fi 6 MT7921 2x2
Alienware m17 R5	MediaTek Wi-Fi 6 MT7921 2x2
Alienware m17 R7	MediaTek Wi-Fi 6 MT7921 2x2
Alienware x14	Intel Wi-Fi 6E AX211, 2x2 MIMO
Alienware x15	Intel Killer Wi-Fi 6 AX1675 (2x2)
Alienware x15 R2	Intel Killer Wi-Fi 6 (6E* Pre-certified) AX1675
Alienware x17	Intel Killer Wi-Fi 6 AX1675
Alienware x17 R2	Intel Killer Wi-Fi 6 (6E* Pre-certified) AX1675
G15	Intel Wi-Fi 6 AX201 (2x2) Wi-Fi
G15 Ryzen Edition	Intel Killer Wi-Fi 6 AX1650 (2x2)
G15 Special Edition	Intel Killer Wi-Fi 6 AX1650 (2x2)
Inspiron 13	Intel Wi-Fi 6 2x2 (Gig+)
Inspiron 14	Intel Wi-Fi 6 2x2 (Gig+) MediaTek Wi-Fi 6 MT7921 2x2
Inspiron 14 Plus	Intel Wi-Fi 6E (6GHz) AX211 2x2
Inspiron 14 2-in-1	Intel Wi-Fi 6E (6GHz) AX211 2x2 MediaTek Wi-Fi 6 MT7921 2x2
Inspiron 15	Intel Wi-Fi 6 2x2 (Gig+)
Inspiron 15 2-in-1	Intel Wi-Fi 6 2x2 (Gig+)
Inspiron 16	Intel Wi-Fi 6E (6GHz) AX211 2x2 MediaTek Wi-Fi 6 MT7921 2x2

APPENDIX A
Dell Accused Instrumentalities

Accused Instrumentality	Wi-Fi 6 / 802.11ax
Inspiron 16 Plus	Intel Wi-Fi 6E (6GHz) AX211 2x2
Inspiron 16 2-in-1	Intel Wi-Fi 6E (6GHz) AX211 2x2
Inspiron 17 2-in-1	Intel Wi-Fi 6 2x2 (Gig+)
Inspiron 24 5000 All-in-One	Intel Wi-Fi 6E (6GHz) AX211 2x2 MediaTek Wi-Fi 6 MT7921 2x2
Inspiron 24 5000 Touch All-in-One	Intel Wi-Fi 6E (6GHz) AX211 2x2 MediaTek Wi-Fi 6 MT7921 2x2
Inspiron 27 7000 All-in-One	Intel Wi-Fi 6E (6GHz) AX211 2x2
Inspiron 27 7000 Touch All-in-One	Intel Wi-Fi 6E (6GHz) AX211 2x2
Inspiron Desktop	Intel Wi-Fi 6 2x2 (Gig+)
Latitude 3120	Intel Wi-Fi 6 AX201
Latitude 3120 2-in-1	Intel Wi-Fi 6 AX201
Latitude 3320	Intel Wi-Fi 6 AX201
Latitude 3330	Intel Wi-Fi 6 AX201
Latitude 3330 2-in-1	Intel Wi-Fi 6 AX201
Latitude 3420	Intel Dual Band Wi-Fi 6 AX201
Latitude 3520	Intel Wi-Fi 6 AX201
Latitude 5320	Intel Wi-Fi 6 AX201
Latitude 5320 2-in-1	Intel Wi-Fi 6 AX201
Latitude 5330	Intel Wi-Fi 6E AX211
Latitude 5330 2-in-1	Intel Wi-Fi 6E AX211
Latitude 5420	Intel Wi-Fi 6 AX201
Latitude 5421	Intel Wi-Fi 6 AX201 or Intel Wi-Fi 6E AX210
Latitude 5430	Intel Wi-Fi 6E AX211
Latitude 5431	Intel Wi-Fi 6E AX211
Latitude 5520	Intel Wi-Fi 6 AX201
Latitude 5521	Intel Wi-Fi 6 AX201
Latitude 5530	Intel Wi-Fi 6E AX211

APPENDIX A
Dell Accused Instrumentalities

Accused Instrumentality	Wi-Fi 6 / 802.11ax
Latitude 5531	Intel Wi-Fi 6E AX211
Latitude 7220 Rugged Extreme	Intel Wi-Fi 6 AX200
Latitude 7320	Intel Wi-Fi 6 AX201
Latitude 7320 2-in-1	Intel Wi-Fi 6 AX201
Latitude 7320 Detachable	Intel Wi-Fi 6 AX201
Latitude 7330	Intel Wi-Fi 6E AX211
Latitude 7330 2-in-1	Intel Wi-Fi 6E AX211
Latitude 7420	Intel Wi-Fi 6 AX201
Latitude 7420 2-in-1	Intel Wi-Fi 6 AX201
Latitude 7430	Intel Wi-Fi 6E AX211
Latitude 7430 2-in-1	Intel Wi-Fi 6E AX211
Latitude 7520	Intel Wi-Fi 6 AX201
Latitude 7530	Intel Wi-Fi 6E AX211
Latitude 9330	Intel Wi-Fi 6E AX211
Latitude 9420	Intel Wi-Fi 6E AX210
Latitude 9420 2-in-1	Intel Wi-Fi 6E AX210
Latitude 9430	Intel Wi-Fi 6E AX211
Latitude 9430 2-in-1	Intel Wi-Fi 6E AX211
Latitude 9520	Intel Wi-Fi 6 AX201
Latitude 9520 2-in-1	Intel Wi-Fi 6 AX201
OptiPlex 3080 Micro	Intel Wi-Fi 6 AX200
OptiPlex 3090 MFF	Intel Wi-Fi 6 AX201
OptiPlex 3090 Micro	Intel Wi-Fi 6 AX201
OptiPlex 3090 Ultra	Qualcomm QCA61x4A Dual-band 2x2
OptiPlex 3280 All-in-One	Intel Wi-Fi 6 AX200
OptiPlex 5090 Micro	Intel Wi-Fi 6 AX201
OptiPlex 5490 All-in-One	Intel Wi-Fi 6 AX201

APPENDIX A
Dell Accused Instrumentalities

Accused Instrumentality	Wi-Fi 6 / 802.11ax
OptiPlex 7080 Micro for Large Microsoft Teams Room Bundle	Intel Wi-Fi 6 AX201
OptiPlex 7090 Micro	Intel Wi-Fi 6 AX201
OptiPlex 7090 Ultra	Intel Wi-Fi 6 AX201
OptiPlex 7090 Ultra AIO Bundle	Intel Wi-Fi 6 AX201 Qualcomm QCA61x4A Dual-band 2x2
OptiPlex 7490 All-in-One	Intel Wi-Fi 6 AX201
Precision 3450 Small Form Factor Workstation	Intel Wi-Fi 6 AX201
Precision 3470 Workstation	Intel Wi-Fi 6E AX211
Precision 3560 Workstation	Intel Wi-Fi 6 AX201 Intel Wi-Fi 6E AX210
Precision 3561 Workstation	Intel Wi-Fi 6 AX201
Precision 3570 Workstation	Intel Wi-Fi 6E AX211
Precision 3571 Workstation	Intel Wi-Fi 6E AX211
Precision 3650 Tower Workstation	Intel Wi-Fi 6 AX210
Precision 5470 Workstation	Intel Wi-Fi 6E AX211
Precision 5560 Workstation	Intel Wi-Fi 6 AX201
Precision 5570 Workstation	Intel Wi-Fi 6E AX211
Precision 5760 Workstation	Intel Wi-Fi 6 AX201
Precision 5770 Workstation	Intel Wi-Fi 6E AX211
Precision 7560 Data Science Workstation	
Precision 7560 Workstation	Intel Wi-Fi 6E AX210
Precision 7760 Data Science Workstation	Intel Wi-Fi 6E AX210 Intel Wi-Fi 6 AX210
Precision 7760 Workstation	Intel Wi-Fi 6E AX210
Vostro 5310	Intel Wi-Fi 6 2x2 (Gig+)
Vostro 5410	Intel Wi-Fi 6 2x2 (Gig+)
Vostro 5620	Intel Wi-Fi 6 2x2 (Gig+)
Vostro 7620	Intel Wi-Fi 6E AX211

APPENDIX A
Dell Accused Instrumentalities

Accused Instrumentality	Wi-Fi 6 / 802.11ax
XPS 13	Intel Killer Wi-Fi 6 AX1650
XPS 13 Developer Edition	
XPS 13 Plus	Intel Killer Wi-Fi 6 AX1675
XPS 13 Plus Developer Edition	Intel Killer Wi-Fi 6 AX1675
XPS 13 Touch	Intel Killer Wi-Fi 6 AX1650
XPS 15	Intel Killer Wi-Fi 6 AX1675
XPS 15 Touch	Intel Killer Wi-Fi 6 AX1650
XPS 17	Intel Killer Wi-Fi 6 AX1675
XPS Desktop	Intel Killer Wi-Fi 6 AX1675

Appendix B
Claim Chart for U.S. Patent No. 9,973,361

Claim 1	Wi-Fi 6 Accused Instrumentalities
A wireless OFDM (Orthogonal Frequency Division Multiplexing) transceiver comprising:	The Accused Instrumentalities comprise a wireless OFDM (Orthogonal Frequency Division Multiplexing) transceiver that comprises the following technical elements and limitations, as described in the Wi-Fi 6 Standard. For example, devices that comply with the IEEE 802.11ax standard ("Wi-Fi 6") comprise a wireless OFDM (Orthogonal Frequency Division Multiplexing) transceiver. The citations herein to the Wi-Fi 6 standard are further illustrative of the technical specifications implemented in and/or embodied by the Accused Instrumentalities and applicable whether or not the Accused Instrumentalities are standard compliant. For example, Wi-Fi 6 devices comprise a wireless OFDM transceiver that is capable of transmitting and receiving ("transceiving") physical layer protocol data units (PPDUs). This is indicated below:[1]

[1] IEEE Std 802.11ax-2021, Sec. 27.1.1.

Appendix B
Claim Chart for U.S. Patent No. 9,973,361

Claim 1	Wi-Fi 6 Accused Instrumentalities
	27. High-efficiency (HE) PHY specification **27.1 Introduction** **27.1.1 Introduction to the HE PHY** Clause 27 specifies the PHY entity for a high-efficiency (HE) orthogonal frequency division multiplexing (OFDM) system. In addition to the requirements in Clause 27, an HE STA shall be capable of transmitting and receiving PPDUs that are compliant with the mandatory requirements of the following PHY specifications: — Clause 19 and Clause 21 if the HE STA supports an operating channel width greater than or equal to 80 MHz and is operating in the 5 GHz band. — Clause 19 and Clause 21 transmission and reception on 20 MHz channel width (see 26.17.1) if the HE STA is a 20 MHz-only non-AP HE STA and is operating in the 5 GHz band. — Clause 19 if the HE STA is operating in the 2.4 GHz band. — Clause 17 if the HE STA is operating in the 6 GHz band. It is anticipated that discovery will provide further details of the manner of infringement of the Accused Instrumentalities. Upon information and belief, AX Wireless contends that these infringement contentions are equally applicable to all examples, aspects, applications, configurations, embodiments and instances of Defendants' Wi-Fi 6 devices.
a wireless OFDM communications transmitter operable to generate a first packet type comprising a first header field, wherein the first header field comprises two parts, a first part comprising a first set of header bits of the	The Accused Instrumentalities comprise a wireless OFDM communications transmitter operable to generate a first packet type comprising a first header field, wherein the first header field comprises two parts, a first part comprising a first set of header bits of the first header field and a second part comprising a second set of header bits of the first header field, wherein the first set of header bits of the first header field is different than the second set of header bits of the first header field. For example, Wi-Fi 6 devices comprise a wireless OFDM communications transmitter operable to generate a first packet type comprising a first header field, wherein the first header field comprises

Appendix B
Claim Chart for U.S. Patent No. 9,973,361

Claim 1	Wi-Fi 6 Accused Instrumentalities
first header field and a second part comprising a second set of header bits of the first header field, wherein the first set of header bits of the first header field is different than the second set of header bits of the first header field; and	two parts, a first part comprising a first set of header bits of the first header field and a second part comprising a second set of header bits of the first header field, wherein the first set of header bits of the first header field is different than the second set of header bits of the first header field. Wi-Fi 6 devices comprise a wireless OFDM communications transmitter operable to generate a first packet type comprising a first header field. For example, Wi-Fi 6 devices comprise a high-efficiency (HE) station (STA) that can transmit the high-efficiency single user physical layer protocol data unit (HE SU PPDU) format, among other PPDU formats:[2] The HE PHY provides support for midambles. Midambles facilitate updating of the channel estimate during HE PPDU reception and might be of use in high mobility scenarios that often result in significant variations of the wireless channel over the duration of a PPDU. An HE STA shall support the following features: — Transmission and reception of an HE SU PPDU that consists of a single RU spanning the entire PPDU bandwidth. See also:[3] **high-efficiency (HE) single-user (SU) physical layer (PHY) protocol data unit (PPDU) (HE SU PPDU):** A PPDU transmitted with HE SU PPDU format. This PPDU carries a single PHY service data unit (PSDU). The HE SU PPDU is a first packet type comprising a first header field. For example, the HE SU PPDU comprises the HE-SIG-A field. This is indicated below:[4]

[2] IEEE Std 802.11ax-2021, Sec. 27.1.1.

[3] IEEE Std 802.11ax-2021, Sec. 3.2.

[4] IEEE Std 802.11ax-2021, Sec. 27.3.4.

Appendix B
Claim Chart for U.S. Patent No. 9,973,361

Claim 1	Wi-Fi 6 Accused Instrumentalities
	27.3.4 HE PPDU formats Four HE PPDU formats are defined: HE SU PPDU, HE MU PPDU, HE ER SU PPDU, and HE TB PPDU. The HE sounding NDP is a variant of the HE SU PPDU and defined in 27.3.17. The HE TB feedback NDP is a variant of the HE TB PPDU and defined in 27.3.18. NOTE—The HE ER SU PPDU is not a variant of the HE SU PPDU. Requirements related to HE SU PPDUs and HE ER SU PPDUs are specified separately. The format of the HE SU PPDU is defined as in Figure 27-8. This PPDU format is used for SU transmission, and in this format, the HE-SIG-A field is not repeated. 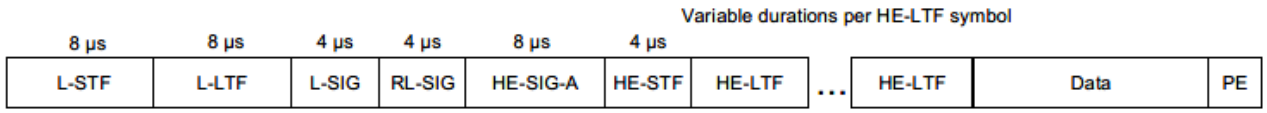 **Figure 27-8—HE SU PPDU format** See also:[5]

[5] IEEE Std 802.11ax-2021, Sec. 27.3.4.

Appendix B
Claim Chart for U.S. Patent No. 9,973,361

<table>
<tr><th>Claim 1</th><th>Wi-Fi 6 Accused Instrumentalities</th></tr>
<tr><td></td><td>
The fields of the HE PPDU formats are summarized in Table 27-11.

Table 27-11—HE PPDU fields

<table>
<tr><th>Field</th><th>Description</th></tr>
<tr><td>L-STF</td><td>Non-HT Short Training field</td></tr>
<tr><td>L-LTF</td><td>Non-HT Long Training field</td></tr>
<tr><td>L-SIG</td><td>Non-HT SIGNAL field</td></tr>
<tr><td>RL-SIG</td><td>Repeated Non-HT SIGNAL field</td></tr>
<tr><td>HE-SIG-A</td><td>HE SIGNAL A field</td></tr>
<tr><td>HE-SIG-B</td><td>HE SIGNAL B field</td></tr>
<tr><td>HE-STF</td><td>HE Short Training field</td></tr>
<tr><td>HE-LTF</td><td>HE Long Training field</td></tr>
<tr><td>Data</td><td>The Data field carrying the PSDU(s)</td></tr>
<tr><td>PE</td><td>Packet extension field</td></tr>
</table>

The RL-SIG, HE-SIG-A, HE-STF, HE-LTF, and PE fields are present in all HE PPDU formats. The HE-SIG-B field is present only in the HE MU PPDU. The PE field is defined in 27.3.13.

The L-STF, L-LTF, L-SIG, RL-SIG, HE-SIG-A, and HE-SIG-B fields are referred to as *pre-HE modulated fields*, while the HE-STF, HE-LTF, Data, and PE fields are referred to as *HE modulated fields*.
</td></tr>
</table>

Claim 1	Wi-Fi 6 Accused Instrumentalities
	The first header field comprises two parts. For example, the HE-SIG-A field comprises two subfields, HE-SIG-A1 and HE-SIG-A2. This is indicated below:[6] **27.3.6.6 Construction of HE-SIG-A field** a) For an HE SU PPDU, HE MU PPDU, and HE TB PPDU, the HE-SIG-A field consists of two subfields, HE-SIG-A1 and HE-SIG-A2 as defined in 27.3.11.7, and is constructed as follows: 1) Obtain the HE-SIG-A field values from the TXVECTOR. Add the reserved bits, append the calculated CRC, and then append the N_{tail} tail bits as shown in 27.3.11.7. This results in 52 uncoded bits. 2) BCC encoder: Encode the data by a convolutional encoder at the rate $R = 1/2$ as described in 17.3.5.6. 3) BCC interleaver: Interleave as described in 27.3.12.8. 4) Constellation mapper: BPSK modulate the first 52 interleaved bits as described in 17.3.5.8 to form the first OFDM symbol of the HE-SIG-A field. BPSK modulate the second 52 interleaved bits to form the second OFDM symbol of the HE-SIG-A field. 5) Pilot insertion: Insert pilots as described in 17.3.5.9. 6) Duplicate and phase rotation: Duplicate the HE-SIG-A OFDM symbols over each occupied 20 MHz subchannel of the channel width. Apply the appropriate phase rotation for each occupied 20 MHz subchannel as described in 27.3.10 and 21.3.7.5. 7) CSD per STS: If the TXVECTOR parameter BEAM_CHANGE is 0, apply CSD per STS for each space-time stream and frequency segment as described in 27.3.11.2.2 before spatial mapping. 8) Spatial mapping: If the TXVECTOR parameter BEAM_CHANGE is 0, apply the A matrix and the Q matrix as described in 27.3.11.7.4. 9) IDFT: Compute the inverse discrete Fourier transform. 10) CSD per chain: If the TXVECTOR parameter BEAM_CHANGE is 1 or not present, apply CSD per chain for each transmit chain and frequency segment as described in 27.3.11.2.1. 11) GI and windowing: Prepend a GI ($T_{GI,\text{Pre-HE}}$), and apply windowing as described in 27.3.10. 12) Analog and RF: Upconvert the resulting complex baseband waveform associated with each transmit chain to an RF signal according to the center frequency of the desired channel and transmit. Refer to 27.3.10 and 27.3.11 for details.

[6] IEEE Std 802.11ax-2021, Sec. 27.3.6.6.

Claim 1	Wi-Fi 6 Accused Instrumentalities
	A first part comprises a first set of header bits of the first header field. For example, the HE-SIG-A1 subfield comprises a first set of header bits of HE-SIG-A. This is indicated below:[7]

27.3.11.7.2 Content

The HE-SIG-A field for an HE SU PPDU or an HE ER SU PPDU contains the fields listed in Table 27-18.

Table 27-18—HE-SIG-A field of an HE SU PPDU and HE ER SU PPDU

Bit	Field	Number of bits	Description
HE-SIG-A1 subfield of HE-SIG-A field			
B0	Format	1	Differentiate an HE SU PPDU and HE ER SU PPDU from an HE TB PPDU: Set to 1 for an HE SU PPDU and HE ER SU PPDU.
B1	Beam Change	1	Set to 1 to indicate that the pre-HE modulated fields of the PPDU may be spatially mapped differently from the first symbol of the HE-LTF. Equation (27-6), Equation (27-9), Equation (27-12), Equation (27-14), Equation (27-16), and Equation (27-18) apply if the Beam Change field is 1. Set to 0 to indicate that the pre-HE modulated fields of the PPDU are spatially mapped the same way as the first symbol of the HE-LTF on each subcarrier. Equation (27-8), Equation (27-10), Equation (27-13), Equation (27-15), Equation (27-17), and Equation (27-19) apply if the Beam Change field is 0.
B2	UL/DL	1	Indicates whether the PPDU is sent UL or DL. Set to 1 if the PPDU is addressed to an AP. Set to 0 otherwise. See TXVECTOR parameter UPLINK_FLAG.

[7] IEEE Std 802.11ax-2021, Sec. 27.3.11.7.2.

Claim 1	Wi-Fi 6 Accused Instrumentalities
	(cont.)

B3–B6	HE-MCS	4	For an HE SU PPDU: Set to *n* for HE-MCS *n*, where *n* = 0, 1, 2, …, 11. Values 12–15 are reserved. For an HE ER SU PPDU with Bandwidth field set to 0 (242-tone RU): Set to *n* for HE-MCS *n*, where *n* = 0, 1, 2. Values 3–15 are reserved. For an HE ER SU PPDU with Bandwidth field set to 1 (upper frequency 106-tone RU): Set to 0 for HE-MCS 0. Values 1–15 are reserved.
B7	DCM	1	Indicates whether DCM is applied to the Data field for the HE-MCS indicated. See Table 27-19 for the interpretation of this field. NOTE—DCM is applicable to only HE-MCSs 0, 1, 3, and 4. DCM is applicable to only 1 and 2 spatial streams.
B8–B13	BSS Color	6	An identifier of the BSS. See TXVECTOR parameter BSS_COLOR.

Claim 1	Wi-Fi 6 Accused Instrumentalities
	(cont.) **Table 27-18—HE-SIG-A field of an HE SU PPDU and HE ER SU PPDU *(continued)***

Bit	Field	Number of bits	Description
B14	Reserved	1	Reserved and set to 1.
B15–B18	Spatial Reuse	4	Indicates whether spatial reuse modes are allowed during the transmission of this PPDU: Set to a value from Table 27-22 (see 26.11.6 and 26.10).
B19–B20	Bandwidth	2	For an HE SU PPDU: Set to 0 for 20 MHz. Set to 1 for 40 MHz. Set to 2 for 80 MHz. Set to 3 for 160 MHz and 80+80 MHz. For an HE ER SU PPDU: Set to 0 for 242-tone RU. Set to 1 for upper frequency 106-tone RU within the primary 20 MHz. Values 2 and 3 are reserved.
B21–B22	GI+HE-LTF Size	2	Indicates the GI duration and HE-LTF size. See Table 27-19 for the interpretation of this field.
B23–B25	NSTS And Midamble Periodicity	3	If the Doppler field is 0, indicates the number of space-time streams. Set to the number of space-time streams minus 1. For an HE ER SU PPDU, values 2–7 are reserved. If the Doppler field is 1, then B23-B24 indicates the number of space time streams, up to 4, and B25 indicates the midamble periodicity. B23-B24 is set to the number of space time streams minus 1. For an HE ER SU PPDU, values 2 and 3 are reserved. B25 is set to 0 for 10 symbol midamble periodicity, to 1 for 20 symbol midamble periodicity. See TXVECTOR parameter MIDAMBLE_PERIODICITY.

Claim 1	Wi-Fi 6 Accused Instrumentalities
	A second part comprises a second set of header bits of the first header field. For example, the HE-SIG-A2 subfield comprises a second set of header bits of HE-SIG-A. This is indicated below:[8]

Bit	Field	Number of bits	Description
HE-SIG-A2 subfield of HE-SIG-A field			
B0–B6	TXOP	7	Set to 127 to indicate no duration information. Set to a value less than 127 to indicate the closest minimum bound on the duration information for NAV setting and protection of the TXOP as follows: If B0 is 0, the TXOP duration indicated is B1-B6, in units of 8 µs. If B0 is 1, the TXOP duration indicated is B1-B6, in units of 128 µs, plus 512 µs. See TXVECTOR parameter TXOP_DURATION.
B7	Coding	1	Indicates whether BCC or LDPC is used: Set to 0 to indicate BCC Set to 1 to indicate LDPC
B8	LDPC Extra Symbol Segment	1	Indicates the presence of the LDPC extra symbol segment: Set to 1 if an LDPC extra symbol segment is present. Set to 0 if an LDPC extra symbol segment is not present. Reserved and set to 1 if the Coding field is 0.
B9	STBC	1	Indicates whether STBC is applied to the Data field. See Table 27-19 for the interpretation of this field.

[8] IEEE Std 802.11ax-2021, Sec. 27.3.11.7.2.

Claim 1	Wi-Fi 6 Accused Instrumentalities
	(cont.) **Table 27-18—HE-SIG-A field of an HE SU PPDU and HE ER SU PPDU *(continued)*** **Bit** / **Field** / **Number of bits** / **Description** B10 / Beamformed / 1 / Set to 1 if a beamforming steering matrix is applied to the HE modulated fields. Set to 0 otherwise. B11–B12 / Pre-FEC Padding Factor / 2 / Indicates the pre-FEC padding factor: Set to 0 to indicate a pre-FEC padding factor of 4. Set to 1 to indicate a pre-FEC padding factor of 1. Set to 2 to indicate a pre-FEC padding factor of 2. Set to 3 to indicate a pre-FEC padding factor of 3. B13 / PE Disambiguity / 1 / Indicates PE disambiguity as defined in 27.3.13. B14 / Reserved / 1 / Reserved and set to 1. B15 / Doppler / 1 / Set to 1 if one of the following applies: — The number of OFDM symbols in the Data field is larger than the signaled midamble periodicity plus 1 and the midamble is present. — The number of OFDM symbols in the Data field is less than or equal to the signaled midamble periodicity plus 1 (see 27.3.12.16, the midamble is not present, but the channel is fast varying. It recommends that midamble may be used for the PPDUs of the reverse link. Set to 0 otherwise. B16–B19 / CRC / 4 / CRC for bits 0–41 of the HE-SIG-A field (see 27.3.11.7.3). Bits 0–41 of the HE-SIG-A field correspond to bits 0–25 of the HE-SIG-A1 subfield followed by bits 0–15 of the HE-SIG-A2 subfield. B20–B25 / Tail / 6 / Used to terminate the trellis of the convolutional decoder. Set to 0. As shown above, the first set of header bits of the first header field (HE-SIG-A1) is different than the second set of header bits of the first header field (HE-SIG-A2).

Claim 1	Wi-Fi 6 Accused Instrumentalities
	It is anticipated that discovery will provide further details of the manner of infringement of the Accused Instrumentalities. In addition, the foregoing structures may be implemented in alternative configurations and usages that are equivalent to this claim element. In addition, the foregoing structures may be implemented in alternative configurations and usages that are equivalent to this claim element because they perform substantially the same function of generating a first packet type comprising a first header field, wherein the first header field comprises two parts, a first part comprising a first set of header bits of the first header field and a second part comprising a second set of header bits of the first header field, wherein the first set of header bits of the first header field is different than the second set of header bits of the first header field, in substantially the same way of generating a first packet type comprising a first header field, wherein the first header field comprises two parts, a first part comprising a first set of header bits of the first header field and a second part comprising a second set of header bits of the first header field, wherein the first set of header bits of the first header field is different than the second set of header bits of the first header field, to obtain the same result of providing additional diversity, reducing data loss and increasing decoding accuracy. For example, alternative equivalent configurations include the following, separately or in conjunction, which achieve the same functionalities provided by the claimed configurations: alternative configurations of HE PHY and PPDUs, including HE SU PPDU, HE MU PPDU, HE ER SU PPDU and HE TB PPDU; alternative configurations of the packet types or formats, headers fields, parts and bits, including HE-SIG-A, HE-SIG-A1, HE-SIG-A2, HE-SIG-A1-R, HE-SIG-A2-R, HE-SIG-B, HE-STF, HE-LTF, L-STF, L-LTF, L-SIG, RL-SIG and PE; alternative configurations of frequency and channel bands and bandwidth divisions, subdivisions, subchannels and subcarriers; alternative configurations of the HE STA, pre-HE [de]modulated and HE [de]modulated fields, transmitter, receiver, encoder, decoder, modulator and demodulator, and alternative symbols and symbol configuration, in transmitting, receiving, encoding, modulating or generating, including for alternative configurations for SU and/or MU.
an encoder and a modulator operable to generate a first OFDM symbol followed by a	The Accused Instrumentalities comprise an encoder and a modulator operable to generate a first OFDM symbol followed by a second OFDM symbol, wherein the first OFDM symbol is used to

Claim 1	Wi-Fi 6 Accused Instrumentalities
second OFDM symbol, wherein the first OFDM symbol is used to transmit the first part of the first header field and the second OFDM symbol is used to transmit the second part of the first header field;	transmit the first part of the first header field and the second OFDM symbol is used to transmit the second part of the first header field. For example, Wi-Fi 6 devices comprise an encoder and a modulator operable to generate a first OFDM symbol followed by a second OFDM symbol, wherein the first OFDM symbol is used to transmit the first part of the first header field and the second OFDM symbol is used to transmit the second part of the first header field. This is indicated below:[9] **27.3.6.6 Construction of HE-SIG-A field** a) For an HE SU PPDU, HE MU PPDU, and HE TB PPDU, the HE-SIG-A field consists of two subfields, HE-SIG-A1 and HE-SIG-A2 as defined in 27.3.11.7, and is constructed as follows: 1) Obtain the HE-SIG-A field values from the TXVECTOR. Add the reserved bits, append the calculated CRC, and then append the N_{tail} tail bits as shown in 27.3.11.7. This results in 52 uncoded bits. 2) BCC encoder: Encode the data by a convolutional encoder at the rate $R = 1/2$ as described in 17.3.5.6. 3) BCC interleaver: Interleave as described in 27.3.12.8. 4) Constellation mapper: BPSK modulate the first 52 interleaved bits as described in 17.3.5.8 to form the first OFDM symbol of the HE-SIG-A field. BPSK modulate the second 52 interleaved bits to form the second OFDM symbol of the HE-SIG-A field. (cont.)

[9] IEEE Std 802.11ax-2021, Sec. 27.3.6.6.

Appendix B
Claim Chart for U.S. Patent No. 9,973,361

Claim 1	Wi-Fi 6 Accused Instrumentalities
	5) Pilot insertion: Insert pilots as described in 17.3.5.9. 6) Duplicate and phase rotation: Duplicate the HE-SIG-A OFDM symbols over each occupied 20 MHz subchannel of the channel width. Apply the appropriate phase rotation for each occupied 20 MHz subchannel as described in 27.3.10 and 21.3.7.5. 7) CSD per STS: If the TXVECTOR parameter BEAM_CHANGE is 0, apply CSD per STS for each space-time stream and frequency segment as described in 27.3.11.2.2 before spatial mapping. 8) Spatial mapping: If the TXVECTOR parameter BEAM_CHANGE is 0, apply the A matrix and the Q matrix as described in 27.3.11.7.4. 9) IDFT: Compute the inverse discrete Fourier transform. 10) CSD per chain: If the TXVECTOR parameter BEAM_CHANGE is 1 or not present, apply CSD per chain for each transmit chain and frequency segment as described in 27.3.11.2.1. 11) GI and windowing: Prepend a GI ($T_{GI,\text{Pre-HE}}$), and apply windowing as described in 27.3.10. 12) Analog and RF: Upconvert the resulting complex baseband waveform associated with each transmit chain to an RF signal according to the center frequency of the desired channel and transmit. Refer to 27.3.10 and 27.3.11 for details.

Appendix B
Claim Chart for U.S. Patent No. 9,973,361

Claim 1	Wi-Fi 6 Accused Instrumentalities
	See also:[10] **27.3.11.7.4 Encoding and modulation** For an HE SU PPDU, HE MU PPDU, and HE TB PPDU, the HE-SIG-A field is composed of two subfields, HE-SIG-A1 and HE-SIG-A2, each containing 26 data bits. The HE-SIG-A1 subfield is transmitted before the HE-SIG-A2 subfield. The data bits of the HE-SIG-A OFDM symbols shall be BCC encoded at rate $R = 1/2$, be interleaved, be mapped to a BPSK constellation, and have pilots inserted following the steps described in 17.3.5.6, 27.3.12.8, 17.3.5.8, and 17.3.5.9, respectively. The constellation mappings of the HE-SIG-A field in an HE SU PPDU, HE MU PPDU, and HE TB PPDU are shown in Figure 27-25. The first half and second half of the stream of 104 complex numbers generated by these steps (before pilot insertion) are divided into two groups of 52 complex numbers, where the first 52 complex numbers form the first OFDM symbol of the HE-SIG-A field and the second 52 complex numbers form the second OFDM symbol of the HE-SIG-A field, respectively. If the TXVECTOR parameter BEAM_CHANGE is 1 or not present, the time domain waveform for the HE-SIG-A field of an HE SU PPDU, HE MU PPDU, and HE TB PPDU, transmitted on frequency segment i_{Seg} and transmit chain i_{TX}, shall be as specified in Equation (27-16). $$r_{\text{HE-SIG-A}}^{(i_{Seg} i_{TX})}(t) = \frac{1}{\sqrt{N_{TX} \cdot N_{\text{HE-SIG-A}}^{\text{Tone}} \cdot \frac{\lvert \Omega_{20\text{MHz}} \rvert}{N_{20\text{MHz}}}}} \sum_{n=0}^{1} w_{T_{SYML}}(t - nT_{SYML}) \sum_{i_{BW} \in \Omega_{20\text{MHz}}} \sum_{k=-28}^{28} \eta_{\text{HE-SIG-A},k} \left(\begin{array}{l} \Upsilon_{(k - K_{\text{Shift}}(i_{BW})),\,\text{BW}}(D_{k,n,20} + p_{n+2} P_k) \\ \cdot \exp(j2\pi(k - K_{\text{Shift}}(i_{\text{BW}}))\Delta_{F,\,\text{Pre-HE}}(t - nT_{SYML} - T_{GI,\,\text{Pre-HE}} - T_{CS}^{i_{TX}})) \end{array} \right) \quad (27\text{-}16)$$

[10] IEEE Std 802.11ax-2021, Sec. 27.3.11.7.4.

Claim 1	Wi-Fi 6 Accused Instrumentalities
	(cont.) where T_{SYML} is given in Table 27-12 $K_{\text{Shift}}(i) = (N_{20\text{MHz}} - 1 - 2i) \cdot 32$ $D_{k,n,20} = \begin{cases} 0, k = 0, \pm 7, \pm 21 \\ d_{M^r_{20}(k),n}, \text{ otherwise} \end{cases}$ $M^r_{20}(k) = \begin{cases} k+28, -28 \le k \le -22 \\ k+27, -20 \le k \le -8 \\ k+26, -6 \le k \le -1 \\ k+25, 1 \le k \le 6 \\ k+24, 8 \le k \le 20 \\ k+23, 22 \le k \le 28 \end{cases}$ $\eta_{\text{HE-SIG-A},k} = \begin{cases} \left[\frac{1}{\sqrt{2}}, 1\right], \text{ for an HE TB PPDU} \\ 1, \text{ otherwise} \end{cases}$ P_k and p_n are defined in 17.3.5.10 $N^{\text{Tone}}_{\text{HE-SIG-A}}$ is defined in Table 27-16 $T^{i_{TX}}_{CS}$ represents the cyclic shift for transmit chain i_{TX} with a value given in 27.3.11.2.1

Claim 1	Wi-Fi 6 Accused Instrumentalities
	(cont.) If the TXVECTOR parameter BEAM_CHANGE is 0, the time domain waveform of the HE-SIG-A field shall be as given by Equation (27-17). $$r_{\text{HE-SIG-A}}^{(i_{Seg}, i_{TX})}(t) = \frac{1}{\sqrt{N_{STS} \cdot N_{\text{HE-SIG-A}}^{\text{Tone}} \cdot \frac{\lvert\Omega_{20\text{MHz}}\rvert}{N_{20\text{MHz}}}}} \sum_{n=0}^{1} w_{T_{SYML}}(t - nT_{SYML}) \quad (27\text{-}17)$$ $$\sum_{i_{BW}=0}^{N_{20\text{MHz}}-1} \sum_{k=-28}^{28} \sum_{m=1}^{N_{STS}} \left(\left[Q_{4(k-K_{\text{Shift}}(i_{BW}))}^{(i_{Seg})} \right]_{i_{TX}, m} \left[A_{\text{HE-LTF}}^{4(k-K_{\text{Shift}}(i_{BW}))} \right]_{m,1} (D_{k,n,20} + p_{n+2}P_k) \cdot \exp(j2\pi(k - K_{\text{Shift}}(i_{\text{BW}}))\Delta_{F,\text{Pre-HE}}(t - nT_{SYML} - T_{\text{GI, Pre-HE}} - T_{CS,HE}(m))) \right)$$ where $T_{CS,\text{HE}}(m)$ represents the cyclic shift for space-time stream m as defined in 27.3.11.2.2 $Q_k^{(i_{Seg})}$ is defined in 27.3.10 $A_{\text{HE-LTF}}^k$ is defined in Equation (27-55)

Claim 1	Wi-Fi 6 Accused Instrumentalities
	See also:[11] 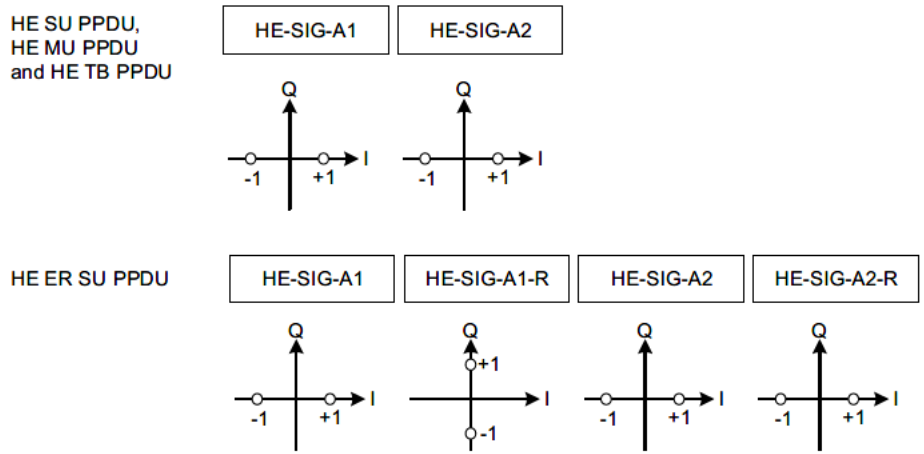 **Figure 27-25—Data subcarrier constellation of HE-SIG-A symbols** It is anticipated that discovery will provide further details of the manner of infringement of the Accused Instrumentalities. In addition, the foregoing structures may be implemented in alternative configurations and usages that are equivalent to this claim element. In addition, the foregoing structures may be implemented in alternative configurations and usages that are equivalent to this claim element because they perform substantially the same function of generating a first OFDM symbol followed by a second OFDM symbol, wherein the first OFDM symbol is used to transmit the first part of the first header field and the second OFDM symbol is used to transmit the second part of the first header field, in substantially the same way of generating a first OFDM symbol followed by a second OFDM symbol, wherein the first OFDM symbol is

[11] IEEE Std 802.11ax-2021, Sec. 27.3.11.7.4.

Claim 1	Wi-Fi 6 Accused Instrumentalities
	used to transmit the first part of the first header field and the second OFDM symbol is used to transmit the second part of the first header field, to obtain the same result of providing additional diversity, reducing data loss and increasing decoding accuracy. For example, alternative equivalent configurations include the following, separately or in conjunction, which achieve the same functionalities provided by the claimed configurations: alternative configurations of HE PHY and PPDUs, including HE SU PPDU, HE MU PPDU, HE ER SU PPDU and HE TB PPDU; alternative configurations of the packet types or formats, headers fields, parts and bits, including HE-SIG-A, HE-SIG-A1, HE-SIG-A2, HE-SIG-A1-R, HE-SIG-A2-R, HE-SIG-B, HE-STF, HE-LTF, L-STF, L-LTF, L-SIG, RL-SIG and PE; alternative configurations of frequency and channel bands and bandwidth divisions, subdivisions, subchannels and subcarriers; alternative configurations of the HE STA, pre-HE [de]modulated and HE [de]modulated fields, transmitter, receiver, encoder, decoder, modulator and demodulator, and alternative symbols and symbol configuration, in transmitting, receiving, encoding, modulating or generating, including for alternative configurations for SU and/or MU.
the wireless OFDM communications transmitter further operable to transmit the first packet type over a wireless communication channel,	The Accused Instrumentalities comprise the wireless OFDM communications transmitter further operable to transmit the first packet type over a wireless communication channel. For example, Wi-Fi 6 devices comprise the wireless OFDM communications transmitter further operable to transmit the first packet type over a wireless communication channel. For example, Wi-Fi 6 comprises high-efficiency stations (HE STAs) capable of transmitting PPDUs including the HE SU PPDU via 2.4, 5, and 6 Ghz channels. The Wi-Fi 6 standard provides that "an HE STA shall support the following features: Transmission and reception of an HE SU PPDU that consists of a single RU spanning the entire PPDU bandwidth."[12] This is indicated below:[13]

[12] IEEE Std 802.11ax-2021, Sec. 27.1.1.

[13] IEEE Std 802.11ax-2021, Sec. 27.1.1.

Appendix B
Claim Chart for U.S. Patent No. 9,973,361

Claim 1	Wi-Fi 6 Accused Instrumentalities
	27. High-efficiency (HE) PHY specification **27.1 Introduction** **27.1.1 Introduction to the HE PHY** Clause 27 specifies the PHY entity for a high-efficiency (HE) orthogonal frequency division multiplexing (OFDM) system. In addition to the requirements in Clause 27, an HE STA shall be capable of transmitting and receiving PPDUs that are compliant with the mandatory requirements of the following PHY specifications: — Clause 19 and Clause 21 if the HE STA supports an operating channel width greater than or equal to 80 MHz and is operating in the 5 GHz band. — Clause 19 and Clause 21 transmission and reception on 20 MHz channel width (see 26.17.1) if the HE STA is a 20 MHz-only non-AP HE STA and is operating in the 5 GHz band. — Clause 19 if the HE STA is operating in the 2.4 GHz band. — Clause 17 if the HE STA is operating in the 6 GHz band. For 2.4 GHz band operation, the HE PHY is based on HT PHY defined in Clause 19, which in turn is based on the OFDM PHY defined in Clause 17. For 5 GHz band operation, the HE PHY is based on the VHT PHY defined in Clause 21, which in turn is based on the HT PHY defined in Clause 19, which in turn is further based on the OFDM PHY defined in Clause 17. For 6 GHz band operation, the HE PHY is based on the OFDM PHY defined in Clause 17. An HE STA shall support the following features: — Transmission and reception of an HE SU PPDU that consists of a single RU spanning the entire PPDU bandwidth. — Transmission and reception of an HE ER SU PPDU that consists of a 242-tone RU spanning the entire primary 20 MHz PPDU bandwidth. It is anticipated that discovery will provide further details of the manner of infringement of the Accused Instrumentalities.

Claim 1	Wi-Fi 6 Accused Instrumentalities
	In addition, the foregoing structures may be implemented in alternative configurations and usages that are equivalent to this claim element. In addition, the foregoing structures may be implemented in alternative configurations and usages that are equivalent to this claim element because they perform substantially the same function of transmitting the first packet type over a wireless communication channel, in substantially the same way of transmitting the first packet type over a wireless communication channel, to obtain the same result of providing additional diversity thereby increasing the likelihood of decoding the header information correctly. For example, alternative equivalent configurations include the following, separately or in conjunction, which achieve the same functionalities provided by the claimed configurations: alternative configurations of HE PHY and PPDUs, including HE SU PPDU, HE MU PPDU, HE ER SU PPDU and HE TB PPDU; alternative configurations of the packet types or formats, headers fields, parts and bits, including HE-SIG-A, HE-SIG-A1, HE-SIG-A2, HE-SIG-A1-R, HE-SIG-A2-R, HE-SIG-B, HE-STF, HE-LTF, L-STF, L-LTF, L-SIG, RL-SIG and PE; alternative configurations of frequency and channel bands and bandwidth divisions, subdivisions, subchannels and subcarriers; alternative configurations of the HE STA, pre-HE [de]modulated and HE [de]modulated fields, transmitter, receiver, encoder, decoder, modulator and demodulator, and alternative symbols and symbol configuration, in transmitting, receiving, encoding, modulating or generating, including for alternative configurations for SU and/or MU.
the wireless OFDM communications transmitter further operable to generate a second packet type comprising a second header field, wherein the second header field comprises four parts, a first part comprising a first set of header bits of the second header field, a second part comprising a second set	The Accused Instrumentalities comprise the wireless OFDM communications transmitter further operable to generate a second packet type comprising a second header field, wherein the second header field comprises four parts, a first part comprising a first set of header bits of the second header field, a second part comprising a second set of header bits of the second header field, a third part comprising a third set of header bits of the second header field and a fourth part comprising a fourth set of header bits of the second header field. For example, Wi-Fi 6 devices comprise the wireless OFDM communications transmitter further operable to generate a second packet type comprising a second header field, wherein the second header field comprises four parts, a first part comprising a first set of header bits of the second header field, a second part comprising a second set of header bits of the second header field, a third

Claim 1	Wi-Fi 6 Accused Instrumentalities
of header bits of the second header field, a third part comprising a third set of header bits of the second header field and a fourth part comprising a fourth set of header bits of the second header field,	part comprising a third set of header bits of the second header field and a fourth part comprising a fourth set of header bits of the second header field. Wi-Fi 6 devices comprise the wireless OFDM communications transmitter further operable to generate a second packet type comprising a second header field. For example, Wi-Fi 6 devices can transmit the high-efficiency extended range single-user PPDU (HE ER SU PPDU) (second packet type), in addition to the HE SU PPDU (first packet type):[14] An HE STA shall support the following features: — Transmission and reception of an HE SU PPDU that consists of a single RU spanning the entire PPDU bandwidth. — Transmission and reception of an HE ER SU PPDU that consists of a 242-tone RU spanning the entire primary 20 MHz PPDU bandwidth. See also:[15] **high-efficiency (HE) extended range (ER) single-user (SU) physical layer (PHY) protocol data unit (PPDU) (HE ER SU PPDU):** A PPDU transmitted with HE ER SU PPDU format. This PPDU carries a single PHY service data unit (PSDU). The second packet type comprises a second header field. For example, the HE ER SU PPDU comprises an HE-SIG-A field:[16]

[14] IEEE Std 802.11ax-2021, Sec. 27.1.1.

[15] IEEE Std 802.11ax-2021, Sec. 3.2.

[16] IEEE Std 802.11ax-2021, Sec. 27.3.4.

Appendix B
Claim Chart for U.S. Patent No. 9,973,361

Claim 1	Wi-Fi 6 Accused Instrumentalities
	The format of the HE ER SU PPDU is defined as in Figure 27-10. This format is used for SU transmission, and in this format, the HE-SIG-A field is twice as long as the HE-SIG-A field in other HE PPDU formats. 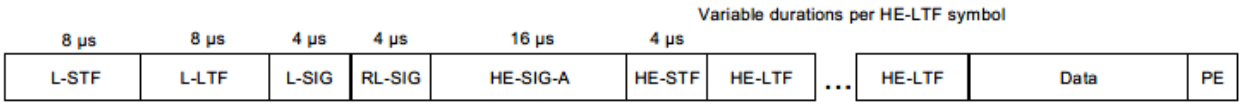 **Figure 27-10—HE ER SU PPDU format** The second header field comprises four parts, a first part comprising a first set of header bits of the second header field, a second part comprising a second set of header bits of the second header field, a third part comprising a third set of header bits of the second header field and a fourth part comprising a fourth set of header bits of the second header field. For example, the HE-SIG-A field in the HE ER SU PPDU comprises four subfields, HE-SIG-A1, HE-SIG-A1-R, HE-SIG-A2, and HE-SIG-A2-R:[17]

[17] IEEE Std 802.11ax-2021, Sec. 27.3.6.6.

Appendix B
Claim Chart for U.S. Patent No. 9,973,361

Claim 1	Wi-Fi 6 Accused Instrumentalities
	b) For an HE ER SU PPDU, the HE-SIG-A field consists of four subfields: HE-SIG-A1, HE-SIG-A1-R, HE-SIG-A2, and HE-SIG-A2-R. The HE-SIG-A1 and HE-SIG-A1-R subfields have the same data bits while the HE-SIG-A2 and HE-SIG-A2-R subfields have the same data bits as defined in 27.3.11.7. The HE-SIG-A field is constructed as follows: 1) Obtain the HE-SIG-A fields from the TXVECTOR. Add the reserved bits, append the calculated CRC, and then append the N_{tail} tail bits as shown in 27.3.11.7. This results in 52 uncoded bits. 2) BCC encoder: Encode the data by a convolutional encoder at the rate $R = 1/2$ as described in 17.3.5.6. 3) BCC interleaver: Interleave the data bits of the HE-SIG-A1 and HE-SIG-A2 subfields as described in 27.3.12.8. The data bits of the HE-SIG-A1-R and HE-SIG-A2-R subfields are not interleaved. 4) Constellation mapper: BPSK modulate the HE-SIG-A1, HE-SIG-A2, and HE-SIG-A2-R data bits as described in 17.3.5.8 to form the first, third, and fourth OFDM symbol of the HE-SIG-A field, respectively. QBPSK modulate the HE-SIG-A1-R encoded data bits to form the second OFDM symbol of the HE-SIG-A field. 5) Pilot insertion: Insert pilots as described in 17.3.5.9. 6) Duplication and phase rotation: Duplicate the HE-SIG-A field over each occupied 20 MHz subchannel of the channel bandwidth. Apply appropriate phase rotation for each occupied 20 MHz subchannel as described in 27.3.10 and 21.3.7.5. 7) CSD per STS: If the TXVECTOR parameter BEAM_CHANGE is 0, apply CSD per STS for each space-time stream and frequency segment as described in 27.3.11.2.2 before spatial mapping. 8) Spatial mapping: If the TXVECTOR parameter BEAM_CHANGE is 0, apply the A matrix and the Q matrix as described in 27.3.11.7.4. 9) IDFT: Compute the inverse Fourier transform. 10) CSD per chain: If the TXVECTOR parameter BEAM_CHANGE is 1 or not present, apply CSD per chain for each transmit chain and frequency segment as described in 27.3.11.2.1. 11) GI and windowing: Prepend a GI ($T_{GI,\text{Pre-HE}}$), and apply windowing as described in 27.3.10. 12) Analog and RF: Upconvert the resulting complex baseband waveform associated with each transmit chain to an RF signal according to the center frequency of the desired channel and transmit. Refer to 27.3.10 and 27.3.11 for details.

Claim 1	Wi-Fi 6 Accused Instrumentalities
	HE-SIG-A1 comprises a first set of header bits of HE-SIG-A, HE-SIG-A1-R comprises a second set of header bits of HE-SIG-A, HE-SIG-A2 comprises a third set of header bits of HE-SIG-A and HE-SIG-A2-R comprises a fourth set of header bits of HE-SIG-A. This is indicated below:[18] For an HE ER SU PPDU, the HE-SIG-A field is composed of four subfields: HE-SIG-A1, HE-SIG-A1-R, HE-SIG-A2, and HE-SIG-A2-R. Each subfield contains 26 data bits. These four subfields are transmitted sequentially from HE-SIG-A1 to HE-SIG-A2-R. The data bits of the HE-SIG-A1 and HE-SIG-A2 subfields shall be BCC encoded at rate $R = 1/2$, be interleaved, be mapped to a BPSK constellation, and have pilots inserted. The HE-SIG-A1-R subfield has the same encoded bits as the HE-SIG-A1 subfield, and the encoded bits shall be mapped to a QBPSK constellation without interleaving and have pilots inserted. The constellation mappings of the HE-SIG-A field in an HE ER SU PPDU are shown in Figure 27-25. The QBPSK constellation on the HE-SIG-A1-R subfield is used to differentiate between an HE ER SU PPDU and an HE MU PPDU when $m = 1$ in Equation (27-11). The HE-SIG-A2-R subfield has the same encoded bits as the HE-SIG-A2 subfield, and the encoded bits shall be mapped to a BPSK constellation without interleaving and have pilots inserted. BCC encoding, data interleaving, constellation mapping, and pilot insertion follow the steps described in 17.3.5.6, 27.3.12.8, 17.3.5.8, and 17.3.5.9, respectively. 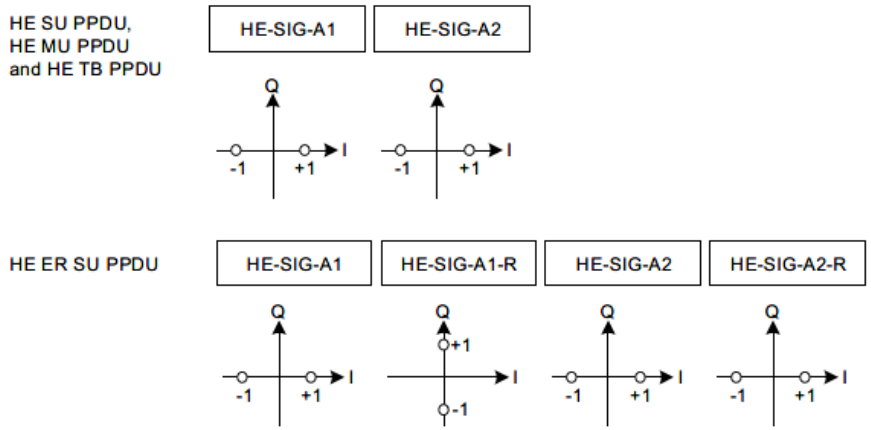 **Figure 27-25—Data subcarrier constellation of HE-SIG-A symbols**

[18] IEEE Std 802.11ax-2021, Sec. 27.3.11.7.4.

Claim 1	Wi-Fi 6 Accused Instrumentalities
	See also:[19]

Table 27-18—HE-SIG-A field of an HE SU PPDU and HE ER SU PPDU

Bit	Field	Number of bits	Description
HE-SIG-A1 subfield of HE-SIG-A field			
B0	Format	1	Differentiate an HE SU PPDU and HE ER SU PPDU from an HE TB PPDU: Set to 1 for an HE SU PPDU and HE ER SU PPDU.
B1	Beam Change	1	Set to 1 to indicate that the pre-HE modulated fields of the PPDU may be spatially mapped differently from the first symbol of the HE-LTF. Equation (27-6), Equation (27-9), Equation (27-12), Equation (27-14), Equation (27-16), and Equation (27-18) apply if the Beam Change field is 1. Set to 0 to indicate that the pre-HE modulated fields of the PPDU are spatially mapped the same way as the first symbol of the HE-LTF on each subcarrier. Equation (27-8), Equation (27-10), Equation (27-13), Equation (27-15), Equation (27-17), and Equation (27-19) apply if the Beam Change field is 0.
B2	UL/DL	1	Indicates whether the PPDU is sent UL or DL. Set to 1 if the PPDU is addressed to an AP. Set to 0 otherwise. See TXVECTOR parameter UPLINK_FLAG.
B3–B6	HE-MCS	4	For an HE SU PPDU: Set to n for HE-MCS n, where n = 0, 1, 2, …, 11. Values 12–15 are reserved. For an HE ER SU PPDU with Bandwidth field set to 0 (242-tone RU): Set to n for HE-MCS n, where n = 0, 1, 2. Values 3–15 are reserved. For an HE ER SU PPDU with Bandwidth field set to 1 (upper frequency 106-tone RU): Set to 0 for HE-MCS 0. Values 1–15 are reserved.
B7	DCM	1	Indicates whether DCM is applied to the Data field for the HE-MCS indicated. See Table 27-19 for the interpretation of this field. NOTE—DCM is applicable to only HE-MCSs 0, 1, 3, and 4. DCM is applicable to only 1 and 2 spatial streams.
B8–B13	BSS Color	6	An identifier of the BSS. See TXVECTOR parameter BSS_COLOR.

[19] IEEE Std 802.11ax-2021, Sec. 27.3.11.7.2

Claim 1	Wi-Fi 6 Accused Instrumentalities

Table 27-18—HE-SIG-A field of an HE SU PPDU and HE ER SU PPDU *(continued)*

Bit	Field	Number of bits	Description
B14	Reserved	1	Reserved and set to 1.
B15–B18	Spatial Reuse	4	Indicates whether spatial reuse modes are allowed during the transmission of this PPDU: Set to a value from Table 27-22 (see 26.11.6 and 26.10).
B19–B20	Bandwidth	2	For an HE SU PPDU: Set to 0 for 20 MHz. Set to 1 for 40 MHz. Set to 2 for 80 MHz. Set to 3 for 160 MHz and 80+80 MHz. For an HE ER SU PPDU: Set to 0 for 242-tone RU. Set to 1 for upper frequency 106-tone RU within the primary 20 MHz. Values 2 and 3 are reserved.
B21–B22	GI+HE-LTF Size	2	Indicates the GI duration and HE-LTF size. See Table 27-19 for the interpretation of this field.
B23–B25	NSTS And Midamble Periodicity	3	If the Doppler field is 0, indicates the number of space-time streams. Set to the number of space-time streams minus 1. For an HE ER SU PPDU, values 2–7 are reserved. If the Doppler field is 1, then B23-B24 indicates the number of space time streams, up to 4, and B25 indicates the midamble periodicity. B23-B24 is set to the number of space time streams minus 1. For an HE ER SU PPDU, values 2 and 3 are reserved. B25 is set to 0 for 10 symbol midamble periodicity, to 1 for 20 symbol midamble periodicity. See TXVECTOR parameter MIDAMBLE_PERIODICITY.
HE-SIG-A2 subfield of HE-SIG-A field			
B0–B6	TXOP	7	Set to 127 to indicate no duration information. Set to a value less than 127 to indicate the closest minimum bound on the duration information for NAV setting and protection of the TXOP as follows: If B0 is 0, the TXOP duration indicated is B1-B6, in units of 8 µs. If B0 is 1, the TXOP duration indicated is B1-B6, in units of 128 µs, plus 512 µs. See TXVECTOR parameter TXOP_DURATION.
B7	Coding	1	Indicates whether BCC or LDPC is used: Set to 0 to indicate BCC Set to 1 to indicate LDPC
B8	LDPC Extra Symbol Segment	1	Indicates the presence of the LDPC extra symbol segment: Set to 1 if an LDPC extra symbol segment is present. Set to 0 if an LDPC extra symbol segment is not present. Reserved and set to 1 if the Coding field is 0.
B9	STBC	1	Indicates whether STBC is applied to the Data field. See Table 27-19 for the interpretation of this field.

Claim 1	Wi-Fi 6 Accused Instrumentalities
	(cont.) **Table 27-18—HE-SIG-A field of an HE SU PPDU and HE ER SU PPDU *(continued)*** **Bit** / **Field** / **Number of bits** / **Description** B10 / Beamformed / 1 / Set to 1 if a beamforming steering matrix is applied to the HE modulated fields. Set to 0 otherwise. B11–B12 / Pre-FEC Padding Factor / 2 / Indicates the pre-FEC padding factor: Set to 0 to indicate a pre-FEC padding factor of 4. Set to 1 to indicate a pre-FEC padding factor of 1. Set to 2 to indicate a pre-FEC padding factor of 2. Set to 3 to indicate a pre-FEC padding factor of 3. B13 / PE Disambiguity / 1 / Indicates PE disambiguity as defined in 27.3.13. B14 / Reserved / 1 / Reserved and set to 1. B15 / Doppler / 1 / Set to 1 if one of the following applies: — The number of OFDM symbols in the Data field is larger than the signaled midamble periodicity plus 1 and the midamble is present. — The number of OFDM symbols in the Data field is less than or equal to the signaled midamble periodicity plus 1 (see 27.3.12.16, the midamble is not present, but the channel is fast varying. It recommends that midamble may be used for the PPDUs of the reverse link. Set to 0 otherwise. B16–B19 / CRC / 4 / CRC for bits 0–41 of the HE-SIG-A field (see 27.3.11.7.3). Bits 0–41 of the HE-SIG-A field correspond to bits 0–25 of the HE-SIG-A1 subfield followed by bits 0–15 of the HE-SIG-A2 subfield. B20–B25 / Tail / 6 / Used to terminate the trellis of the convolutional decoder. Set to 0. It is anticipated that discovery will provide further details of the manner of infringement of the Accused Instrumentalities. In addition, the foregoing structures may be implemented in alternative configurations and usages that are equivalent to this claim element. In addition, the foregoing structures may be implemented in alternative configurations and usages that are equivalent to this claim element because they perform substantially the same function of generating a second packet type comprising a second header field, wherein the second header field comprises four parts, a first part comprising a first set of header bits of the second header field, a second part comprising a second set of header bits of the second header field, a third part comprising a third set of header bits of the second header field and a fourth part comprising a

Claim 1	Wi-Fi 6 Accused Instrumentalities
	fourth set of header bits of the second header field, in substantially the same way of generating a second packet type comprising a second header field, wherein the second header field comprises four parts, a first part comprising a first set of header bits of the second header field, a second part comprising a second set of header bits of the second header field, a third part comprising a third set of header bits of the second header field and a fourth part comprising a fourth set of header bits of the second header field, to obtain the same result of providing additional diversity, reducing data loss and increasing decoding accuracy. For example, alternative equivalent configurations include the following, separately or in conjunction, which achieve the same functionalities provided by the claimed configurations: alternative configurations of HE PHY and PPDUs, including HE SU PPDU, HE MU PPDU, HE ER SU PPDU and HE TB PPDU; alternative configurations of the packet types or formats, headers fields, parts and bits, including HE-SIG-A, HE-SIG-A1, HE-SIG-A2, HE-SIG-A1-R, HE-SIG-A2-R, HE-SIG-B, HE-STF, HE-LTF, L-STF, L-LTF, L-SIG, RL-SIG and PE; alternative configurations of frequency and channel bands and bandwidth divisions, subdivisions, subchannels and subcarriers; alternative configurations of the HE STA, pre-HE [de]modulated and HE [de]modulated fields, transmitter, receiver, encoder, decoder, modulator and demodulator, and alternative symbols and symbol configuration, in transmitting, receiving, encoding, modulating or generating, including for alternative configurations for SU and/or MU.
wherein the first set of header bits of the second header field is the same as the second set of header bits of the second header field, wherein the third set of header bits of the second header field is the same as the fourth set of header bits of the second header field,	The Accused Instrumentalities comprise wherein the first set of header bits of the second header field is the same as the second set of header bits of the second header field, wherein the third set of header bits of the second header field is the same as the fourth set of header bits of the second header field. For example, in Wi-Fi 6 devices, the first set of header bits of the second header field is the same as the second set of header bits of the second header field, wherein the third set of header bits of the second header field is the same as the fourth set of header bits of the second header field.

Claim 1	Wi-Fi 6 Accused Instrumentalities
	For example, the HE-SIG-A1 subfield (first set of header bits) has the same encoded bits as the HE-SIG-A1-R subfield (second set of header bits), and the HE-SIG-A2 subfield (third set of header bits) has the same encoded bits as the HE-SIG-A2-R (fourth set of header bits):[20] For an HE ER SU PPDU, the HE-SIG-A field is composed of four subfields: HE-SIG-A1, HE-SIG-A1-R, HE-SIG-A2, and HE-SIG-A2-R. Each subfield contains 26 data bits. These four subfields are transmitted sequentially from HE-SIG-A1 to HE-SIG-A2-R. The data bits of the HE-SIG-A1 and HE-SIG-A2 subfields shall be BCC encoded at rate $R = 1/2$, be interleaved, be mapped to a BPSK constellation, and have pilots inserted. The HE-SIG-A1-R subfield has the same encoded bits as the HE-SIG-A1 subfield, and the encoded bits shall be mapped to a QBPSK constellation without interleaving and have pilots inserted. The constellation mappings of the HE-SIG-A field in an HE ER SU PPDU are shown in Figure 27-25. The QBPSK constellation on the HE-SIG-A1-R subfield is used to differentiate between an HE ER SU PPDU and an HE MU PPDU when $m = 1$ in Equation (27-11). The HE-SIG-A2-R subfield has the same encoded bits as the HE-SIG-A2 subfield, and the encoded bits shall be mapped to a BPSK constellation without interleaving and have pilots inserted. BCC encoding, data interleaving, constellation mapping, and pilot insertion follow the steps described in 17.3.5.6, 27.3.12.8, 17.3.5.8, and 17.3.5.9, respectively. 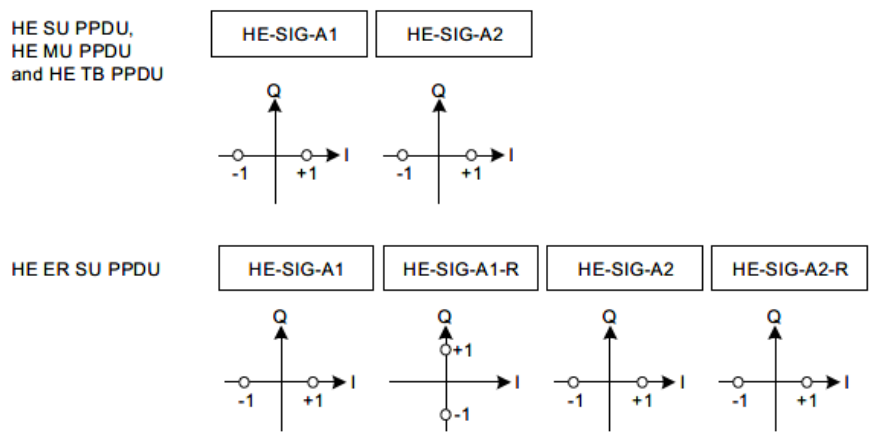 **Figure 27-25—Data subcarrier constellation of HE-SIG-A symbols**

[20] IEEE Std 802.11ax-2021, Sec. 27.3.11.7.4.

Claim 1	Wi-Fi 6 Accused Instrumentalities
	See also:[21] b) For an HE ER SU PPDU, the HE-SIG-A field consists of four subfields: HE-SIG-A1, HE-SIG-A1-R, HE-SIG-A2, and HE-SIG-A2-R. The HE-SIG-A1 and HE-SIG-A1-R subfields have the same data bits while the HE-SIG-A2 and HE-SIG-A2-R subfields have the same data bits as defined in 27.3.11.7. The HE-SIG-A field is constructed as follows: It is anticipated that discovery will provide further details of the manner of infringement of the Accused Instrumentalities. In addition, the foregoing structures may be implemented in alternative configurations and usages that are equivalent to this claim element. In addition, the foregoing structures may be implemented in alternative configurations and usages that are equivalent to this claim element because they perform substantially the same function of transmitting the packet type wherein the first set of header bits of the second header field is the same as the second set of header bits of the second header field, wherein the third set of header bits of the second header field is the same as the fourth set of header bits of the second header field, in substantially the same way of transmitting the packet type wherein the first set of header bits of the second header field is the same as the second set of header bits of the second header field, wherein the third set of header bits of the second header field is the same as the fourth set of header bits of the second header field, to obtain the same result of providing additional diversity, reducing data loss and increasing decoding accuracy. For example, alternative equivalent configurations include the following, separately or in conjunction, which achieve the same functionalities provided by the claimed configurations: alternative configurations of HE PHY and PPDUs, including HE SU PPDU, HE MU PPDU, HE ER SU PPDU and HE TB PPDU; alternative configurations of the packet types or formats, headers fields, parts and bits, including HE-SIG-A, HE-SIG-A1, HE-SIG-A2, HE-SIG-A1-R, HE-SIG-A2-R, HE-SIG-B, HE-STF, HE-LTF, L-STF, L-LTF, L-SIG, RL-SIG and PE; alternative configurations of frequency and channel bands and bandwidth divisions, subdivisions, subchannels and subcarriers; alternative configurations of the HE STA, pre-HE [de]modulated and

[21] IEEE Std 802.11ax-2021, Sec. 27.3.6.6.

Claim 1	Wi-Fi 6 Accused Instrumentalities
	HE [de]modulated fields, transmitter, receiver, encoder, decoder, modulator and demodulator, and alternative symbols and symbol configuration, in transmitting, receiving, encoding, modulating or generating, including for alternative configurations for SU and/or MU.
the encoder and the modulator further operable to generate a first OFDM symbol followed by a second OFDM symbol followed by a third OFDM symbol followed by a fourth OFDM symbol, wherein the first OFDM symbol is used to transmit the first part of the second header field, the second OFDM symbol is used to transmit the second part of the second header field, the third OFDM symbol is used to transmit the third part of the second header field, the fourth OFDM symbol is used to transmit the fourth part of the second header field,	The Accused Instrumentalities comprise the encoder and the modulator further operable to generate a first OFDM symbol followed by a second OFDM symbol followed by a third OFDM symbol followed by a fourth OFDM symbol, wherein the first OFDM symbol is used to transmit the first part of the second header field, the second OFDM symbol is used to transmit the second part of the second header field, the third OFDM symbol is used to transmit the third part of the second header field, the fourth OFDM symbol is used to transmit the fourth part of the second header field. For example, Wi-Fi 6 devices comprise the encoder and the modulator further operable to generate a first OFDM symbol followed by a second OFDM symbol followed by a third OFDM symbol followed by a fourth OFDM symbol, wherein the first OFDM symbol is used to transmit the first part of the second header field, the second OFDM symbol is used to transmit the second part of the second header field, the third OFDM symbol is used to transmit the third part of the second header field, the fourth OFDM symbol is used to transmit the fourth part of the second header field. This is indicated below:[22]

[22] IEEE Std 802.11ax-2021, Sec. 27.3.6.6.

Appendix B
Claim Chart for U.S. Patent No. 9,973,361

Claim 1	Wi-Fi 6 Accused Instrumentalities
	b) For an HE ER SU PPDU, the HE-SIG-A field consists of four subfields: HE-SIG-A1, HE-SIG-A1-R, HE-SIG-A2, and HE-SIG-A2-R. The HE-SIG-A1 and HE-SIG-A1-R subfields have the same data bits while the HE-SIG-A2 and HE-SIG-A2-R subfields have the same data bits as defined in 27.3.11.7. The HE-SIG-A field is constructed as follows: 1) Obtain the HE-SIG-A fields from the TXVECTOR. Add the reserved bits, append the calculated CRC, and then append the N_{tail} tail bits as shown in 27.3.11.7. This results in 52 uncoded bits. 2) BCC encoder: Encode the data by a convolutional encoder at the rate $R = 1/2$ as described in 17.3.5.6. 3) BCC interleaver: Interleave the data bits of the HE-SIG-A1 and HE-SIG-A2 subfields as described in 27.3.12.8. The data bits of the HE-SIG-A1-R and HE-SIG-A2-R subfields are not interleaved. 4) Constellation mapper: BPSK modulate the HE-SIG-A1, HE-SIG-A2, and HE-SIG-A2-R data bits as described in 17.3.5.8 to form the first, third, and fourth OFDM symbol of the HE-SIG-A field, respectively. QBPSK modulate the HE-SIG-A1-R encoded data bits to form the second OFDM symbol of the HE-SIG-A field. See also:[23]

[23] IEEE Std 802.11ax-2021, Sec. 27.3.11.7.4.

Claim 1	Wi-Fi 6 Accused Instrumentalities
	For an HE ER SU PPDU, the HE-SIG-A field is composed of four subfields: HE-SIG-A1, HE-SIG-A1-R, HE-SIG-A2, and HE-SIG-A2-R. Each subfield contains 26 data bits. These four subfields are transmitted sequentially from HE-SIG-A1 to HE-SIG-A2-R. The data bits of the HE-SIG-A1 and HE-SIG-A2 subfields shall be BCC encoded at rate $R = 1/2$, be interleaved, be mapped to a BPSK constellation, and have pilots inserted. The HE-SIG-A1-R subfield has the same encoded bits as the HE-SIG-A1 subfield, and the encoded bits shall be mapped to a QBPSK constellation without interleaving and have pilots inserted. The constellation mappings of the HE-SIG-A field in an HE ER SU PPDU are shown in Figure 27-25. The QBPSK constellation on the HE-SIG-A1-R subfield is used to differentiate between an HE ER SU PPDU and an HE MU PPDU when $m = 1$ in Equation (27-11). The HE-SIG-A2-R subfield has the same encoded bits as the HE-SIG-A2 subfield, and the encoded bits shall be mapped to a BPSK constellation without interleaving and have pilots inserted. BCC encoding, data interleaving, constellation mapping, and pilot insertion follow the steps described in 17.3.5.6, 27.3.12.8, 17.3.5.8, and 17.3.5.9, respectively. 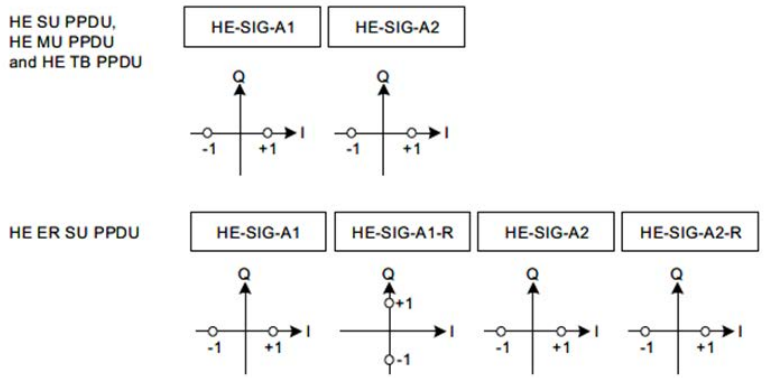 **Figure 27-25—Data subcarrier constellation of HE-SIG-A symbols** It is anticipated that discovery will provide further details of the manner of infringement of the Accused Instrumentalities. In addition, the foregoing structures may be implemented in alternative configurations and usages that are equivalent to this claim element. In addition, the foregoing structures may be implemented in alternative configurations and usages that are equivalent to this claim element because they perform substantially the same function of generating a first OFDM symbol followed by a second OFDM symbol followed by a third OFDM symbol followed by a fourth OFDM symbol, wherein the first OFDM symbol is used to transmit

Claim 1	Wi-Fi 6 Accused Instrumentalities
	the first part of the second header field, the second OFDM symbol is used to transmit the second part of the second header field, the third OFDM symbol is used to transmit the third part of the second header field, the fourth OFDM symbol is used to transmit the fourth part of the second header field, in substantially the same way of generating a first OFDM symbol followed by a second OFDM symbol followed by a third OFDM symbol followed by a fourth OFDM symbol, wherein the first OFDM symbol is used to transmit the first part of the second header field, the second OFDM symbol is used to transmit the second part of the second header field, the third OFDM symbol is used to transmit the third part of the second header field, the fourth OFDM symbol is used to transmit the fourth part of the second header field, to obtain the same result of providing additional diversity, reducing data loss and increasing decoding accuracy. For example, alternative equivalent configurations include the following, separately or in conjunction, which achieve the same functionalities provided by the claimed configurations: alternative configurations of HE PHY and PPDUs, including HE SU PPDU, HE MU PPDU, HE ER SU PPDU and HE TB PPDU; alternative configurations of the packet types or formats, headers fields, parts and bits, including HE-SIG-A, HE-SIG-A1, HE-SIG-A2, HE-SIG-A1-R, HE-SIG-A2-R, HE-SIG-B, HE-STF, HE-LTF, L-STF, L-LTF, L-SIG, RL-SIG and PE; alternative configurations of frequency and channel bands and bandwidth divisions, subdivisions, subchannels and subcarriers; alternative configurations of the HE STA, pre-HE [de]modulated and HE [de]modulated fields, transmitter, receiver, encoder, decoder, modulator and demodulator, and alternative symbols and symbol configuration, in transmitting, receiving, encoding, modulating or generating, including for alternative configurations for SU and/or MU.
wherein the second set of header bits of the second header field transmitted using the second OFDM symbol are transmitted in a different order than the first set of header bits of the second header field transmitted using the first OFDM symbol,	The Accused Instrumentalities comprise wherein the second set of header bits of the second header field transmitted using the second OFDM symbol are transmitted in a different order than the first set of header bits of the second header field transmitted using the first OFDM symbol. For example, in Wi-Fi 6 devices, the second set of header bits of the second header field transmitted using the second OFDM symbol are transmitted in a different order than the first set of header bits of the second header field transmitted using the first OFDM symbol.

Claim 1	Wi-Fi 6 Accused Instrumentalities
	For example, the bits of HE-SIG-A1-R are not interleaved, whereas the bits of HE-SIG-A1 are interleaved. This is indicated below:[24] b) For an HE ER SU PPDU, the HE-SIG-A field consists of four subfields: HE-SIG-A1, HE-SIG-A1-R, HE-SIG-A2, and HE-SIG-A2-R. The HE-SIG-A1 and HE-SIG-A1-R subfields have the same data bits while the HE-SIG-A2 and HE-SIG-A2-R subfields have the same data bits as defined in 27.3.11.7. The HE-SIG-A field is constructed as follows: 1) Obtain the HE-SIG-A fields from the TXVECTOR. Add the reserved bits, append the calculated CRC, and then append the N_{tail} tail bits as shown in 27.3.11.7. This results in 52 uncoded bits. 2) BCC encoder: Encode the data by a convolutional encoder at the rate $R = 1/2$ as described in 17.3.5.6. 3) BCC interleaver: Interleave the data bits of the HE-SIG-A1 and HE-SIG-A2 subfields as described in 27.3.12.8. The data bits of the HE-SIG-A1-R and HE-SIG-A2-R subfields are not interleaved. Interleaving the bits of HE-SIG-A1 and not interleaving the bits of HE-SIG-A1-R results in a different transmission order of bits as between HE-SIG-A1 and HE-SIG-A1-R. See also:[25]

[24] IEEE Std 802.11ax-2021, Sec. 27.3.6.6.

[25] IEEE Std 802.11ax-2021, Sec. 27.3.12.8.

Appendix B
Claim Chart for U.S. Patent No. 9,973,361

Claim 1	Wi-Fi 6 Accused Instrumentalities
	27.3.12.8 BCC interleavers For ease of explanation, the operation of the interleaver is described only for the SU case. For user u of an MU transmission, the interleaver operates in the same way on the output bits for the user from the stream parser by replacing N_{SS}, N_{CBPSS}, N_{CBPS}, and N_{BPSCS} with $N_{SS,u}$, $N_{CBPSS,u}$, $N_{CBPS,u}$ and $N_{BPSCS,u}$, respectively. That is, the operation of the interleaver is the same as if the transmission were an SU one, consisting of bits from only that user. The BCC interleaver operation is specified in 21.3.10.8. The interleaver parameters, N_{COL}, N_{ROW}, and N_{ROT}, for the Data field depend on the RU size and whether or not DCM is used and are defined in the "RU size" column of Table 27-35. (cont.)

Claim 1	Wi-Fi 6 Accused Instrumentalities

Table 27-35—BCC interleaver parameters

DCM	Parameter	RU size (tones)				HE-SIG-A/ HE-SIG-B (tones)
		26	52	106	242	56
Not used	N_{COL}	8	16	17	26	13
	N_{ROW}	$3 \times N_{BPSCS}$	$3 \times N_{BPSCS}$	$6 \times N_{BPSCS}$	$9 \times N_{BPSCS}$	$4 \times N_{BPSCS}$
	N_{ROT}	2	11	29	58	—
Used	N_{COL}	4	8	17	13	13
	N_{ROW}	$3 \times N_{BPSCS}$	$3 \times N_{BPSCS}$	$3 \times N_{BPSCS}$	$9 \times N_{BPSCS}$	$2 \times N_{BPSCS}$
	N_{ROT}	2	2	11	29	—

The interleaver parameters, N_{COL} and N_{ROW}, for the HE-SIG-A and HE-SIG-B fields are defined in the "HE-SIG-A/HE-SIG-B" column of Table 27-35.

NOTE—DCM is not used on the HE-SIG-A field.

Claim 1	Wi-Fi 6 Accused Instrumentalities
	See also:[26] **21.3.10.8 BCC interleaver** For ease of explanation, the operation of the interleaver is described for the SU case. For user u of an MU transmission, the interleaver operates in the same way on the output bits for the user from the stream parser by replacing N_{SS}, N_{CBPSS}, N_{CBPSSI}, and N_{BPSCS} with $N_{SS,u}$, $N_{CBPSS,u}$, $N_{CBPSSI,u}$, and $N_{BPSCS,u}$, respectively. That is, the operation of the interleaver is the same as if the transmission were an SU one, consisting of bits from only that user. This subclause describes the interleaver used in the case of BCC encoding. The interleaver described in this subclause shall be bypassed in the case of LDPC encoding. In a 20 MHz, 40 MHz, or 80 MHz VHT PPDU transmission, the bits at the output of the stream parser are processed in groups of N_{CBPS} bits. Each of these groups is divided into N_{SS} blocks of N_{CBPSS} bits, and each block shall be interleaved by an interleaver based on the Clause 17 interleaver. In a 160 MHz or an 80+80 MHz VHT PPDU transmission, each frequency subblock of $N_{CBPSS}/2$ output bits from the segment parser is interleaved by the interleaver for 80 MHz defined in this subclause. This interleaver, which is based on entering the data in rows, and reading it out in columns, has a different number of columns N_{COL} and rows N_{ROW} for different bandwidths. The values of N_{COL} and N_{ROW} are given in Table 21-17. **Table 21-17—Number of rows and columns in the interleaver** | Parameter | 20 MHz | 40 MHz | 80 MHz | | N_{COL} | 13 | 18 | 26 | | N_{ROW} | $4 \times N_{BPSCS}$ | $6 \times N_{BPSCS}$ | $9 \times N_{BPSCS}$ | | N_{ROT} ($N_{SS} \leq 4$) | 11 | 29 | 58 | | N_{ROT} ($N_{SS} > 4$) | 6 | 13 | 28 |

[26] IEEE Std 802.11-2020, Sec. 21.3.10.8.

Claim 1	Wi-Fi 6 Accused Instrumentalities
	(cont.) After the operations based on the Clause 17 interleaver have been applied and if more than one spatial stream exists, a third operation called *frequency rotation* is applied to the additional spatial streams. The parameter for the frequency rotation is N_{ROT}. The values of N_{ROT} are given in Table 21-17. An additional parameter is the spatial stream index $i_{SS} = 1, 2, \ldots, N_{SS}$. The output of the third operation is a function of the spatial stream index. The interleaving is defined using three permutations. The first permutation is given by the rule shown in Equation (21-76). $$i = N_{ROW}(k \bmod N_{COL}) + \left\lfloor \frac{k}{N_{COL}} \right\rfloor, k = 0, 1, \ldots, N_{CBPSSI} - 1 \quad (21\text{-}76)$$ The second permutation is defined by the rule shown in Equation (21-77). $$j = s\left\lfloor \frac{i}{s} \right\rfloor + \left(i + N_{CBPSSI} - \left\lfloor \frac{N_{COL} \cdot i}{N_{CBPSSI}} \right\rfloor\right) \bmod s, \quad i = 0, 1, \ldots, N_{CBPSSI} - 1 \quad (21\text{-}77)$$ where s is defined in Equation (21-68)

Claim 1	Wi-Fi 6 Accused Instrumentalities
	(cont.) If $2 \le N_{SS} \le 4$, a frequency rotation is applied to the output of the second permutation as shown in Equation (21-78). $$r = \left\{ j - \left[(2(i_{SS} - 1)) \bmod 3 + 3 \left\lfloor \frac{i_{SS} - 1}{3} \right\rfloor \right] \cdot N_{ROT} \cdot N_{BPSCS} \right\} \bmod N_{CBPSSI}, \quad (21\text{-}78)$$ $$j = 0, 1, \ldots, N_{CBPSSI} - 1$$ where $i_{SS} = 1, 2, \ldots, N_{SS}$ is the spatial steam index on which this interleaver is operating If $N_{SS} > 4$, a frequency rotation is applied to the output of the second permutation as shown in Equation (21-79). $$r = \{ j - J(i_{SS}) \cdot N_{ROT} \cdot N_{BPSCS} \} \bmod N_{CBPSSI}, j = 0, 1, \ldots, N_{CBPSSI} - 1 \quad (21\text{-}79)$$ where $i_{SS} = 1, 2, \ldots, N_{SS}$ is the spatial steam index on which this interleaver is operating, and $J(i_{SS})$ is an integer as defined in Table 21-18.

Claim 1	Wi-Fi 6 Accused Instrumentalities
	(cont.) **Table 21-18—$J(i_{SS})$ values** i_{SS} / $J(i_{SS})$ 1 / 0 2 / 5 3 / 2 4 / 7 5 / 3 6 / 6 7 / 1 8 / 4

Claim 1	Wi-Fi 6 Accused Instrumentalities
	Interleaving is a three-step permutation process that begins with interleaving using an interleaver based on the "Clause 17 interleaver," as indicated above. Per Clause 17, interleaving is performed separately for every OFDM symbol. The first permutation causes adjacent coded bits to be mapped onto nonadjacent subcarriers. The second causes adjacent coded bits to be mapped alternately onto less and more significant constellation bits:[27] **17.3.5.7 Data interleaving** All encoded data bits shall be interleaved by a block interleaver with a block size corresponding to the number of bits in a single OFDM symbol, N_{CBPS}. The interleaver is defined by a two-step permutation. The first permutation causes adjacent coded bits to be mapped onto nonadjacent subcarriers. The second causes adjacent coded bits to be mapped alternately onto less and more significant bits of the constellation and, thereby, long runs of low reliability (LSB) bits are avoided. As further indicated above, after the operations based on the Clause 17 interleaver have been applied, and if more than one spatial stream exists, a third operation called frequency rotation is applied to the additional spatial stream. The purpose of the interleaver, as indicated above, is to process OFDM symbols such that adjacent bits are not associated with a single subcarrier or adjacent subcarriers. Instead, adjacent bits are permuted onto nonadjacent subcarriers and onto more or less significant bits, i.e., reordered. It is anticipated that discovery will provide further details of the manner of infringement of the Accused Instrumentalities. In addition, the foregoing structures may be implemented in alternative configurations and usages that are equivalent to this claim element. In addition, the foregoing structures may be implemented in alternative configurations and usages that are equivalent to this claim element because they perform substantially the same function of transmitting the second set of header bits of the second header field using the second OFDM symbol in a different order than the first set of header bits of the second header field transmitted using the first OFDM symbol, in substantially the same way of transmitting the second set of header bits of

[27] IEEE Std 802.11-2020, Sec. 17.3.5.7.

Claim 1	Wi-Fi 6 Accused Instrumentalities
	the second header field using the second OFDM symbol in a different order than the first set of header bits of the second header field transmitted using the first OFDM symbol, to obtain the same result of providing additional diversity, reducing data loss and increasing decoding accuracy. For example, alternative equivalent configurations include the following, separately or in conjunction, which achieve the same functionalities provided by the claimed configurations: alternative configurations of HE PHY and PPDUs, including HE SU PPDU, HE MU PPDU, HE ER SU PPDU and HE TB PPDU; alternative configurations of the packet types or formats, headers fields, parts and bits, including HE-SIG-A, HE-SIG-A1, HE-SIG-A2, HE-SIG-A1-R, HE-SIG-A2-R, HE-SIG-B, HE-STF, HE-LTF, L-STF, L-LTF, L-SIG, RL-SIG and PE; alternative configurations of frequency and channel bands and bandwidth divisions, subdivisions, subchannels and subcarriers; alternative configurations of the HE STA, pre-HE [de]modulated and HE [de]modulated fields, transmitter, receiver, encoder, decoder, modulator and demodulator, and alternative symbols and symbol configuration, in transmitting, receiving, encoding, modulating or generating, including for alternative configurations for SU and/or MU.
wherein the fourth set of header bits of the second header field transmitted using the fourth OFDM symbol are transmitted in a different order than the third set of header bits of the second header field transmitted using the third OFDM symbol, and	The Accused Instrumentalities comprise wherein the fourth set of header bits of the second header field transmitted using the fourth OFDM symbol are transmitted in a different order than the third set of header bits of the second header field transmitted using the third OFDM symbol. For example, Wi-Fi 6 devices comprise wherein the fourth set of header bits of the second header field transmitted using the fourth OFDM symbol are transmitted in a different order than the third set of header bits of the second header field transmitted using the third OFDM symbol. For example, the bits of HE-SIG-A2-R are not interleaved, whereas the bits of HE-SIG-A2 are interleaved. This is indicated below:[28]

[28] IEEE Std 802.11ax-2021, Sec. 27.3.6.6.

Claim 1	Wi-Fi 6 Accused Instrumentalities
	b) For an HE ER SU PPDU, the HE-SIG-A field consists of four subfields: HE-SIG-A1, HE-SIG-A1-R, HE-SIG-A2, and HE-SIG-A2-R. The HE-SIG-A1 and HE-SIG-A1-R subfields have the same data bits while the HE-SIG-A2 and HE-SIG-A2-R subfields have the same data bits as defined in 27.3.11.7. The HE-SIG-A field is constructed as follows: 1) Obtain the HE-SIG-A fields from the TXVECTOR. Add the reserved bits, append the calculated CRC, and then append the N_{tail} tail bits as shown in 27.3.11.7. This results in 52 uncoded bits. 2) BCC encoder: Encode the data by a convolutional encoder at the rate $R = 1/2$ as described in 17.3.5.6. 3) BCC interleaver: Interleave the data bits of the HE-SIG-A1 and HE-SIG-A2 subfields as described in 27.3.12.8. The data bits of the HE-SIG-A1-R and HE-SIG-A2-R subfields are not interleaved. Interleaving the bits of HE-SIG-A2 and not interleaving the bits of HE-SIG-A2-R results in a different transmission order of bits as between HE-SIG-A2 and HE-SIG-A2-R. It is anticipated that discovery will provide further details of the manner of infringement of the Accused Instrumentalities. In addition, the foregoing structures may be implemented in alternative configurations and usages that are equivalent to this claim element. In addition, the foregoing structures may be implemented in alternative configurations and usages that are equivalent to this claim element because they perform substantially the same function of transmitting the fourth set of header bits of the second header field using the fourth OFDM symbol in a different order than the third set of header bits of the second header field transmitted using the third OFDM symbol, in substantially the same way of transmitting the fourth set of header bits of the second header field using the fourth OFDM symbol in a different order than the third set of header bits of the second header field transmitted using the third OFDM symbol, to obtain the same result of providing additional diversity, reducing data loss and increasing decoding accuracy. For example, alternative equivalent configurations include the following, separately or in conjunction, which achieve the same functionalities provided by the claimed configurations: alternative configurations of HE PHY and PPDUs, including HE SU PPDU, HE

Claim 1	Wi-Fi 6 Accused Instrumentalities
	MU PPDU, HE ER SU PPDU and HE TB PPDU; alternative configurations of the packet types or formats, headers fields, parts and bits, including HE-SIG-A, HE-SIG-A1, HE-SIG-A2, HE-SIG-A1-R, HE-SIG-A2-R, HE-SIG-B, HE-STF, HE-LTF, L-STF, L-LTF, L-SIG, RL-SIG and PE; alternative configurations of frequency and channel bands and bandwidth divisions, subdivisions, subchannels and subcarriers; alternative configurations of the HE STA, pre-HE [de]modulated and HE [de]modulated fields, transmitter, receiver, encoder, decoder, modulator and demodulator, and alternative symbols and symbol configuration, in transmitting, receiving, encoding, modulating or generating, including for alternative configurations for SU and/or MU.
the wireless OFDM communications transmitter further operable to transmit the second packet type over the wireless communication channel.	The Accused Instrumentalities comprise the wireless OFDM communications transmitter further operable to transmit the second packet type over the wireless communication channel. For example, Wi-Fi 6 devices comprise the wireless OFDM communications transmitter further operable to transmit the second packet type over the wireless communication channel. For example, Wi-Fi 6 comprises high-efficiency stations (HE STAs) capable of transmitting PPDUs including the HE ER SU PPDU via 2.4, 5, and 6 Ghz channels. The HE STAs are further capable of "[t]ransmission and reception of an HE ER SU PPDU that consists of a 242-tone RU spanning the entire primary 20 MHz PPDU bandwidth."[29] This is indicated below:[30]

[29] IEEE Std 802.11ax-2021, Sec. 27.1.1

[30] IEEE Std 802.11ax-2021, Sec. 27.1.1.

Appendix B
Claim Chart for U.S. Patent No. 9,973,361

Claim 1	Wi-Fi 6 Accused Instrumentalities
	27. High-efficiency (HE) PHY specification **27.1 Introduction** **27.1.1 Introduction to the HE PHY** Clause 27 specifies the PHY entity for a high-efficiency (HE) orthogonal frequency division multiplexing (OFDM) system. In addition to the requirements in Clause 27, an HE STA shall be capable of transmitting and receiving PPDUs that are compliant with the mandatory requirements of the following PHY specifications: — Clause 19 and Clause 21 if the HE STA supports an operating channel width greater than or equal to 80 MHz and is operating in the 5 GHz band. — Clause 19 and Clause 21 transmission and reception on 20 MHz channel width (see 26.17.1) if the HE STA is a 20 MHz-only non-AP HE STA and is operating in the 5 GHz band. — Clause 19 if the HE STA is operating in the 2.4 GHz band. — Clause 17 if the HE STA is operating in the 6 GHz band. For 2.4 GHz band operation, the HE PHY is based on HT PHY defined in Clause 19, which in turn is based on the OFDM PHY defined in Clause 17. For 5 GHz band operation, the HE PHY is based on the VHT PHY defined in Clause 21, which in turn is based on the HT PHY defined in Clause 19, which in turn is further based on the OFDM PHY defined in Clause 17. For 6 GHz band operation, the HE PHY is based on the OFDM PHY defined in Clause 17. See also :[31]

[31] IEEE Std 802.11ax-2021, Sec. 27.1.1.

Claim 1	Wi-Fi 6 Accused Instrumentalities
	The HE PHY provides support for midambles. Midambles facilitate updating of the channel estimate during HE PPDU reception and might be of use in high mobility scenarios that often result in significant variations of the wireless channel over the duration of a PPDU. An HE STA shall support the following features: — Transmission and reception of an HE SU PPDU that consists of a single RU spanning the entire PPDU bandwidth. — Transmission and reception of an HE ER SU PPDU that consists of a 242-tone RU spanning the entire primary 20 MHz PPDU bandwidth. It is anticipated that discovery will provide further details of the manner of infringement of the Accused Instrumentalities. In addition, the foregoing structures may be implemented in alternative configurations and usages that are equivalent to this claim element. In addition, the foregoing structures may be implemented in alternative configurations and usages that are equivalent to this claim element because they perform substantially the same function of transmitting the second packet type over the wireless communication channel, in substantially the same way of transmitting the second packet type over the wireless communication channel, to obtain the same result of providing additional diversity, reducing data loss and increasing decoding accuracy. For example, alternative equivalent configurations include the following, separately or in conjunction, which achieve the same functionalities provided by the claimed configurations: alternative configurations of HE PHY and PPDUs, including HE SU PPDU, HE MU PPDU, HE ER SU PPDU and HE TB PPDU; alternative configurations of the packet types or formats, headers fields, parts and bits, including HE-SIG-A, HE-SIG-A1, HE-SIG-A2, HE-SIG-A1-R, HE-SIG-A2-R, HE-SIG-B, HE-STF, HE-LTF, L-STF, L-LTF, L-SIG, RL-SIG and PE; alternative configurations of frequency and channel bands and bandwidth divisions, subdivisions, subchannels and subcarriers; alternative configurations of the HE STA, pre-HE [de]modulated and HE [de]modulated fields, transmitter, receiver, encoder, decoder, modulator and demodulator, and

Appendix B
Claim Chart for U.S. Patent No. 9,973,361

Claim 1	Wi-Fi 6 Accused Instrumentalities
	alternative symbols and symbol configuration, in transmitting, receiving, encoding, modulating or generating, including for alternative configurations for SU and/or MU.

Appendix B
Claim Chart for U.S. Patent No. 9,973,361

Claim 2	Wi-Fi 6 Accused Instrumentalities
The wireless transceiver of claim 1, wherein the transmission of the same header bits in the second OFDM symbol provides diversity to increase a likelihood of correctly communicating header information of the second packet type.	The Accused Instrumentalities comprise wherein the transmission of the same header bits in the second OFDM symbol provides diversity to increase a likelihood of correctly communicating header information of the second packet type. For example, Wi-Fi 6 devices comprise wherein the transmission of the same header bits in the second OFDM symbol provides diversity to increase a likelihood of correctly communicating header information of the second packet type. This is indicated below:[32] **Sept 2015** **doc.: IEEE 802.11-15/0826r2** **HE-SIGA transmission for range extension** **Date:** 2015-07-12

[32]September 2015 Working Group Comments, IEEE Std 802.11-15/0826r2

Appendix B
Claim Chart for U.S. Patent No. 9,973,361

Claim 2	Wi-Fi 6 Accused Instrumentalities
	Transmitter of HE-SIG-A • **We propose to use the time repetition and bypassing the bit interleaver of repeated HE-SIG-A symbols to enhance robustness of HE-SIG-A in outdoor scenarios.** 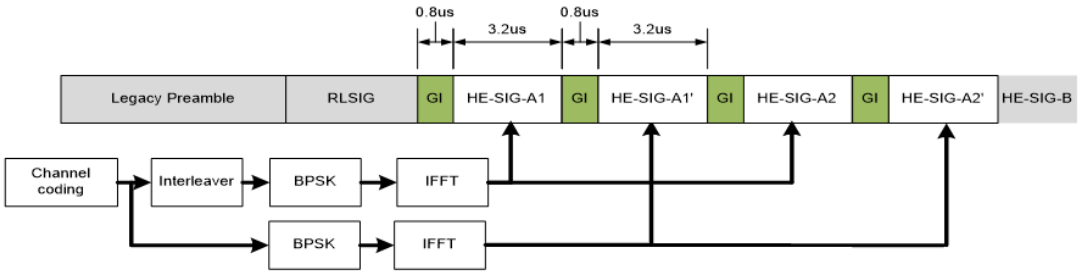

Claim 2	Wi-Fi 6 Accused Instrumentalities
	Conclusion • **Repeated HE-SIGA is needed in many use cases including range extension and outdoor channel operation.** • **An implementation friendly repetition method is proposed to harvest the frequency diversity gain.** These working group comments were adopted by the IEEE 802.11ax standard and are implemented by the Accused Instrumentalities. This is indicated below:[33] Example transmitter block diagrams are shown in Figure 27-13 to Figure 27-22. The actual structure of the transmitter is implementation dependent. In particular, Figure 27-13 shows the transmit process for the L-SIG, RL-SIG, and HE-SIG-A fields of an HE PPDU using one frequency segment when the Beam Change subfield in the HE-SIG-A field is 1. These transmit blocks are also used to generate the L-STF and L-LTF fields of the HE PPDU when the Beam Change subfield in the HE-SIG-A field is 1, with the following exceptions: — The BCC encoder and interleaver and the constellation mapper are not used when generating the L-STF and L-LTF fields. — The BCC interleaver is not applied in the 2nd and the 4th OFDM symbols of the HE-SIG-A field in the HE ER SU PPDU.

[33] IEEE Std 802.11ax-2021, Sec. 27.3.5.

Claim 2	Wi-Fi 6 Accused Instrumentalities
	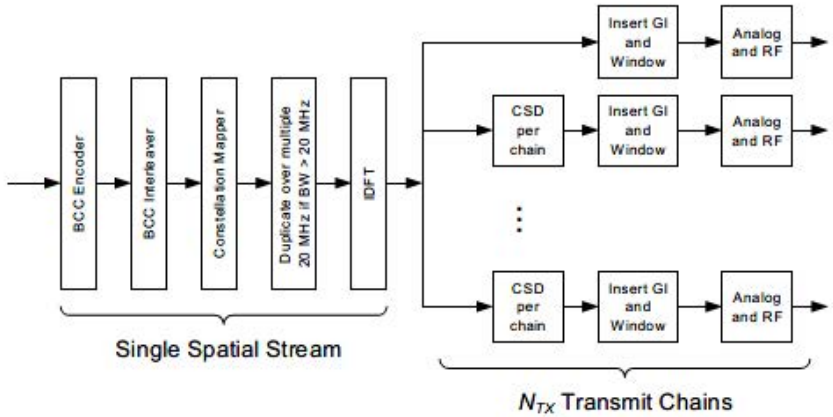 **Figure 27-13—Transmitter block diagram for L-SIG, RL-SIG, and HE-SIG-A fields for an HE SU PPDU and HE ER SU PPDU if Beam Change subfield is 1** It is anticipated that discovery will provide further details of the manner of infringement of the Accused Instrumentalities. In addition, the foregoing structures may be implemented in alternative configurations and usages that are equivalent to this claim element. In addition, the foregoing structures may be implemented in alternative configurations and usages that are equivalent to this claim element because they perform substantially the same function of transmission of the same header bits in the second OFDM symbol to provide diversity to increase a likelihood of correctly communicating header information of the second packet type, in substantially the same way of transmission of the same header bits in the second OFDM symbol to provide diversity to increase a likelihood of correctly communicating header information of the second packet type, to obtain the same result of providing additional diversity, reducing data loss and increasing decoding accuracy.

Appendix B
Claim Chart for U.S. Patent No. 9,973,361

Claim 2	Wi-Fi 6 Accused Instrumentalities
	For example, alternative equivalent configurations include the following, separately or in conjunction, which achieve the same functionalities provided by the claimed configurations: alternative configurations of HE PHY and PPDUs, including HE SU PPDU, HE MU PPDU, HE ER SU PPDU and HE TB PPDU; alternative configurations of the packet types or formats, headers fields, parts and bits, including HE-SIG-A, HE-SIG-A1, HE-SIG-A2, HE-SIG-A1-R, HE-SIG-A2-R, HE-SIG-B, HE-STF, HE-LTF, L-STF, L-LTF, L-SIG, RL-SIG and PE; alternative configurations of frequency and channel bands and bandwidth divisions, subdivisions, subchannels and subcarriers; alternative configurations of the HE STA, pre-HE [de]modulated and HE [de]modulated fields, transmitter, receiver, encoder, decoder, modulator and demodulator, and alternative symbols and symbol configuration, in transmitting, receiving, encoding, modulating or generating, including for alternative configurations for SU and/or MU.

Appendix B
Claim Chart for U.S. Patent No. 9,973,361

Claim 3	Wi-Fi 6 Accused Instrumentalities
The wireless transceiver of claim 1, wherein the transmission of the same header bits in the fourth OFDM symbol provides diversity to increase a likelihood of correctly communicating header information of the second packet type.	The Accused Instrumentalities comprise wherein the transmission of the same header bits in the fourth OFDM symbol provides diversity to increase a likelihood of correctly communicating header information of the second packet type. For example, Wi-Fi 6 devices comprise wherein the transmission of the same header bits in the fourth OFDM symbol provides diversity to increase a likelihood of correctly communicating header information of the second packet type. This is indicated below:[34]

[34]September 2015 Working Group Comments, IEEE Std 802.11-15/0826r2

Claim 3	Wi-Fi 6 Accused Instrumentalities
	Sept 2015 **doc.: IEEE 802.11-15/0826r2** **HE-SIGA transmission for range extension** **Date:** 2015-07-12 **Transmitter of HE-SIG-A** • **We propose to use the time repetition and bypassing the bit interleaver of repeated HE-SIG-A symbols to enhance robustness of HE-SIG-A in outdoor scenarios.** 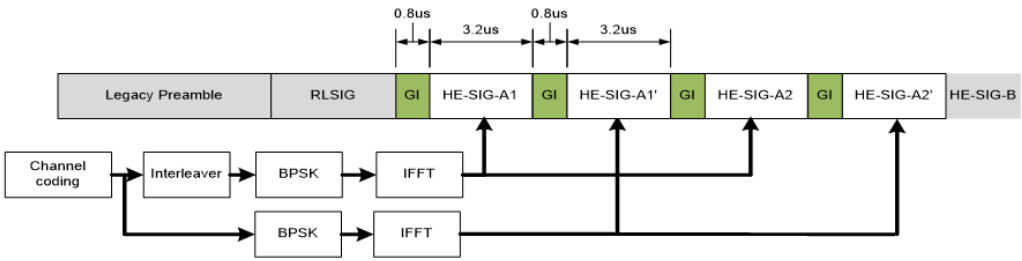

Claim 3	Wi-Fi 6 Accused Instrumentalities
	Conclusion • **Repeated HE-SIGA is needed in many use cases including range extension and outdoor channel operation.** • **An implementation friendly repetition method is proposed to harvest the frequency diversity gain.** These working group comments were adopted by the IEEE 802.11ax standard and are implemented by the Accused Instrumentalities. This is indicated below:[35] Example transmitter block diagrams are shown in Figure 27-13 to Figure 27-22. The actual structure of the transmitter is implementation dependent. In particular, Figure 27-13 shows the transmit process for the L-SIG, RL-SIG, and HE-SIG-A fields of an HE PPDU using one frequency segment when the Beam Change subfield in the HE-SIG-A field is 1. These transmit blocks are also used to generate the L-STF and L-LTF fields of the HE PPDU when the Beam Change subfield in the HE-SIG-A field is 1, with the following exceptions: — The BCC encoder and interleaver and the constellation mapper are not used when generating the L-STF and L-LTF fields. — The BCC interleaver is not applied in the 2nd and the 4th OFDM symbols of the HE-SIG-A field in the HE ER SU PPDU.

[35] IEEE Std 802.11ax-2021, Sec. 27.3.5.

Claim 3	Wi-Fi 6 Accused Instrumentalities
	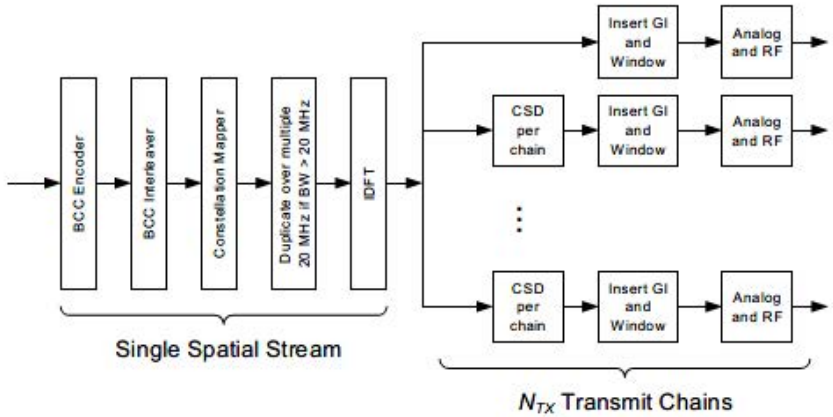 **Figure 27-13—Transmitter block diagram for L-SIG, RL-SIG, and HE-SIG-A fields for an HE SU PPDU and HE ER SU PPDU if Beam Change subfield is 1** It is anticipated that discovery will provide further details of the manner of infringement of the Accused Instrumentalities. In addition, the foregoing structures may be implemented in alternative configurations and usages that are equivalent to this claim element. In addition, the foregoing structures may be implemented in alternative configurations and usages that are equivalent to this claim element because they perform substantially the same function of transmission of the same header bits in the fourth OFDM symbol to provide diversity to increase a likelihood of correctly communicating header information of the second packet type, in substantially the same way of transmission of the same header bits in the fourth OFDM symbol to provide diversity to increase a likelihood of correctly communicating header information of the second packet type, to obtain the same result of providing additional diversity, reducing data loss and increasing decoding accuracy.

Appendix B
Claim Chart for U.S. Patent No. 9,973,361

Claim 3	Wi-Fi 6 Accused Instrumentalities
	For example, alternative equivalent configurations include the following, separately or in conjunction, which achieve the same functionalities provided by the claimed configurations: alternative configurations of HE PHY and PPDUs, including HE SU PPDU, HE MU PPDU, HE ER SU PPDU and HE TB PPDU; alternative configurations of the packet types or formats, headers fields, parts and bits, including HE-SIG-A, HE-SIG-A1, HE-SIG-A2, HE-SIG-A1-R, HE-SIG-A2-R, HE-SIG-B, HE-STF, HE-LTF, L-STF, L-LTF, L-SIG, RL-SIG and PE; alternative configurations of frequency and channel bands and bandwidth divisions, subdivisions, subchannels and subcarriers; alternative configurations of the HE STA, pre-HE [de]modulated and HE [de]modulated fields, transmitter, receiver, encoder, decoder, modulator and demodulator, and alternative symbols and symbol configuration, in transmitting, receiving, encoding, modulating or generating, including for alternative configurations for SU and/or MU.

Appendix B
Claim Chart for U.S. Patent No. 9,973,361

Claim 5	Wi-Fi 6 Accused Instrumentalities
The wireless transceiver of claim 1, wherein the wireless transceiver supports one or more wireless standards.	The Accused Instrumentalities comprise wherein the wireless transceiver supports one or more wireless standards. For example, the Accused Instrumentalities comprise a wireless transceiver that supports the IEEE 802.11ax standard, also known as WiFi 6. For example, Defendants advertise the Accused Instrumentalities as utilizing a Wi-Fi 6 or 802.11ax transceiver, such as a wireless card or modem, e.g., Wireless Intel Dual Band Wi-Fi 6 AX211 2x2 802.11ax 160MHz wireless card, and/or as Wi-Fi CERTIFIED 6.[36] [37] The standard requires that 802.11ax products be capable of transmitting and receiving PPDUs that are compliant with the mandatory requirements of the PHY specifications as follows:[38]

[36] *See, e.g.*, https://www.dell.com/en-us/shop/dell-laptops/sr/laptops/wi-fi-6?appliedRefinements=37766 (search results for laptops filtered by "Wi-Fi 6"); https://www.dell.com/en-us/shop/desktop-computers/sr/desktops/wi-fi-6?appliedRefinements=38804 (search results for desktops filtered by "Wi-Fi 6"); and https://www.dell.com/en-us/shop/dell-laptops/latitude-3520-laptop/spd/latitude-15-3520-laptop/s061l3520us (showing "Intel Dual Band Wi-Fi 6 AX201 2x2 802.11ax 160MHz + Bluetooth 5.1" for "Wireless" for the Latitude 3520 Laptop).

[37] *See, e.g.*, https://www.hp.com/us-en/shop/sitesearch?keyword=wi-fi%206 (search results for products with keyword "Wi-Fi 6"); https://www.hp.com/us-en/shop/pdp/hp-spectre-x360-2-in-1-laptop-16-f1747nr (showing "Intel® Wi-Fi 6E AX211 (2x2)" for the "Wireless Technology" of HP Spectre x360 2-in-1 Laptop 16-f1747nr); https://www.hp.com/us-en/shop/pdp/hp-envy-desktop-te02-0250xt-pc-3y3r0av-1 (showing "Realtek Wi-Fi 6 (2x2)" for the "Wireless Technology" of HP ENVY Desktop TE02-0250xt PC).

[38] IEEE Std 802.11ax-2021, Sec. 27.3.11.7.2

Claim 5	Wi-Fi 6 Accused Instrumentalities
	27. High-efficiency (HE) PHY specification **27.1 Introduction** **27.1.1 Introduction to the HE PHY** Clause 27 specifies the PHY entity for a high-efficiency (HE) orthogonal frequency division multiplexing (OFDM) system. In addition to the requirements in Clause 27, an HE STA shall be capable of transmitting and receiving PPDUs that are compliant with the mandatory requirements of the following PHY specifications: — Clause 19 and Clause 21 if the HE STA supports an operating channel width greater than or equal to 80 MHz and is operating in the 5 GHz band. — Clause 19 and Clause 21 transmission and reception on 20 MHz channel width (see 26.17.1) if the HE STA is a 20 MHz-only non-AP HE STA and is operating in the 5 GHz band. — Clause 19 if the HE STA is operating in the 2.4 GHz band. — Clause 17 if the HE STA is operating in the 6 GHz band. It is anticipated that discovery will provide further details of the manner of infringement of the Accused Instrumentalities. In addition, the foregoing structures may be implemented in alternative configurations and usages that are equivalent to this claim element. In addition, the foregoing structures may be implemented in alternative configurations and usages that are equivalent to this claim element because they perform substantially the same function of supporting one or more wireless standards, in substantially the same way of supporting one or more wireless standards, to obtain the same result of providing additional diversity, reducing data loss and increasing decoding accuracy. For example, alternative equivalent configurations include the following, separately or in conjunction, which achieve the same functionalities provided by the claimed configurations: alternative configurations of HE PHY and PPDUs, including HE SU PPDU, HE MU PPDU, HE ER SU PPDU and HE TB PPDU; alternative configurations of the packet types or

Claim 5	Wi-Fi 6 Accused Instrumentalities
	formats, headers fields, parts and bits, including HE-SIG-A, HE-SIG-A1, HE-SIG-A2, HE-SIG-A1-R, HE-SIG-A2-R, HE-SIG-B, HE-STF, HE-LTF, L-STF, L-LTF, L-SIG, RL-SIG and PE; alternative configurations of frequency and channel bands and bandwidth divisions, subdivisions, subchannels and subcarriers; alternative configurations of the HE STA, pre-HE [de]modulated and HE [de]modulated fields, transmitter, receiver, encoder, decoder, modulator and demodulator, and alternative symbols and symbol configuration, in transmitting, receiving, encoding, modulating or generating, including for alternative configurations for SU and/or MU.

<table>
<tr><th>Claim 7</th><th>Wi-Fi 6 Accused Instrumentalities</th></tr>
<tr><td>The wireless transceiver of claim 1, wherein the first header field indicates the type of packet.</td><td>
The Accused Instrumentalities comprise wherein the first header field indicates the type of packet.
For example, Wi-Fi 6 devices comprise wherein the first header field indicates the type of packet. This is indicated below:[39]
27.3.11.7.2 Content
The HE-SIG-A field for an HE SU PPDU or an HE ER SU PPDU contains the fields listed in Table 27-18.
Table 27-18—HE-SIG-A field of an HE SU PPDU and HE ER SU PPDU
<table>
<tr><th>Bit</th><th>Field</th><th>Number of bits</th><th>Description</th></tr>
<tr><td colspan="4">HE-SIG-A1 subfield of HE-SIG-A field</td></tr>
<tr><td>B0</td><td>Format</td><td>1</td><td>Differentiate an HE SU PPDU and HE ER SU PPDU from an HE TB PPDU:
Set to 1 for an HE SU PPDU and HE ER SU PPDU.</td></tr>
</table>
It is anticipated that discovery will provide further details of the manner of infringement of the Accused Instrumentalities.
In addition, the foregoing structures may be implemented in alternative configurations and usages that are equivalent to this claim element.
In addition, the foregoing structures may be implemented in alternative configurations and usages that are equivalent to this claim element because they perform substantially the same function of indicating the type of packet, in substantially the same way of indicating using a header bit, to obtain the same result of providing additional diversity, reducing data loss and increasing decoding accuracy.
</td></tr>
</table>

[39] IEEE Std 802.11ax-2021, Sec. 27.3.11.7.2

Appendix B
Claim Chart for U.S. Patent No. 9,973,361

Claim 7	Wi-Fi 6 Accused Instrumentalities
	For example, alternative equivalent configurations include the following, separately or in conjunction, which achieve the same functionalities provided by the claimed configurations: alternative configurations of HE PHY and PPDUs, including HE SU PPDU, HE MU PPDU, HE ER SU PPDU and HE TB PPDU; alternative configurations of the packet types or formats, headers fields, parts and bits, including HE-SIG-A, HE-SIG-A1, HE-SIG-A2, HE-SIG-A1-R, HE-SIG-A2-R, HE-SIG-B, HE-STF, HE-LTF, L-STF, L-LTF, L-SIG, RL-SIG and PE; alternative configurations of frequency and channel bands and bandwidth divisions, subdivisions, subchannels and subcarriers; alternative configurations of the HE STA, pre-HE [de]modulated and HE [de]modulated fields, transmitter, receiver, encoder, decoder, modulator and demodulator, and alternative symbols and symbol configuration, in transmitting, receiving, encoding, modulating or generating, including for alternative configurations for SU and/or MU.

<table>
<tr><th>Claim 8</th><th>Wi-Fi 6 Accused Instrumentalities</th></tr>
<tr><td>The wireless transceiver of claim 1, wherein the second header field indicates the type of packet.</td><td>
The Accused Instrumentalities comprise wherein the second header field indicates the type of packet.

For example, Wi-Fi 6 devices comprise wherein the second header field indicates the type of packet. This is indicated below:[40]

27.3.11.7.2 Content

The HE-SIG-A field for an HE SU PPDU or an HE ER SU PPDU contains the fields listed in Table 27-18.

Table 27-18—HE-SIG-A field of an HE SU PPDU and HE ER SU PPDU
<table>
<tr><th>Bit</th><th>Field</th><th>Number of bits</th><th>Description</th></tr>
<tr><td colspan="4">HE-SIG-A1 subfield of HE-SIG-A field</td></tr>
<tr><td>B0</td><td>Format</td><td>1</td><td>Differentiate an HE SU PPDU and HE ER SU PPDU from an HE TB PPDU:
Set to 1 for an HE SU PPDU and HE ER SU PPDU.</td></tr>
</table>
It is anticipated that discovery will provide further details of the manner of infringement of the Accused Instrumentalities.

In addition, the foregoing structures may be implemented in alternative configurations and usages that are equivalent to this claim element.

In addition, the foregoing structures may be implemented in alternative configurations and usages that are equivalent to this claim element because they perform substantially the same function of indicating the type of packet, in substantially the same way of indicating using a header bit, to
</td></tr>
</table>

[40] IEEE Std 802.11ax-2021, Sec. 27.3.11.7.2

Claim 8	Wi-Fi 6 Accused Instrumentalities
	obtain the same result of providing additional diversity, reducing data loss and increasing decoding accuracy. For example, alternative equivalent configurations include the following, separately or in conjunction, which achieve the same functionalities provided by the claimed configurations: alternative configurations of HE PHY and PPDUs, including HE SU PPDU, HE MU PPDU, HE ER SU PPDU and HE TB PPDU; alternative configurations of the packet types or formats, headers fields, parts and bits, including HE-SIG-A, HE-SIG-A1, HE-SIG-A2, HE-SIG-A1-R, HE-SIG-A2-R, HE-SIG-B, HE-STF, HE-LTF, L-STF, L-LTF, L-SIG, RL-SIG and PE; alternative configurations of frequency and channel bands and bandwidth divisions, subdivisions, subchannels and subcarriers; alternative configurations of the HE STA, pre-HE [de]modulated and HE [de]modulated fields, transmitter, receiver, encoder, decoder, modulator and demodulator, and alternative symbols and symbol configuration, in transmitting, receiving, encoding, modulating or generating, including for alternative configurations for SU and/or MU.

Appendix C
Claim Chart for U.S. Patent No. 10,079,707

Claim 1	Wi-Fi 6 Accused Instrumentalities
A wireless OFDM (Orthogonal Frequency Division Multiplexing) transceiver comprising:	The Accused Instrumentalities comprise a wireless OFDM (Orthogonal Frequency Division Multiplexing) transceiver that comprises the following technical elements and limitations, as described in the Wi-Fi 6 Standard. For example, devices that comply with the IEEE 802.11ax standard ("Wi-Fi 6") comprise a wireless OFDM (Orthogonal Frequency Division Multiplexing) transceiver. The citations herein to the Wi-Fi 6 standard are further illustrative of the technical specifications implemented in and/or embodied by the Accused Instrumentalities and applicable whether or not the Accused Instrumentalities are standard compliant. For example, Wi-Fi 6 devices comprise a wireless OFDM transceiver that is capable of transmitting and receiving ("transceiving") physical layer protocol data units (PPDUs). This is indicated below:[1]

[1] IEEE Std 802.11ax-2021, Sec. 27.1.1.

Claim 1	Wi-Fi 6 Accused Instrumentalities
	27. High-efficiency (HE) PHY specification **27.1 Introduction** **27.1.1 Introduction to the HE PHY** Clause 27 specifies the PHY entity for a high-efficiency (HE) orthogonal frequency division multiplexing (OFDM) system. In addition to the requirements in Clause 27, an HE STA shall be capable of transmitting and receiving PPDUs that are compliant with the mandatory requirements of the following PHY specifications: — Clause 19 and Clause 21 if the HE STA supports an operating channel width greater than or equal to 80 MHz and is operating in the 5 GHz band. — Clause 19 and Clause 21 transmission and reception on 20 MHz channel width (see 26.17.1) if the HE STA is a 20 MHz-only non-AP HE STA and is operating in the 5 GHz band. — Clause 19 if the HE STA is operating in the 2.4 GHz band. — Clause 17 if the HE STA is operating in the 6 GHz band. It is anticipated that discovery will provide further details of the manner of infringement of the Accused Instrumentalities. Upon information and belief, AX Wireless contends that these infringement contentions are equally applicable to all examples, aspects, applications, configurations, embodiments and instances of Defendants' Wi-Fi 6 devices.
a wireless OFDM communications receiver operable to receive, over a wireless communication channel, a first packet type comprising a first header	The Accused Instrumentalities comprise a wireless OFDM communications receiver operable to receive, over a wireless communication channel, a first packet type comprising a first header field, wherein the first header field comprises two parts, a first part comprising a first set of header bits of the first header field and a second part comprising a second set of header bits of the first header field, wherein the first set of header bits of the first header field is different than the second set of header bits of the first header field.

Claim 1	Wi-Fi 6 Accused Instrumentalities
field, wherein the first header field comprises two parts, a first part comprising a first set of header bits of the first header field and a second part comprising a second set of header bits of the first header field, wherein the first set of header bits of the first header field is different than the second set of header bits of the first header field; and	For example, Wi-Fi 6 devices comprise a wireless OFDM communications receiver operable to receive, over a wireless communication channel, a first packet type comprising a first header field, wherein the first header field comprises two parts, a first part comprising a first set of header bits of the first header field and a second part comprising a second set of header bits of the first header field, wherein the first set of header bits of the first header field is different than the second set of header bits of the first header field. Wi-Fi 6 devices comprise a wireless OFDM communications receiver operable to receive, over a wireless communication channel, a first packet type comprising a first header field. For example, Wi-Fi 6 devices comprise a high-efficiency (HE) station (STA) that can receive the high-efficiency single user physical layer protocol data unit (HE SU PPDU) format, among other PPDU formats:[2] The HE PHY provides support for midambles. Midambles facilitate updating of the channel estimate during HE PPDU reception and might be of use in high mobility scenarios that often result in significant variations of the wireless channel over the duration of a PPDU. An HE STA shall support the following features: — Transmission and reception of an HE SU PPDU that consists of a single RU spanning the entire PPDU bandwidth. See also:[3] **high-efficiency (HE) single-user (SU) physical layer (PHY) protocol data unit (PPDU) (HE SU PPDU):** A PPDU transmitted with HE SU PPDU format. This PPDU carries a single PHY service data unit (PSDU).

[2] IEEE Std 802.11ax-2021, Sec. 27.1.1.

[3] IEEE Std 802.11ax-2021, Sec. 3.2.

Claim 1	Wi-Fi 6 Accused Instrumentalities
	The HE SU PPDU is a first packet type comprising a first header field. For example, the HE SU PPDU comprises the HE-SIG-A field. This is indicated below:[4] **27.3.4 HE PPDU formats** Four HE PPDU formats are defined: HE SU PPDU, HE MU PPDU, HE ER SU PPDU, and HE TB PPDU. The HE sounding NDP is a variant of the HE SU PPDU and defined in 27.3.17. The HE TB feedback NDP is a variant of the HE TB PPDU and defined in 27.3.18. NOTE—The HE ER SU PPDU is not a variant of the HE SU PPDU. Requirements related to HE SU PPDUs and HE ER SU PPDUs are specified separately. The format of the HE SU PPDU is defined as in Figure 27-8. This PPDU format is used for SU transmission, and in this format, the HE-SIG-A field is not repeated. 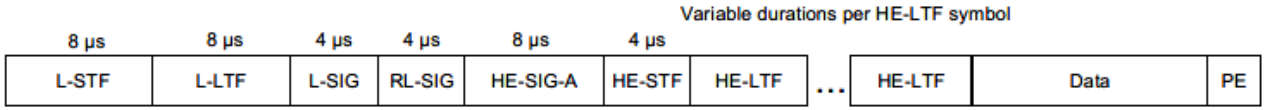 **Figure 27-8—HE SU PPDU format** See also:[5]

[4] IEEE Std 802.11ax-2021, Sec. 27.3.4.

[5] IEEE Std 802.11ax-2021, Sec. 27.3.4.

Claim 1	Wi-Fi 6 Accused Instrumentalities
	The fields of the HE PPDU formats are summarized in Table 27-11. **Table 27-11—HE PPDU fields** **Field** / **Description** L-STF — Non-HT Short Training field L-LTF — Non-HT Long Training field L-SIG — Non-HT SIGNAL field RL-SIG — Repeated Non-HT SIGNAL field HE-SIG-A — HE SIGNAL A field HE-SIG-B — HE SIGNAL B field HE-STF — HE Short Training field HE-LTF — HE Long Training field Data — The Data field carrying the PSDU(s) PE — Packet extension field The RL-SIG, HE-SIG-A, HE-STF, HE-LTF, and PE fields are present in all HE PPDU formats. The HE-SIG-B field is present only in the HE MU PPDU. The PE field is defined in 27.3.13. The L-STF, L-LTF, L-SIG, RL-SIG, HE-SIG-A, and HE-SIG-B fields are referred to as *pre-HE modulated fields*, while the HE-STF, HE-LTF, Data, and PE fields are referred to as *HE modulated fields*.

Claim 1	Wi-Fi 6 Accused Instrumentalities
	The first header field comprises two parts. For example, the HE-SIG-A field comprises two subfields, HE-SIG-A1 and HE-SIG-A2. This is indicated below:[6] **27.3.6.6 Construction of HE-SIG-A field** a) For an HE SU PPDU, HE MU PPDU, and HE TB PPDU, the HE-SIG-A field consists of two subfields, HE-SIG-A1 and HE-SIG-A2 as defined in 27.3.11.7, and is constructed as follows: 1) Obtain the HE-SIG-A field values from the TXVECTOR. Add the reserved bits, append the calculated CRC, and then append the N_{tail} tail bits as shown in 27.3.11.7. This results in 52 uncoded bits. 2) BCC encoder: Encode the data by a convolutional encoder at the rate $R = 1/2$ as described in 17.3.5.6. 3) BCC interleaver: Interleave as described in 27.3.12.8. 4) Constellation mapper: BPSK modulate the first 52 interleaved bits as described in 17.3.5.8 to form the first OFDM symbol of the HE-SIG-A field. BPSK modulate the second 52 interleaved bits to form the second OFDM symbol of the HE-SIG-A field. 5) Pilot insertion: Insert pilots as described in 17.3.5.9. 6) Duplicate and phase rotation: Duplicate the HE-SIG-A OFDM symbols over each occupied 20 MHz subchannel of the channel width. Apply the appropriate phase rotation for each occupied 20 MHz subchannel as described in 27.3.10 and 21.3.7.5. 7) CSD per STS: If the TXVECTOR parameter BEAM_CHANGE is 0, apply CSD per STS for each space-time stream and frequency segment as described in 27.3.11.2.2 before spatial mapping. 8) Spatial mapping: If the TXVECTOR parameter BEAM_CHANGE is 0, apply the A matrix and the Q matrix as described in 27.3.11.7.4. 9) IDFT: Compute the inverse discrete Fourier transform. 10) CSD per chain: If the TXVECTOR parameter BEAM_CHANGE is 1 or not present, apply CSD per chain for each transmit chain and frequency segment as described in 27.3.11.2.1. 11) GI and windowing: Prepend a GI ($T_{GI,\text{Pre-HE}}$), and apply windowing as described in 27.3.10. 12) Analog and RF: Upconvert the resulting complex baseband waveform associated with each transmit chain to an RF signal according to the center frequency of the desired channel and transmit. Refer to 27.3.10 and 27.3.11 for details.

[6] IEEE Std 802.11ax-2021, Sec. 27.3.6.6.

Claim 1	Wi-Fi 6 Accused Instrumentalities
	A first part comprises a first set of header bits of the first header field. For example, the HE-SIG-A1 subfield comprises a first set of header bits of HE-SIG-A. This is indicated below:[7]

27.3.11.7.2 Content

The HE-SIG-A field for an HE SU PPDU or an HE ER SU PPDU contains the fields listed in Table 27-18.

Table 27-18—HE-SIG-A field of an HE SU PPDU and HE ER SU PPDU

Bit	Field	Number of bits	Description
HE-SIG-A1 subfield of HE-SIG-A field			
B0	Format	1	Differentiate an HE SU PPDU and HE ER SU PPDU from an HE TB PPDU: Set to 1 for an HE SU PPDU and HE ER SU PPDU.
B1	Beam Change	1	Set to 1 to indicate that the pre-HE modulated fields of the PPDU may be spatially mapped differently from the first symbol of the HE-LTF. Equation (27-6), Equation (27-9), Equation (27-12), Equation (27-14), Equation (27-16), and Equation (27-18) apply if the Beam Change field is 1. Set to 0 to indicate that the pre-HE modulated fields of the PPDU are spatially mapped the same way as the first symbol of the HE-LTF on each subcarrier. Equation (27-8), Equation (27-10), Equation (27-13), Equation (27-15), Equation (27-17), and Equation (27-19) apply if the Beam Change field is 0.
B2	UL/DL	1	Indicates whether the PPDU is sent UL or DL. Set to 1 if the PPDU is addressed to an AP. Set to 0 otherwise. See TXVECTOR parameter UPLINK_FLAG.

[7] IEEE Std 802.11ax-2021, Sec. 27.3.11.7.2.

Claim 1	Wi-Fi 6 Accused Instrumentalities
	(cont.)

B3–B6	HE-MCS	4	For an HE SU PPDU: Set to *n* for HE-MCS *n*, where *n* = 0, 1, 2, …, 11. Values 12–15 are reserved. For an HE ER SU PPDU with Bandwidth field set to 0 (242-tone RU): Set to *n* for HE-MCS *n*, where *n* = 0, 1, 2. Values 3–15 are reserved. For an HE ER SU PPDU with Bandwidth field set to 1 (upper frequency 106-tone RU): Set to 0 for HE-MCS 0. Values 1–15 are reserved.
B7	DCM	1	Indicates whether DCM is applied to the Data field for the HE-MCS indicated. See Table 27-19 for the interpretation of this field. NOTE—DCM is applicable to only HE-MCSs 0, 1, 3, and 4. DCM is applicable to only 1 and 2 spatial streams.
B8–B13	BSS Color	6	An identifier of the BSS. See TXVECTOR parameter BSS_COLOR.

Claim 1	Wi-Fi 6 Accused Instrumentalities
	(cont.)

Table 27-18—HE-SIG-A field of an HE SU PPDU and HE ER SU PPDU *(continued)*

Bit	Field	Number of bits	Description
B14	Reserved	1	Reserved and set to 1.
B15–B18	Spatial Reuse	4	Indicates whether spatial reuse modes are allowed during the transmission of this PPDU: Set to a value from Table 27-22 (see 26.11.6 and 26.10).
B19–B20	Bandwidth	2	For an HE SU PPDU: Set to 0 for 20 MHz. Set to 1 for 40 MHz. Set to 2 for 80 MHz. Set to 3 for 160 MHz and 80+80 MHz. For an HE ER SU PPDU: Set to 0 for 242-tone RU. Set to 1 for upper frequency 106-tone RU within the primary 20 MHz. Values 2 and 3 are reserved.
B21–B22	GI+HE-LTF Size	2	Indicates the GI duration and HE-LTF size. See Table 27-19 for the interpretation of this field.
B23–B25	NSTS And Midamble Periodicity	3	If the Doppler field is 0, indicates the number of space-time streams. Set to the number of space-time streams minus 1. For an HE ER SU PPDU, values 2–7 are reserved. If the Doppler field is 1, then B23-B24 indicates the number of space time streams, up to 4, and B25 indicates the midamble periodicity. B23-B24 is set to the number of space time streams minus 1. For an HE ER SU PPDU, values 2 and 3 are reserved. B25 is set to 0 for 10 symbol midamble periodicity, to 1 for 20 symbol midamble periodicity. See TXVECTOR parameter MIDAMBLE_PERIODICITY.

Claim 1	Wi-Fi 6 Accused Instrumentalities
	A second part comprises a second set of header bits of the first header field. For example, the HE-SIG-A2 subfield comprises a second set of header bits of HE-SIG-A. This is indicated below:[8]

Bit	Field	Number of bits	Description
HE-SIG-A2 subfield of HE-SIG-A field			
B0–B6	TXOP	7	Set to 127 to indicate no duration information. Set to a value less than 127 to indicate the closest minimum bound on the duration information for NAV setting and protection of the TXOP as follows: If B0 is 0, the TXOP duration indicated is B1-B6, in units of 8 µs. If B0 is 1, the TXOP duration indicated is B1-B6, in units of 128 µs, plus 512 µs. See TXVECTOR parameter TXOP_DURATION.
B7	Coding	1	Indicates whether BCC or LDPC is used: Set to 0 to indicate BCC Set to 1 to indicate LDPC
B8	LDPC Extra Symbol Segment	1	Indicates the presence of the LDPC extra symbol segment: Set to 1 if an LDPC extra symbol segment is present. Set to 0 if an LDPC extra symbol segment is not present. Reserved and set to 1 if the Coding field is 0.
B9	STBC	1	Indicates whether STBC is applied to the Data field. See Table 27-19 for the interpretation of this field.

[8] IEEE Std 802.11ax-2021, Sec. 27.3.11.7.2.

Claim 1	Wi-Fi 6 Accused Instrumentalities
	(cont.) **Table 27-18—HE-SIG-A field of an HE SU PPDU and HE ER SU PPDU *(continued)*** **Bit** / **Field** / **Number of bits** / **Description** B10 / Beamformed / 1 / Set to 1 if a beamforming steering matrix is applied to the HE modulated fields. Set to 0 otherwise. B11–B12 / Pre-FEC Padding Factor / 2 / Indicates the pre-FEC padding factor: Set to 0 to indicate a pre-FEC padding factor of 4. Set to 1 to indicate a pre-FEC padding factor of 1. Set to 2 to indicate a pre-FEC padding factor of 2. Set to 3 to indicate a pre-FEC padding factor of 3. B13 / PE Disambiguity / 1 / Indicates PE disambiguity as defined in 27.3.13. B14 / Reserved / 1 / Reserved and set to 1. B15 / Doppler / 1 / Set to 1 if one of the following applies: — The number of OFDM symbols in the Data field is larger than the signaled midamble periodicity plus 1 and the midamble is present. — The number of OFDM symbols in the Data field is less than or equal to the signaled midamble periodicity plus 1 (see 27.3.12.16, the midamble is not present, but the channel is fast varying. It recommends that midamble may be used for the PPDUs of the reverse link. Set to 0 otherwise. B16–B19 / CRC / 4 / CRC for bits 0–41 of the HE-SIG-A field (see 27.3.11.7.3). Bits 0–41 of the HE-SIG-A field correspond to bits 0–25 of the HE-SIG-A1 subfield followed by bits 0–15 of the HE-SIG-A2 subfield. B20–B25 / Tail / 6 / Used to terminate the trellis of the convolutional decoder. Set to 0. As shown above, the first set of header bits of the first header field (HE-SIG-A1) is different than the second set of header bits of the first header field (HE-SIG-A2).

Claim 1	Wi-Fi 6 Accused Instrumentalities
	It is anticipated that discovery will provide further details of the manner of infringement of the Accused Instrumentalities. In addition, the foregoing structures may be implemented in alternative configurations and usages that are equivalent to this claim element. In addition, the foregoing structures may be implemented in alternative configurations and usages that are equivalent to this claim element because they perform substantially the same function of receiving, over a wireless communication channel, a first packet type comprising a first header field, wherein the first header field comprises two parts, a first part comprising a first set of header bits of the first header field and a second part comprising a second set of header bits of the first header field, wherein the first set of header bits of the first header field is different than the second set of header bits of the first header field, in substantially the same way of receiving, over a wireless communication channel, a first packet type comprising a first header field, wherein the first header field comprises two parts, a first part comprising a first set of header bits of the first header field and a second part comprising a second set of header bits of the first header field, wherein the first set of header bits of the first header field is different than the second set of header bits of the first header field, to obtain the same result of providing additional diversity, reducing data loss and increasing decoding accuracy. For example, alternative equivalent configurations include the following, separately or in conjunction, which achieve the same functionalities provided by the claimed configurations: alternative configurations of HE PHY and PPDUs, including HE SU PPDU, HE MU PPDU, HE ER SU PPDU and HE TB PPDU; alternative configurations of the packet types or formats, headers fields, parts and bits, including HE-SIG-A, HE-SIG-A1, HE-SIG-A2, HE-SIG-A1-R, HE-SIG-A2-R, HE-SIG-B, HE-STF, HE-LTF, L-STF, L-LTF, L-SIG, RL-SIG and PE; alternative configurations of frequency and channel bands and bandwidth divisions, subdivisions, subchannels and subcarriers; alternative configurations of the HE STA, pre-HE [de]modulated and HE [de]modulated fields, transmitter, receiver, encoder, decoder, modulator and demodulator, and alternative symbols and symbol configuration, in transmitting, receiving, encoding, modulating or generating, including for alternative configurations for SU and/or MU.

Claim 1	Wi-Fi 6 Accused Instrumentalities
a demodulator operable to demodulate a first OFDM symbol followed by a second OFDM symbol, wherein the first OFDM symbol is used to receive the first part of the first header field and the second OFDM symbol is used to receive the second part of the first header field;	The Accused Instrumentalities comprise a demodulator operable to demodulate a first OFDM symbol followed by a second OFDM symbol, wherein the first OFDM symbol is used to receive the first part of the first header field and the second OFDM symbol is used to receive the second part of the first header field. For example, Wi-Fi 6 devices comprise a demodulator operable to demodulate a first OFDM symbol followed by a second OFDM symbol, wherein the first OFDM symbol is used to receive the first part of the first header field and the second OFDM symbol is used to receive the second part of the first header field. This is indicated below:[9] **27.3.6.6 Construction of HE-SIG-A field** a) For an HE SU PPDU, HE MU PPDU, and HE TB PPDU, the HE-SIG-A field consists of two subfields, HE-SIG-A1 and HE-SIG-A2 as defined in 27.3.11.7, and is constructed as follows: 1) Obtain the HE-SIG-A field values from the TXVECTOR. Add the reserved bits, append the calculated CRC, and then append the N_{tail} tail bits as shown in 27.3.11.7. This results in 52 uncoded bits. 2) BCC encoder: Encode the data by a convolutional encoder at the rate $R = 1/2$ as described in 17.3.5.6. 3) BCC interleaver: Interleave as described in 27.3.12.8. 4) Constellation mapper: BPSK modulate the first 52 interleaved bits as described in 17.3.5.8 to form the first OFDM symbol of the HE-SIG-A field. BPSK modulate the second 52 interleaved bits to form the second OFDM symbol of the HE-SIG-A field.

[9] IEEE Std 802.11ax-2021, Sec. 27.3.6.6.

Claim 1	Wi-Fi 6 Accused Instrumentalities
	(cont.) 5) Pilot insertion: Insert pilots as described in 17.3.5.9. 6) Duplicate and phase rotation: Duplicate the HE-SIG-A OFDM symbols over each occupied 20 MHz subchannel of the channel width. Apply the appropriate phase rotation for each occupied 20 MHz subchannel as described in 27.3.10 and 21.3.7.5. 7) CSD per STS: If the TXVECTOR parameter BEAM_CHANGE is 0, apply CSD per STS for each space-time stream and frequency segment as described in 27.3.11.2.2 before spatial mapping. 8) Spatial mapping: If the TXVECTOR parameter BEAM_CHANGE is 0, apply the A matrix and the Q matrix as described in 27.3.11.7.4. 9) IDFT: Compute the inverse discrete Fourier transform. 10) CSD per chain: If the TXVECTOR parameter BEAM_CHANGE is 1 or not present, apply CSD per chain for each transmit chain and frequency segment as described in 27.3.11.2.1. 11) GI and windowing: Prepend a GI ($T_{GI,\text{Pre-HE}}$), and apply windowing as described in 27.3.10. 12) Analog and RF: Upconvert the resulting complex baseband waveform associated with each transmit chain to an RF signal according to the center frequency of the desired channel and transmit. Refer to 27.3.10 and 27.3.11 for details.

Claim 1	Wi-Fi 6 Accused Instrumentalities
	See also:[10] **27.3.11.7.4 Encoding and modulation** For an HE SU PPDU, HE MU PPDU, and HE TB PPDU, the HE-SIG-A field is composed of two subfields, HE-SIG-A1 and HE-SIG-A2, each containing 26 data bits. The HE-SIG-A1 subfield is transmitted before the HE-SIG-A2 subfield. The data bits of the HE-SIG-A OFDM symbols shall be BCC encoded at rate $R = 1/2$, be interleaved, be mapped to a BPSK constellation, and have pilots inserted following the steps described in 17.3.5.6, 27.3.12.8, 17.3.5.8, and 17.3.5.9, respectively. The constellation mappings of the HE-SIG-A field in an HE SU PPDU, HE MU PPDU, and HE TB PPDU are shown in Figure 27-25. The first half and second half of the stream of 104 complex numbers generated by these steps (before pilot insertion) are divided into two groups of 52 complex numbers, where the first 52 complex numbers form the first OFDM symbol of the HE-SIG-A field and the second 52 complex numbers form the second OFDM symbol of the HE-SIG-A field, respectively. If the TXVECTOR parameter BEAM_CHANGE is 1 or not present, the time domain waveform for the HE-SIG-A field of an HE SU PPDU, HE MU PPDU, and HE TB PPDU, transmitted on frequency segment i_{Seg} and transmit chain i_{TX}, shall be as specified in Equation (27-16). $$r_{\text{HE-SIG-A}}^{(i_{Seg} i_{TX})}(t) = \frac{1}{\sqrt{N_{TX} \cdot N_{\text{HE-SIG-A}}^{\text{Tone}} \cdot \frac{\lvert\Omega_{20\text{MHz}}\rvert}{N_{20\text{MHz}}}}} \sum_{n=0}^{1} w_{T_{SYML}}(t - nT_{SYML}) \sum_{i_{BW} \in \Omega_{20\text{MHz}}} \sum_{k=-28}^{28} \eta_{\text{HE-SIG-A},k} \left(\begin{array}{l} \Upsilon_{(k - K_{\text{Shift}}(i_{BW})),\,\text{BW}}(D_{k,n,20} + p_{n+2} P_k) \\ \cdot \exp(j2\pi(k - K_{\text{Shift}}(i_{\text{BW}}))\Delta_{F,\,\text{Pre-HE}}(t - nT_{SYML} - T_{GI,\,\text{Pre-HE}} - T_{CS}^{i_{TX}})) \end{array} \right) \quad (27\text{-}16)$$

[10] IEEE Std 802.11ax-2021, Sec. 27.3.11.7.4.

Claim 1	Wi-Fi 6 Accused Instrumentalities
	(cont.) where T_{SYML} is given in Table 27-12 $K_{\text{Shift}}(i) = (N_{20\text{MHz}} - 1 - 2i) \cdot 32$ $D_{k,n,20} = \begin{cases} 0, k = 0, \pm 7, \pm 21 \\ d_{M^r_{20}(k),n}, \text{ otherwise} \end{cases}$ $M^r_{20}(k) = \begin{cases} k+28, -28 \le k \le -22 \\ k+27, -20 \le k \le -8 \\ k+26, -6 \le k \le -1 \\ k+25, 1 \le k \le 6 \\ k+24, 8 \le k \le 20 \\ k+23, 22 \le k \le 28 \end{cases}$ $\eta_{\text{HE-SIG-A},k} = \begin{cases} \left[\frac{1}{\sqrt{2}}, 1\right], \text{ for an HE TB PPDU} \\ 1, \text{ otherwise} \end{cases}$ P_k and p_n are defined in 17.3.5.10 $N^{\text{Tone}}_{\text{HE-SIG-A}}$ is defined in Table 27-16 $T^{i_{TX}}_{CS}$ represents the cyclic shift for transmit chain i_{TX} with a value given in 27.3.11.2.1

Claim 1	Wi-Fi 6 Accused Instrumentalities
	(cont.) If the TXVECTOR parameter BEAM_CHANGE is 0, the time domain waveform of the HE-SIG-A field shall be as given by Equation (27-17). $$r_{\text{HE-SIG-A}}^{(i_{Seg}, i_{TX})}(t) = \frac{1}{\sqrt{N_{STS} \cdot N_{\text{HE-SIG-A}}^{\text{Tone}} \cdot \frac{\lvert\Omega_{20\text{MHz}}\rvert}{N_{20\text{MHz}}}}} \sum_{n=0}^{1} w_{T_{SYML}}(t - nT_{SYML}) \quad (27\text{-}17)$$ $$\sum_{i_{BW}=0}^{N_{20\text{MHz}}-1} \sum_{k=-28}^{28} \sum_{m=1}^{N_{STS}} \left(\left[Q_{4(k-K_{\text{Shift}}(i_{BW}))}^{(i_{Seg})} \right]_{i_{TX}, m} \left[A_{\text{HE-LTF}}^{4(k-K_{\text{Shift}}(i_{BW}))} \right]_{m,1} (D_{k,n,20} + p_{n+2} P_k) \cdot \exp(j2\pi(k - K_{\text{Shift}}(i_{\text{BW}}))\Delta_{F,\text{Pre-HE}}(t - nT_{SYML} - T_{\text{GI, Pre-HE}} - T_{CS,HE}(m))) \right)$$ where $T_{CS,\text{HE}}(m)$ represents the cyclic shift for space-time stream m as defined in 27.3.11.2.2 $Q_k^{(i_{Seg})}$ is defined in 27.3.10 $A_{\text{HE-LTF}}^k$ is defined in Equation (27-55)

Claim 1	Wi-Fi 6 Accused Instrumentalities
	See also:[11] 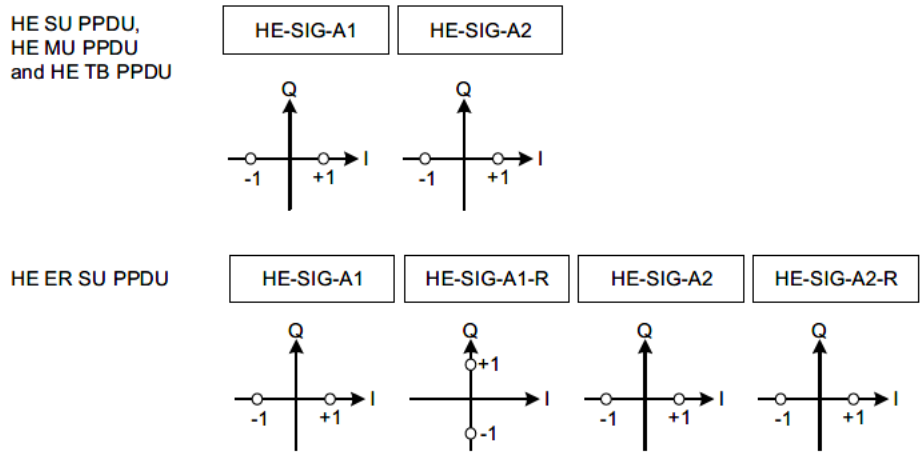 **Figure 27-25—Data subcarrier constellation of HE-SIG-A symbols**

[11] IEEE Std 802.11ax-2021, Sec. 27.3.11.7.4.

Claim 1	Wi-Fi 6 Accused Instrumentalities
	See also:[12] **27.3 HE PHY** **27.3.1 Introduction** Subclause 27.3 provides the procedure by which PSDUs are converted to and from transmissions on the wireless medium. During transmission, a PSDU (in the SU case) or one or more PSDUs (in the MU case) are processed (i.e., scrambled and coded) and appended to the PHY preamble to create the PPDU. At the receiver, the PHY preamble is processed to aid in the detection, demodulation, and delivery of the PSDU. It is anticipated that discovery will provide further details of the manner of infringement of the Accused Instrumentalities. In addition, the foregoing structures may be implemented in alternative configurations and usages that are equivalent to this claim element. In addition, the foregoing structures may be implemented in alternative configurations and usages that are equivalent to this claim element because they perform substantially the same function of demodulating a first OFDM symbol followed by a second OFDM symbol, wherein the first OFDM symbol is used to receive the first part of the first header field and the second OFDM symbol is used to receive the second part of the first header field, in substantially the same way of demodulating a first OFDM symbol followed by a second OFDM symbol, wherein the first OFDM symbol is used to receive the first part of the first header field and the second OFDM symbol is used to receive the second part of the first header field, to obtain the same result of providing additional diversity, reducing data loss and increasing decoding accuracy. For example, alternative equivalent configurations include the following, separately or in conjunction, which achieve the same functionalities provided by the claimed

[12] IEEE Std 802.11ax-2021, Sec. 27.3.1.

Claim 1	Wi-Fi 6 Accused Instrumentalities
	configurations: alternative configurations of HE PHY and PPDUs, including HE SU PPDU, HE MU PPDU, HE ER SU PPDU and HE TB PPDU; alternative configurations of the packet types or formats, headers fields, parts and bits, including HE-SIG-A, HE-SIG-A1, HE-SIG-A2, HE-SIG-A1-R, HE-SIG-A2-R, HE-SIG-B, HE-STF, HE-LTF, L-STF, L-LTF, L-SIG, RL-SIG and PE; alternative configurations of frequency and channel bands and bandwidth divisions, subdivisions, subchannels and subcarriers; alternative configurations of the HE STA, pre-HE [de]modulated and HE [de]modulated fields, transmitter, receiver, encoder, decoder, modulator and demodulator, and alternative symbols and symbol configuration, in transmitting, receiving, encoding, modulating or generating, including for alternative configurations for SU and/or MU..
the wireless OFDM communications receiver further operable to receive, over the wireless communications channel, a second packet type comprising a second header field, wherein the second header field comprises four parts, a first part comprising a first set of header bits of the second header field, a second part comprising a second set of header bits of the second header field, a third part comprising a third set of header bits of the second header field and a fourth part comprising a fourth set of	The Accused Instrumentalities comprise the wireless OFDM communications receiver further operable to receive, over the wireless communications channel, a second packet type comprising a second header field, wherein the second header field comprises four parts, a first part comprising a first set of header bits of the second header field, a second part comprising a second set of header bits of the second header field, a third part comprising a third set of header bits of the second header field and a fourth part comprising a fourth set of header bits of the second header field,. For example, Wi-Fi 6 devices comprise the wireless OFDM communications receiver further operable to receive, over the wireless communications channel, a second packet type comprising a second header field, wherein the second header field comprises four parts, a first part comprising a first set of header bits of the second header field, a second part comprising a second set of header bits of the second header field, a third part comprising a third set of header bits of the second header field and a fourth part comprising a fourth set of header bits of the second header field. For example, Wi-Fi 6 comprises high-efficiency stations (HE STAs) capable of receiving PPDUs via 2.4, 5, and 6 Ghz channels. This is indicated below:[13]

[13] IEEE Std 802.11ax-2021, Sec. 27.1.1.

Claim 1	Wi-Fi 6 Accused Instrumentalities
header bits of the second header field,	**27. High-efficiency (HE) PHY specification** **27.1 Introduction** **27.1.1 Introduction to the HE PHY** Clause 27 specifies the PHY entity for a high-efficiency (HE) orthogonal frequency division multiplexing (OFDM) system. In addition to the requirements in Clause 27, an HE STA shall be capable of transmitting and receiving PPDUs that are compliant with the mandatory requirements of the following PHY specifications: — Clause 19 and Clause 21 if the HE STA supports an operating channel width greater than or equal to 80 MHz and is operating in the 5 GHz band. — Clause 19 and Clause 21 transmission and reception on 20 MHz channel width (see 26.17.1) if the HE STA is a 20 MHz-only non-AP HE STA and is operating in the 5 GHz band. — Clause 19 if the HE STA is operating in the 2.4 GHz band. — Clause 17 if the HE STA is operating in the 6 GHz band. For 2.4 GHz band operation, the HE PHY is based on HT PHY defined in Clause 19, which in turn is based on the OFDM PHY defined in Clause 17. For 5 GHz band operation, the HE PHY is based on the VHT PHY defined in Clause 21, which in turn is based on the HT PHY defined in Clause 19, which in turn is further based on the OFDM PHY defined in Clause 17. For 6 GHz band operation, the HE PHY is based on the OFDM PHY defined in Clause 17.

Claim 1	Wi-Fi 6 Accused Instrumentalities
	Wi-Fi 6 devices comprise the wireless OFDM communications transmitter further operable to receive, over the wireless communications channel, a second packet type comprising a second header field. For example, Wi-Fi 6 devices can receive the high-efficiency extended range single-user PPDU (HE ER SU PPDU) (second packet type), in addition to the HE SU PPDU (first packet type):[14] An HE STA shall support the following features: — Transmission and reception of an HE SU PPDU that consists of a single RU spanning the entire PPDU bandwidth. — Transmission and reception of an HE ER SU PPDU that consists of a 242-tone RU spanning the entire primary 20 MHz PPDU bandwidth. See also:[15] **high-efficiency (HE) extended range (ER) single-user (SU) physical layer (PHY) protocol data unit (PPDU) (HE ER SU PPDU):** A PPDU transmitted with HE ER SU PPDU format. This PPDU carries a single PHY service data unit (PSDU).

[14] IEEE Std 802.11ax-2021, Sec. 27.1.1.

[15] IEEE Std 802.11ax-2021, Sec. 3.2.

Claim 1	Wi-Fi 6 Accused Instrumentalities
	The second packet type comprises a second header field. For example, the HE ER SU PPDU comprises an HE-SIG-A field:[16] The format of the HE ER SU PPDU is defined as in Figure 27-10. This format is used for SU transmission, and in this format, the HE-SIG-A field is twice as long as the HE-SIG-A field in other HE PPDU formats. 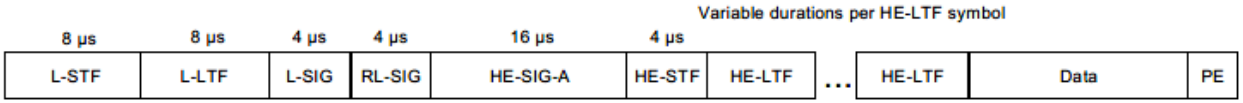 **Figure 27-10—HE ER SU PPDU format** The second header field comprises four parts, a first part comprising a first set of header bits of the second header field, a second part comprising a second set of header bits of the second header field, a third part comprising a third set of header bits of the second header field and a fourth part comprising a fourth set of header bits of the second header field.

[16] IEEE Std 802.11ax-2021, Sec. 27.3.4.

	For example, the HE-SIG-A field in the HE ER SU PPDU comprises four subfields, HE-SIG-A1, HE-SIG-A1-R, HE-SIG-A2, and HE-SIG-A2-R:[17] b) For an HE ER SU PPDU, the HE-SIG-A field consists of four subfields: HE-SIG-A1, HE-SIG-A1-R, HE-SIG-A2, and HE-SIG-A2-R. The HE-SIG-A1 and HE-SIG-A1-R subfields have the same data bits while the HE-SIG-A2 and HE-SIG-A2-R subfields have the same data bits as defined in 27.3.11.7. The HE-SIG-A field is constructed as follows: 1) Obtain the HE-SIG-A fields from the TXVECTOR. Add the reserved bits, append the calculated CRC, and then append the N_{tail} tail bits as shown in 27.3.11.7. This results in 52 uncoded bits. 2) BCC encoder: Encode the data by a convolutional encoder at the rate $R = 1/2$ as described in 17.3.5.6. 3) BCC interleaver: Interleave the data bits of the HE-SIG-A1 and HE-SIG-A2 subfields as described in 27.3.12.8. The data bits of the HE-SIG-A1-R and HE-SIG-A2-R subfields are not interleaved. 4) Constellation mapper: BPSK modulate the HE-SIG-A1, HE-SIG-A2, and HE-SIG-A2-R data bits as described in 17.3.5.8 to form the first, third, and fourth OFDM symbol of the HE-SIG-A field, respectively. QBPSK modulate the HE-SIG-A1-R encoded data bits to form the second OFDM symbol of the HE-SIG-A field. 5) Pilot insertion: Insert pilots as described in 17.3.5.9. 6) Duplication and phase rotation: Duplicate the HE-SIG-A field over each occupied 20 MHz subchannel of the channel bandwidth. Apply appropriate phase rotation for each occupied 20 MHz subchannel as described in 27.3.10 and 21.3.7.5. 7) CSD per STS: If the TXVECTOR parameter BEAM_CHANGE is 0, apply CSD per STS for each space-time stream and frequency segment as described in 27.3.11.2.2 before spatial mapping. 8) Spatial mapping: If the TXVECTOR parameter BEAM_CHANGE is 0, apply the A matrix and the Q matrix as described in 27.3.11.7.4. 9) IDFT: Compute the inverse Fourier transform. 10) CSD per chain: If the TXVECTOR parameter BEAM_CHANGE is 1 or not present, apply CSD per chain for each transmit chain and frequency segment as described in 27.3.11.2.1. 11) GI and windowing: Prepend a GI ($T_{GI,\text{Pre-HE}}$), and apply windowing as described in 27.3.10. 12) Analog and RF: Upconvert the resulting complex baseband waveform associated with each transmit chain to an RF signal according to the center frequency of the desired channel and transmit. Refer to 27.3.10 and 27.3.11 for details.

Claim 1	Wi-Fi 6 Accused Instrumentalities
	HE-SIG-A1 comprises a first set of header bits of HE-SIG-A, HE-SIG-A1-R comprises a second set of header bits of HE-SIG-A, HE-SIG-A2 comprises a third set of header bits of HE-SIG-A and HE-SIG-A2-R comprises a fourth set of header bits of HE-SIG-A. This is indicated below:[18] For an HE ER SU PPDU, the HE-SIG-A field is composed of four subfields: HE-SIG-A1, HE-SIG-A1-R, HE-SIG-A2, and HE-SIG-A2-R. Each subfield contains 26 data bits. These four subfields are transmitted sequentially from HE-SIG-A1 to HE-SIG-A2-R. The data bits of the HE-SIG-A1 and HE-SIG-A2 subfields shall be BCC encoded at rate $R = 1/2$, be interleaved, be mapped to a BPSK constellation, and have pilots inserted. The HE-SIG-A1-R subfield has the same encoded bits as the HE-SIG-A1 subfield, and the encoded bits shall be mapped to a QBPSK constellation without interleaving and have pilots inserted. The constellation mappings of the HE-SIG-A field in an HE ER SU PPDU are shown in Figure 27-25. The QBPSK constellation on the HE-SIG-A1-R subfield is used to differentiate between an HE ER SU PPDU and an HE MU PPDU when $m = 1$ in Equation (27-11). The HE-SIG-A2-R subfield has the same encoded bits as the HE-SIG-A2 subfield, and the encoded bits shall be mapped to a BPSK constellation without interleaving and have pilots inserted. BCC encoding, data interleaving, constellation mapping, and pilot insertion follow the steps described in 17.3.5.6, 27.3.12.8, 17.3.5.8, and 17.3.5.9, respectively. 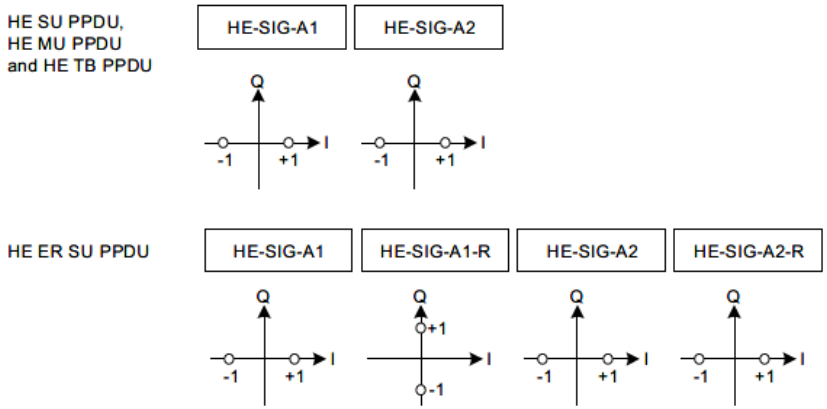 **Figure 27-25—Data subcarrier constellation of HE-SIG-A symbols**

[17] IEEE Std 802.11ax-2021, Sec. 27.3.6.6.

[18] IEEE Std 802.11ax-2021, Sec. 27.3.11.4.

Claim 1	Wi-Fi 6 Accused Instrumentalities
	See also:[19]

Table 27-18—HE-SIG-A field of an HE SU PPDU and HE ER SU PPDU

Bit	Field	Number of bits	Description
HE-SIG-A1 subfield of HE-SIG-A field			
B0	Format	1	Differentiate an HE SU PPDU and HE ER SU PPDU from an HE TB PPDU: Set to 1 for an HE SU PPDU and HE ER SU PPDU.
B1	Beam Change	1	Set to 1 to indicate that the pre-HE modulated fields of the PPDU may be spatially mapped differently from the first symbol of the HE-LTF. Equation (27-6), Equation (27-9), Equation (27-12), Equation (27-14), Equation (27-16), and Equation (27-18) apply if the Beam Change field is 1. Set to 0 to indicate that the pre-HE modulated fields of the PPDU are spatially mapped the same way as the first symbol of the HE-LTF on each subcarrier. Equation (27-8), Equation (27-10), Equation (27-13), Equation (27-15), Equation (27-17), and Equation (27-19) apply if the Beam Change field is 0.
B2	UL/DL	1	Indicates whether the PPDU is sent UL or DL. Set to 1 if the PPDU is addressed to an AP. Set to 0 otherwise. See TXVECTOR parameter UPLINK_FLAG.
B3–B6	HE-MCS	4	For an HE SU PPDU: Set to n for HE-MCS n, where n = 0, 1, 2, …, 11. Values 12–15 are reserved. For an HE ER SU PPDU with Bandwidth field set to 0 (242-tone RU): Set to n for HE-MCS n, where n = 0, 1, 2. Values 3–15 are reserved. For an HE ER SU PPDU with Bandwidth field set to 1 (upper frequency 106-tone RU): Set to 0 for HE-MCS 0. Values 1–15 are reserved.
B7	DCM	1	Indicates whether DCM is applied to the Data field for the HE-MCS indicated. See Table 27-19 for the interpretation of this field. NOTE—DCM is applicable to only HE-MCSs 0, 1, 3, and 4. DCM is applicable to only 1 and 2 spatial streams.
B8–B13	BSS Color	6	An identifier of the BSS. See TXVECTOR parameter BSS_COLOR.

[19] IEEE Std 802.11ax-2021, Sec. 27.3.11.7.2

Claim 1	Wi-Fi 6 Accused Instrumentalities

Table 27-18—HE-SIG-A field of an HE SU PPDU and HE ER SU PPDU *(continued)*

Bit	Field	Number of bits	Description
B14	Reserved	1	Reserved and set to 1.
B15–B18	Spatial Reuse	4	Indicates whether spatial reuse modes are allowed during the transmission of this PPDU: Set to a value from Table 27-22 (see 26.11.6 and 26.10).
B19–B20	Bandwidth	2	For an HE SU PPDU: Set to 0 for 20 MHz. Set to 1 for 40 MHz. Set to 2 for 80 MHz. Set to 3 for 160 MHz and 80+80 MHz. For an HE ER SU PPDU: Set to 0 for 242-tone RU. Set to 1 for upper frequency 106-tone RU within the primary 20 MHz. Values 2 and 3 are reserved.
B21–B22	GI+HE-LTF Size	2	Indicates the GI duration and HE-LTF size. See Table 27-19 for the interpretation of this field.
B23–B25	NSTS And Midamble Periodicity	3	If the Doppler field is 0, indicates the number of space-time streams. Set to the number of space-time streams minus 1. For an HE ER SU PPDU, values 2–7 are reserved. If the Doppler field is 1, then B23-B24 indicates the number of space time streams, up to 4, and B25 indicates the midamble periodicity. B23-B24 is set to the number of space time streams minus 1. For an HE ER SU PPDU, values 2 and 3 are reserved. B25 is set to 0 for 10 symbol midamble periodicity, to 1 for 20 symbol midamble periodicity. See TXVECTOR parameter MIDAMBLE_PERIODICITY.
HE-SIG-A2 subfield of HE-SIG-A field			
B0–B6	TXOP	7	Set to 127 to indicate no duration information. Set to a value less than 127 to indicate the closest minimum bound on the duration information for NAV setting and protection of the TXOP as follows: If B0 is 0, the TXOP duration indicated is B1-B6, in units of 8 µs. If B0 is 1, the TXOP duration indicated is B1-B6, in units of 128 µs, plus 512 µs. See TXVECTOR parameter TXOP_DURATION.
B7	Coding	1	Indicates whether BCC or LDPC is used: Set to 0 to indicate BCC Set to 1 to indicate LDPC
B8	LDPC Extra Symbol Segment	1	Indicates the presence of the LDPC extra symbol segment: Set to 1 if an LDPC extra symbol segment is present. Set to 0 if an LDPC extra symbol segment is not present. Reserved and set to 1 if the Coding field is 0.
B9	STBC	1	Indicates whether STBC is applied to the Data field. See Table 27-19 for the interpretation of this field.

Claim 1	Wi-Fi 6 Accused Instrumentalities
	(cont.) **Table 27-18—HE-SIG-A field of an HE SU PPDU and HE ER SU PPDU *(continued)*** **Bit** / **Field** / **Number of bits** / **Description** B10 / Beamformed / 1 / Set to 1 if a beamforming steering matrix is applied to the HE modulated fields. Set to 0 otherwise. B11–B12 / Pre-FEC Padding Factor / 2 / Indicates the pre-FEC padding factor: Set to 0 to indicate a pre-FEC padding factor of 4. Set to 1 to indicate a pre-FEC padding factor of 1. Set to 2 to indicate a pre-FEC padding factor of 2. Set to 3 to indicate a pre-FEC padding factor of 3. B13 / PE Disambiguity / 1 / Indicates PE disambiguity as defined in 27.3.13. B14 / Reserved / 1 / Reserved and set to 1. B15 / Doppler / 1 / Set to 1 if one of the following applies: — The number of OFDM symbols in the Data field is larger than the signaled midamble periodicity plus 1 and the midamble is present. — The number of OFDM symbols in the Data field is less than or equal to the signaled midamble periodicity plus 1 (see 27.3.12.16, the midamble is not present, but the channel is fast varying. It recommends that midamble may be used for the PPDUs of the reverse link. Set to 0 otherwise. B16–B19 / CRC / 4 / CRC for bits 0–41 of the HE-SIG-A field (see 27.3.11.7.3). Bits 0–41 of the HE-SIG-A field correspond to bits 0–25 of the HE-SIG-A1 subfield followed by bits 0–15 of the HE-SIG-A2 subfield. B20–B25 / Tail / 6 / Used to terminate the trellis of the convolutional decoder. Set to 0. It is anticipated that discovery will provide further details of the manner of infringement of the Accused Instrumentalities. In addition, the foregoing structures may be implemented in alternative configurations and usages that are equivalent to this claim element. In addition, the foregoing structures may be implemented in alternative configurations and usages that are equivalent to this claim element because they perform substantially the same function of receiving, over the wireless communications channel, a second packet type comprising a second header field, wherein the second header field comprises four parts, a first part comprising a first set of header bits of the second header field, a second part comprising a second set of header bits of the second header field, a third part comprising a third set of header bits of the second header field and

Claim 1	Wi-Fi 6 Accused Instrumentalities
	a fourth part comprising a fourth set of header bits of the second header field, in substantially the same way of receiving, over the wireless communications channel, a second packet type comprising a second header field, wherein the second header field comprises four parts, a first part comprising a first set of header bits of the second header field, a second part comprising a second set of header bits of the second header field, a third part comprising a third set of header bits of the second header field and a fourth part comprising a fourth set of header bits of the second header field, to obtain the same result of providing additional diversity, reducing data loss and increasing decoding accuracy. For example, alternative equivalent configurations include the following, separately or in conjunction, which achieve the same functionalities provided by the claimed configurations: alternative configurations of HE PHY and PPDUs, including HE SU PPDU, HE MU PPDU, HE ER SU PPDU and HE TB PPDU; alternative configurations of the packet types or formats, headers fields, parts and bits, including HE-SIG-A, HE-SIG-A1, HE-SIG-A2, HE-SIG-A1-R, HE-SIG-A2-R, HE-SIG-B, HE-STF, HE-LTF, L-STF, L-LTF, L-SIG, RL-SIG and PE; alternative configurations of frequency and channel bands and bandwidth divisions, subdivisions, subchannels and subcarriers; alternative configurations of the HE STA, pre-HE [de]modulated and HE [de]modulated fields, transmitter, receiver, encoder, decoder, modulator and demodulator, and alternative symbols and symbol configuration, in transmitting, receiving, encoding, modulating or generating, including for alternative configurations for SU and/or MU.
wherein the first set of header bits of the second header field is the same as the second set of header bits of the second header field, wherein the third set of header bits of the second header field is the same as the fourth set of header bits of the second header field,	The Accused Instrumentalities comprise wherein the first set of header bits of the second header field is the same as the second set of header bits of the second header field, wherein the third set of header bits of the second header field is the same as the fourth set of header bits of the second header field. For example, Wi-Fi 6 devices comprise wherein the first set of header bits of the second header field is the same as the second set of header bits of the second header field, wherein the third set of header bits of the second header field is the same as the fourth set of header bits of the second header field.

Claim 1	Wi-Fi 6 Accused Instrumentalities
	For example, the HE-SIG-A1 subfield (first set of header bits) has the same encoded bits as the HE-SIG-A1-R subfield (second set of header bits), and the HE-SIG-A2 subfield (third set of header bits) has the same encoded bits as the HE-SIG-A2-R (fourth set of header bits):[20] For an HE ER SU PPDU, the HE-SIG-A field is composed of four subfields: HE-SIG-A1, HE-SIG-A1-R, HE-SIG-A2, and HE-SIG-A2-R. Each subfield contains 26 data bits. These four subfields are transmitted sequentially from HE-SIG-A1 to HE-SIG-A2-R. The data bits of the HE-SIG-A1 and HE-SIG-A2 subfields shall be BCC encoded at rate $R = 1/2$, be interleaved, be mapped to a BPSK constellation, and have pilots inserted. The HE-SIG-A1-R subfield has the same encoded bits as the HE-SIG-A1 subfield, and the encoded bits shall be mapped to a QBPSK constellation without interleaving and have pilots inserted. The constellation mappings of the HE-SIG-A field in an HE ER SU PPDU are shown in Figure 27-25. The QBPSK constellation on the HE-SIG-A1-R subfield is used to differentiate between an HE ER SU PPDU and an HE MU PPDU when $m = 1$ in Equation (27-11). The HE-SIG-A2-R subfield has the same encoded bits as the HE-SIG-A2 subfield, and the encoded bits shall be mapped to a BPSK constellation without interleaving and have pilots inserted. BCC encoding, data interleaving, constellation mapping, and pilot insertion follow the steps described in 17.3.5.6, 27.3.12.8, 17.3.5.8, and 17.3.5.9, respectively. See also:[21] b) For an HE ER SU PPDU, the HE-SIG-A field consists of four subfields: HE-SIG-A1, HE-SIG-A1-R, HE-SIG-A2, and HE-SIG-A2-R. The HE-SIG-A1 and HE-SIG-A1-R subfields have the same data bits while the HE-SIG-A2 and HE-SIG-A2-R subfields have the same data bits as defined in 27.3.11.7. The HE-SIG-A field is constructed as follows: It is anticipated that discovery will provide further details of the manner of infringement of the Accused Instrumentalities. In addition, the foregoing structures may be implemented in alternative configurations and usages that are equivalent to this claim element.

[20] IEEE Std 802.11ax-2021, Sec. 27.3.11.7.4.

[21] IEEE Std 802.11ax-2021, Sec. 27.3.6.6.

Claim 1	Wi-Fi 6 Accused Instrumentalities
	In addition, the foregoing structures may be implemented in alternative configurations and usages that are equivalent to this claim element because they perform substantially the same function of receiving a packet type, wherein the first set of header bits of the second header field is the same as the second set of header bits of the second header field, wherein the third set of header bits of the second header field is the same as the fourth set of header bits of the second header field, in substantially the same way of receiving a packet type, wherein the first set of header bits of the second header field is the same as the second set of header bits of the second header field, wherein the third set of header bits of the second header field is the same as the fourth set of header bits of the second header field, to obtain the same result of providing additional diversity, reducing data loss and increasing decoding accuracy. For example, alternative equivalent configurations include the following, separately or in conjunction, which achieve the same functionalities provided by the claimed configurations: alternative configurations of HE PHY and PPDUs, including HE SU PPDU, HE MU PPDU, HE ER SU PPDU and HE TB PPDU; alternative configurations of the packet types or formats, headers fields, parts and bits, including HE-SIG-A, HE-SIG-A1, HE-SIG-A2, HE-SIG-A1-R, HE-SIG-A2-R, HE-SIG-B, HE-STF, HE-LTF, L-STF, L-LTF, L-SIG, RL-SIG and PE; alternative configurations of frequency and channel bands and bandwidth divisions, subdivisions, subchannels and subcarriers; alternative configurations of the HE STA, pre-HE [de]modulated and HE [de]modulated fields, transmitter, receiver, encoder, decoder, modulator and demodulator, and alternative symbols and symbol configuration, in transmitting, receiving, encoding, modulating or generating, including for alternative configurations for SU and/or MU.
the demodulator further operable to demodulate a first OFDM symbol followed by a second OFDM symbol followed by a third OFDM symbol followed by a fourth OFDM symbol, wherein the first OFDM symbol is used to receive the first part of the	The Accused Instrumentalities comprise the demodulator further operable to demodulate a first OFDM symbol followed by a second OFDM symbol followed by a third OFDM symbol followed by a fourth OFDM symbol, wherein the first OFDM symbol is used to receive the first part of the second header field, the second OFDM symbol is used to receive the second part of the second header field, the third OFDM symbol is used to receive the third part of the second header field, the fourth OFDM symbol is used to receive the fourth part of the second header field. For example, Wi-Fi 6 devices comprise the demodulator further operable to demodulate a first OFDM symbol followed by a second OFDM symbol followed by a third OFDM symbol followed by a fourth OFDM symbol, wherein the first OFDM symbol is used to receive the first part of the

Claim 1	Wi-Fi 6 Accused Instrumentalities
second header field, the second OFDM symbol is used to receive the second part of the second header field, the third OFDM symbol is used to receive the third part of the second header field, the fourth OFDM symbol is used to receive the fourth part of the second header field,	second header field, the second OFDM symbol is used to receive the second part of the second header field, the third OFDM symbol is used to receive the third part of the second header field, the fourth OFDM symbol is used to receive the fourth part of the second header field. This is indicated below:[22] b) For an HE ER SU PPDU, the HE-SIG-A field consists of four subfields: HE-SIG-A1, HE-SIG-A1-R, HE-SIG-A2, and HE-SIG-A2-R. The HE-SIG-A1 and HE-SIG-A1-R subfields have the same data bits while the HE-SIG-A2 and HE-SIG-A2-R subfields have the same data bits as defined in 27.3.11.7. The HE-SIG-A field is constructed as follows: 1) Obtain the HE-SIG-A fields from the TXVECTOR. Add the reserved bits, append the calculated CRC, and then append the N_{tail} tail bits as shown in 27.3.11.7. This results in 52 uncoded bits. 2) BCC encoder: Encode the data by a convolutional encoder at the rate $R = 1/2$ as described in 17.3.5.6. 3) BCC interleaver: Interleave the data bits of the HE-SIG-A1 and HE-SIG-A2 subfields as described in 27.3.12.8. The data bits of the HE-SIG-A1-R and HE-SIG-A2-R subfields are not interleaved. 4) Constellation mapper: BPSK modulate the HE-SIG-A1, HE-SIG-A2, and HE-SIG-A2-R data bits as described in 17.3.5.8 to form the first, third, and fourth OFDM symbol of the HE-SIG-A field, respectively. QBPSK modulate the HE-SIG-A1-R encoded data bits to form the second OFDM symbol of the HE-SIG-A field. See also:[23]

[22] IEEE Std 802.11ax-2021, Sec. 27.3.6.6.

[23] IEEE Std 802.11ax-2021, Sec. 27.3.11.7.4.

Claim 1	Wi-Fi 6 Accused Instrumentalities
	For an HE ER SU PPDU, the HE-SIG-A field is composed of four subfields: HE-SIG-A1, HE-SIG-A1-R, HE-SIG-A2, and HE-SIG-A2-R. Each subfield contains 26 data bits. These four subfields are transmitted sequentially from HE-SIG-A1 to HE-SIG-A2-R. The data bits of the HE-SIG-A1 and HE-SIG-A2 subfields shall be BCC encoded at rate $R = 1/2$, be interleaved, be mapped to a BPSK constellation, and have pilots inserted. The HE-SIG-A1-R subfield has the same encoded bits as the HE-SIG-A1 subfield, and the encoded bits shall be mapped to a QBPSK constellation without interleaving and have pilots inserted. The constellation mappings of the HE-SIG-A field in an HE ER SU PPDU are shown in Figure 27-25. The QBPSK constellation on the HE-SIG-A1-R subfield is used to differentiate between an HE ER SU PPDU and an HE MU PPDU when $m = 1$ in Equation (27-11). The HE-SIG-A2-R subfield has the same encoded bits as the HE-SIG-A2 subfield, and the encoded bits shall be mapped to a BPSK constellation without interleaving and have pilots inserted. BCC encoding, data interleaving, constellation mapping, and pilot insertion follow the steps described in 17.3.5.6, 27.3.12.8, 17.3.5.8, and 17.3.5.9, respectively. 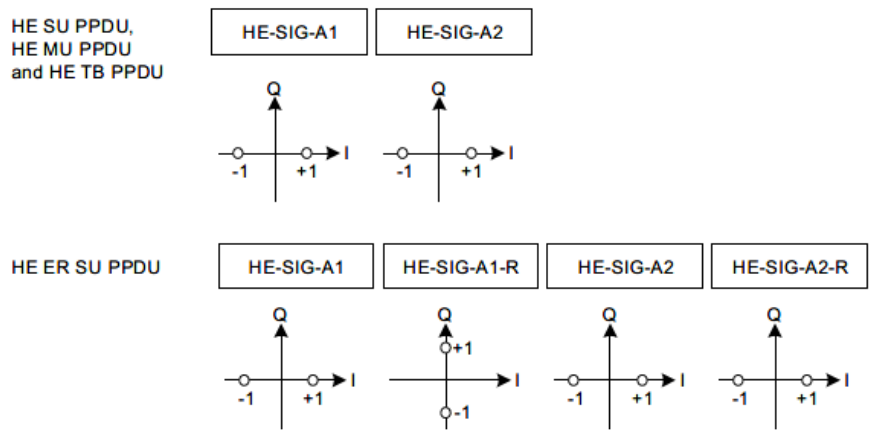 **Figure 27-25—Data subcarrier constellation of HE-SIG-A symbols** See also:[24]

[24] IEEE Std 802.11ax-2021, Sec. 27.3.1.

Claim 1	Wi-Fi 6 Accused Instrumentalities
	27.3 HE PHY **27.3.1 Introduction** Subclause 27.3 provides the procedure by which PSDUs are converted to and from transmissions on the wireless medium. During transmission, a PSDU (in the SU case) or one or more PSDUs (in the MU case) are processed (i.e., scrambled and coded) and appended to the PHY preamble to create the PPDU. At the receiver, the PHY preamble is processed to aid in the detection, demodulation, and delivery of the PSDU. It is anticipated that discovery will provide further details of the manner of infringement of the Accused Instrumentalities. In addition, the foregoing structures may be implemented in alternative configurations and usages that are equivalent to this claim element. In addition, the foregoing structures may be implemented in alternative configurations and usages that are equivalent to this claim element because they perform substantially the same function of demodulating a first OFDM symbol followed by a second OFDM symbol followed by a third OFDM symbol followed by a fourth OFDM symbol, wherein the first OFDM symbol is used to receive the first part of the second header field, the second OFDM symbol is used to receive the second part of the second header field, the third OFDM symbol is used to receive the third part of the second header field, the fourth OFDM symbol is used to receive the fourth part of the second header field, in substantially the same way of demodulating a first OFDM symbol followed by a second OFDM symbol followed by a third OFDM symbol followed by a fourth OFDM symbol, wherein the first OFDM symbol is used to receive the first part of the second header field, the second OFDM symbol is used to receive the second part of the second header field, the third OFDM symbol is used to receive the third part of the second header field, the fourth OFDM symbol is used to receive the fourth part of the second header field, to obtain the same result of providing additional diversity, reducing data loss and increasing decoding accuracy.

Claim 1	Wi-Fi 6 Accused Instrumentalities
	For example, alternative equivalent configurations include the following, separately or in conjunction, which achieve the same functionalities provided by the claimed configurations: alternative configurations of HE PHY and PPDUs, including HE SU PPDU, HE MU PPDU, HE ER SU PPDU and HE TB PPDU; alternative configurations of the packet types or formats, headers fields, parts and bits, including HE-SIG-A, HE-SIG-A1, HE-SIG-A2, HE-SIG-A1-R, HE-SIG-A2-R, HE-SIG-B, HE-STF, HE-LTF, L-STF, L-LTF, L-SIG, RL-SIG and PE; alternative configurations of frequency and channel bands and bandwidth divisions, subdivisions, subchannels and subcarriers; alternative configurations of the HE STA, pre-HE [de]modulated and HE [de]modulated fields, transmitter, receiver, encoder, decoder, modulator and demodulator, and alternative symbols and symbol configuration, in transmitting, receiving, encoding, modulating or generating, including for alternative configurations for SU and/or MU.
wherein the second set of header bits of the second header field received using the second OFDM symbol are received in a different order than the first set of header bits of the second header field received using the first OFDM symbol, and	The Accused Instrumentalities comprise wherein the second set of header bits of the second header field received using the second OFDM symbol are received in a different order than the first set of header bits of the second header field received using the first OFDM symbol. For example, in the Wi-Fi 6 devices, the second set of header bits of the second header field received using the second OFDM symbol are received in a different order than the first set of header bits of the second header field received using the first OFDM symbol. For example, the bits of HE-SIG-A1-R are not interleaved, whereas the bits of HE-SIG-A1 are interleaved. This is indicated below:[25]

[25] IEEE Std 802.11ax-2021, Sec. 27.3.6.6.

Claim 1	Wi-Fi 6 Accused Instrumentalities
	b) For an HE ER SU PPDU, the HE-SIG-A field consists of four subfields: HE-SIG-A1, HE-SIG-A1-R, HE-SIG-A2, and HE-SIG-A2-R. The HE-SIG-A1 and HE-SIG-A1-R subfields have the same data bits while the HE-SIG-A2 and HE-SIG-A2-R subfields have the same data bits as defined in 27.3.11.7. The HE-SIG-A field is constructed as follows: 1) Obtain the HE-SIG-A fields from the TXVECTOR. Add the reserved bits, append the calculated CRC, and then append the N_{tail} tail bits as shown in 27.3.11.7. This results in 52 uncoded bits. 2) BCC encoder: Encode the data by a convolutional encoder at the rate $R = 1/2$ as described in 17.3.5.6. 3) BCC interleaver: Interleave the data bits of the HE-SIG-A1 and HE-SIG-A2 subfields as described in 27.3.12.8. The data bits of the HE-SIG-A1-R and HE-SIG-A2-R subfields are not interleaved. Interleaving the bits of HE-SIG-A1 and not interleaving the bits of HE-SIG-A1-R results in a different reception order of bits as between HE-SIG-A1 and HE-SIG-A1-R. See also:[26]

[26] IEEE Std 802.11ax-2021, Sec. 27.3.12.8.

Claim 1	Wi-Fi 6 Accused Instrumentalities
	27.3.12.8 BCC interleavers For ease of explanation, the operation of the interleaver is described only for the SU case. For user u of an MU transmission, the interleaver operates in the same way on the output bits for the user from the stream parser by replacing N_{SS}, N_{CBPSS}, N_{CBPS}, and N_{BPSCS} with $N_{SS,u}$, $N_{CBPSS,u}$, $N_{CBPS,u}$ and $N_{BPSCS,u}$, respectively. That is, the operation of the interleaver is the same as if the transmission were an SU one, consisting of bits from only that user. The BCC interleaver operation is specified in 21.3.10.8. The interleaver parameters, N_{COL}, N_{ROW}, and N_{ROT}, for the Data field depend on the RU size and whether or not DCM is used and are defined in the "RU size" column of Table 27-35. (cont.)

Claim 1	Wi-Fi 6 Accused Instrumentalities

Table 27-35—BCC interleaver parameters

DCM	Parameter	RU size (tones)				HE-SIG-A/ HE-SIG-B (tones)
		26	52	106	242	56
Not used	N_{COL}	8	16	17	26	13
	N_{ROW}	$3 \times N_{BPSCS}$	$3 \times N_{BPSCS}$	$6 \times N_{BPSCS}$	$9 \times N_{BPSCS}$	$4 \times N_{BPSCS}$
	N_{ROT}	2	11	29	58	—
Used	N_{COL}	4	8	17	13	13
	N_{ROW}	$3 \times N_{BPSCS}$	$3 \times N_{BPSCS}$	$3 \times N_{BPSCS}$	$9 \times N_{BPSCS}$	$2 \times N_{BPSCS}$
	N_{ROT}	2	2	11	29	—

The interleaver parameters, N_{COL} and N_{ROW}, for the HE-SIG-A and HE-SIG-B fields are defined in the "HE-SIG-A/HE-SIG-B" column of Table 27-35.

NOTE—DCM is not used on the HE-SIG-A field.

Claim 1	Wi-Fi 6 Accused Instrumentalities
	See also:[27] **21.3.10.8 BCC interleaver** For ease of explanation, the operation of the interleaver is described for the SU case. For user u of an MU transmission, the interleaver operates in the same way on the output bits for the user from the stream parser by replacing N_{SS}, N_{CBPSS}, N_{CBPSSI}, and N_{BPSCS} with $N_{SS,u}$, $N_{CBPSS,u}$, $N_{CBPSSI,u}$, and $N_{BPSCS,u}$, respectively. That is, the operation of the interleaver is the same as if the transmission were an SU one, consisting of bits from only that user. This subclause describes the interleaver used in the case of BCC encoding. The interleaver described in this subclause shall be bypassed in the case of LDPC encoding. In a 20 MHz, 40 MHz, or 80 MHz VHT PPDU transmission, the bits at the output of the stream parser are processed in groups of N_{CBPS} bits. Each of these groups is divided into N_{SS} blocks of N_{CBPSS} bits, and each block shall be interleaved by an interleaver based on the Clause 17 interleaver. In a 160 MHz or an 80+80 MHz VHT PPDU transmission, each frequency subblock of $N_{CBPSS}/2$ output bits from the segment parser is interleaved by the interleaver for 80 MHz defined in this subclause. This interleaver, which is based on entering the data in rows, and reading it out in columns, has a different number of columns N_{COL} and rows N_{ROW} for different bandwidths. The values of N_{COL} and N_{ROW} are given in Table 21-17. **Table 21-17—Number of rows and columns in the interleaver** | Parameter | 20 MHz | 40 MHz | 80 MHz | | N_{COL} | 13 | 18 | 26 | | N_{ROW} | $4 \times N_{BPSCS}$ | $6 \times N_{BPSCS}$ | $9 \times N_{BPSCS}$ | | N_{ROT} ($N_{SS} \leq 4$) | 11 | 29 | 58 | | N_{ROT} ($N_{SS} > 4$) | 6 | 13 | 28 |

[27] IEEE Std 802.11-2020, Sec. 21.3.10.8.

Claim 1	Wi-Fi 6 Accused Instrumentalities
	(cont.) After the operations based on the Clause 17 interleaver have been applied and if more than one spatial stream exists, a third operation called *frequency rotation* is applied to the additional spatial streams. The parameter for the frequency rotation is N_{ROT}. The values of N_{ROT} are given in Table 21-17. An additional parameter is the spatial stream index $i_{SS} = 1, 2, \ldots, N_{SS}$. The output of the third operation is a function of the spatial stream index. The interleaving is defined using three permutations. The first permutation is given by the rule shown in Equation (21-76). $$i = N_{ROW}(k \bmod N_{COL}) + \left\lfloor \frac{k}{N_{COL}} \right\rfloor, k = 0, 1, \ldots, N_{CBPSSI} - 1 \quad (21\text{-}76)$$ The second permutation is defined by the rule shown in Equation (21-77). $$j = s\left\lfloor \frac{i}{s} \right\rfloor + \left(i + N_{CBPSSI} - \left\lfloor \frac{N_{COL} \cdot i}{N_{CBPSSI}} \right\rfloor\right) \bmod s, \quad i = 0, 1, \ldots, N_{CBPSSI} - 1 \quad (21\text{-}77)$$ where s is defined in Equation (21-68)

Claim 1	Wi-Fi 6 Accused Instrumentalities
	(cont.) If $2 \le N_{SS} \le 4$, a frequency rotation is applied to the output of the second permutation as shown in Equation (21-78). $$r = \left\{ j - \left[(2(i_{SS} - 1)) \bmod 3 + 3 \left\lfloor \frac{i_{SS} - 1}{3} \right\rfloor \right] \cdot N_{ROT} \cdot N_{BPSCS} \right\} \bmod N_{CBPSSI}, \quad (21\text{-}78)$$ $$j = 0, 1, \ldots, N_{CBPSSI} - 1$$ where $i_{SS} = 1, 2, \ldots, N_{SS}$ is the spatial steam index on which this interleaver is operating If $N_{SS} > 4$, a frequency rotation is applied to the output of the second permutation as shown in Equation (21-79). $$r = \{ j - J(i_{SS}) \cdot N_{ROT} \cdot N_{BPSCS} \} \bmod N_{CBPSSI}, j = 0, 1, \ldots, N_{CBPSSI} - 1 \quad (21\text{-}79)$$ where $i_{SS} = 1, 2, \ldots, N_{SS}$ is the spatial steam index on which this interleaver is operating, and $J(i_{SS})$ is an integer as defined in Table 21-18.

Claim 1	Wi-Fi 6 Accused Instrumentalities
	(cont.) **Table 21-18—$J(i_{SS})$ values** i_{SS} | $J(i_{SS})$ 1 | 0 2 | 5 3 | 2 4 | 7 5 | 3 6 | 6 7 | 1 8 | 4

Claim 1	Wi-Fi 6 Accused Instrumentalities
	Interleaving is a three-step permutation process that begins with interleaving using an interleaver based on the "Clause 17 interleaver," as indicated above. Per Clause 17, interleaving is performed separately for every OFDM symbol. The first permutation causes adjacent coded bits to be mapped onto nonadjacent subcarriers. The second causes adjacent coded bits to be mapped alternately onto less and more significant constellation bits:[28] **17.3.5.7 Data interleaving** All encoded data bits shall be interleaved by a block interleaver with a block size corresponding to the number of bits in a single OFDM symbol, N_{CBPS}. The interleaver is defined by a two-step permutation. The first permutation causes adjacent coded bits to be mapped onto nonadjacent subcarriers. The second causes adjacent coded bits to be mapped alternately onto less and more significant bits of the constellation and, thereby, long runs of low reliability (LSB) bits are avoided. As further indicated above, after the operations based on the Clause 17 interleaver have been applied, and if more than one spatial stream exists, a third operation called frequency rotation is applied to the additional spatial stream. The purpose of the interleaver, as indicated above, is to process OFDM symbols such that adjacent bits are not associated with a single subcarrier or adjacent subcarriers. Instead, adjacent bits are permuted onto nonadjacent subcarriers and onto more or less significant bits, i.e., reordered. It is anticipated that discovery will provide further details of the manner of infringement of the Accused Instrumentalities. In addition, the foregoing structures may be implemented in alternative configurations and usages that are equivalent to this claim element. In addition, the foregoing structures may be implemented in alternative configurations and usages that are equivalent to this claim element because they perform substantially the same function of receiving the second set of header bits of the second header field using the second OFDM symbol in

[28] IEEE Std 802.11-2020, Sec. 17.3.5.7.

Claim 1	Wi-Fi 6 Accused Instrumentalities
	a different order than the first set of header bits of the second header field received using the first OFDM symbol, in substantially the same way of receiving the second set of header bits of the second header field using the second OFDM symbol in a different order than the first set of header bits of the second header field received using the first OFDM symbol, to obtain the same result of providing additional diversity, reducing data loss and increasing decoding accuracy. For example, alternative equivalent configurations include the following, separately or in conjunction, which achieve the same functionalities provided by the claimed configurations: alternative configurations of HE PHY and PPDUs, including HE SU PPDU, HE MU PPDU, HE ER SU PPDU and HE TB PPDU; alternative configurations of the packet types or formats, headers fields, parts and bits, including HE-SIG-A, HE-SIG-A1, HE-SIG-A2, HE-SIG-A1-R, HE-SIG-A2-R, HE-SIG-B, HE-STF, HE-LTF, L-STF, L-LTF, L-SIG, RL-SIG and PE; alternative configurations of frequency and channel bands and bandwidth divisions, subdivisions, subchannels and subcarriers; alternative configurations of the HE STA, pre-HE [de]modulated and HE [de]modulated fields, transmitter, receiver, encoder, decoder, modulator and demodulator, and alternative symbols and symbol configuration, in transmitting, receiving, encoding, modulating or generating, including for alternative configurations for SU and/or MU.
wherein the fourth set of header bits of the second header field received using the fourth OFDM symbol are received in a different order than the third set of header bits of the second header field received using the third OFDM symbol.	The Accused Instrumentalities comprise wherein the fourth set of header bits of the second header field received using the fourth OFDM symbol are received in a different order than the third set of header bits of the second header field received using the third OFDM symbol. For example, in the Wi-Fi 6 devices, the fourth set of header bits of the second header field received using the fourth OFDM symbol are received in a different order than the third set of header bits of the second header field received using the third OFDM symbol. For example, the bits of HE-SIG-A2-R are not interleaved, whereas the bits of HE-SIG-A2 are interleaved. This is indicated below:[29]

[29] IEEE Std 802.11ax-2021, Sec. 27.3.6.6.

Claim 1	Wi-Fi 6 Accused Instrumentalities
	b) For an HE ER SU PPDU, the HE-SIG-A field consists of four subfields: HE-SIG-A1, HE-SIG-A1-R, HE-SIG-A2, and HE-SIG-A2-R. The HE-SIG-A1 and HE-SIG-A1-R subfields have the same data bits while the HE-SIG-A2 and HE-SIG-A2-R subfields have the same data bits as defined in 27.3.11.7. The HE-SIG-A field is constructed as follows: 1) Obtain the HE-SIG-A fields from the TXVECTOR. Add the reserved bits, append the calculated CRC, and then append the N_{tail} tail bits as shown in 27.3.11.7. This results in 52 uncoded bits. 2) BCC encoder: Encode the data by a convolutional encoder at the rate $R = 1/2$ as described in 17.3.5.6. 3) BCC interleaver: Interleave the data bits of the HE-SIG-A1 and HE-SIG-A2 subfields as described in 27.3.12.8. The data bits of the HE-SIG-A1-R and HE-SIG-A2-R subfields are not interleaved. Interleaving the bits of HE-SIG-A2 and not interleaving the bits of HE-SIG-A2-R results in a different reception order of bits as between HE-SIG-A2 and HE-SIG-A2-R. It is anticipated that discovery will provide further details of the manner of infringement of the Accused Instrumentalities. In addition, the foregoing structures may be implemented in alternative configurations and usages that are equivalent to this claim element. In addition, the foregoing structures may be implemented in alternative configurations and usages that are equivalent to this claim element because they perform substantially the same function of receiving the fourth set of header bits of the second header field using the fourth OFDM symbol in a different order than the third set of header bits of the second header field using the third OFDM symbol, in substantially the same way of receiving the fourth set of header bits of the second header field using the fourth OFDM symbol in a different order than the third set of header bits of the second header field using the third OFDM symbol, to obtain the same result of providing additional diversity, reducing data loss and increasing decoding accuracy. For example, alternative equivalent configurations include the following, separately or in conjunction, which achieve the same functionalities provided by the claimed configurations: alternative configurations of HE PHY and PPDUs, including HE SU PPDU, HE

Claim 1	Wi-Fi 6 Accused Instrumentalities
	MU PPDU, HE ER SU PPDU and HE TB PPDU; alternative configurations of the packet types or formats, headers fields, parts and bits, including HE-SIG-A, HE-SIG-A1, HE-SIG-A2, HE-SIG-A1-R, HE-SIG-A2-R, HE-SIG-B, HE-STF, HE-LTF, L-STF, L-LTF, L-SIG, RL-SIG and PE; alternative configurations of frequency and channel bands and bandwidth divisions, subdivisions, subchannels and subcarriers; alternative configurations of the HE STA, pre-HE [de]modulated and HE [de]modulated fields, transmitter, receiver, encoder, decoder, modulator and demodulator, and alternative symbols and symbol configuration, in transmitting, receiving, encoding, modulating or generating, including for alternative configurations for SU and/or MU.

Claim 2	Wi-Fi 6 Accused Instrumentalities
The wireless transceiver of claim 1, wherein the reception of the same header bits in the second OFDM symbol provides diversity to increase a likelihood of correctly receiving header information of the second packet type.	The Accused Instrumentalities comprise wherein the reception of the same header bits in the second OFDM symbol provides diversity to increase a likelihood of correctly receiving header information of the second packet type. For example, Wi-Fi 6 devices comprise wherein the reception of the same header bits in the second OFDM symbol provides diversity to increase a likelihood of correctly receiving header information of the second packet type. This is indicated below:[30] **Sept 2015** **doc.: IEEE 802.11-15/0826r2** **HE-SIGA transmission for range extension** **Date:** 2015-07-12

[30]September 2015 Working Group Comments, IEEE Std 802.11-15/0826r2.

Claim 2	Wi-Fi 6 Accused Instrumentalities
	Transmitter of HE-SIG-A • **We propose to use the time repetition and bypassing the bit interleaver of repeated HE-SIG-A symbols to enhance robustness of HE-SIG-A in outdoor scenarios.** 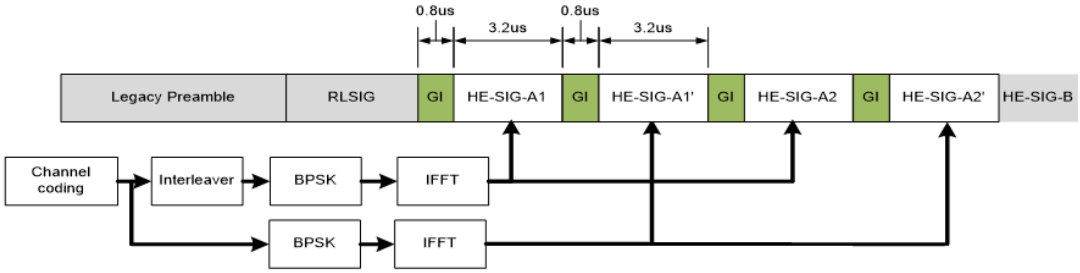

Claim 2	Wi-Fi 6 Accused Instrumentalities
	Conclusion • **Repeated HE-SIGA is needed in many use cases including range extension and outdoor channel operation.** • **An implementation friendly repetition method is proposed to harvest the frequency diversity gain.** These working group comments were adopted by the IEEE 802.11ax standard and are implemented by the Accused Instrumentalities. This is indicated below:[31] Example transmitter block diagrams are shown in Figure 27-13 to Figure 27-22. The actual structure of the transmitter is implementation dependent. In particular, Figure 27-13 shows the transmit process for the L-SIG, RL-SIG, and HE-SIG-A fields of an HE PPDU using one frequency segment when the Beam Change subfield in the HE-SIG-A field is 1. These transmit blocks are also used to generate the L-STF and L-LTF fields of the HE PPDU when the Beam Change subfield in the HE-SIG-A field is 1, with the following exceptions: — The BCC encoder and interleaver and the constellation mapper are not used when generating the L-STF and L-LTF fields. — The BCC interleaver is not applied in the 2nd and the 4th OFDM symbols of the HE-SIG-A field in the HE ER SU PPDU.

[31] IEEE Std 802.11ax-2021, Sec. 27.3.5.

Claim 2	Wi-Fi 6 Accused Instrumentalities
	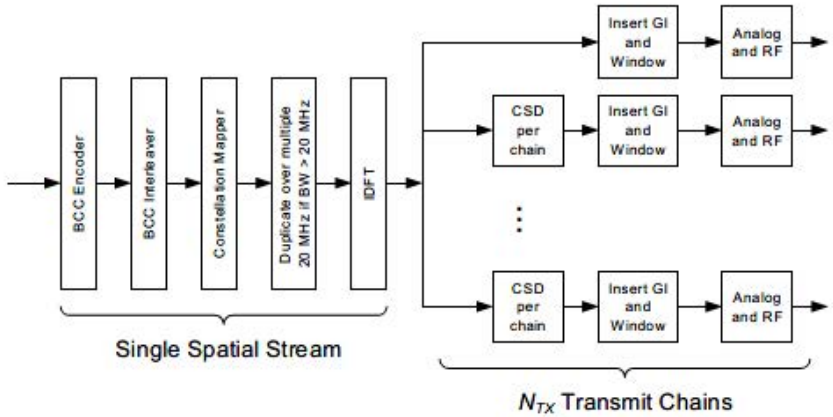 **Figure 27-13—Transmitter block diagram for L-SIG, RL-SIG, and HE-SIG-A fields for an HE SU PPDU and HE ER SU PPDU if Beam Change subfield is 1** It is anticipated that discovery will provide further details of the manner of infringement of the Accused Instrumentalities. In addition, the foregoing structures may be implemented in alternative configurations and usages that are equivalent to this claim element. In addition, the foregoing structures may be implemented in alternative configurations and usages that are equivalent to this claim element because they perform substantially the same function of reception of the same header bits in the second OFDM symbol provides diversity to increase a likelihood of correctly receiving header information of the second packet type, in substantially the same way of reception of the same header bits in the second OFDM symbol provides diversity to increase a likelihood of correctly receiving header information of the second packet type, to obtain the same result of providing additional diversity, reducing data loss and increasing decoding accuracy.

Claim 2	Wi-Fi 6 Accused Instrumentalities
	For example, alternative equivalent configurations include the following, separately or in conjunction, which achieve the same functionalities provided by the claimed configurations: alternative configurations of HE PHY and PPDUs, including HE SU PPDU, HE MU PPDU, HE ER SU PPDU and HE TB PPDU; alternative configurations of the packet types or formats, headers fields, parts and bits, including HE-SIG-A, HE-SIG-A1, HE-SIG-A2, HE-SIG-A1-R, HE-SIG-A2-R, HE-SIG-B, HE-STF, HE-LTF, L-STF, L-LTF, L-SIG, RL-SIG and PE; alternative configurations of frequency and channel bands and bandwidth divisions, subdivisions, subchannels and subcarriers; alternative configurations of the HE STA, pre-HE [de]modulated and HE [de]modulated fields, transmitter, receiver, encoder, decoder, modulator and demodulator, and alternative symbols and symbol configuration, in transmitting, receiving, encoding, modulating or generating, including for alternative configurations for SU and/or MU.

Claim 3	Wi-Fi 6 Accused Instrumentalities
The wireless transceiver of claim 1, wherein the reception of the same header bits in the fourth OFDM symbol provides diversity to increase a likelihood of correctly receiving header information of the second packet type.	The Accused Instrumentalities comprise wherein the reception of the same header bits in the fourth OFDM symbol provides diversity to increase a likelihood of correctly receiving header information of the second packet type. For example, Wi-Fi 6 devices comprise wherein the reception of the same header bits in the fourth OFDM symbol provides diversity to increase a likelihood of correctly receiving header information of the second packet type. This is indicated below:[32]

[32]September 2015 Working Group Comments, IEEE Std 802.11-15/0826r2.

Claim 3	Wi-Fi 6 Accused Instrumentalities
	Sept 2015 **doc.: IEEE 802.11-15/0826r2** **HE-SIGA transmission for range extension** **Date:** 2015-07-12 **Transmitter of HE-SIG-A** • **We propose to use the time repetition and bypassing the bit interleaver of repeated HE-SIG-A symbols to enhance robustness of HE-SIG-A in outdoor scenarios.** 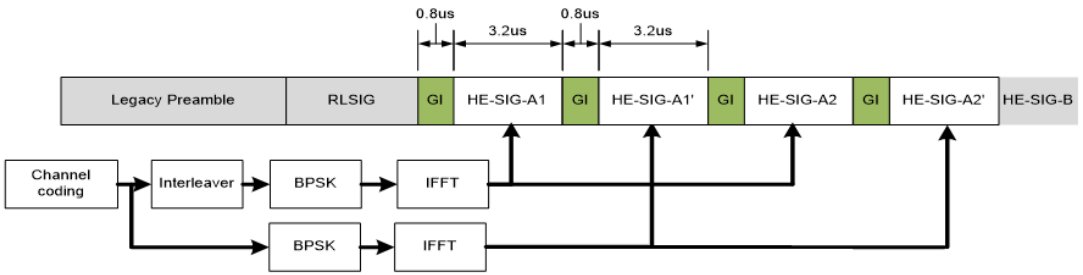

Claim 3	Wi-Fi 6 Accused Instrumentalities
	Conclusion • **Repeated HE-SIGA is needed in many use cases including range extension and outdoor channel operation.** • **An implementation friendly repetition method is proposed to harvest the frequency diversity gain.** These working group comments were adopted by the IEEE 802.11ax standard and are implemented by the Accused Instrumentalities. This is indicated below:[33] Example transmitter block diagrams are shown in Figure 27-13 to Figure 27-22. The actual structure of the transmitter is implementation dependent. In particular, Figure 27-13 shows the transmit process for the L-SIG, RL-SIG, and HE-SIG-A fields of an HE PPDU using one frequency segment when the Beam Change subfield in the HE-SIG-A field is 1. These transmit blocks are also used to generate the L-STF and L-LTF fields of the HE PPDU when the Beam Change subfield in the HE-SIG-A field is 1, with the following exceptions: — The BCC encoder and interleaver and the constellation mapper are not used when generating the L-STF and L-LTF fields. — The BCC interleaver is not applied in the 2nd and the 4th OFDM symbols of the HE-SIG-A field in the HE ER SU PPDU.

[33] IEEE Std 802.11ax-2021, Sec. 27.3.5.

Claim 3	Wi-Fi 6 Accused Instrumentalities
	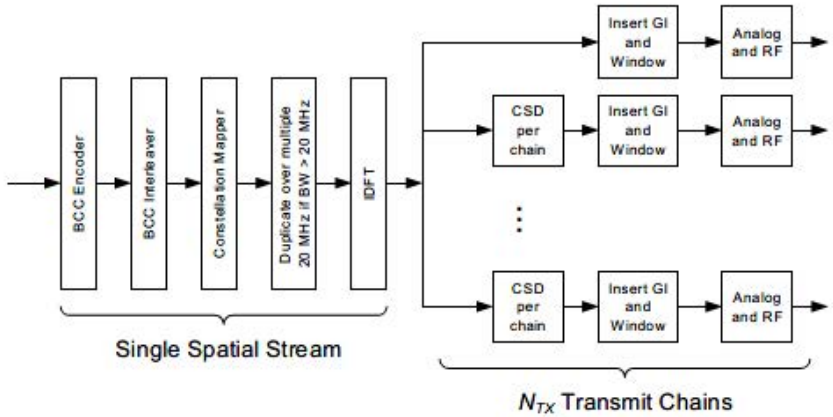 **Figure 27-13—Transmitter block diagram for L-SIG, RL-SIG, and HE-SIG-A fields for an HE SU PPDU and HE ER SU PPDU if Beam Change subfield is 1** It is anticipated that discovery will provide further details of the manner of infringement of the Accused Instrumentalities. In addition, the foregoing structures may be implemented in alternative configurations and usages that are equivalent to this claim element. In addition, the foregoing structures may be implemented in alternative configurations and usages that are equivalent to this claim element because they perform substantially the same function of reception of the same header bits in the fourth OFDM symbol provides diversity to increase a likelihood of correctly receiving header information of the second packet type, in substantially the same way of reception of the same header bits in the fourth OFDM symbol provides diversity to increase a likelihood of correctly receiving header information of the second packet type, to obtain the same result of providing additional diversity, reducing data loss and increasing decoding accuracy.

Claim 3	Wi-Fi 6 Accused Instrumentalities
	For example, alternative equivalent configurations include the following, separately or in conjunction, which achieve the same functionalities provided by the claimed configurations: alternative configurations of HE PHY and PPDUs, including HE SU PPDU, HE MU PPDU, HE ER SU PPDU and HE TB PPDU; alternative configurations of the packet types or formats, headers fields, parts and bits, including HE-SIG-A, HE-SIG-A1, HE-SIG-A2, HE-SIG-A1-R, HE-SIG-A2-R, HE-SIG-B, HE-STF, HE-LTF, L-STF, L-LTF, L-SIG, RL-SIG and PE; alternative configurations of frequency and channel bands and bandwidth divisions, subdivisions, subchannels and subcarriers; alternative configurations of the HE STA, pre-HE [de]modulated and HE [de]modulated fields, transmitter, receiver, encoder, decoder, modulator and demodulator, and alternative symbols and symbol configuration, in transmitting, receiving, encoding, modulating or generating, including for alternative configurations for SU and/or MU.

Claim 5	Wi-Fi 6 Accused Instrumentalities
The wireless transceiver of claim 1, wherein the wireless transceiver supports one or more wireless standards.	The Accused Instrumentalities comprise wherein the wireless transceiver supports one or more wireless standards. For example, the Accused Instrumentalities comprise a wireless transceiver that supports the IEEE 802.11ax standard, also known as WiFi 6. For example, Defendants advertise the Accused Instrumentalities as utilizing a Wi-Fi 6 or 802.11ax transceiver, such as a wireless card or modem, e.g., Wireless Intel Dual Band Wi-Fi 6 AX211 2x2 802.11ax 160MHz wireless card, and/or as Wi-Fi CERTIFIED 6.[34] [35] The standard requires that 802.11ax products be capable of transmitting and receiving PPDUs that are compliant with the mandatory requirements of the PHY specifications as follows:[36]

[34] *See, e.g.*, https://www.dell.com/en-us/shop/dell-laptops/sr/laptops/wi-fi-6?appliedRefinements=37766 (search results for laptops filtered by "Wi-Fi 6"); https://www.dell.com/en-us/shop/desktop-computers/sr/desktops/wi-fi-6?appliedRefinements=38804 (search results for desktops filtered by "Wi-Fi 6"); and https://www.dell.com/en-us/shop/dell-laptops/latitude-3520-laptop/spd/latitude-15-3520-laptop/s061l3520us (showing "Intel Dual Band Wi-Fi 6 AX201 2x2 802.11ax 160MHz + Bluetooth 5.1" for "Wireless" for the Latitude 3520 Laptop).

[35] *See, e.g.*, https://www.hp.com/us-en/shop/sitesearch?keyword=wi-fi%206 (search results for products with keyword "Wi-Fi 6"); https://www.hp.com/us-en/shop/pdp/hp-spectre-x360-2-in-1-laptop-16-f1747nr (showing "Intel® Wi-Fi 6E AX211 (2x2)" for the "Wireless Technology" of HP Spectre x360 2-in-1 Laptop 16-f1747nr); https://www.hp.com/us-en/shop/pdp/hp-envy-desktop-te02-0250xt-pc-3y3r0av-1 (showing "Realtek Wi-Fi 6 (2x2)" for the "Wireless Technology" of HP ENVY Desktop TE02-0250xt PC).

[36] IEEE Std 802.11ax-2021, Sec. 27.3.11.7.2

Claim 5	Wi-Fi 6 Accused Instrumentalities
	27. High-efficiency (HE) PHY specification **27.1 Introduction** **27.1.1 Introduction to the HE PHY** Clause 27 specifies the PHY entity for a high-efficiency (HE) orthogonal frequency division multiplexing (OFDM) system. In addition to the requirements in Clause 27, an HE STA shall be capable of transmitting and receiving PPDUs that are compliant with the mandatory requirements of the following PHY specifications: — Clause 19 and Clause 21 if the HE STA supports an operating channel width greater than or equal to 80 MHz and is operating in the 5 GHz band. — Clause 19 and Clause 21 transmission and reception on 20 MHz channel width (see 26.17.1) if the HE STA is a 20 MHz-only non-AP HE STA and is operating in the 5 GHz band. — Clause 19 if the HE STA is operating in the 2.4 GHz band. — Clause 17 if the HE STA is operating in the 6 GHz band. It is anticipated that discovery will provide further details of the manner of infringement of the Accused Instrumentalities. In addition, the foregoing structures may be implemented in alternative configurations and usages that are equivalent to this claim element. In addition, the foregoing structures may be implemented in alternative configurations and usages that are equivalent to this claim element because they perform substantially the same function of supporting one or more wireless standards, in substantially the same way of supporting one or more wireless standards, to obtain the same result of providing additional diversity, reducing data loss and increasing decoding accuracy. For example, alternative equivalent configurations include the following, separately or in conjunction, which achieve the same functionalities provided by the claimed configurations: alternative configurations of HE PHY and PPDUs, including HE SU PPDU, HE MU PPDU, HE ER SU PPDU and HE TB PPDU; alternative configurations of the packet types or

Claim 5	Wi-Fi 6 Accused Instrumentalities
	formats, headers fields, parts and bits, including HE-SIG-A, HE-SIG-A1, HE-SIG-A2, HE-SIG-A1-R, HE-SIG-A2-R, HE-SIG-B, HE-STF, HE-LTF, L-STF, L-LTF, L-SIG, RL-SIG and PE; alternative configurations of frequency and channel bands and bandwidth divisions, subdivisions, subchannels and subcarriers; alternative configurations of the HE STA, pre-HE [de]modulated and HE [de]modulated fields, transmitter, receiver, encoder, decoder, modulator and demodulator, and alternative symbols and symbol configuration, in transmitting, receiving, encoding, modulating or generating, including for alternative configurations for SU and/or MU.

<table>
<tr><th>Claim 7</th><th>Wi-Fi 6 Accused Instrumentalities</th></tr>
<tr><td>The wireless transceiver of claim 1, wherein the first header field indicates that [sic] the type of packet.</td><td>
The Accused Instrumentalities comprise wherein the first header field indicates the type of packet.
For example, Wi-Fi 6 devices comprise wherein the first header field indicates the type of packet. This is indicated below:[37]
27.3.11.7.2 Content
The HE-SIG-A field for an HE SU PPDU or an HE ER SU PPDU contains the fields listed in Table 27-18.
Table 27-18—HE-SIG-A field of an HE SU PPDU and HE ER SU PPDU
<table>
<tr><th>Bit</th><th>Field</th><th>Number of bits</th><th>Description</th></tr>
<tr><td colspan="4">HE-SIG-A1 subfield of HE-SIG-A field</td></tr>
<tr><td>B0</td><td>Format</td><td>1</td><td>Differentiate an HE SU PPDU and HE ER SU PPDU from an HE TB PPDU:
Set to 1 for an HE SU PPDU and HE ER SU PPDU.</td></tr>
</table>
It is anticipated that discovery will provide further details of the manner of infringement of the Accused Instrumentalities.
In addition, the foregoing structures may be implemented in alternative configurations and usages that are equivalent to this claim element.
In addition, the foregoing structures may be implemented in alternative configurations and usages that are equivalent to this claim element because they perform substantially the same function of indicating the type of packet, in substantially the same way of indicating using a header bit, to obtain the same result of providing additional diversity, reducing data loss and increasing decoding accuracy.
</td></tr>
</table>

[37] IEEE Std 802.11ax-2021, Sec. 27.3.11.7.2

Claim 7	Wi-Fi 6 Accused Instrumentalities
	For example, alternative equivalent configurations include the following, separately or in conjunction, which achieve the same functionalities provided by the claimed configurations: alternative configurations of HE PHY and PPDUs, including HE SU PPDU, HE MU PPDU, HE ER SU PPDU and HE TB PPDU; alternative configurations of the packet types or formats, headers fields, parts and bits, including HE-SIG-A, HE-SIG-A1, HE-SIG-A2, HE-SIG-A1-R, HE-SIG-A2-R, HE-SIG-B, HE-STF, HE-LTF, L-STF, L-LTF, L-SIG, RL-SIG and PE; alternative configurations of frequency and channel bands and bandwidth divisions, subdivisions, subchannels and subcarriers; alternative configurations of the HE STA, pre-HE [de]modulated and HE [de]modulated fields, transmitter, receiver, encoder, decoder, modulator and demodulator, and alternative symbols and symbol configuration, in transmitting, receiving, encoding, modulating or generating, including for alternative configurations for SU and/or MU.

<table>
<tr><th>Claim 8</th><th>Wi-Fi 6 Accused Instrumentalities</th></tr>
<tr><td>The wireless transceiver of claim 1, wherein the second header field indicates the type of packet.</td><td>
The Accused Instrumentalities comprise wherein the second header field indicates the type of packet.
For example, Wi-Fi 6 devices comprise wherein the second header field indicates the type of packet. This is indicated below:[38]
27.3.11.7.2 Content
The HE-SIG-A field for an HE SU PPDU or an HE ER SU PPDU contains the fields listed in Table 27-18.
Table 27-18—HE-SIG-A field of an HE SU PPDU and HE ER SU PPDU
<table>
<tr><th>Bit</th><th>Field</th><th>Number of bits</th><th>Description</th></tr>
<tr><td colspan="4">HE-SIG-A1 subfield of HE-SIG-A field</td></tr>
<tr><td>B0</td><td>Format</td><td>1</td><td>Differentiate an HE SU PPDU and HE ER SU PPDU from an HE TB PPDU:
Set to 1 for an HE SU PPDU and HE ER SU PPDU.</td></tr>
</table>
It is anticipated that discovery will provide further details of the manner of infringement of the Accused Instrumentalities.
In addition, the foregoing structures may be implemented in alternative configurations and usages that are equivalent to this claim element.
In addition, the foregoing structures may be implemented in alternative configurations and usages that are equivalent to this claim element because they perform substantially the same function of indicating the type of packet, in substantially the same way of indicating using a header bit, to
</td></tr>
</table>

[38] IEEE Std 802.11ax-2021, Sec. 27.3.11.7.2

Claim 8	Wi-Fi 6 Accused Instrumentalities
	obtain the same result of providing additional diversity, reducing data loss and increasing decoding accuracy. For example, alternative equivalent configurations include the following, separately or in conjunction, which achieve the same functionalities provided by the claimed configurations: alternative configurations of HE PHY and PPDUs, including HE SU PPDU, HE MU PPDU, HE ER SU PPDU and HE TB PPDU; alternative configurations of the packet types or formats, headers fields, parts and bits, including HE-SIG-A, HE-SIG-A1, HE-SIG-A2, HE-SIG-A1-R, HE-SIG-A2-R, HE-SIG-B, HE-STF, HE-LTF, L-STF, L-LTF, L-SIG, RL-SIG and PE; alternative configurations of frequency and channel bands and bandwidth divisions, subdivisions, subchannels and subcarriers; alternative configurations of the HE STA, pre-HE [de]modulated and HE [de]modulated fields, transmitter, receiver, encoder, decoder, modulator and demodulator, and alternative symbols and symbol configuration, in transmitting, receiving, encoding, modulating or generating, including for alternative configurations for SU and/or MU.

Appendix C
Claim Chart for U.S. Patent No. 10,079,707

Claim 9	Wi-Fi 6 Accused Instrumentalities
A method of operating a wireless OFDM (Orthogonal Frequency Division Multiplexing) transceiver comprising:	The Accused Instrumentalities comprise a method of operating a wireless OFDM (Orthogonal Frequency Division Multiplexing) transceiver that comprises the following technical elements and limitations, as described in the Wi-Fi 6 Standard. See claim 1 (preamble).
receiving, by a wireless OFDM communications receiver over a wireless communication channel, a first packet type comprising a first header field, wherein the first header field comprises two parts, a first part comprising a first set of header bits of the first header field and a second part comprising a second set of header bits of the first header field, wherein the first set of header bits of the first header field is different than the second set of header bits of the first header field; and	The Accused Instrumentalities comprise receiving, by a wireless OFDM communications receiver over a wireless communication channel, a first packet type comprising a first header field, wherein the first header field comprises two parts, a first part comprising a first set of header bits of the first header field and a second part comprising a second set of header bits of the first header field, wherein the first set of header bits of the first header field is different than the second set of header bits of the first header field. See claim 1 ("a wireless OFDM communications receiver operable to receive, over a wireless communication channel, a first packet type comprising a first header field, wherein the first header field comprises two parts, a first part comprising a first set of header bits of the first header field and a second part comprising a second set of header bits of the first header field, wherein the first set of header bits of the first header field is different than the second set of header bits of the first header field.")
demodulating, by a demodulator, a first OFDM symbol followed by a second OFDM symbol, wherein the first OFDM symbol is used to receive the first part of the	The Accused Instrumentalities comprise demodulating, by a demodulator, a first OFDM symbol followed by a second OFDM symbol, wherein the first OFDM symbol is used to receive the first part of the first header field and the second OFDM symbol is used to receive the second part of the first header field. See claim 1 ("a demodulator operable to demodulate a first OFDM symbol followed by a second OFDM symbol, wherein the first OFDM symbol is used to receive the first

Claim 9	Wi-Fi 6 Accused Instrumentalities
first header field and the second OFDM symbol is used to receive the second part of the first header field;	part of the first header field and the second OFDM symbol is used to receive the second part of the first header field”).
receiving, by the wireless OFDM communications receiver over the wireless communications channel, a second packet type comprising a second header field, wherein the second header field comprises four parts, a first part comprising a first set of header bits of the second header field, a second part comprising a second set of header bits of the second header field, a third part comprising a third set of header bits of the second header field and a fourth part comprising a fourth set of header bits of the second header field,	The Accused Instrumentalities comprise receiving, by the wireless OFDM communications receiver over the wireless communications channel, a second packet type comprising a second header field, wherein the second header field comprises four parts, a first part comprising a first set of header bits of the second header field, a second part comprising a second set of header bits of the second header field, a third part comprising a third set of header bits of the second header field and a fourth part comprising a fourth set of header bits of the second header field. See claim 1 (“the wireless OFDM receiver further operable to receive, over the wireless communications channel, a second packet type comprising a second header field, wherein the second header field comprises four parts, a first part comprising a first set of header bits of the second header field, a second part comprising a second set of header bits of the second header field, a third part comprising a third set of header bits of the second header field and a fourth part comprising a fourth set of header bits of the second header field.”)
wherein the first set of header bits of the second header field is the same as the second set of header bits of the second header field, wherein the third set of header bits of the	The Accused Instrumentalities comprise wherein the first set of header bits of the second header field is the same as the second set of header bits of the second header field, wherein the third set of header bits of the second header field is the same as the fourth set of header bits of the second header field. See claim 1 (“wherein the first set of header bits of the second header field is the

Claim 9	Wi-Fi 6 Accused Instrumentalities
second header field is the same as the fourth set of header bits of the second header field; and	same as the second set of header bits of the second header field, wherein the third set of header bits of the second header field is the same as the fourth set of header bits of the second header field.”)
demodulating, by the demodulator, a first OFDM symbol followed by a second OFDM symbol followed by a third OFDM symbol followed by a fourth OFDM symbol, wherein the first OFDM symbol is used to receive the first part of the second header field, the second OFDM symbol is used to receive the second part of the second header field, the third OFDM symbol is used to receive the third part of the second header field, the fourth OFDM symbol is used to receive the fourth part of the second header field,	The Accused Instrumentalities comprise demodulate, by the demodulator, a first OFDM symbol followed by a second OFDM symbol followed by a third OFDM symbol followed by a fourth OFDM symbol, wherein the first OFDM symbol is used to receive the first part of the second header field, the second OFDM symbol is used to receive the second part of the second header field, the third OFDM symbol is used to receive the third part of the second header field, the fourth OFDM symbol is used to receive the fourth part of the second header field. See claim 1 (“the demodulator further operable to demodulate a first OFDM symbol followed by a second OFDM symbol followed by a third OFDM symbol followed by a fourth OFDM symbol, wherein the first OFDM symbol is used to receive the first part of the second header field, the second OFDM symbol is used to receive the second part of the second header field, the third OFDM symbol is used to receive the third part of the second header field, the fourth OFDM symbol is used to receive the fourth part of the second header field.”)
wherein the second set of header bits of the second header field received using the second OFDM symbol are received in a different order than the first set of header bits of the second header field	The Accused Instrumentalities comprise wherein the second set of header bits of the second header field received using the second OFDM symbol are received in a different order than the first set of header bits of the second header field received using the first OFDM symbol. See claim 1 (“wherein the second set of header bits of the second header field received using the second OFDM symbol are received in a different order than the first set of header bits of the second header field received using the first OFDM symbol.”)

Claim 9	Wi-Fi 6 Accused Instrumentalities
received using the first OFDM symbol, and	
wherein the fourth set of header bits of the second header field received using the fourth OFDM symbol are received in a different order than the third set of header bits of the second header field received using the third OFDM symbol.	The Accused Instrumentalities comprise wherein the fourth set of header bits of the second header field received using the fourth OFDM symbol are received in a different order than the third set of header bits of the second header field received using the third OFDM symbol. See claim 1 ("wherein the fourth set of header bits of the second header field received using the fourth OFDM symbol are received in a different order than the third set of header bits of the second header field received using the third OFDM symbol.")

Appendix C
Claim Chart for U.S. Patent No. 10,079,707

Claim 10	Wi-Fi 6 Accused Instrumentalities
The method of claim 9, wherein the reception of the same header bits in the second OFDM symbol provides diversity to increase a likelihood of correctly receiving header information of the second packet type.	The Accused Instrumentalities comprise wherein the reception of the same header bits in the second OFDM symbol provides diversity to increase a likelihood of correctly receiving header information of the second packet type. See claim 2.

Appendix C
Claim Chart for U.S. Patent No. 10,079,707

Claim 11	Wi-Fi 6 Accused Instrumentalities
The method of claim 9, wherein the reception of the same header bits in the fourth OFDM symbol provides diversity to increase a likelihood of correctly receiving header information of the second packet type.	The Accused Instrumentalities comprise wherein the reception of the same header bits in the fourth OFDM symbol provides diversity to increase a likelihood of correctly receiving header information of the second packet type. See claim 3.

Appendix C
Claim Chart for U.S. Patent No. 10,079,707

Claim 13	Wi-Fi 6 Accused Instrumentalities
The method of claim 9, wherein the wireless transceiver supports one or more wireless standards.	The Accused Instrumentalities comprise wherein the wireless transceiver supports one or more wireless standards. For example, the Accused Instrumentalities comprise a wireless transceiver that supports the IEEE 802.11ax standard, also known as WiFi 6. See claim 5

Appendix D
Claim Chart for U.S. Patent No. 10,917,272

Claim 1	Wi-Fi 6 Accused Instrumentalities
A non-transitory computer-readable information storage media, having stored thereon instructions, that when executed by one or more processors in a transceiver, cause to be performed a method comprising:	The Accused Instrumentalities comprise a non-transitory computer-readable information storage media, having stored thereon instructions, that when executed by one or more processors in a transceiver, cause to be performed a method, that comprises the following technical elements and limitations, as described in the Wi-Fi 6 standard. For example, devices that comply with the IEEE 802.11ax standard ("Wi-Fi 6") comprise a non-transitory computer-readable information storage media, having stored thereon instructions, that when executed by one or more processors in a transceiver, cause to be performed a method. The citations herein to the Wi-Fi 6 standard are further illustrative of the technical specifications implemented in and/or embodied by the Accused Instrumentalities and applicable whether or not the Accused Instrumentalities are standard compliant. For example, Wi-Fi 6 devices comprise a wireless OFDM transceiver that is capable of transmitting and receiving ("transceiving") physical layer protocol data units (PPDUs). This is indicated below:[1]

[1] IEEE Std 802.11ax-2021, Sec. 27.1.1.

Claim 1	Wi-Fi 6 Accused Instrumentalities
	27. High-efficiency (HE) PHY specification **27.1 Introduction** **27.1.1 Introduction to the HE PHY** Clause 27 specifies the PHY entity for a high-efficiency (HE) orthogonal frequency division multiplexing (OFDM) system. In addition to the requirements in Clause 27, an HE STA shall be capable of transmitting and receiving PPDUs that are compliant with the mandatory requirements of the following PHY specifications: — Clause 19 and Clause 21 if the HE STA supports an operating channel width greater than or equal to 80 MHz and is operating in the 5 GHz band. — Clause 19 and Clause 21 transmission and reception on 20 MHz channel width (see 26.17.1) if the HE STA is a 20 MHz-only non-AP HE STA and is operating in the 5 GHz band. — Clause 19 if the HE STA is operating in the 2.4 GHz band. — Clause 17 if the HE STA is operating in the 6 GHz band. It is anticipated that discovery will provide further details of the manner of infringement of the Accused Instrumentalities. Upon information and belief, AX Wireless contends that these infringement contentions are equally applicable to all examples, aspects, applications, configurations, embodiments and instances of Defendants' Wi-Fi 6 devices.
generating, by a wireless Orthogonal Frequency Division Multiplexing (OFDM) communications transmitter, a first packet type comprising a first header	The Accused Instrumentalities comprise generating, by a wireless Orthogonal Frequency Division Multiplexing (OFDM) communications transmitter, a first packet type comprising a first header field, wherein the first header field comprises two parts, a first part comprising a first set of header bits of the first header field and a second part comprising a second set of header bits of the first header field, wherein the first set of header bits of the first header field is different than the second set of header bits of the first header field.

Claim 1	Wi-Fi 6 Accused Instrumentalities
field, wherein the first header field comprises two parts, a first part comprising a first set of header bits of the first header field and a second part comprising a second set of header bits of the first header field, wherein the first set of header bits of the first header field is different than the second set of header bits of the first header field;	For example, Wi-Fi 6 devices comprise generating, by a wireless Orthogonal Frequency Division Multiplexing (OFDM) communications transmitter, a first packet type comprising a first header field, wherein the first header field comprises two parts, a first part comprising a first set of header bits of the first header field and a second part comprising a second set of header bits of the first header field, wherein the first set of header bits of the first header field is different than the second set of header bits of the first header field. For example, Wi-Fi 6 devices comprise generating, by a wireless OFDM communications transmitter, physical layer protocol data units (PPDUs). This is indicated below:[2] **27. High-efficiency (HE) PHY specification** **27.1 Introduction** **27.1.1 Introduction to the HE PHY** Clause 27 specifies the PHY entity for a high-efficiency (HE) orthogonal frequency division multiplexing (OFDM) system. In addition to the requirements in Clause 27, an HE STA shall be capable of transmitting and receiving PPDUs that are compliant with the mandatory requirements of the following PHY specifications: — Clause 19 and Clause 21 if the HE STA supports an operating channel width greater than or equal to 80 MHz and is operating in the 5 GHz band. — Clause 19 and Clause 21 transmission and reception on 20 MHz channel width (see 26.17.1) if the HE STA is a 20 MHz-only non-AP HE STA and is operating in the 5 GHz band. — Clause 19 if the HE STA is operating in the 2.4 GHz band. — Clause 17 if the HE STA is operating in the 6 GHz band. PPDUs include a first packet type comprising a first header field. For example, Wi-Fi 6 devices comprise generating, by a wireless OFDM communications transmitter, the high-efficiency single

[2] IEEE Std 802.11ax-2021, Sec. 27.1.1.

Claim 1	Wi-Fi 6 Accused Instrumentalities
	user physical layer protocol data unit (HE SU PPDU) format, among other PPDU formats:[3] The HE PHY provides support for midambles. Midambles facilitate updating of the channel estimate during HE PPDU reception and might be of use in high mobility scenarios that often result in significant variations of the wireless channel over the duration of a PPDU. An HE STA shall support the following features: — Transmission and reception of an HE SU PPDU that consists of a single RU spanning the entire PPDU bandwidth. See also:[4] **high-efficiency (HE) single-user (SU) physical layer (PHY) protocol data unit (PPDU) (HE SU PPDU):** A PPDU transmitted with HE SU PPDU format. This PPDU carries a single PHY service data unit (PSDU). The HE SU PPDU is a first packet type comprising a first header field. For example, the HE SU PPDU comprises the HE-SIG-A field. This is indicated below:[5]

[3] IEEE Std 802.11ax-2021, Sec. 27.1.1.

[4] IEEE Std 802.11ax-2021, Sec. 3.2.

[5] IEEE Std 802.11ax-2021, Sec. 27.3.4.

Claim 1	Wi-Fi 6 Accused Instrumentalities
	27.3.4 HE PPDU formats Four HE PPDU formats are defined: HE SU PPDU, HE MU PPDU, HE ER SU PPDU, and HE TB PPDU. The HE sounding NDP is a variant of the HE SU PPDU and defined in 27.3.17. The HE TB feedback NDP is a variant of the HE TB PPDU and defined in 27.3.18. NOTE—The HE ER SU PPDU is not a variant of the HE SU PPDU. Requirements related to HE SU PPDUs and HE ER SU PPDUs are specified separately. The format of the HE SU PPDU is defined as in Figure 27-8. This PPDU format is used for SU transmission, and in this format, the HE-SIG-A field is not repeated. 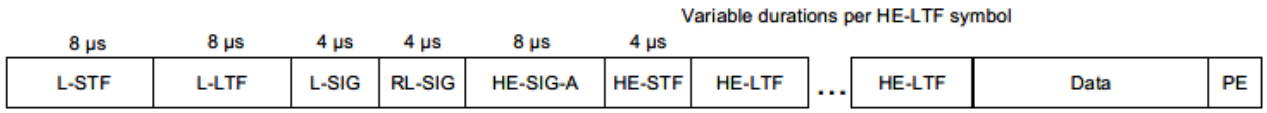 **Figure 27-8—HE SU PPDU format** See also:[6]

[6] IEEE Std 802.11ax-2021, Sec. 27.3.4.

Claim 1	Wi-Fi 6 Accused Instrumentalities
	The fields of the HE PPDU formats are summarized in Table 27-11. **Table 27-11—HE PPDU fields** **Field** / **Description** L-STF — Non-HT Short Training field L-LTF — Non-HT Long Training field L-SIG — Non-HT SIGNAL field RL-SIG — Repeated Non-HT SIGNAL field HE-SIG-A — HE SIGNAL A field HE-SIG-B — HE SIGNAL B field HE-STF — HE Short Training field HE-LTF — HE Long Training field Data — The Data field carrying the PSDU(s) PE — Packet extension field The RL-SIG, HE-SIG-A, HE-STF, HE-LTF, and PE fields are present in all HE PPDU formats. The HE-SIG-B field is present only in the HE MU PPDU. The PE field is defined in 27.3.13. The L-STF, L-LTF, L-SIG, RL-SIG, HE-SIG-A, and HE-SIG-B fields are referred to as *pre-HE modulated fields*, while the HE-STF, HE-LTF, Data, and PE fields are referred to as *HE modulated fields*.

Claim 1	Wi-Fi 6 Accused Instrumentalities
	The first header field comprises two parts. For example, the HE-SIG-A field comprises two subfields, HE-SIG-A1 and HE-SIG-A2. This is indicated below:[7] **27.3.6.6 Construction of HE-SIG-A field** a) For an HE SU PPDU, HE MU PPDU, and HE TB PPDU, the HE-SIG-A field consists of two subfields, HE-SIG-A1 and HE-SIG-A2 as defined in 27.3.11.7, and is constructed as follows: 1) Obtain the HE-SIG-A field values from the TXVECTOR. Add the reserved bits, append the calculated CRC, and then append the N_{tail} tail bits as shown in 27.3.11.7. This results in 52 uncoded bits. 2) BCC encoder: Encode the data by a convolutional encoder at the rate $R = 1/2$ as described in 17.3.5.6. 3) BCC interleaver: Interleave as described in 27.3.12.8. 4) Constellation mapper: BPSK modulate the first 52 interleaved bits as described in 17.3.5.8 to form the first OFDM symbol of the HE-SIG-A field. BPSK modulate the second 52 interleaved bits to form the second OFDM symbol of the HE-SIG-A field. 5) Pilot insertion: Insert pilots as described in 17.3.5.9. 6) Duplicate and phase rotation: Duplicate the HE-SIG-A OFDM symbols over each occupied 20 MHz subchannel of the channel width. Apply the appropriate phase rotation for each occupied 20 MHz subchannel as described in 27.3.10 and 21.3.7.5. 7) CSD per STS: If the TXVECTOR parameter BEAM_CHANGE is 0, apply CSD per STS for each space-time stream and frequency segment as described in 27.3.11.2.2 before spatial mapping. 8) Spatial mapping: If the TXVECTOR parameter BEAM_CHANGE is 0, apply the A matrix and the Q matrix as described in 27.3.11.7.4. 9) IDFT: Compute the inverse discrete Fourier transform. 10) CSD per chain: If the TXVECTOR parameter BEAM_CHANGE is 1 or not present, apply CSD per chain for each transmit chain and frequency segment as described in 27.3.11.2.1. 11) GI and windowing: Prepend a GI ($T_{GI,\text{Pre-HE}}$), and apply windowing as described in 27.3.10. 12) Analog and RF: Upconvert the resulting complex baseband waveform associated with each transmit chain to an RF signal according to the center frequency of the desired channel and transmit. Refer to 27.3.10 and 27.3.11 for details.

[7] IEEE Std 802.11ax-2021, Sec. 27.3.6.6.

<table>
<tr><th>Claim 1</th><th>Wi-Fi 6 Accused Instrumentalities</th></tr>
<tr><td></td><td>
A first part comprises a first set of header bits of the first header field. For example, the HE-SIG-A1 subfield comprises a first set of header bits of HE-SIG-A. This is indicated below:[8]

27.3.11.7.2 Content

The HE-SIG-A field for an HE SU PPDU or an HE ER SU PPDU contains the fields listed in Table 27-18.

Table 27-18—HE-SIG-A field of an HE SU PPDU and HE ER SU PPDU

<table>
<tr><th>Bit</th><th>Field</th><th>Number of bits</th><th>Description</th></tr>
<tr><td colspan="4">HE-SIG-A1 subfield of HE-SIG-A field</td></tr>
<tr><td>B0</td><td>Format</td><td>1</td><td>Differentiate an HE SU PPDU and HE ER SU PPDU from an HE TB PPDU:
Set to 1 for an HE SU PPDU and HE ER SU PPDU.</td></tr>
<tr><td>B1</td><td>Beam Change</td><td>1</td><td>Set to 1 to indicate that the pre-HE modulated fields of the PPDU may be spatially mapped differently from the first symbol of the HE-LTF. Equation (27-6), Equation (27-9), Equation (27-12), Equation (27-14), Equation (27-16), and Equation (27-18) apply if the Beam Change field is 1.
Set to 0 to indicate that the pre-HE modulated fields of the PPDU are spatially mapped the same way as the first symbol of the HE-LTF on each subcarrier. Equation (27-8), Equation (27-10), Equation (27-13), Equation (27-15), Equation (27-17), and Equation (27-19) apply if the Beam Change field is 0.</td></tr>
<tr><td>B2</td><td>UL/DL</td><td>1</td><td>Indicates whether the PPDU is sent UL or DL. Set to 1 if the PPDU is addressed to an AP. Set to 0 otherwise. See TXVECTOR parameter UPLINK_FLAG.</td></tr>
</table>
</td></tr>
</table>

[8] IEEE Std 802.11ax-2021, Sec. 27.3.11.7.2.

Claim 1	Wi-Fi 6 Accused Instrumentalities
	(cont.)

B3–B6	HE-MCS	4	For an HE SU PPDU: Set to *n* for HE-MCS *n*, where *n* = 0, 1, 2, …, 11. Values 12–15 are reserved. For an HE ER SU PPDU with Bandwidth field set to 0 (242-tone RU): Set to *n* for HE-MCS *n*, where *n* = 0, 1, 2. Values 3–15 are reserved. For an HE ER SU PPDU with Bandwidth field set to 1 (upper frequency 106-tone RU): Set to 0 for HE-MCS 0. Values 1–15 are reserved.
B7	DCM	1	Indicates whether DCM is applied to the Data field for the HE-MCS indicated. See Table 27-19 for the interpretation of this field. NOTE—DCM is applicable to only HE-MCSs 0, 1, 3, and 4. DCM is applicable to only 1 and 2 spatial streams.
B8–B13	BSS Color	6	An identifier of the BSS. See TXVECTOR parameter BSS_COLOR.

Claim 1	Wi-Fi 6 Accused Instrumentalities
	(cont.)

Table 27-18—HE-SIG-A field of an HE SU PPDU and HE ER SU PPDU *(continued)*

Bit	Field	Number of bits	Description
B14	Reserved	1	Reserved and set to 1.
B15–B18	Spatial Reuse	4	Indicates whether spatial reuse modes are allowed during the transmission of this PPDU: Set to a value from Table 27-22 (see 26.11.6 and 26.10).
B19–B20	Bandwidth	2	For an HE SU PPDU: Set to 0 for 20 MHz. Set to 1 for 40 MHz. Set to 2 for 80 MHz. Set to 3 for 160 MHz and 80+80 MHz. For an HE ER SU PPDU: Set to 0 for 242-tone RU. Set to 1 for upper frequency 106-tone RU within the primary 20 MHz. Values 2 and 3 are reserved.
B21–B22	GI+HE-LTF Size	2	Indicates the GI duration and HE-LTF size. See Table 27-19 for the interpretation of this field.
B23–B25	NSTS And Midamble Periodicity	3	If the Doppler field is 0, indicates the number of space-time streams. Set to the number of space-time streams minus 1. For an HE ER SU PPDU, values 2–7 are reserved. If the Doppler field is 1, then B23-B24 indicates the number of space time streams, up to 4, and B25 indicates the midamble periodicity. B23-B24 is set to the number of space time streams minus 1. For an HE ER SU PPDU, values 2 and 3 are reserved. B25 is set to 0 for 10 symbol midamble periodicity, to 1 for 20 symbol midamble periodicity. See TXVECTOR parameter MIDAMBLE_PERIODICITY.

Claim 1	Wi-Fi 6 Accused Instrumentalities
	A second part comprises a second set of header bits of the first header field. For example, the HE-SIG-A2 subfield comprises a second set of header bits of HE-SIG-A. This is indicated below:[9]

Bit	Field	Number of bits	Description
HE-SIG-A2 subfield of HE-SIG-A field			
B0–B6	TXOP	7	Set to 127 to indicate no duration information. Set to a value less than 127 to indicate the closest minimum bound on the duration information for NAV setting and protection of the TXOP as follows: If B0 is 0, the TXOP duration indicated is B1-B6, in units of 8 µs. If B0 is 1, the TXOP duration indicated is B1-B6, in units of 128 µs, plus 512 µs. See TXVECTOR parameter TXOP_DURATION.
B7	Coding	1	Indicates whether BCC or LDPC is used: Set to 0 to indicate BCC Set to 1 to indicate LDPC
B8	LDPC Extra Symbol Segment	1	Indicates the presence of the LDPC extra symbol segment: Set to 1 if an LDPC extra symbol segment is present. Set to 0 if an LDPC extra symbol segment is not present. Reserved and set to 1 if the Coding field is 0.
B9	STBC	1	Indicates whether STBC is applied to the Data field. See Table 27-19 for the interpretation of this field.

[9] IEEE Std 802.11ax-2021, Sec. 27.3.11.7.2.

Claim 1	Wi-Fi 6 Accused Instrumentalities
	(cont.) **Table 27-18—HE-SIG-A field of an HE SU PPDU and HE ER SU PPDU *(continued)*** **Bit** / **Field** / **Number of bits** / **Description** B10 / Beamformed / 1 / Set to 1 if a beamforming steering matrix is applied to the HE modulated fields. Set to 0 otherwise. B11–B12 / Pre-FEC Padding Factor / 2 / Indicates the pre-FEC padding factor: Set to 0 to indicate a pre-FEC padding factor of 4. Set to 1 to indicate a pre-FEC padding factor of 1. Set to 2 to indicate a pre-FEC padding factor of 2. Set to 3 to indicate a pre-FEC padding factor of 3. B13 / PE Disambiguity / 1 / Indicates PE disambiguity as defined in 27.3.13. B14 / Reserved / 1 / Reserved and set to 1. B15 / Doppler / 1 / Set to 1 if one of the following applies: — The number of OFDM symbols in the Data field is larger than the signaled midamble periodicity plus 1 and the midamble is present. — The number of OFDM symbols in the Data field is less than or equal to the signaled midamble periodicity plus 1 (see 27.3.12.16, the midamble is not present, but the channel is fast varying. It recommends that midamble may be used for the PPDUs of the reverse link. Set to 0 otherwise. B16–B19 / CRC / 4 / CRC for bits 0–41 of the HE-SIG-A field (see 27.3.11.7.3). Bits 0–41 of the HE-SIG-A field correspond to bits 0–25 of the HE-SIG-A1 subfield followed by bits 0–15 of the HE-SIG-A2 subfield. B20–B25 / Tail / 6 / Used to terminate the trellis of the convolutional decoder. Set to 0. As shown above, the first set of header bits of the first header field (HE-SIG-A1) is different than the second set of header bits of the first header field (HE-SIG-A2).

Claim 1	Wi-Fi 6 Accused Instrumentalities
	It is anticipated that discovery will provide further details of the manner of infringement of the Accused Instrumentalities. In addition, the foregoing structures may be implemented in alternative configurations and usages that are equivalent to this claim element. In addition, the foregoing structures may be implemented in alternative configurations and usages that are equivalent to this claim element because they perform substantially the same function of generating a first packet type comprising a first header field, wherein the first header field comprises two parts, a first part comprising a first set of header bits of the first header field and a second part comprising a second set of header bits of the first header field, wherein the first set of header bits of the first header field is different than the second set of header bits of the first header field, in substantially the same way of generating a first packet type comprising a first header field, wherein the first header field comprises two parts, a first part comprising a first set of header bits of the first header field and a second part comprising a second set of header bits of the first header field, wherein the first set of header bits of the first header field is different than the second set of header bits of the first header field, to obtain the same result of providing additional diversity, reducing data loss and increasing decoding accuracy. For example, alternative equivalent configurations include the following, separately or in conjunction, which achieve the same functionalities provided by the claimed configurations: alternative configurations of HE PHY and PPDUs, including HE SU PPDU, HE MU PPDU, HE ER SU PPDU and HE TB PPDU; alternative configurations of the packet types or formats, headers fields, parts and bits, including HE-SIG-A, HE-SIG-A1, HE-SIG-A2, HE-SIG-A1-R, HE-SIG-A2-R, HE-SIG-B, HE-STF, HE-LTF, L-STF, L-LTF, L-SIG, RL-SIG and PE; alternative configurations of frequency and channel bands and bandwidth divisions, subdivisions, subchannels and subcarriers; alternative configurations of the HE STA, pre-HE [de]modulated and HE [de]modulated fields, transmitter, receiver, encoder, decoder, modulator and demodulator, and alternative symbols and symbol configuration, in transmitting, receiving, encoding, modulating or generating, including for alternative configurations for SU and/or MU.
generating, by an encoder and a modulator, a first OFDM	The Accused Instrumentalities comprise generating, by an encoder and a modulator, a first OFDM symbol followed by a second OFDM symbol, wherein the first OFDM symbol is used to transmit

Claim 1	Wi-Fi 6 Accused Instrumentalities
symbol followed by a second OFDM symbol, wherein the first OFDM symbol is used to transmit the first part of the first header field and the second OFDM symbol is used to transmit the second part of the first header field;	the first part of the first header field and the second OFDM symbol is used to transmit the second part of the first header field. For example, Wi-Fi 6 devices comprise generating, by an encoder and a modulator, a first OFDM symbol followed by a second OFDM symbol, wherein the first OFDM symbol is used to transmit the first part of the first header field and the second OFDM symbol is used to transmit the second part of the first header field. This is indicated below:[10] **27.3.6.6 Construction of HE-SIG-A field** a) For an HE SU PPDU, HE MU PPDU, and HE TB PPDU, the HE-SIG-A field consists of two subfields, HE-SIG-A1 and HE-SIG-A2 as defined in 27.3.11.7, and is constructed as follows: 1) Obtain the HE-SIG-A field values from the TXVECTOR. Add the reserved bits, append the calculated CRC, and then append the N_{tail} tail bits as shown in 27.3.11.7. This results in 52 uncoded bits. 2) BCC encoder: Encode the data by a convolutional encoder at the rate $R = 1/2$ as described in 17.3.5.6. 3) BCC interleaver: Interleave as described in 27.3.12.8. 4) Constellation mapper: BPSK modulate the first 52 interleaved bits as described in 17.3.5.8 to form the first OFDM symbol of the HE-SIG-A field. BPSK modulate the second 52 interleaved bits to form the second OFDM symbol of the HE-SIG-A field. (cont.)

[10] IEEE Std 802.11ax-2021, Sec. 27.3.6.6.

Claim 1	Wi-Fi 6 Accused Instrumentalities
	5) Pilot insertion: Insert pilots as described in 17.3.5.9. 6) Duplicate and phase rotation: Duplicate the HE-SIG-A OFDM symbols over each occupied 20 MHz subchannel of the channel width. Apply the appropriate phase rotation for each occupied 20 MHz subchannel as described in 27.3.10 and 21.3.7.5. 7) CSD per STS: If the TXVECTOR parameter BEAM_CHANGE is 0, apply CSD per STS for each space-time stream and frequency segment as described in 27.3.11.2.2 before spatial mapping. 8) Spatial mapping: If the TXVECTOR parameter BEAM_CHANGE is 0, apply the A matrix and the Q matrix as described in 27.3.11.7.4. 9) IDFT: Compute the inverse discrete Fourier transform. 10) CSD per chain: If the TXVECTOR parameter BEAM_CHANGE is 1 or not present, apply CSD per chain for each transmit chain and frequency segment as described in 27.3.11.2.1. 11) GI and windowing: Prepend a GI ($T_{GI,\text{Pre-HE}}$), and apply windowing as described in 27.3.10. 12) Analog and RF: Upconvert the resulting complex baseband waveform associated with each transmit chain to an RF signal according to the center frequency of the desired channel and transmit. Refer to 27.3.10 and 27.3.11 for details.

Claim 1	Wi-Fi 6 Accused Instrumentalities
	See also:[11] **27.3.11.7.4 Encoding and modulation** For an HE SU PPDU, HE MU PPDU, and HE TB PPDU, the HE-SIG-A field is composed of two subfields, HE-SIG-A1 and HE-SIG-A2, each containing 26 data bits. The HE-SIG-A1 subfield is transmitted before the HE-SIG-A2 subfield. The data bits of the HE-SIG-A OFDM symbols shall be BCC encoded at rate $R = 1/2$, be interleaved, be mapped to a BPSK constellation, and have pilots inserted following the steps described in 17.3.5.6, 27.3.12.8, 17.3.5.8, and 17.3.5.9, respectively. The constellation mappings of the HE-SIG-A field in an HE SU PPDU, HE MU PPDU, and HE TB PPDU are shown in Figure 27-25. The first half and second half of the stream of 104 complex numbers generated by these steps (before pilot insertion) are divided into two groups of 52 complex numbers, where the first 52 complex numbers form the first OFDM symbol of the HE-SIG-A field and the second 52 complex numbers form the second OFDM symbol of the HE-SIG-A field, respectively. If the TXVECTOR parameter BEAM_CHANGE is 1 or not present, the time domain waveform for the HE-SIG-A field of an HE SU PPDU, HE MU PPDU, and HE TB PPDU, transmitted on frequency segment i_{Seg} and transmit chain i_{TX}, shall be as specified in Equation (27-16). $$r_{\text{HE-SIG-A}}^{(i_{Seg} i_{TX})}(t) = \frac{1}{\sqrt{N_{TX} \cdot N_{\text{HE-SIG-A}}^{\text{Tone}} \cdot \frac{\lvert\Omega_{20\text{MHz}}\rvert}{N_{20\text{MHz}}}}} \sum_{n=0}^{1} w_{T_{SYML}}(t - nT_{SYML}) \sum_{i_{BW} \in \Omega_{20\text{MHz}}} \sum_{k=-28}^{28} \eta_{\text{HE-SIG-A},k} \left(\begin{array}{l} \Upsilon_{(k - K_{\text{Shift}}(i_{BW})),\,\text{BW}}(D_{k,n,20} + p_{n+2} P_k) \\ \cdot \exp(j2\pi(k - K_{\text{Shift}}(i_{\text{BW}}))\Delta_{F,\,\text{Pre-HE}}(t - nT_{SYML} - T_{GI,\,\text{Pre-HE}} - T_{CS}^{i_{TX}})) \end{array} \right) \quad (27\text{-}16)$$

[11] IEEE Std 802.11ax-2021, Sec. 27.3.11.7.4.

Claim 1	Wi-Fi 6 Accused Instrumentalities
	(cont.) where T_{SYML} is given in Table 27-12 $K_{\text{Shift}}(i) = (N_{20\text{MHz}} - 1 - 2i) \cdot 32$ $D_{k,n,20} = \begin{cases} 0, k = 0, \pm 7, \pm 21 \\ d_{M^r_{20}(k),n}, \text{ otherwise} \end{cases}$ $M^r_{20}(k) = \begin{cases} k+28, -28 \le k \le -22 \\ k+27, -20 \le k \le -8 \\ k+26, -6 \le k \le -1 \\ k+25, 1 \le k \le 6 \\ k+24, 8 \le k \le 20 \\ k+23, 22 \le k \le 28 \end{cases}$ $\eta_{\text{HE-SIG-A},k} = \begin{cases} \left[\frac{1}{\sqrt{2}}, 1\right], \text{ for an HE TB PPDU} \\ 1, \text{ otherwise} \end{cases}$ P_k and p_n are defined in 17.3.5.10 $N^{\text{Tone}}_{\text{HE-SIG-A}}$ is defined in Table 27-16 $T^{i_{TX}}_{CS}$ represents the cyclic shift for transmit chain i_{TX} with a value given in 27.3.11.2.1

Claim 1	Wi-Fi 6 Accused Instrumentalities
	(cont.) If the TXVECTOR parameter BEAM_CHANGE is 0, the time domain waveform of the HE-SIG-A field shall be as given by Equation (27-17). $$r_{\text{HE-SIG-A}}^{(i_{Seg}, i_{TX})}(t) = \frac{1}{\sqrt{N_{STS} \cdot N_{\text{HE-SIG-A}}^{\text{Tone}} \cdot \frac{\lvert\Omega_{20\text{MHz}}\rvert}{N_{20\text{MHz}}}}} \sum_{n=0}^{1} w_{T_{SYML}}(t - nT_{SYML}) \quad (27\text{-}17)$$ $$\sum_{i_{BW}=0}^{N_{20\text{MHz}}-1} \sum_{k=-28}^{28} \sum_{m=1}^{N_{STS}} \left(\left[Q_{4(k-K_{\text{Shift}}(i_{BW}))}^{(i_{Seg})} \right]_{i_{TX}, m} \left[A_{\text{HE-LTF}}^{4(k-K_{\text{Shift}}(i_{BW}))} \right]_{m,1} (D_{k,n,20} + p_{n+2}P_k) \cdot \exp(j2\pi(k - K_{\text{Shift}}(i_{\text{BW}}))\Delta_{F,\text{Pre-HE}}(t - nT_{SYML} - T_{\text{GI, Pre-HE}} - T_{CS,HE}(m))) \right)$$ where $T_{CS,\text{HE}}(m)$ represents the cyclic shift for space-time stream m as defined in 27.3.11.2.2 $Q_k^{(i_{Seg})}$ is defined in 27.3.10 $A_{\text{HE-LTF}}^k$ is defined in Equation (27-55)

Claim 1	Wi-Fi 6 Accused Instrumentalities
	See also:[12] 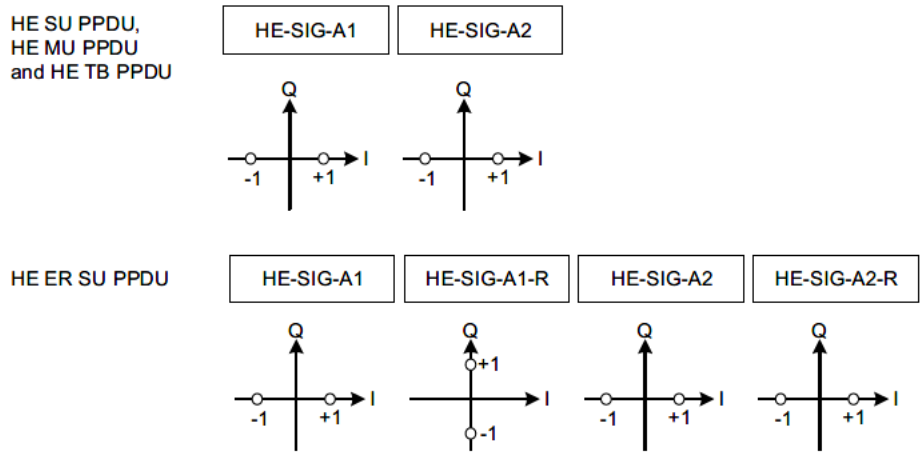 **Figure 27-25—Data subcarrier constellation of HE-SIG-A symbols** It is anticipated that discovery will provide further details of the manner of infringement of the Accused Instrumentalities. In addition, the foregoing structures may be implemented in alternative configurations and usages that are equivalent to this claim element. In addition, the foregoing structures may be implemented in alternative configurations and usages that are equivalent to this claim element because they perform substantially the same function of generating a first OFDM symbol followed by a second OFDM symbol, wherein the first OFDM symbol is used to transmit the first part of the first header field and the second OFDM symbol is used to transmit the second part of the first header field, in substantially the same way of generating a first OFDM symbol followed by a second OFDM symbol, wherein the first OFDM symbol is

[12] IEEE Std 802.11ax-2021, Sec. 27.3.11.7.4.

Claim 1	Wi-Fi 6 Accused Instrumentalities
	used to transmit the first part of the first header field and the second OFDM symbol is used to transmit the second part of the first header field, to obtain the same result of providing additional diversity, reducing data loss and increasing decoding accuracy. For example, alternative equivalent configurations include the following, separately or in conjunction, which achieve the same functionalities provided by the claimed configurations: alternative configurations of HE PHY and PPDUs, including HE SU PPDU, HE MU PPDU, HE ER SU PPDU and HE TB PPDU; alternative configurations of the packet types or formats, headers fields, parts and bits, including HE-SIG-A, HE-SIG-A1, HE-SIG-A2, HE-SIG-A1-R, HE-SIG-A2-R, HE-SIG-B, HE-STF, HE-LTF, L-STF, L-LTF, L-SIG, RL-SIG and PE; alternative configurations of frequency and channel bands and bandwidth divisions, subdivisions, subchannels and subcarriers; alternative configurations of the HE STA, pre-HE [de]modulated and HE [de]modulated fields, transmitter, receiver, encoder, decoder, modulator and demodulator, and alternative symbols and symbol configuration, in transmitting, receiving, encoding, modulating or generating, including for alternative configurations for SU and/or MU.
transmitting, by the wireless OFDM communications transmitter, the first packet type over a wireless communication channel;	The Accused Instrumentalities comprise transmitting, by the wireless OFDM communications transmitter, the first packet type over a wireless communication channel. For example, Wi-Fi 6 devices comprise transmitting, by the wireless OFDM communications transmitter, the first packet type over a wireless communication channel. For example, Wi-Fi 6 devices comprise transmitting PPDUs including the HE SU PPDU via 2.4, 5, and 6 Ghz channels. This is indicated below:[13]

[13] IEEE Std 802.11ax-2021, Sec. 27.1.1.

Claim 1	Wi-Fi 6 Accused Instrumentalities
	27. High-efficiency (HE) PHY specification **27.1 Introduction** **27.1.1 Introduction to the HE PHY** Clause 27 specifies the PHY entity for a high-efficiency (HE) orthogonal frequency division multiplexing (OFDM) system. In addition to the requirements in Clause 27, an HE STA shall be capable of transmitting and receiving PPDUs that are compliant with the mandatory requirements of the following PHY specifications: — Clause 19 and Clause 21 if the HE STA supports an operating channel width greater than or equal to 80 MHz and is operating in the 5 GHz band. — Clause 19 and Clause 21 transmission and reception on 20 MHz channel width (see 26.17.1) if the HE STA is a 20 MHz-only non-AP HE STA and is operating in the 5 GHz band. — Clause 19 if the HE STA is operating in the 2.4 GHz band. — Clause 17 if the HE STA is operating in the 6 GHz band. For 2.4 GHz band operation, the HE PHY is based on HT PHY defined in Clause 19, which in turn is based on the OFDM PHY defined in Clause 17. For 5 GHz band operation, the HE PHY is based on the VHT PHY defined in Clause 21, which in turn is based on the HT PHY defined in Clause 19, which in turn is further based on the OFDM PHY defined in Clause 17. For 6 GHz band operation, the HE PHY is based on the OFDM PHY defined in Clause 17. An HE STA shall support the following features: — Transmission and reception of an HE SU PPDU that consists of a single RU spanning the entire PPDU bandwidth. — Transmission and reception of an HE ER SU PPDU that consists of a 242-tone RU spanning the entire primary 20 MHz PPDU bandwidth. See also:[14]

[14] IEEE Std 802.11ax-2021, Sec. 27.3.11.7.4.

Claim 1	Wi-Fi 6 Accused Instrumentalities
	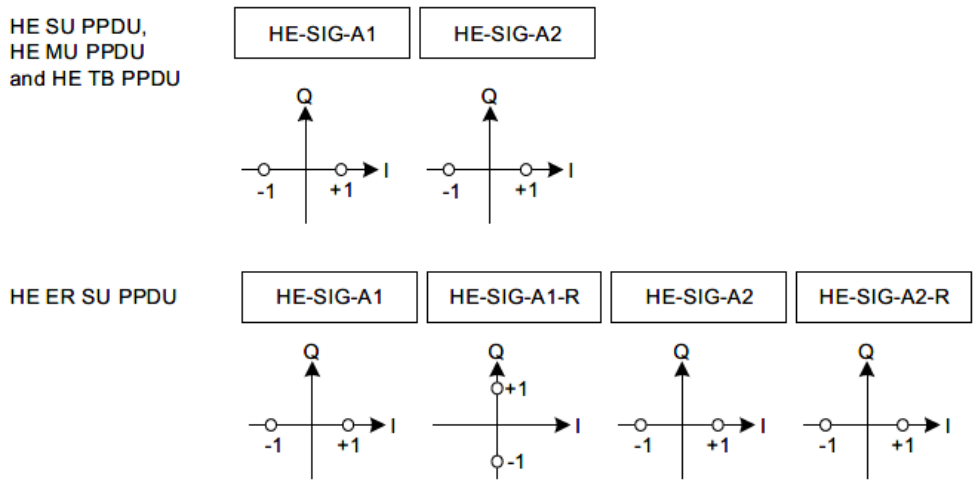 **Figure 27-25—Data subcarrier constellation of HE-SIG-A symbols** It is anticipated that discovery will provide further details of the manner of infringement of the Accused Instrumentalities. In addition, the foregoing structures may be implemented in alternative configurations and usages that are equivalent to this claim element. In addition, the foregoing structures may be implemented in alternative configurations and usages that are equivalent to this claim element because they perform substantially the same function of transmitting the first packet type over a wireless communication channel, in substantially the same way of transmitting the first packet type over a wireless communication channel, to obtain the same result of providing additional diversity thereby increasing the likelihood of decoding the header information correctly. For example, alternative equivalent configurations include the following, separately or in conjunction, which achieve the same functionalities provided by the claimed

Claim 1	Wi-Fi 6 Accused Instrumentalities
	configurations: alternative configurations of HE PHY and PPDUs, including HE SU PPDU, HE MU PPDU, HE ER SU PPDU and HE TB PPDU; alternative configurations of the packet types or formats, headers fields, parts and bits, including HE-SIG-A, HE-SIG-A1, HE-SIG-A2, HE-SIG-A1-R, HE-SIG-A2-R, HE-SIG-B, HE-STF, HE-LTF, L-STF, L-LTF, L-SIG, RL-SIG and PE; alternative configurations of frequency and channel bands and bandwidth divisions, subdivisions, subchannels and subcarriers; alternative configurations of the HE STA, pre-HE [de]modulated and HE [de]modulated fields, transmitter, receiver, encoder, decoder, modulator and demodulator, and alternative symbols and symbol configuration, in transmitting, receiving, encoding, modulating or generating, including for alternative configurations for SU and/or MU.
generating, by the wireless OFDM communications transmitter, a second packet type comprising a second header field, wherein the second header field comprises four parts, a first part comprising a first set of header bits of the second header field, a second part comprising a second set of header bits of the second header field, a third part comprising a third set of header bits of the second header field and a fourth part comprising a fourth set of header bits of the second header field,	The Accused Instrumentalities comprise generating, by the wireless OFDM communications transmitter, a second packet type comprising a second header field, wherein the second header field comprises four parts, a first part comprising a first set of header bits of the second header field, a second part comprising a second set of header bits of the second header field, a third part comprising a third set of header bits of the second header field and a fourth part comprising a fourth set of header bits of the second header field. For example, Wi-Fi 6 devices comprise generating, by the wireless OFDM communications transmitter, a second packet type comprising a second header field, wherein the second header field comprises four parts, a first part comprising a first set of header bits of the second header field, a second part comprising a second set of header bits of the second header field, a third part comprising a third set of header bits of the second header field and a fourth part comprising a fourth set of header bits of the second header field. Wi-Fi 6 devices comprise generating, by the wireless OFDM communications transmitter, a second packet type comprising a second header field. For example, Wi-Fi 6 devices generate, by the wireless OFDM communications transmitter, the high-efficiency extended range single-user PPDU (HE ER SU PPDU) (second packet type), in addition to the HE SU PPDU (first packet type):[15]

[15] IEEE Std 802.11ax-2021, Sec. 27.1.1.

Claim 1	Wi-Fi 6 Accused Instrumentalities
	An HE STA shall support the following features: — Transmission and reception of an HE SU PPDU that consists of a single RU spanning the entire PPDU bandwidth. — Transmission and reception of an HE ER SU PPDU that consists of a 242-tone RU spanning the entire primary 20 MHz PPDU bandwidth. See also:[16] **high-efficiency (HE) extended range (ER) single-user (SU) physical layer (PHY) protocol data unit (PPDU) (HE ER SU PPDU):** A PPDU transmitted with HE ER SU PPDU format. This PPDU carries a single PHY service data unit (PSDU). The second packet type comprises a second header field. For example, the HE ER SU PPDU comprises an HE-SIG-A field:[17]

[16] IEEE Std 802.11ax-2021, Sec. 3.2.

[17] IEEE Std 802.11ax-2021, Sec. 27.3.4.

Claim 1	Wi-Fi 6 Accused Instrumentalities
	The format of the HE ER SU PPDU is defined as in Figure 27-10. This format is used for SU transmission, and in this format, the HE-SIG-A field is twice as long as the HE-SIG-A field in other HE PPDU formats. 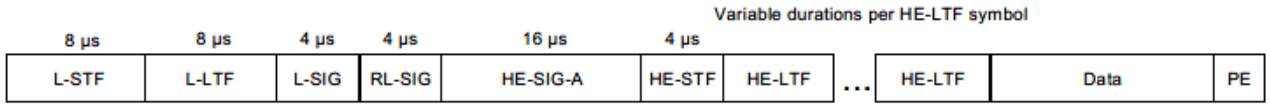 **Figure 27-10—HE ER SU PPDU format** The second header field comprises four parts, a first part comprising a first set of header bits of the second header field, a second part comprising a second set of header bits of the second header field, a third part comprising a third set of header bits of the second header field and a fourth part comprising a fourth set of header bits of the second header field. For example, the HE-SIG-A field in the HE ER SU PPDU comprises four subfields, HE-SIG-A1, HE-SIG-A1-R, HE-SIG-A2, and HE-SIG-A2-R:[18]

[18] IEEE Std 802.11ax-2021, Sec. 27.3.6.6.

Appendix D
Claim Chart for U.S. Patent No. 10,917,272

Claim 1	Wi-Fi 6 Accused Instrumentalities
	b) For an HE ER SU PPDU, the HE-SIG-A field consists of four subfields: HE-SIG-A1, HE-SIG-A1-R, HE-SIG-A2, and HE-SIG-A2-R. The HE-SIG-A1 and HE-SIG-A1-R subfields have the same data bits while the HE-SIG-A2 and HE-SIG-A2-R subfields have the same data bits as defined in 27.3.11.7. The HE-SIG-A field is constructed as follows: 1) Obtain the HE-SIG-A fields from the TXVECTOR. Add the reserved bits, append the calculated CRC, and then append the N_{tail} tail bits as shown in 27.3.11.7. This results in 52 uncoded bits. 2) BCC encoder: Encode the data by a convolutional encoder at the rate $R = 1/2$ as described in 17.3.5.6. 3) BCC interleaver: Interleave the data bits of the HE-SIG-A1 and HE-SIG-A2 subfields as described in 27.3.12.8. The data bits of the HE-SIG-A1-R and HE-SIG-A2-R subfields are not interleaved. 4) Constellation mapper: BPSK modulate the HE-SIG-A1, HE-SIG-A2, and HE-SIG-A2-R data bits as described in 17.3.5.8 to form the first, third, and fourth OFDM symbol of the HE-SIG-A field, respectively. QBPSK modulate the HE-SIG-A1-R encoded data bits to form the second OFDM symbol of the HE-SIG-A field. 5) Pilot insertion: Insert pilots as described in 17.3.5.9. 6) Duplication and phase rotation: Duplicate the HE-SIG-A field over each occupied 20 MHz subchannel of the channel bandwidth. Apply appropriate phase rotation for each occupied 20 MHz subchannel as described in 27.3.10 and 21.3.7.5. 7) CSD per STS: If the TXVECTOR parameter BEAM_CHANGE is 0, apply CSD per STS for each space-time stream and frequency segment as described in 27.3.11.2.2 before spatial mapping. 8) Spatial mapping: If the TXVECTOR parameter BEAM_CHANGE is 0, apply the A matrix and the Q matrix as described in 27.3.11.7.4. 9) IDFT: Compute the inverse Fourier transform. 10) CSD per chain: If the TXVECTOR parameter BEAM_CHANGE is 1 or not present, apply CSD per chain for each transmit chain and frequency segment as described in 27.3.11.2.1. 11) GI and windowing: Prepend a GI ($T_{GI,\text{Pre-HE}}$), and apply windowing as described in 27.3.10. 12) Analog and RF: Upconvert the resulting complex baseband waveform associated with each transmit chain to an RF signal according to the center frequency of the desired channel and transmit. Refer to 27.3.10 and 27.3.11 for details.

Claim 1	Wi-Fi 6 Accused Instrumentalities
	HE-SIG-A1 comprising a first set of header bits of HE-SIG-A, HE-SIG-A1-R comprises a second set of header bits of HE-SIG-A, HE-SIG-A2 comprises a third set of header bits of HE-SIG-A and HE-SIG-A2-R comprises a fourth set of header bits of HE-SIG-A. This is indicated below:[19] For an HE ER SU PPDU, the HE-SIG-A field is composed of four subfields: HE-SIG-A1, HE-SIG-A1-R, HE-SIG-A2, and HE-SIG-A2-R. Each subfield contains 26 data bits. These four subfields are transmitted sequentially from HE-SIG-A1 to HE-SIG-A2-R. The data bits of the HE-SIG-A1 and HE-SIG-A2 subfields shall be BCC encoded at rate $R = 1/2$, be interleaved, be mapped to a BPSK constellation, and have pilots inserted. The HE-SIG-A1-R subfield has the same encoded bits as the HE-SIG-A1 subfield, and the encoded bits shall be mapped to a QBPSK constellation without interleaving and have pilots inserted. The constellation mappings of the HE-SIG-A field in an HE ER SU PPDU are shown in Figure 27-25. The QBPSK constellation on the HE-SIG-A1-R subfield is used to differentiate between an HE ER SU PPDU and an HE MU PPDU when $m = 1$ in Equation (27-11). The HE-SIG-A2-R subfield has the same encoded bits as the HE-SIG-A2 subfield, and the encoded bits shall be mapped to a BPSK constellation without interleaving and have pilots inserted. BCC encoding, data interleaving, constellation mapping, and pilot insertion follow the steps described in 17.3.5.6, 27.3.12.8, 17.3.5.8, and 17.3.5.9, respectively. 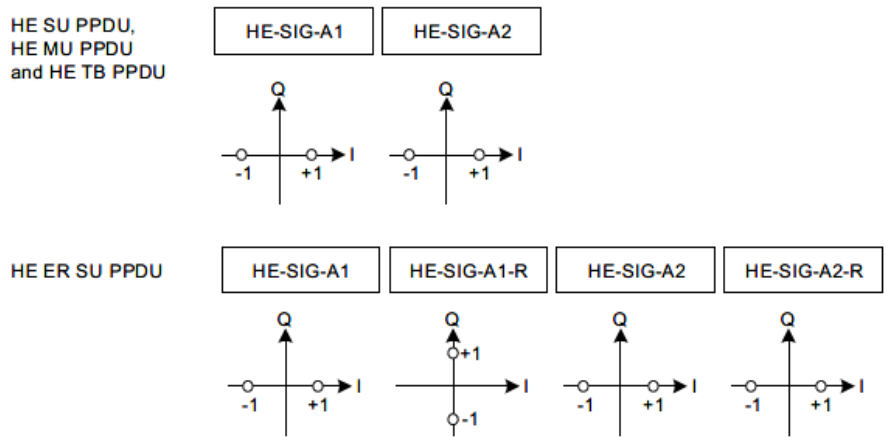 **Figure 27-25—Data subcarrier constellation of HE-SIG-A symbols**

[19] IEEE Std 802.11ax-2021, Sec. 27.3.11.4.

Claim 1	Wi-Fi 6 Accused Instrumentalities
	See also:[20] **Table 27-18—HE-SIG-A field of an HE SU PPDU and HE ER SU PPDU**

Bit	Field	Number of bits	Description
HE-SIG-A1 subfield of HE-SIG-A field			
B0	Format	1	Differentiate an HE SU PPDU and HE ER SU PPDU from an HE TB PPDU: Set to 1 for an HE SU PPDU and HE ER SU PPDU.
B1	Beam Change	1	Set to 1 to indicate that the pre-HE modulated fields of the PPDU may be spatially mapped differently from the first symbol of the HE-LTF. Equation (27-6), Equation (27-9), Equation (27-12), Equation (27-14), Equation (27-16), and Equation (27-18) apply if the Beam Change field is 1. Set to 0 to indicate that the pre-HE modulated fields of the PPDU are spatially mapped the same way as the first symbol of the HE-LTF on each subcarrier. Equation (27-8), Equation (27-10), Equation (27-13), Equation (27-15), Equation (27-17), and Equation (27-19) apply if the Beam Change field is 0.
B2	UL/DL	1	Indicates whether the PPDU is sent UL or DL. Set to 1 if the PPDU is addressed to an AP. Set to 0 otherwise. See TXVECTOR parameter UPLINK_FLAG.
B3–B6	HE-MCS	4	For an HE SU PPDU: Set to n for HE-MCS n, where n = 0, 1, 2, …, 11. Values 12–15 are reserved. For an HE ER SU PPDU with Bandwidth field set to 0 (242-tone RU): Set to n for HE-MCS n, where n = 0, 1, 2. Values 3–15 are reserved. For an HE ER SU PPDU with Bandwidth field set to 1 (upper frequency 106-tone RU): Set to 0 for HE-MCS 0. Values 1–15 are reserved.
B7	DCM	1	Indicates whether DCM is applied to the Data field for the HE-MCS indicated. See Table 27-19 for the interpretation of this field. NOTE—DCM is applicable to only HE-MCSs 0, 1, 3, and 4. DCM is applicable to only 1 and 2 spatial streams.
B8–B13	BSS Color	6	An identifier of the BSS. See TXVECTOR parameter BSS_COLOR.

[20] IEEE Std 802.11ax-2021, Sec. 27.3.11.7.2

Claim 1	Wi-Fi 6 Accused Instrumentalities
	Table 27-18—HE-SIG-A field of an HE SU PPDU and HE ER SU PPDU *(continued)*

Bit	Field	Number of bits	Description
B14	Reserved	1	Reserved and set to 1.
B15–B18	Spatial Reuse	4	Indicates whether spatial reuse modes are allowed during the transmission of this PPDU: Set to a value from Table 27-22 (see 26.11.6 and 26.10).
B19–B20	Bandwidth	2	For an HE SU PPDU: Set to 0 for 20 MHz. Set to 1 for 40 MHz. Set to 2 for 80 MHz. Set to 3 for 160 MHz and 80+80 MHz. For an HE ER SU PPDU: Set to 0 for 242-tone RU. Set to 1 for upper frequency 106-tone RU within the primary 20 MHz. Values 2 and 3 are reserved.
B21–B22	GI+HE-LTF Size	2	Indicates the GI duration and HE-LTF size. See Table 27-19 for the interpretation of this field.
B23–B25	NSTS And Midamble Periodicity	3	If the Doppler field is 0, indicates the number of space-time streams. Set to the number of space-time streams minus 1. For an HE ER SU PPDU, values 2–7 are reserved. If the Doppler field is 1, then B23-B24 indicates the number of space time streams, up to 4, and B25 indicates the midamble periodicity. B23-B24 is set to the number of space time streams minus 1. For an HE ER SU PPDU, values 2 and 3 are reserved. B25 is set to 0 for 10 symbol midamble periodicity, to 1 for 20 symbol midamble periodicity. See TXVECTOR parameter MIDAMBLE_PERIODICITY.
HE-SIG-A2 subfield of HE-SIG-A field			
B0–B6	TXOP	7	Set to 127 to indicate no duration information. Set to a value less than 127 to indicate the closest minimum bound on the duration information for NAV setting and protection of the TXOP as follows: If B0 is 0, the TXOP duration indicated is B1-B6, in units of 8 µs. If B0 is 1, the TXOP duration indicated is B1-B6, in units of 128 µs, plus 512 µs. See TXVECTOR parameter TXOP_DURATION.
B7	Coding	1	Indicates whether BCC or LDPC is used: Set to 0 to indicate BCC Set to 1 to indicate LDPC
B8	LDPC Extra Symbol Segment	1	Indicates the presence of the LDPC extra symbol segment: Set to 1 if an LDPC extra symbol segment is present. Set to 0 if an LDPC extra symbol segment is not present. Reserved and set to 1 if the Coding field is 0.
B9	STBC	1	Indicates whether STBC is applied to the Data field. See Table 27-19 for the interpretation of this field.

Claim 1	Wi-Fi 6 Accused Instrumentalities
	(cont.) **Table 27-18—HE-SIG-A field of an HE SU PPDU and HE ER SU PPDU *(continued)*** **Bit** / **Field** / **Number of bits** / **Description** B10 / Beamformed / 1 / Set to 1 if a beamforming steering matrix is applied to the HE modulated fields. Set to 0 otherwise. B11–B12 / Pre-FEC Padding Factor / 2 / Indicates the pre-FEC padding factor: Set to 0 to indicate a pre-FEC padding factor of 4. Set to 1 to indicate a pre-FEC padding factor of 1. Set to 2 to indicate a pre-FEC padding factor of 2. Set to 3 to indicate a pre-FEC padding factor of 3. B13 / PE Disambiguity / 1 / Indicates PE disambiguity as defined in 27.3.13. B14 / Reserved / 1 / Reserved and set to 1. B15 / Doppler / 1 / Set to 1 if one of the following applies: — The number of OFDM symbols in the Data field is larger than the signaled midamble periodicity plus 1 and the midamble is present. — The number of OFDM symbols in the Data field is less than or equal to the signaled midamble periodicity plus 1 (see 27.3.12.16, the midamble is not present, but the channel is fast varying. It recommends that midamble may be used for the PPDUs of the reverse link. Set to 0 otherwise. B16–B19 / CRC / 4 / CRC for bits 0–41 of the HE-SIG-A field (see 27.3.11.7.3). Bits 0–41 of the HE-SIG-A field correspond to bits 0–25 of the HE-SIG-A1 subfield followed by bits 0–15 of the HE-SIG-A2 subfield. B20–B25 / Tail / 6 / Used to terminate the trellis of the convolutional decoder. Set to 0. It is anticipated that discovery will provide further details of the manner of infringement of the Accused Instrumentalities. In addition, the foregoing structures may be implemented in alternative configurations and usages that are equivalent to this claim element. In addition, the foregoing structures may be implemented in alternative configurations and usages that are equivalent to this claim element because they perform substantially the same function of generating a second packet type comprising a second header field, wherein the second header field comprises four parts, a first part comprising a first set of header bits of the second header field, a second part comprising a second set of header bits of the second header field, a third part comprising a third set of header bits of the second header field and a fourth part comprising a

Claim 1	Wi-Fi 6 Accused Instrumentalities
	fourth set of header bits of the second header field, in substantially the same way of a second packet type comprising a second header field, wherein the second header field comprises four parts, a first part comprising a first set of header bits of the second header field, a second part comprising a second set of header bits of the second header field, a third part comprising a third set of header bits of the second header field and a fourth part comprising a fourth set of header bits of the second header field, to obtain the same result of providing additional diversity, reducing data loss and increasing decoding accuracy. For example, alternative equivalent configurations include the following, separately or in conjunction, which achieve the same functionalities provided by the claimed configurations: alternative configurations of HE PHY and PPDUs, including HE SU PPDU, HE MU PPDU, HE ER SU PPDU and HE TB PPDU; alternative configurations of the packet types or formats, headers fields, parts and bits, including HE-SIG-A, HE-SIG-A1, HE-SIG-A2, HE-SIG-A1-R, HE-SIG-A2-R, HE-SIG-B, HE-STF, HE-LTF, L-STF, L-LTF, L-SIG, RL-SIG and PE; alternative configurations of frequency and channel bands and bandwidth divisions, subdivisions, subchannels and subcarriers; alternative configurations of the HE STA, pre-HE [de]modulated and HE [de]modulated fields, transmitter, receiver, encoder, decoder, modulator and demodulator, and alternative symbols and symbol configuration, in transmitting, receiving, encoding, modulating or generating, including for alternative configurations for SU and/or MU.
wherein the first set of header bits of the second header field is the same as the second set of header bits of the second header field, wherein the third set of header bits of the second header field is the same as the fourth set of header bits of the second header field,	The Accused Instrumentalities comprise wherein the first set of header bits of the second header field is the same as the second set of header bits of the second header field, wherein the third set of header bits of the second header field is the same as the fourth set of header bits of the second header field. For example, Wi-Fi 6 devices comprise wherein the first set of header bits of the second header field is the same as the second set of header bits of the second header field, wherein the third set of header bits of the second header field is the same as the fourth set of header bits of the second header field.

Claim 1	Wi-Fi 6 Accused Instrumentalities
	For example, the HE-SIG-A1 subfield (first set of header bits) has the same encoded bits as the HE-SIG-A1-R subfield (second set of header bits), and the HE-SIG-A2 subfield (third set of header bits) has the same encoded bits as the HE-SIG-A2-R (fourth set of header bits):[21] For an HE ER SU PPDU, the HE-SIG-A field is composed of four subfields: HE-SIG-A1, HE-SIG-A1-R, HE-SIG-A2, and HE-SIG-A2-R. Each subfield contains 26 data bits. These four subfields are transmitted sequentially from HE-SIG-A1 to HE-SIG-A2-R. The data bits of the HE-SIG-A1 and HE-SIG-A2 subfields shall be BCC encoded at rate $R = 1/2$, be interleaved, be mapped to a BPSK constellation, and have pilots inserted. The HE-SIG-A1-R subfield has the same encoded bits as the HE-SIG-A1 subfield, and the encoded bits shall be mapped to a QBPSK constellation without interleaving and have pilots inserted. The constellation mappings of the HE-SIG-A field in an HE ER SU PPDU are shown in Figure 27-25. The QBPSK constellation on the HE-SIG-A1-R subfield is used to differentiate between an HE ER SU PPDU and an HE MU PPDU when $m = 1$ in Equation (27-11). The HE-SIG-A2-R subfield has the same encoded bits as the HE-SIG-A2 subfield, and the encoded bits shall be mapped to a BPSK constellation without interleaving and have pilots inserted. BCC encoding, data interleaving, constellation mapping, and pilot insertion follow the steps described in 17.3.5.6, 27.3.12.8, 17.3.5.8, and 17.3.5.9, respectively. See also:[22] b) For an HE ER SU PPDU, the HE-SIG-A field consists of four subfields: HE-SIG-A1, HE-SIG-A1-R, HE-SIG-A2, and HE-SIG-A2-R. The HE-SIG-A1 and HE-SIG-A1-R subfields have the same data bits while the HE-SIG-A2 and HE-SIG-A2-R subfields have the same data bits as defined in 27.3.11.7. The HE-SIG-A field is constructed as follows: It is anticipated that discovery will provide further details of the manner of infringement of the Accused Instrumentalities. In addition, the foregoing structures may be implemented in alternative configurations and usages that are equivalent to this claim element. In addition, the foregoing structures may be implemented in alternative configurations and usages that are equivalent to this claim element because they perform substantially the same function of

[21] IEEE Std 802.11ax-2021, Sec. 27.3.11.4.

[22] IEEE Std 802.11ax-2021, Sec. 27.3.6.6.

Claim 1	Wi-Fi 6 Accused Instrumentalities
	receiving a packet type, wherein the first set of header bits of the second header field is the same as the second set of header bits of the second header field, wherein the third set of header bits of the second header field is the same as the fourth set of header bits of the second header field, in substantially the same way of receiving a packet type, wherein the first set of header bits of the second header field is the same as the second set of header bits of the second header field, wherein the third set of header bits of the second header field is the same as the fourth set of header bits of the second header field, to obtain the same result of providing additional diversity, reducing data loss and increasing decoding accuracy. For example, alternative equivalent configurations include the following, separately or in conjunction, which achieve the same functionalities provided by the claimed configurations: alternative configurations of HE PHY and PPDUs, including HE SU PPDU, HE MU PPDU, HE ER SU PPDU and HE TB PPDU; alternative configurations of the packet types or formats, headers fields, parts and bits, including HE-SIG-A, HE-SIG-A1, HE-SIG-A2, HE-SIG-A1-R, HE-SIG-A2-R, HE-SIG-B, HE-STF, HE-LTF, L-STF, L-LTF, L-SIG, RL-SIG and PE; alternative configurations of frequency and channel bands and bandwidth divisions, subdivisions, subchannels and subcarriers; alternative configurations of the HE STA, pre-HE [de]modulated and HE [de]modulated fields, transmitter, receiver, encoder, decoder, modulator and demodulator, and alternative symbols and symbol configuration, in transmitting, receiving, encoding, modulating or generating, including for alternative configurations for SU and/or MU.
generating, by the encoder and the modulator, a first OFDM symbol followed by a second OFDM symbol followed by a third OFDM symbol followed by a fourth OFDM symbol, wherein the first OFDM symbol is used to transmit the first part of the second header field, the second OFDM symbol is used	The Accused Instrumentalities comprise generating, by the encoder and the modulator, a first OFDM symbol followed by a second OFDM symbol followed by a third OFDM symbol followed by a fourth OFDM symbol, wherein the first OFDM symbol is used to transmit the first part of the second header field, the second OFDM symbol is used to transmit the second part of the second header field, the third OFDM symbol is used to transmit the third part of the second header field, the fourth OFDM symbol is used to transmit the fourth part of the second header field. For example, Wi-Fi 6 devices comprise generating, by the encoder and the modulator, a first OFDM symbol followed by a second OFDM symbol followed by a third OFDM symbol followed by a fourth OFDM symbol, wherein the first OFDM symbol is used to transmit the first part of the second header field, the second OFDM symbol is used to transmit the second part of the second

Claim 1	Wi-Fi 6 Accused Instrumentalities
to transmit the second part of the second header field, the third OFDM symbol is used to transmit the third part of the second header field, the fourth OFDM symbol is used to transmit the fourth part of the second header field,	header field, the third OFDM symbol is used to transmit the third part of the second header field, the fourth OFDM symbol is used to transmit the fourth part of the second header field. This is indicated below:[23] b) For an HE ER SU PPDU, the HE-SIG-A field consists of four subfields: HE-SIG-A1, HE-SIG-A1-R, HE-SIG-A2, and HE-SIG-A2-R. The HE-SIG-A1 and HE-SIG-A1-R subfields have the same data bits while the HE-SIG-A2 and HE-SIG-A2-R subfields have the same data bits as defined in 27.3.11.7. The HE-SIG-A field is constructed as follows: 1) Obtain the HE-SIG-A fields from the TXVECTOR. Add the reserved bits, append the calculated CRC, and then append the N_{tail} tail bits as shown in 27.3.11.7. This results in 52 uncoded bits. 2) BCC encoder: Encode the data by a convolutional encoder at the rate $R = 1/2$ as described in 17.3.5.6. 3) BCC interleaver: Interleave the data bits of the HE-SIG-A1 and HE-SIG-A2 subfields as described in 27.3.12.8. The data bits of the HE-SIG-A1-R and HE-SIG-A2-R subfields are not interleaved. 4) Constellation mapper: BPSK modulate the HE-SIG-A1, HE-SIG-A2, and HE-SIG-A2-R data bits as described in 17.3.5.8 to form the first, third, and fourth OFDM symbol of the HE-SIG-A field, respectively. QBPSK modulate the HE-SIG-A1-R encoded data bits to form the second OFDM symbol of the HE-SIG-A field. See also:[24]

[23] IEEE Std 802.11ax-2021, Sec. 27.3.6.6.

[24] IEEE Std 802.11ax-2021, Sec. 27.3.11.4.

Claim 1	Wi-Fi 6 Accused Instrumentalities
	For an HE ER SU PPDU, the HE-SIG-A field is composed of four subfields: HE-SIG-A1, HE-SIG-A1-R, HE-SIG-A2, and HE-SIG-A2-R. Each subfield contains 26 data bits. These four subfields are transmitted sequentially from HE-SIG-A1 to HE-SIG-A2-R. The data bits of the HE-SIG-A1 and HE-SIG-A2 subfields shall be BCC encoded at rate $R = 1/2$, be interleaved, be mapped to a BPSK constellation, and have pilots inserted. The HE-SIG-A1-R subfield has the same encoded bits as the HE-SIG-A1 subfield, and the encoded bits shall be mapped to a QBPSK constellation without interleaving and have pilots inserted. The constellation mappings of the HE-SIG-A field in an HE ER SU PPDU are shown in Figure 27-25. The QBPSK constellation on the HE-SIG-A1-R subfield is used to differentiate between an HE ER SU PPDU and an HE MU PPDU when $m = 1$ in Equation (27-11). The HE-SIG-A2-R subfield has the same encoded bits as the HE-SIG-A2 subfield, and the encoded bits shall be mapped to a BPSK constellation without interleaving and have pilots inserted. BCC encoding, data interleaving, constellation mapping, and pilot insertion follow the steps described in 17.3.5.6, 27.3.12.8, 17.3.5.8, and 17.3.5.9, respectively. 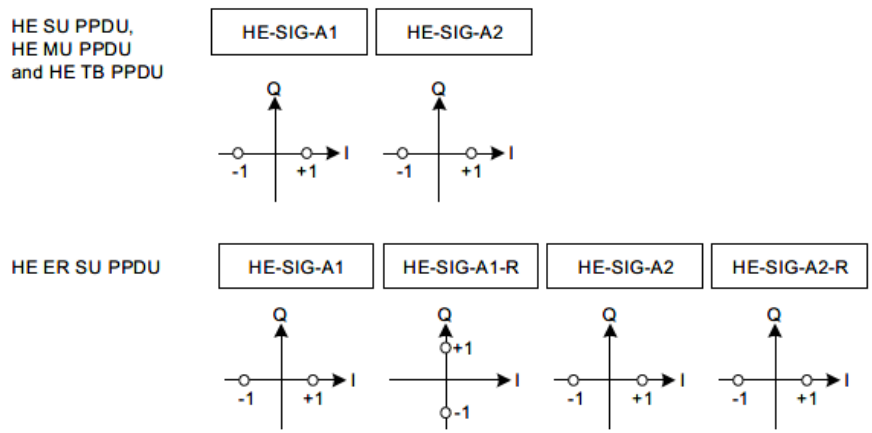 **Figure 27-25—Data subcarrier constellation of HE-SIG-A symbols** It is anticipated that discovery will provide further details of the manner of infringement of the Accused Instrumentalities. In addition, the foregoing structures may be implemented in alternative configurations and usages that are equivalent to this claim element.

Claim 1	Wi-Fi 6 Accused Instrumentalities
	In addition, the foregoing structures may be implemented in alternative configurations and usages that are equivalent to this claim element because they perform substantially the same function of generating a first OFDM symbol followed by a second OFDM symbol followed by a third OFDM symbol followed by a fourth OFDM symbol, wherein the first OFDM symbol is used to transmit the first part of the second header field, the second OFDM symbol is used to transmit the second part of the second header field, the third OFDM symbol is used to transmit the third part of the second header field, the fourth OFDM symbol is used to transmit the fourth part of the second header field, in substantially the same way of generating a first OFDM symbol followed by a second OFDM symbol followed by a third OFDM symbol followed by a fourth OFDM symbol, wherein the first OFDM symbol is used to transmit the first part of the second header field, the second OFDM symbol is used to transmit the second part of the second header field, the third OFDM symbol is used to transmit the third part of the second header field, the fourth OFDM symbol is used to transmit the fourth part of the second header field, to obtain the same result of providing additional diversity, reducing data loss and increasing decoding accuracy. For example, alternative equivalent configurations include the following, separately or in conjunction, which achieve the same functionalities provided by the claimed configurations: alternative configurations of HE PHY and PPDUs, including HE SU PPDU, HE MU PPDU, HE ER SU PPDU and HE TB PPDU; alternative configurations of the packet types or formats, headers fields, parts and bits, including HE-SIG-A, HE-SIG-A1, HE-SIG-A2, HE-SIG-A1-R, HE-SIG-A2-R, HE-SIG-B, HE-STF, HE-LTF, L-STF, L-LTF, L-SIG, RL-SIG and PE; alternative configurations of frequency and channel bands and bandwidth divisions, subdivisions, subchannels and subcarriers; alternative configurations of the HE STA, pre-HE [de]modulated and HE [de]modulated fields, transmitter, receiver, encoder, decoder, modulator and demodulator, and alternative symbols and symbol configuration, in transmitting, receiving, encoding, modulating or generating, including for alternative configurations for SU and/or MU.
wherein the second set of header bits of the second header field transmitted using the second OFDM symbol are transmitted in a different	The Accused Instrumentalities comprise wherein the second set of header bits of the second header field transmitted using the second OFDM symbol are transmitted in a different order than the first set of header bits of the second header field transmitted using the first OFDM symbol.

Claim 1	Wi-Fi 6 Accused Instrumentalities
order than the first set of header bits of the second header field transmitted using the first OFDM symbol,	For example, in Wi-Fi 6 devices, the second set of header bits of the second header field transmitted using the second OFDM symbol are transmitted in a different order than the first set of header bits of the second header field transmitted using the first OFDM symbol. For example, the bits of HE-SIG-A1-R are not interleaved, whereas the bits of HE-SIG-A1 are interleaved. This is indicated below:[25] b) For an HE ER SU PPDU, the HE-SIG-A field consists of four subfields: HE-SIG-A1, HE-SIG-A1-R, HE-SIG-A2, and HE-SIG-A2-R. The HE-SIG-A1 and HE-SIG-A1-R subfields have the same data bits while the HE-SIG-A2 and HE-SIG-A2-R subfields have the same data bits as defined in 27.3.11.7. The HE-SIG-A field is constructed as follows: 1) Obtain the HE-SIG-A fields from the TXVECTOR. Add the reserved bits, append the calculated CRC, and then append the N_{tail} tail bits as shown in 27.3.11.7. This results in 52 uncoded bits. 2) BCC encoder: Encode the data by a convolutional encoder at the rate $R = 1/2$ as described in 17.3.5.6. 3) BCC interleaver: Interleave the data bits of the HE-SIG-A1 and HE-SIG-A2 subfields as described in 27.3.12.8. The data bits of the HE-SIG-A1-R and HE-SIG-A2-R subfields are not interleaved. Interleaving the bits of HE-SIG-A1 and not interleaving the bits of HE-SIG-A1-R results in a different transmission order of bits as between HE-SIG-A1 and HE-SIG-A1-R. See also:[26]

[25] IEEE Std 802.11ax-2021, Sec. 27.3.6.6.

[26] IEEE Std 802.11ax-2021, Sec. 27.3.12.8.

Claim 1	Wi-Fi 6 Accused Instrumentalities
	27.3.12.8 BCC interleavers For ease of explanation, the operation of the interleaver is described only for the SU case. For user u of an MU transmission, the interleaver operates in the same way on the output bits for the user from the stream parser by replacing N_{SS}, N_{CBPSS}, N_{CBPS}, and N_{BPSCS} with $N_{SS,u}$, $N_{CBPSS,u}$, $N_{CBPS,u}$ and $N_{BPSCS,u}$, respectively. That is, the operation of the interleaver is the same as if the transmission were an SU one, consisting of bits from only that user. The BCC interleaver operation is specified in 21.3.10.8. The interleaver parameters, N_{COL}, N_{ROW}, and N_{ROT}, for the Data field depend on the RU size and whether or not DCM is used and are defined in the "RU size" column of Table 27-35. (cont.)

Claim 1	Wi-Fi 6 Accused Instrumentalities

Table 27-35—BCC interleaver parameters

DCM	Parameter	RU size (tones)				HE-SIG-A/ HE-SIG-B (tones)
		26	52	106	242	56
Not used	N_{COL}	8	16	17	26	13
	N_{ROW}	$3 \times N_{BPSCS}$	$3 \times N_{BPSCS}$	$6 \times N_{BPSCS}$	$9 \times N_{BPSCS}$	$4 \times N_{BPSCS}$
	N_{ROT}	2	11	29	58	—
Used	N_{COL}	4	8	17	13	13
	N_{ROW}	$3 \times N_{BPSCS}$	$3 \times N_{BPSCS}$	$3 \times N_{BPSCS}$	$9 \times N_{BPSCS}$	$2 \times N_{BPSCS}$
	N_{ROT}	2	2	11	29	—

The interleaver parameters, N_{COL} and N_{ROW}, for the HE-SIG-A and HE-SIG-B fields are defined in the "HE-SIG-A/HE-SIG-B" column of Table 27-35.

NOTE—DCM is not used on the HE-SIG-A field.

Claim 1	Wi-Fi 6 Accused Instrumentalities
	See also:[27] **21.3.10.8 BCC interleaver** For ease of explanation, the operation of the interleaver is described for the SU case. For user u of an MU transmission, the interleaver operates in the same way on the output bits for the user from the stream parser by replacing N_{SS}, N_{CBPSS}, N_{CBPSSI}, and N_{BPSCS} with $N_{SS,u}$, $N_{CBPSS,u}$, $N_{CBPSSI,u}$, and $N_{BPSCS,u}$, respectively. That is, the operation of the interleaver is the same as if the transmission were an SU one, consisting of bits from only that user. This subclause describes the interleaver used in the case of BCC encoding. The interleaver described in this subclause shall be bypassed in the case of LDPC encoding. In a 20 MHz, 40 MHz, or 80 MHz VHT PPDU transmission, the bits at the output of the stream parser are processed in groups of N_{CBPS} bits. Each of these groups is divided into N_{SS} blocks of N_{CBPSS} bits, and each block shall be interleaved by an interleaver based on the Clause 17 interleaver. In a 160 MHz or an 80+80 MHz VHT PPDU transmission, each frequency subblock of $N_{CBPSS}/2$ output bits from the segment parser is interleaved by the interleaver for 80 MHz defined in this subclause. This interleaver, which is based on entering the data in rows, and reading it out in columns, has a different number of columns N_{COL} and rows N_{ROW} for different bandwidths. The values of N_{COL} and N_{ROW} are given in Table 21-17. **Table 21-17—Number of rows and columns in the interleaver** Parameter: N_{COL} — 20 MHz: 13; 40 MHz: 18; 80 MHz: 26 Parameter: N_{ROW} — 20 MHz: $4 \times N_{BPSCS}$; 40 MHz: $6 \times N_{BPSCS}$; 80 MHz: $9 \times N_{BPSCS}$ Parameter: N_{ROT} ($N_{SS} \leq 4$) — 20 MHz: 11; 40 MHz: 29; 80 MHz: 58 Parameter: N_{ROT} ($N_{SS} > 4$) — 20 MHz: 6; 40 MHz: 13; 80 MHz: 28

[27] IEEE Std 802.11-2020, Sec. 21.3.10.8.

Claim 1	Wi-Fi 6 Accused Instrumentalities
	(cont.) After the operations based on the Clause 17 interleaver have been applied and if more than one spatial stream exists, a third operation called *frequency rotation* is applied to the additional spatial streams. The parameter for the frequency rotation is N_{ROT}. The values of N_{ROT} are given in Table 21-17. An additional parameter is the spatial stream index $i_{SS} = 1, 2, \ldots, N_{SS}$. The output of the third operation is a function of the spatial stream index. The interleaving is defined using three permutations. The first permutation is given by the rule shown in Equation (21-76). $$i = N_{ROW}(k \bmod N_{COL}) + \left\lfloor \frac{k}{N_{COL}} \right\rfloor, k = 0, 1, \ldots, N_{CBPSSI} - 1 \quad (21\text{-}76)$$ The second permutation is defined by the rule shown in Equation (21-77). $$j = s\left\lfloor \frac{i}{s} \right\rfloor + \left(i + N_{CBPSSI} - \left\lfloor \frac{N_{COL} \cdot i}{N_{CBPSSI}} \right\rfloor\right) \bmod s, \quad i = 0, 1, \ldots, N_{CBPSSI} - 1 \quad (21\text{-}77)$$ where s is defined in Equation (21-68)

Claim 1	Wi-Fi 6 Accused Instrumentalities
	(cont.) If $2 \le N_{SS} \le 4$, a frequency rotation is applied to the output of the second permutation as shown in Equation (21-78). $$r = \left\{ j - \left[(2(i_{SS} - 1)) \bmod 3 + 3 \left\lfloor \frac{i_{SS} - 1}{3} \right\rfloor \right] \cdot N_{ROT} \cdot N_{BPSCS} \right\} \bmod N_{CBPSSI}, \quad (21\text{-}78)$$ $$j = 0, 1, \ldots, N_{CBPSSI} - 1$$ where $i_{SS} = 1, 2, \ldots, N_{SS}$ is the spatial steam index on which this interleaver is operating If $N_{SS} > 4$, a frequency rotation is applied to the output of the second permutation as shown in Equation (21-79). $$r = \{ j - J(i_{SS}) \cdot N_{ROT} \cdot N_{BPSCS} \} \bmod N_{CBPSSI}, j = 0, 1, \ldots, N_{CBPSSI} - 1 \quad (21\text{-}79)$$ where $i_{SS} = 1, 2, \ldots, N_{SS}$ is the spatial steam index on which this interleaver is operating, and $J(i_{SS})$ is an integer as defined in Table 21-18.

Claim 1	Wi-Fi 6 Accused Instrumentalities
	(cont.) **Table 21-18—$J(i_{SS})$ values** i_{SS} | $J(i_{SS})$ 1 | 0 2 | 5 3 | 2 4 | 7 5 | 3 6 | 6 7 | 1 8 | 4

Claim 1	Wi-Fi 6 Accused Instrumentalities
	Interleaving is a three-step permutation process that begins with interleaving using an interleaver based on the "Clause 17 interleaver," as indicated above. Per Clause 17, interleaving is performed separately for every OFDM symbol. The first permutation causes adjacent coded bits to be mapped onto nonadjacent subcarriers. The second causes adjacent coded bits to be mapped alternately onto less and more significant constellation bits:[28] **17.3.5.7 Data interleaving** All encoded data bits shall be interleaved by a block interleaver with a block size corresponding to the number of bits in a single OFDM symbol, N_{CBPS}. The interleaver is defined by a two-step permutation. The first permutation causes adjacent coded bits to be mapped onto nonadjacent subcarriers. The second causes adjacent coded bits to be mapped alternately onto less and more significant bits of the constellation and, thereby, long runs of low reliability (LSB) bits are avoided. As further indicated above, after the operations based on the Clause 17 interleaver have been applied, and if more than one spatial stream exists, a third operation called frequency rotation is applied to the additional spatial stream. The purpose of the interleaver, as indicated above, is to process OFDM symbols such that adjacent bits are not associated with a single subcarrier or adjacent subcarriers. Instead, adjacent bits are permuted onto nonadjacent subcarriers and onto more or less significant bits, i.e., reordered. It is anticipated that discovery will provide further details of the manner of infringement of the Accused Instrumentalities. In addition, the foregoing structures may be implemented in alternative configurations and usages that are equivalent to this claim element. In addition, the foregoing structures may be implemented in alternative configurations and usages that are equivalent to this claim element because they perform substantially the same function of receiving a packet type, wherein the first set of header bits of the second header field is the same as

[28] IEEE Std 802.11-2020, Sec. 17.3.5.7.

Claim 1	Wi-Fi 6 Accused Instrumentalities
	the second set of header bits of the second header field, wherein the third set of header bits of the second header field is the same as the fourth set of header bits of the second header field, in substantially the same way of receiving a packet type, wherein the first set of header bits of the second header field is the same as the second set of header bits of the second header field, wherein the third set of header bits of the second header field is the same as the fourth set of header bits of the second header field, to obtain the same result of providing additional diversity, reducing data loss and increasing decoding accuracy. For example, alternative equivalent configurations include the following, separately or in conjunction, which achieve the same functionalities provided by the claimed configurations: alternative configurations of HE PHY and PPDUs, including HE SU PPDU, HE MU PPDU, HE ER SU PPDU and HE TB PPDU; alternative configurations of the packet types or formats, headers fields, parts and bits, including HE-SIG-A, HE-SIG-A1, HE-SIG-A2, HE-SIG-A1-R, HE-SIG-A2-R, HE-SIG-B, HE-STF, HE-LTF, L-STF, L-LTF, L-SIG, RL-SIG and PE; alternative configurations of frequency and channel bands and bandwidth divisions, subdivisions, subchannels and subcarriers; alternative configurations of the HE STA, pre-HE [de]modulated and HE [de]modulated fields, transmitter, receiver, encoder, decoder, modulator and demodulator, and alternative symbols and symbol configuration, in transmitting, receiving, encoding, modulating or generating, including for alternative configurations for SU and/or MU.
wherein the fourth set of header bits of the second header field transmitted using the fourth OFDM symbol are transmitted in a different order than the third set of header bits of the second header field transmitted using the third OFDM symbol; and	The Accused Instrumentalities comprise wherein the fourth set of header bits of the second header field transmitted using the fourth OFDM symbol are transmitted in a different order than the third set of header bits of the second header field transmitted using the third OFDM symbol. For example, in Wi-Fi 6 devices, the fourth set of header bits of the second header field transmitted using the fourth OFDM symbol are transmitted in a different order than the third set of header bits of the second header field transmitted using the third OFDM symbol. For example, the bits of HE-SIG-A2-R are not interleaved, whereas the bits of HE-SIG-A2 are interleaved. This is indicated below:[29]

[29] IEEE Std 802.11ax-2021, Sec. 27.3.6.6.

Claim 1	Wi-Fi 6 Accused Instrumentalities
	b) For an HE ER SU PPDU, the HE-SIG-A field consists of four subfields: HE-SIG-A1, HE-SIG-A1-R, HE-SIG-A2, and HE-SIG-A2-R. The HE-SIG-A1 and HE-SIG-A1-R subfields have the same data bits while the HE-SIG-A2 and HE-SIG-A2-R subfields have the same data bits as defined in 27.3.11.7. The HE-SIG-A field is constructed as follows: 1) Obtain the HE-SIG-A fields from the TXVECTOR. Add the reserved bits, append the calculated CRC, and then append the N_{tail} tail bits as shown in 27.3.11.7. This results in 52 uncoded bits. 2) BCC encoder: Encode the data by a convolutional encoder at the rate $R = 1/2$ as described in 17.3.5.6. 3) BCC interleaver: Interleave the data bits of the HE-SIG-A1 and HE-SIG-A2 subfields as described in 27.3.12.8. The data bits of the HE-SIG-A1-R and HE-SIG-A2-R subfields are not interleaved. Interleaving the bits of HE-SIG-A2 and not interleaving the bits of HE-SIG-A2-R results in a different transmission order of bits as between HE-SIG-A2 and HE-SIG-A2-R. It is anticipated that discovery will provide further details of the manner of infringement of the Accused Instrumentalities. In addition, the foregoing structures may be implemented in alternative configurations and usages that are equivalent to this claim element. In addition, the foregoing structures may be implemented in alternative configurations and usages that are equivalent to this claim element because they perform substantially the same function of receiving a packet type, wherein the first set of header bits of the second header field is the same as the second set of header bits of the second header field, wherein the third set of header bits of the second header field is the same as the fourth set of header bits of the second header field, in substantially the same way of receiving a packet type, wherein the first set of header bits of the second header field is the same as the second set of header bits of the second header field, wherein the third set of header bits of the second header field is the same as the fourth set of header bits of the second header field, to obtain the same result of providing additional diversity, reducing data loss and increasing decoding accuracy.

Claim 1	Wi-Fi 6 Accused Instrumentalities
	For example, alternative equivalent configurations include the following, separately or in conjunction, which achieve the same functionalities provided by the claimed configurations: alternative configurations of HE PHY and PPDUs, including HE SU PPDU, HE MU PPDU, HE ER SU PPDU and HE TB PPDU; alternative configurations of the packet types or formats, headers fields, parts and bits, including HE-SIG-A, HE-SIG-A1, HE-SIG-A2, HE-SIG-A1-R, HE-SIG-A2-R, HE-SIG-B, HE-STF, HE-LTF, L-STF, L-LTF, L-SIG, RL-SIG and PE; alternative configurations of frequency and channel bands and bandwidth divisions, subdivisions, subchannels and subcarriers; alternative configurations of the HE STA, pre-HE [de]modulated and HE [de]modulated fields, transmitter, receiver, encoder, decoder, modulator and demodulator, and alternative symbols and symbol configuration, in transmitting, receiving, encoding, modulating or generating, including for alternative configurations for SU and/or MU.
transmitting, by the wireless OFDM communications transmitter, the second packet type over the wireless communication channel.	The Accused Instrumentalities comprise transmitting, by the wireless OFDM communications transmitter, the second packet type over the wireless communication channel. For example, Wi-Fi 6 devices comprise transmitting, by the wireless OFDM communications transmitter, the second packet type over the wireless communication channel. For example, Wi-Fi 6 comprises transmitting PPDUs including the HE ER SU PPDU via 2.4, 5, and 6 Ghz channels. It further comprises transmitting an HE ER SU PPDU that consists of a 242-tone RU spanning the entire primary 20 MHz PPDU bandwidth.[30] This is indicated below:[31]

[30] IEEE Std 802.11ax-2021, Sec. 27.1.1.

[31] IEEE Std 802.11ax-2021, Sec. 27.1.1.

Claim 1	Wi-Fi 6 Accused Instrumentalities
	27. High-efficiency (HE) PHY specification **27.1 Introduction** **27.1.1 Introduction to the HE PHY** Clause 27 specifies the PHY entity for a high-efficiency (HE) orthogonal frequency division multiplexing (OFDM) system. In addition to the requirements in Clause 27, an HE STA shall be capable of transmitting and receiving PPDUs that are compliant with the mandatory requirements of the following PHY specifications: — Clause 19 and Clause 21 if the HE STA supports an operating channel width greater than or equal to 80 MHz and is operating in the 5 GHz band. — Clause 19 and Clause 21 transmission and reception on 20 MHz channel width (see 26.17.1) if the HE STA is a 20 MHz-only non-AP HE STA and is operating in the 5 GHz band. — Clause 19 if the HE STA is operating in the 2.4 GHz band. — Clause 17 if the HE STA is operating in the 6 GHz band. For 2.4 GHz band operation, the HE PHY is based on HT PHY defined in Clause 19, which in turn is based on the OFDM PHY defined in Clause 17. For 5 GHz band operation, the HE PHY is based on the VHT PHY defined in Clause 21, which in turn is based on the HT PHY defined in Clause 19, which in turn is further based on the OFDM PHY defined in Clause 17. For 6 GHz band operation, the HE PHY is based on the OFDM PHY defined in Clause 17. See also:[32] The HE PHY provides support for midambles. Midambles facilitate updating of the channel estimate during HE PPDU reception and might be of use in high mobility scenarios that often result in significant variations of the wireless channel over the duration of a PPDU.

[32] IEEE Std 802.11ax-2021, Sec. 27.1.1.

Claim 1	Wi-Fi 6 Accused Instrumentalities
	An HE STA shall support the following features: — Transmission and reception of an HE SU PPDU that consists of a single RU spanning the entire PPDU bandwidth. — Transmission and reception of an HE ER SU PPDU that consists of a 242-tone RU spanning the entire primary 20 MHz PPDU bandwidth. It is anticipated that discovery will provide further details of the manner of infringement of the Accused Instrumentalities. In addition, the foregoing structures may be implemented in alternative configurations and usages that are equivalent to this claim element. In addition, the foregoing structures may be implemented in alternative configurations and usages that are equivalent to this claim element because they perform substantially the same function of transmitting the second packet type over the wireless communication channel, in substantially the same way of transmitting the second packet type over the wireless communication channel, to obtain the same result of providing additional diversity, reducing data loss and increasing decoding accuracy. For example, alternative equivalent configurations include the following, separately or in conjunction, which achieve the same functionalities provided by the claimed configurations: alternative configurations of HE PHY and PPDUs, including HE SU PPDU, HE MU PPDU, HE ER SU PPDU and HE TB PPDU; alternative configurations of the packet types or formats, headers fields, parts and bits, including HE-SIG-A, HE-SIG-A1, HE-SIG-A2, HE-SIG-A1-R, HE-SIG-A2-R, HE-SIG-B, HE-STF, HE-LTF, L-STF, L-LTF, L-SIG, RL-SIG and PE; alternative configurations of frequency and channel bands and bandwidth divisions, subdivisions, subchannels and subcarriers; alternative configurations of the HE STA, pre-HE [de]modulated and HE [de]modulated fields, transmitter, receiver, encoder, decoder, modulator and demodulator, and alternative symbols and symbol configuration, in transmitting, receiving, encoding, modulating or generating, including for alternative configurations for SU and/or MU.

Claim 2	Wi-Fi 6 Accused Instrumentalities
The media of claim 1, wherein the transmission of the same header bits in the second OFDM symbol provides diversity to increase a likelihood of correctly communicating header information of the second packet type.	The Accused Instrumentalities comprise wherein the transmission of the same header bits in the second OFDM symbol provides diversity to increase a likelihood of correctly communicating header information of the second packet type. For example, Wi-Fi 6 devices comprise wherein the transmission/reception of the same header bits in the second OFDM symbol provides diversity to increase a likelihood of correctly communicating header information of the second packet type. This is indicated below:[33] **Sept 2015** **doc.: IEEE 802.11-15/0826r2** **HE-SIGA transmission for range extension** **Date:** 2015-07-12

[33]September 2015 Working Group Comments, IEEE Std 802.11-15/0826r2.

Claim 2	Wi-Fi 6 Accused Instrumentalities
	Transmitter of HE-SIG-A • **We propose to use the time repetition and bypassing the bit interleaver of repeated HE-SIG-A symbols to enhance robustness of HE-SIG-A in outdoor scenarios.** 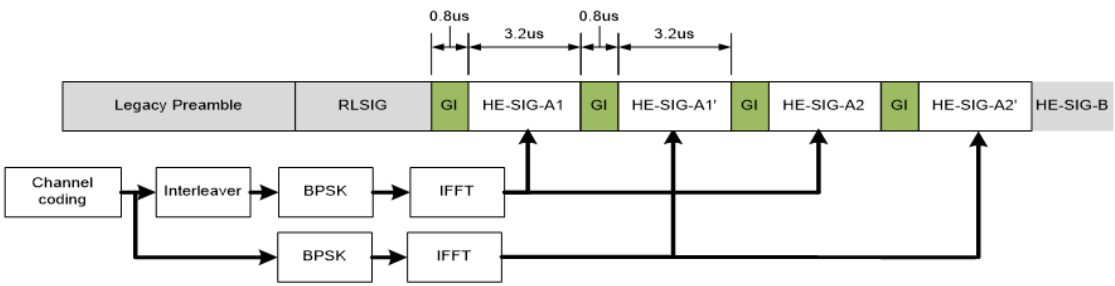

Claim 2	Wi-Fi 6 Accused Instrumentalities
	Conclusion • **Repeated HE-SIGA is needed in many use cases including range extension and outdoor channel operation.** • **An implementation friendly repetition method is proposed to harvest the frequency diversity gain.** These working group comments were adopted by the IEEE 802.11ax standard and are implemented by the Accused Instrumentalities. This is indicated below:[34] Example transmitter block diagrams are shown in Figure 27-13 to Figure 27-22. The actual structure of the transmitter is implementation dependent. In particular, Figure 27-13 shows the transmit process for the L-SIG, RL-SIG, and HE-SIG-A fields of an HE PPDU using one frequency segment when the Beam Change subfield in the HE-SIG-A field is 1. These transmit blocks are also used to generate the L-STF and L-LTF fields of the HE PPDU when the Beam Change subfield in the HE-SIG-A field is 1, with the following exceptions: — The BCC encoder and interleaver and the constellation mapper are not used when generating the L-STF and L-LTF fields. — The BCC interleaver is not applied in the 2nd and the 4th OFDM symbols of the HE-SIG-A field in the HE ER SU PPDU.

[34] IEEE Std 802.11ax-2021, Sec. 27.3.5.

Claim 2	Wi-Fi 6 Accused Instrumentalities
	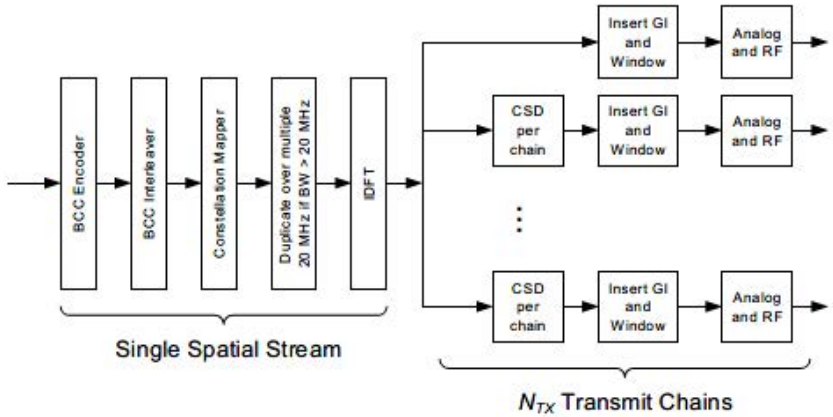 **Figure 27-13—Transmitter block diagram for L-SIG, RL-SIG, and HE-SIG-A fields for an HE SU PPDU and HE ER SU PPDU if Beam Change subfield is 1** It is anticipated that discovery will provide further details of the manner of infringement of the Accused Instrumentalities. In addition, the foregoing structures may be implemented in alternative configurations and usages that are equivalent to this claim element. In addition, the foregoing structures may be implemented in alternative configurations and usages that are equivalent to this claim element because they perform substantially the same function of transmission/reception of the same header bits in the second OFDM symbol provides diversity to increase a likelihood of correctly communicating header information of the second packet type, in substantially the same way of transmission/reception of the same header bits in the second OFDM symbol provides diversity to increase a likelihood of correctly communicating header information of the second packet type, to obtain the same result of providing additional diversity, reducing data loss and increasing decoding accuracy.

Claim 2	Wi-Fi 6 Accused Instrumentalities
	For example, alternative equivalent configurations include the following, separately or in conjunction, which achieve the same functionalities provided by the claimed configurations: alternative configurations of HE PHY and PPDUs, including HE SU PPDU, HE MU PPDU, HE ER SU PPDU and HE TB PPDU; alternative configurations of the packet types or formats, headers fields, parts and bits, including HE-SIG-A, HE-SIG-A1, HE-SIG-A2, HE-SIG-A1-R, HE-SIG-A2-R, HE-SIG-B, HE-STF, HE-LTF, L-STF, L-LTF, L-SIG, RL-SIG and PE; alternative configurations of frequency and channel bands and bandwidth divisions, subdivisions, subchannels and subcarriers; alternative configurations of the HE STA, pre-HE [de]modulated and HE [de]modulated fields, transmitter, receiver, encoder, decoder, modulator and demodulator, and alternative symbols and symbol configuration, in transmitting, receiving, encoding, modulating or generating, including for alternative configurations for SU and/or MU.

Claim 3	Wi-Fi 6 Accused Instrumentalities
The media of claim 1, wherein the transmission of the same header bits in the fourth OFDM symbol provides diversity to increase a likelihood of correctly communicating header information of the second packet type.	The Accused Instrumentalities comprise wherein the transmission/reception of the same header bits in the fourth OFDM symbol provides diversity to increase a likelihood of correctly communicating header information of the second packet type. For example, Wi-Fi 6 devices comprise wherein the transmission/reception of the same header bits in the fourth OFDM symbol provides diversity to increase a likelihood of correctly communicating header information of the second packet type. This is indicated below:[35]

[35]September 2015 Working Group Comments, IEEE Std 802.11-15/0826r2.

Claim 3	Wi-Fi 6 Accused Instrumentalities
	Sept 2015 **doc.: IEEE 802.11-15/0826r2** **HE-SIGA transmission for range extension** **Date:** 2015-07-12 **Transmitter of HE-SIG-A** • **We propose to use the time repetition and bypassing the bit interleaver of repeated HE-SIG-A symbols to enhance robustness of HE-SIG-A in outdoor scenarios.** 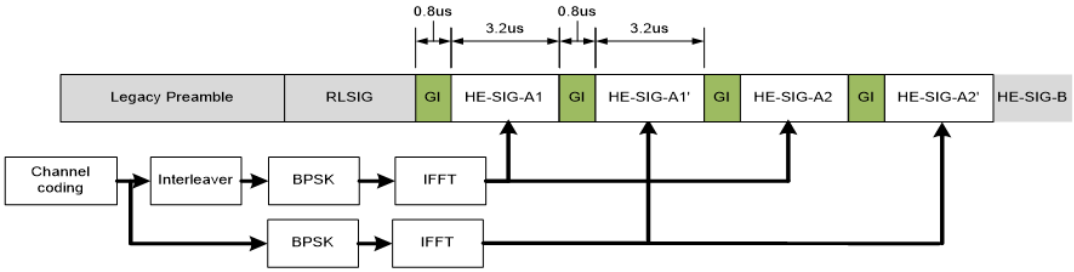

Claim 3	Wi-Fi 6 Accused Instrumentalities
	Conclusion • **Repeated HE-SIGA is needed in many use cases including range extension and outdoor channel operation.** • **An implementation friendly repetition method is proposed to harvest the frequency diversity gain.** These working group comments were adopted by the IEEE 802.11ax standard and are implemented by the Accused Instrumentalities. This is indicated below:[36] Example transmitter block diagrams are shown in Figure 27-13 to Figure 27-22. The actual structure of the transmitter is implementation dependent. In particular, Figure 27-13 shows the transmit process for the L-SIG, RL-SIG, and HE-SIG-A fields of an HE PPDU using one frequency segment when the Beam Change subfield in the HE-SIG-A field is 1. These transmit blocks are also used to generate the L-STF and L-LTF fields of the HE PPDU when the Beam Change subfield in the HE-SIG-A field is 1, with the following exceptions: — The BCC encoder and interleaver and the constellation mapper are not used when generating the L-STF and L-LTF fields. — The BCC interleaver is not applied in the 2nd and the 4th OFDM symbols of the HE-SIG-A field in the HE ER SU PPDU.

[36] IEEE Std 802.11ax-2021, Sec. 27.3.5.

Claim 3	Wi-Fi 6 Accused Instrumentalities
	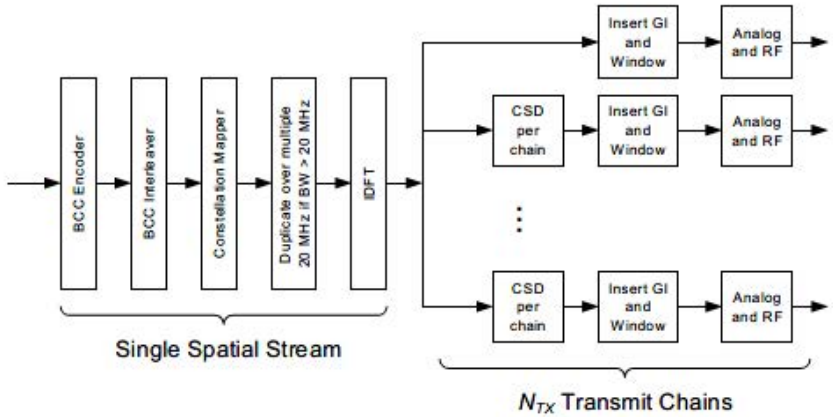 **Figure 27-13—Transmitter block diagram for L-SIG, RL-SIG, and HE-SIG-A fields for an HE SU PPDU and HE ER SU PPDU if Beam Change subfield is 1** It is anticipated that discovery will provide further details of the manner of infringement of the Accused Instrumentalities. In addition, the foregoing structures may be implemented in alternative configurations and usages that are equivalent to this claim element. In addition, the foregoing structures may be implemented in alternative configurations and usages that are equivalent to this claim element because they perform substantially the same function of transmission/reception of the same header bits in the fourth OFDM symbol to provide diversity to increase a likelihood of correctly communicating header information of the second packet type, in substantially the same way of transmission/reception of the same header bits in the fourth OFDM symbol to provide diversity to increase a likelihood of correctly communicating header information of the second packet type, to obtain the same result of providing additional diversity, reducing data loss and increasing decoding accuracy.

Claim 3	Wi-Fi 6 Accused Instrumentalities
	For example, alternative equivalent configurations include the following, separately or in conjunction, which achieve the same functionalities provided by the claimed configurations: alternative configurations of HE PHY and PPDUs, including HE SU PPDU, HE MU PPDU, HE ER SU PPDU and HE TB PPDU; alternative configurations of the packet types or formats, headers fields, parts and bits, including HE-SIG-A, HE-SIG-A1, HE-SIG-A2, HE-SIG-A1-R, HE-SIG-A2-R, HE-SIG-B, HE-STF, HE-LTF, L-STF, L-LTF, L-SIG, RL-SIG and PE; alternative configurations of frequency and channel bands and bandwidth divisions, subdivisions, subchannels and subcarriers; alternative configurations of the HE STA, pre-HE [de]modulated and HE [de]modulated fields, transmitter, receiver, encoder, decoder, modulator and demodulator, and alternative symbols and symbol configuration, in transmitting, receiving, encoding, modulating or generating, including for alternative configurations for SU and/or MU.

Claim 5	Wi-Fi 6 Accused Instrumentalities
The media of claim 1, wherein the wireless transceiver supports one or more wireless standards.	The Accused Instrumentalities comprise wherein the wireless transceiver supports one or more wireless standards. For example, the Accused Instrumentalities comprise a wireless transceiver that supports the IEEE 802.11ax standard, also known as WiFi 6. For example, Defendants advertise the Accused Instrumentalities as utilizing a Wi-Fi 6 or 802.11ax transceiver, such as a wireless card or modem, e.g., Wireless Intel Dual Band Wi-Fi 6 AX211 2x2 802.11ax 160MHz wireless card, and/or as Wi-Fi CERTIFIED 6.[37] [38] The standard requires that 802.11ax products be capable of transmitting and receiving PPDUs that are compliant with the mandatory requirements of the PHY specifications as follows:[39]

[37] *See, e.g.*, https://www.dell.com/en-us/shop/dell-laptops/sr/laptops/wi-fi-6?appliedRefinements=37766 (search results for laptops filtered by "Wi-Fi 6"); https://www.dell.com/en-us/shop/desktop-computers/sr/desktops/wi-fi-6?appliedRefinements=38804 (search results for desktops filtered by "Wi-Fi 6"); and https://www.dell.com/en-us/shop/dell-laptops/latitude-3520-laptop/spd/latitude-15-3520-laptop/s061l3520us (showing "Intel Dual Band Wi-Fi 6 AX201 2x2 802.11ax 160MHz + Bluetooth 5.1" for "Wireless" for the Latitude 3520 Laptop).

[38] *See, e.g.*, https://www.hp.com/us-en/shop/sitesearch?keyword=wi-fi%206 (search results for products with keyword "Wi-Fi 6"); https://www.hp.com/us-en/shop/pdp/hp-spectre-x360-2-in-1-laptop-16-f1747nr (showing "Intel® Wi-Fi 6E AX211 (2x2)" for the "Wireless Technology" of HP Spectre x360 2-in-1 Laptop 16-f1747nr); https://www.hp.com/us-en/shop/pdp/hp-envy-desktop-te02-0250xt-pc-3y3r0av-1 (showing "Realtek Wi-Fi 6 (2x2)" for the "Wireless Technology" of HP ENVY Desktop TE02-0250xt PC).

[39] IEEE Std 802.11ax-2021, Sec. 27.3.11.7.2

Claim 5	Wi-Fi 6 Accused Instrumentalities
	27. High-efficiency (HE) PHY specification **27.1 Introduction** **27.1.1 Introduction to the HE PHY** Clause 27 specifies the PHY entity for a high-efficiency (HE) orthogonal frequency division multiplexing (OFDM) system. In addition to the requirements in Clause 27, an HE STA shall be capable of transmitting and receiving PPDUs that are compliant with the mandatory requirements of the following PHY specifications: — Clause 19 and Clause 21 if the HE STA supports an operating channel width greater than or equal to 80 MHz and is operating in the 5 GHz band. — Clause 19 and Clause 21 transmission and reception on 20 MHz channel width (see 26.17.1) if the HE STA is a 20 MHz-only non-AP HE STA and is operating in the 5 GHz band. — Clause 19 if the HE STA is operating in the 2.4 GHz band. — Clause 17 if the HE STA is operating in the 6 GHz band. It is anticipated that discovery will provide further details of the manner of infringement of the Accused Instrumentalities. In addition, the foregoing structures may be implemented in alternative configurations and usages that are equivalent to this claim element. In addition, the foregoing structures may be implemented in alternative configurations and usages that are equivalent to this claim element because they perform substantially the same function of supporting one or more wireless standards, in substantially the same way of supporting one or more wireless standards, to obtain the same result of providing additional diversity, reducing data loss and increasing decoding accuracy. For example, alternative equivalent configurations include the following, separately or in conjunction, which achieve the same functionalities provided by the claimed configurations: alternative configurations of HE PHY and PPDUs, including HE SU PPDU, HE MU PPDU, HE ER SU PPDU and HE TB PPDU; alternative configurations of the packet types or

Claim 5	Wi-Fi 6 Accused Instrumentalities
	formats, headers fields, parts and bits, including HE-SIG-A, HE-SIG-A1, HE-SIG-A2, HE-SIG-A1-R, HE-SIG-A2-R, HE-SIG-B, HE-STF, HE-LTF, L-STF, L-LTF, L-SIG, RL-SIG and PE; alternative configurations of frequency and channel bands and bandwidth divisions, subdivisions, subchannels and subcarriers; alternative configurations of the HE STA, pre-HE [de]modulated and HE [de]modulated fields, transmitter, receiver, encoder, decoder, modulator and demodulator, and alternative symbols and symbol configuration, in transmitting, receiving, encoding, modulating or generating, including for alternative configurations for SU and/or MU.

<table>
<tr><th>Claim 7</th><th>Wi-Fi 6 Accused Instrumentalities</th></tr>
<tr><td>The media of claim 1, wherein the first packet type is transmitted in a first channel bandwidth and the second packet type is transmitted in a second channel bandwidth, wherein the first channel bandwidth is at least two times wider than the second channel bandwidth.</td><td>
The Accused Instrumentalities comprise wherein the first packet type is transmitted in a first channel bandwidth and the second packet type is transmitted in a second channel bandwidth, wherein the first channel bandwidth is at least two times wider than the second channel bandwidth.
For example, Wi-Fi 6 devices comprise wherein the first packet type is transmitted in a first channel bandwidth and the second packet type is transmitted in a second channel bandwidth, wherein the first channel bandwidth is at least two times wider than the second channel bandwidth. This is indicated below:[40]
Table 27-18—HE-SIG-A field of an HE SU PPDU and HE ER SU PPDU (continued)
<table>
<tr><th>Bit</th><th>Field</th><th>Number of bits</th><th>Description</th></tr>
<tr><td>B14</td><td>Reserved</td><td>1</td><td>Reserved and set to 1.</td></tr>
<tr><td>B15–B18</td><td>Spatial Reuse</td><td>4</td><td>Indicates whether spatial reuse modes are allowed during the transmission of this PPDU:
Set to a value from Table 27-22 (see 26.11.6 and 26.10).</td></tr>
<tr><td>B19–B20</td><td>Bandwidth</td><td>2</td><td>For an HE SU PPDU:
Set to 0 for 20 MHz.
Set to 1 for 40 MHz.
Set to 2 for 80 MHz.
Set to 3 for 160 MHz and 80+80 MHz.

For an HE ER SU PPDU:
Set to 0 for 242-tone RU.
Set to 1 for upper frequency 106-tone RU within the primary 20 MHz.
Values 2 and 3 are reserved.</td></tr>
</table>
It is anticipated that discovery will provide further details of the manner of infringement of the Accused Instrumentalities.
</td></tr>
</table>

[40] IEEE Std 802.11ax-2021, Sec. 27.3.11.7.2, Table 27-18.

Claim 7	Wi-Fi 6 Accused Instrumentalities
	In addition, the foregoing structures may be implemented in alternative configurations and usages that are equivalent to this claim element. In addition, the foregoing structures may be implemented in alternative configurations and usages that are equivalent to this claim element because they perform substantially the same function of transmitting the first packet type in a first channel bandwidth and transmitting the second packet type in a second channel bandwidth, wherein the first channel bandwidth is at least two times wider than the second channel bandwidth, in substantially the same way of transmitting the first packet type in a first channel bandwidth and transmitting the second packet type in a second channel bandwidth, wherein the first channel bandwidth is at least two times wider than the second channel bandwidth, to obtain the same result of providing additional diversity, reducing data loss and increasing decoding accuracy. For example, alternative equivalent configurations include the following, separately or in conjuncti on, which achieve the same functionalities provided by the claimed configurations: alternative con figurations of HE PHY and PPDUs, including HE SU PPDU, HE MU PPDU, HE ER SU PPDU an d HE TB PPDU; alternative configurations of the packet types or formats, headers fields, parts and bits, including HE-SIG-A, HE-SIG-A1, HE-SIG-A2, HE-SIG-A1-R, HE-SIG-A2-R, HE-SIG-B, H E-STF, HE-LTF, L-STF, L-LTF, L-SIG, RL-SIG and PE; alternative configurations of frequency a nd channel bands and bandwidth divisions, subdivisions, subchannels and subcarriers; alternative c onfigurations of the HE STA, pre-HE [de]modulated and HE [de]modulated fields, transmitter, rec eiver, encoder, decoder, modulator and demodulator, and alternative symbols and symbol configura tion, in transmitting, receiving, encoding, modulating or generating, including for alternative config urations for SU and/or MU.

Claim 8	Wi-Fi 6 Accused Instrumentalities
The media of claim 7, wherein the transmission of the same header bits in the second OFDM symbol provides diversity to increase a likelihood of correctly communicating header information of the second packet type.	The Accused Instrumentalities comprise wherein the transmission of the same header bits in the second OFDM symbol provides diversity to increase a likelihood of correctly communicating header information of the second packet type. For example, Wi-Fi 6 devices comprise wherein the transmission/reception of the same header bits in the second OFDM symbol provides diversity to increase a likelihood of correctly communicating header information of the second packet type. This is indicated below:[41] **Sept 2015** **doc.: IEEE 802.11-15/0826r2** **HE-SIGA transmission for range extension** **Date:** 2015-07-12

[41]September 2015 Working Group Comments, IEEE Std 802.11-15/0826r2.

Claim 8	Wi-Fi 6 Accused Instrumentalities
	Transmitter of HE-SIG-A • **We propose to use the time repetition and bypassing the bit interleaver of repeated HE-SIG-A symbols to enhance robustness of HE-SIG-A in outdoor scenarios.** 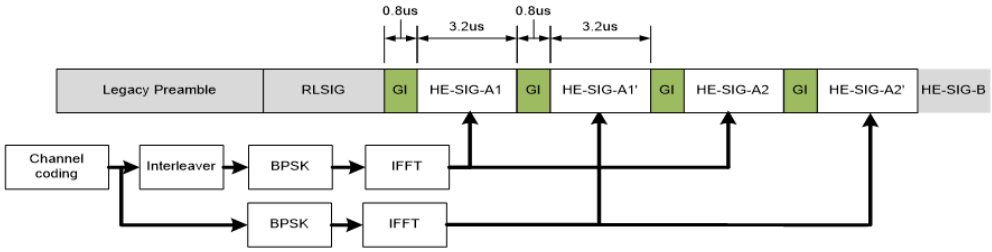 **Conclusion** • **Repeated HE-SIGA is needed in many use cases including range extension and outdoor channel operation.** • **An implementation friendly repetition method is proposed to harvest the frequency diversity gain.**

Claim 8	Wi-Fi 6 Accused Instrumentalities
	These working group comments were adopted by the IEEE 802.11ax standard and are implemented by the Accused Instrumentalities. This is indicated below:[42] Example transmitter block diagrams are shown in Figure 27-13 to Figure 27-22. The actual structure of the transmitter is implementation dependent. In particular, Figure 27-13 shows the transmit process for the L-SIG, RL-SIG, and HE-SIG-A fields of an HE PPDU using one frequency segment when the Beam Change subfield in the HE-SIG-A field is 1. These transmit blocks are also used to generate the L-STF and L-LTF fields of the HE PPDU when the Beam Change subfield in the HE-SIG-A field is 1, with the following exceptions: — The BCC encoder and interleaver and the constellation mapper are not used when generating the L-STF and L-LTF fields. — The BCC interleaver is not applied in the 2nd and the 4th OFDM symbols of the HE-SIG-A field in the HE ER SU PPDU.

[42] IEEE Std 802.11ax-2021, Sec. 27.3.5.

Claim 8	Wi-Fi 6 Accused Instrumentalities
	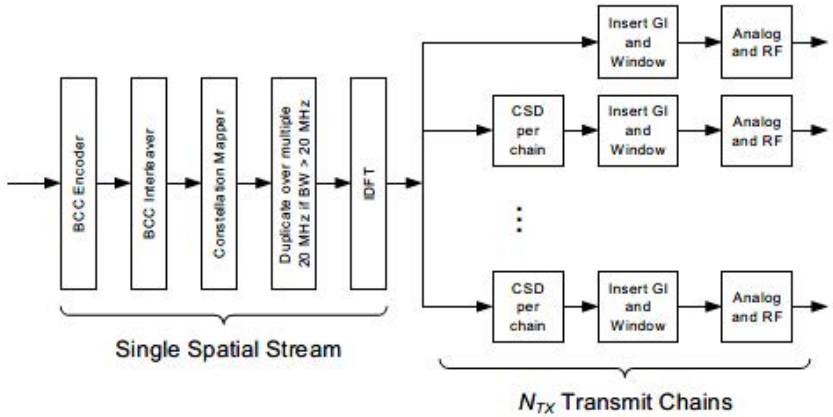 **Figure 27-13—Transmitter block diagram for L-SIG, RL-SIG, and HE-SIG-A fields for an HE SU PPDU and HE ER SU PPDU if Beam Change subfield is 1** It is anticipated that discovery will provide further details of the manner of infringement of the Accused Instrumentalities. In addition, the foregoing structures may be implemented in alternative configurations and usages that are equivalent to this claim element. In addition, the foregoing structures may be implemented in alternative configurations and usages that are equivalent to this claim element because they perform substantially the same function of transmission/reception of the same header bits in the second OFDM symbol provides diversity to increase a likelihood of correctly receiving header information of the second packet type, in substantially the same way of transmission/reception of the same header bits in the second OFDM symbol provides diversity to increase a likelihood of correctly receiving header information of the second packet type, to obtain the same result of providing additional diversity, reducing data loss and increasing decoding accuracy.

Claim 8	Wi-Fi 6 Accused Instrumentalities
	For example, alternative equivalent configurations include the following, separately or in conjunction, which achieve the same functionalities provided by the claimed configurations: alternative configurations of HE PHY and PPDUs, including HE SU PPDU, HE MU PPDU, HE ER SU PPDU and HE TB PPDU; alternative configurations of the packet types or formats, headers fields, parts and bits, including HE-SIG-A, HE-SIG-A1, HE-SIG-A2, HE-SIG-A1-R, HE-SIG-A2-R, HE-SIG-B, HE-STF, HE-LTF, L-STF, L-LTF, L-SIG, RL-SIG and PE; alternative configurations of frequency and channel bands and bandwidth divisions, subdivisions, subchannels and subcarriers; alternative configurations of the HE STA, pre-HE [de]modulated and HE [de]modulated fields, transmitter, receiver, encoder, decoder, modulator and demodulator, and alternative symbols and symbol configuration, in transmitting, receiving, encoding, modulating or generating, including for alternative configurations for SU and/or MU.

Claim 9	Wi-Fi 6 Accused Instrumentalities
The media of claim 7, wherein the transmission of the same header bits in the fourth OFDM symbol provides diversity to increase a likelihood of correctly communicating header information of the second packet type.	The Accused Instrumentalities comprise wherein the transmission of the same header bits in the fourth OFDM symbol provides diversity to increase a likelihood of correctly communicating header information of the second packet type. For example, Wi-Fi 6 devices comprise wherein the reception/transmission of the same header bits in the fourth OFDM symbol provides diversity to increase a likelihood of correctly communicating header information of the second packet type. This is indicated below:[43]

[43]September 2015 Working Group Comments, IEEE Std 802.11-15/0826r2.

Claim 9	Wi-Fi 6 Accused Instrumentalities
	Sept 2015 **doc.: IEEE 802.11-15/0826r2** **HE-SIGA transmission for range extension** **Date:** 2015-07-12 **Transmitter of HE-SIG-A** • **We propose to use the time repetition and bypassing the bit interleaver of repeated HE-SIG-A symbols to enhance robustness of HE-SIG-A in outdoor scenarios.** 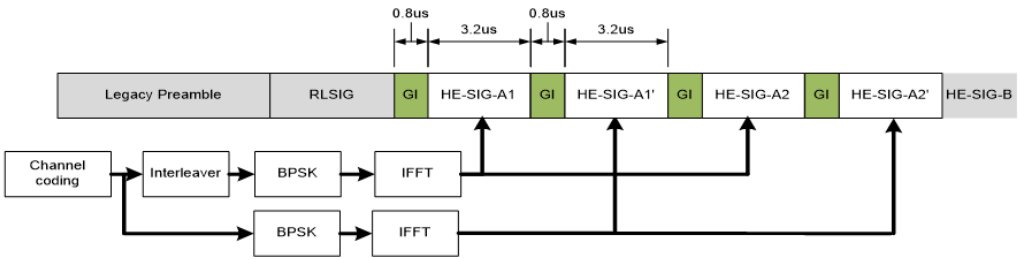

Claim 9	Wi-Fi 6 Accused Instrumentalities
	Conclusion • **Repeated HE-SIGA is needed in many use cases including range extension and outdoor channel operation.** • **An implementation friendly repetition method is proposed to harvest the frequency diversity gain.** These working group comments were adopted by the IEEE 802.11ax standard and are implemented by the Accused Instrumentalities. This is indicated below:[44] Example transmitter block diagrams are shown in Figure 27-13 to Figure 27-22. The actual structure of the transmitter is implementation dependent. In particular, Figure 27-13 shows the transmit process for the L-SIG, RL-SIG, and HE-SIG-A fields of an HE PPDU using one frequency segment when the Beam Change subfield in the HE-SIG-A field is 1. These transmit blocks are also used to generate the L-STF and L-LTF fields of the HE PPDU when the Beam Change subfield in the HE-SIG-A field is 1, with the following exceptions: — The BCC encoder and interleaver and the constellation mapper are not used when generating the L-STF and L-LTF fields. — The BCC interleaver is not applied in the 2nd and the 4th OFDM symbols of the HE-SIG-A field in the HE ER SU PPDU.

[44] IEEE Std 802.11ax-2021, Sec. 27.3.5.

Claim 9	Wi-Fi 6 Accused Instrumentalities
	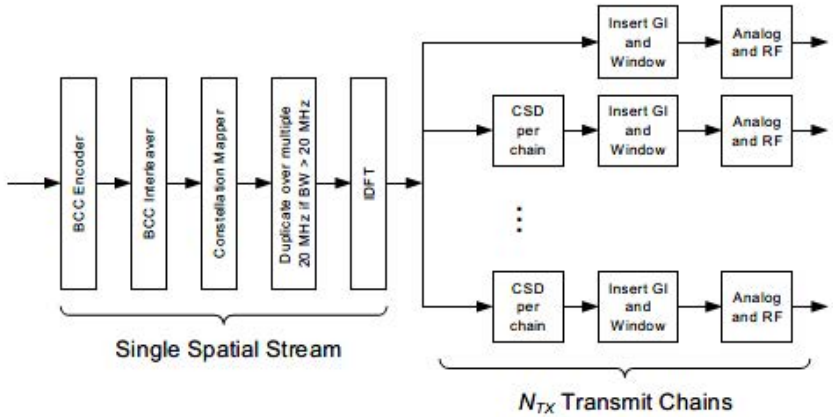 **Figure 27-13—Transmitter block diagram for L-SIG, RL-SIG, and HE-SIG-A fields for an HE SU PPDU and HE ER SU PPDU if Beam Change subfield is 1** It is anticipated that discovery will provide further details of the manner of infringement of the Accused Instrumentalities. In addition, the foregoing structures may be implemented in alternative configurations and usages that are equivalent to this claim element. In addition, the foregoing structures may be implemented in alternative configurations and usages that are equivalent to this claim element because they perform substantially the same function of transmission/reception of the same header bits in the fourth OFDM symbol provides diversity to increase a likelihood of correctly receiving header information of the second packet type, in substantially the same way of transmission/reception of the same header bits in the fourth OFDM symbol provides diversity to increase a likelihood of correctly receiving header information of the second packet type, to obtain the same result of providing additional diversity, reducing data loss and increasing decoding accuracy.

Claim 9	Wi-Fi 6 Accused Instrumentalities
	For example, alternative equivalent configurations include the following, separately or in conjunction, which achieve the same functionalities provided by the claimed configurations: alternative configurations of HE PHY and PPDUs, including HE SU PPDU, HE MU PPDU, HE ER SU PPDU and HE TB PPDU; alternative configurations of the packet types or formats, headers fields, parts and bits, including HE-SIG-A, HE-SIG-A1, HE-SIG-A2, HE-SIG-A1-R, HE-SIG-A2-R, HE-SIG-B, HE-STF, HE-LTF, L-STF, L-LTF, L-SIG, RL-SIG and PE; alternative configurations of frequency and channel bands and bandwidth divisions, subdivisions, subchannels and subcarriers; alternative configurations of the HE STA, pre-HE [de]modulated and HE [de]modulated fields, transmitter, receiver, encoder, decoder, modulator and demodulator, and alternative symbols and symbol configuration, in transmitting, receiving, encoding, modulating or generating, including for alternative configurations for SU and/or MU.

Claim 11	Wi-Fi 6 Accused Instrumentalities
A non-transitory computer-readable information storage media, having stored thereon instructions, that when executed by one or more processors in a transceiver, cause to be performed a method comprising:	The Accused Instrumentalities comprise a non-transitory computer-readable information storage media, having stored thereon instructions, that when executed by one or more processors in a transceiver, cause to be performed a method, that comprises the following technical elements and limitations, as described in the Wi-Fi 6 standard. See claim 1 (preamble).
receiving, by a wireless Orthogonal Frequency Division Multiplexing (OFDM) communications receiving, a first packet type comprising a first header field, wherein the first header field comprises two parts, a first part comprising a first set of header bits of the first header field and a second part comprising a second set of header bits of the first header field, wherein the first set of header bits of the first header field is different than the second set of header bits of the first header field;	The Accused Instrumentalities comprise receiving, by a wireless Orthogonal Frequency Division Multiplexing (OFDM) communications receiver, a first packet type comprising a first header field, wherein the first header field comprises two parts, a first part comprising a first set of header bits of the first header field and a second part comprising a second set of header bits of the first header field, wherein the first set of header bits of the first header field is different than the second set of header bits of the first header field. For example, Wi-Fi 6 devices comprise receiving, by a wireless Orthogonal Frequency Division Multiplexing (OFDM) communications receiver, a first packet type comprising a first header field, wherein the first header field comprises two parts, a first part comprising a first set of header bits of the first header field and a second part comprising a second set of header bits of the first header field, wherein the first set of header bits of the first header field is different than the second set of header bits of the first header field. For example, Wi-Fi 6 devices comprise receiving, by a wireless OFDM communications receiver, physical layer protocol data units (PPDUs). This is indicated below:[45]

[45] IEEE Std 802.11ax-2021, Sec. 27.1.1.

Claim 11	Wi-Fi 6 Accused Instrumentalities
	27. High-efficiency (HE) PHY specification **27.1 Introduction** **27.1.1 Introduction to the HE PHY** Clause 27 specifies the PHY entity for a high-efficiency (HE) orthogonal frequency division multiplexing (OFDM) system. In addition to the requirements in Clause 27, an HE STA shall be capable of transmitting and receiving PPDUs that are compliant with the mandatory requirements of the following PHY specifications: — Clause 19 and Clause 21 if the HE STA supports an operating channel width greater than or equal to 80 MHz and is operating in the 5 GHz band. — Clause 19 and Clause 21 transmission and reception on 20 MHz channel width (see 26.17.1) if the HE STA is a 20 MHz-only non-AP HE STA and is operating in the 5 GHz band. — Clause 19 if the HE STA is operating in the 2.4 GHz band. — Clause 17 if the HE STA is operating in the 6 GHz band. PPDUs include a first packet type comprising a first header field. For example, Wi-Fi 6 devices comprise receiving, by a wireless OFDM communications receiver, the high-efficiency single user physical layer protocol data unit (HE SU PPDU) format, among other PPDU formats:[46] The HE PHY provides support for midambles. Midambles facilitate updating of the channel estimate during HE PPDU reception and might be of use in high mobility scenarios that often result in significant variations of the wireless channel over the duration of a PPDU. An HE STA shall support the following features: — Transmission and reception of an HE SU PPDU that consists of a single RU spanning the entire PPDU bandwidth.

[46] IEEE Std 802.11ax-2021, Sec. 27.1.1.

Claim 11	Wi-Fi 6 Accused Instrumentalities
	See also:[47] **high-efficiency (HE) single-user (SU) physical layer (PHY) protocol data unit (PPDU) (HE SU PPDU):** A PPDU transmitted with HE SU PPDU format. This PPDU carries a single PHY service data unit (PSDU). The HE SU PPDU is a first packet type comprising a first header field. For example, the HE SU PPDU comprises the HE-SIG-A field. This is indicated below:[48] **27.3.4 HE PPDU formats** Four HE PPDU formats are defined: HE SU PPDU, HE MU PPDU, HE ER SU PPDU, and HE TB PPDU. The HE sounding NDP is a variant of the HE SU PPDU and defined in 27.3.17. The HE TB feedback NDP is a variant of the HE TB PPDU and defined in 27.3.18. NOTE—The HE ER SU PPDU is not a variant of the HE SU PPDU. Requirements related to HE SU PPDUs and HE ER SU PPDUs are specified separately. The format of the HE SU PPDU is defined as in Figure 27-8. This PPDU format is used for SU transmission, and in this format, the HE-SIG-A field is not repeated. 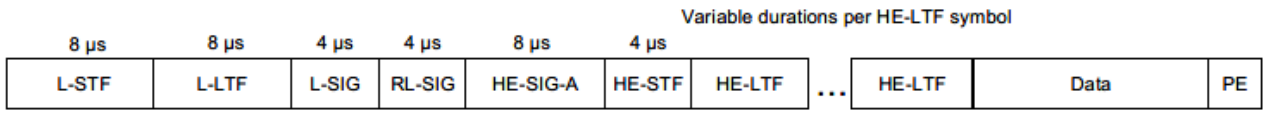 **Figure 27-8—HE SU PPDU format**

[47] IEEE Std 802.11ax-2021, Sec. 3.2.

[48] IEEE Std 802.11ax-2021, Sec. 27.3.4.

Claim 11	Wi-Fi 6 Accused Instrumentalities
	See also:[49] The fields of the HE PPDU formats are summarized in Table 27-11. **Table 27-11—HE PPDU fields** **Field** / **Description** L-STF / Non-HT Short Training field L-LTF / Non-HT Long Training field L-SIG / Non-HT SIGNAL field RL-SIG / Repeated Non-HT SIGNAL field HE-SIG-A / HE SIGNAL A field HE-SIG-B / HE SIGNAL B field HE-STF / HE Short Training field HE-LTF / HE Long Training field Data / The Data field carrying the PSDU(s) PE / Packet extension field The RL-SIG, HE-SIG-A, HE-STF, HE-LTF, and PE fields are present in all HE PPDU formats. The HE-SIG-B field is present only in the HE MU PPDU. The PE field is defined in 27.3.13. The L-STF, L-LTF, L-SIG, RL-SIG, HE-SIG-A, and HE-SIG-B fields are referred to as *pre-HE modulated fields*, while the HE-STF, HE-LTF, Data, and PE fields are referred to as *HE modulated fields*.

[49] IEEE Std 802.11ax-2021, Sec. 27.3.4.

Claim 11	Wi-Fi 6 Accused Instrumentalities
	The first header field comprises two parts. For example, the HE-SIG-A field comprises two subfields, HE-SIG-A1 and HE-SIG-A2. This is indicated below:[50] **27.3.6.6 Construction of HE-SIG-A field** a) For an HE SU PPDU, HE MU PPDU, and HE TB PPDU, the HE-SIG-A field consists of two subfields, HE-SIG-A1 and HE-SIG-A2 as defined in 27.3.11.7, and is constructed as follows: 1) Obtain the HE-SIG-A field values from the TXVECTOR. Add the reserved bits, append the calculated CRC, and then append the N_{tail} tail bits as shown in 27.3.11.7. This results in 52 uncoded bits. 2) BCC encoder: Encode the data by a convolutional encoder at the rate $R = 1/2$ as described in 17.3.5.6. 3) BCC interleaver: Interleave as described in 27.3.12.8. 4) Constellation mapper: BPSK modulate the first 52 interleaved bits as described in 17.3.5.8 to form the first OFDM symbol of the HE-SIG-A field. BPSK modulate the second 52 interleaved bits to form the second OFDM symbol of the HE-SIG-A field. 5) Pilot insertion: Insert pilots as described in 17.3.5.9. 6) Duplicate and phase rotation: Duplicate the HE-SIG-A OFDM symbols over each occupied 20 MHz subchannel of the channel width. Apply the appropriate phase rotation for each occupied 20 MHz subchannel as described in 27.3.10 and 21.3.7.5. 7) CSD per STS: If the TXVECTOR parameter BEAM_CHANGE is 0, apply CSD per STS for each space-time stream and frequency segment as described in 27.3.11.2.2 before spatial mapping. 8) Spatial mapping: If the TXVECTOR parameter BEAM_CHANGE is 0, apply the A matrix and the Q matrix as described in 27.3.11.7.4. 9) IDFT: Compute the inverse discrete Fourier transform. 10) CSD per chain: If the TXVECTOR parameter BEAM_CHANGE is 1 or not present, apply CSD per chain for each transmit chain and frequency segment as described in 27.3.11.2.1. 11) GI and windowing: Prepend a GI ($T_{GI,\text{Pre-HE}}$), and apply windowing as described in 27.3.10. 12) Analog and RF: Upconvert the resulting complex baseband waveform associated with each transmit chain to an RF signal according to the center frequency of the desired channel and transmit. Refer to 27.3.10 and 27.3.11 for details.

[50] IEEE Std 802.11ax-2021, Sec. 27.3.6.6.

Claim 11	Wi-Fi 6 Accused Instrumentalities
	A first part comprises a first set of header bits of the first header field. For example, the HE-SIG-A1 subfield comprises a first set of header bits of HE-SIG-A. This is indicated below:[51]

27.3.11.7.2 Content

The HE-SIG-A field for an HE SU PPDU or an HE ER SU PPDU contains the fields listed in Table 27-18.

Table 27-18—HE-SIG-A field of an HE SU PPDU and HE ER SU PPDU

Bit	Field	Number of bits	Description
HE-SIG-A1 subfield of HE-SIG-A field			
B0	Format	1	Differentiate an HE SU PPDU and HE ER SU PPDU from an HE TB PPDU: Set to 1 for an HE SU PPDU and HE ER SU PPDU.
B1	Beam Change	1	Set to 1 to indicate that the pre-HE modulated fields of the PPDU may be spatially mapped differently from the first symbol of the HE-LTF. Equation (27-6), Equation (27-9), Equation (27-12), Equation (27-14), Equation (27-16), and Equation (27-18) apply if the Beam Change field is 1. Set to 0 to indicate that the pre-HE modulated fields of the PPDU are spatially mapped the same way as the first symbol of the HE-LTF on each subcarrier. Equation (27-8), Equation (27-10), Equation (27-13), Equation (27-15), Equation (27-17), and Equation (27-19) apply if the Beam Change field is 0.
B2	UL/DL	1	Indicates whether the PPDU is sent UL or DL. Set to 1 if the PPDU is addressed to an AP. Set to 0 otherwise. See TXVECTOR parameter UPLINK_FLAG.

[51] IEEE Std 802.11ax-2021, Sec. 27.3.11.7.2.

Claim 11	Wi-Fi 6 Accused Instrumentalities
	(cont.)

B3–B6	HE-MCS	4	For an HE SU PPDU: Set to *n* for HE-MCS *n*, where *n* = 0, 1, 2, …, 11. Values 12–15 are reserved. For an HE ER SU PPDU with Bandwidth field set to 0 (242-tone RU): Set to *n* for HE-MCS *n*, where *n* = 0, 1, 2. Values 3–15 are reserved. For an HE ER SU PPDU with Bandwidth field set to 1 (upper frequency 106-tone RU): Set to 0 for HE-MCS 0. Values 1–15 are reserved.
B7	DCM	1	Indicates whether DCM is applied to the Data field for the HE-MCS indicated. See Table 27-19 for the interpretation of this field. NOTE—DCM is applicable to only HE-MCSs 0, 1, 3, and 4. DCM is applicable to only 1 and 2 spatial streams.
B8–B13	BSS Color	6	An identifier of the BSS. See TXVECTOR parameter BSS_COLOR.

Claim 11	Wi-Fi 6 Accused Instrumentalities
	(cont.)

Table 27-18—HE-SIG-A field of an HE SU PPDU and HE ER SU PPDU *(continued)*

Bit	Field	Number of bits	Description
B14	Reserved	1	Reserved and set to 1.
B15–B18	Spatial Reuse	4	Indicates whether spatial reuse modes are allowed during the transmission of this PPDU: Set to a value from Table 27-22 (see 26.11.6 and 26.10).
B19–B20	Bandwidth	2	For an HE SU PPDU: Set to 0 for 20 MHz. Set to 1 for 40 MHz. Set to 2 for 80 MHz. Set to 3 for 160 MHz and 80+80 MHz. For an HE ER SU PPDU: Set to 0 for 242-tone RU. Set to 1 for upper frequency 106-tone RU within the primary 20 MHz. Values 2 and 3 are reserved.
B21–B22	GI+HE-LTF Size	2	Indicates the GI duration and HE-LTF size. See Table 27-19 for the interpretation of this field.
B23–B25	NSTS And Midamble Periodicity	3	If the Doppler field is 0, indicates the number of space-time streams. Set to the number of space-time streams minus 1. For an HE ER SU PPDU, values 2–7 are reserved. If the Doppler field is 1, then B23-B24 indicates the number of space time streams, up to 4, and B25 indicates the midamble periodicity. B23-B24 is set to the number of space time streams minus 1. For an HE ER SU PPDU, values 2 and 3 are reserved. B25 is set to 0 for 10 symbol midamble periodicity, to 1 for 20 symbol midamble periodicity. See TXVECTOR parameter MIDAMBLE_PERIODICITY.

Claim 11	Wi-Fi 6 Accused Instrumentalities
	A second part comprises a second set of header bits of the first header field. For example, the HE-SIG-A2 subfield comprises a second set of header bits of HE-SIG-A. This is indicated below:[52]

Bit	Field	Number of bits	Description
HE-SIG-A2 subfield of HE-SIG-A field			
B0–B6	TXOP	7	Set to 127 to indicate no duration information. Set to a value less than 127 to indicate the closest minimum bound on the duration information for NAV setting and protection of the TXOP as follows: If B0 is 0, the TXOP duration indicated is B1-B6, in units of 8 µs. If B0 is 1, the TXOP duration indicated is B1-B6, in units of 128 µs, plus 512 µs. See TXVECTOR parameter TXOP_DURATION.
B7	Coding	1	Indicates whether BCC or LDPC is used: Set to 0 to indicate BCC Set to 1 to indicate LDPC
B8	LDPC Extra Symbol Segment	1	Indicates the presence of the LDPC extra symbol segment: Set to 1 if an LDPC extra symbol segment is present. Set to 0 if an LDPC extra symbol segment is not present. Reserved and set to 1 if the Coding field is 0.
B9	STBC	1	Indicates whether STBC is applied to the Data field. See Table 27-19 for the interpretation of this field.

[52] IEEE Std 802.11ax-2021, Sec. 27.3.11.7.2.

Claim 11	Wi-Fi 6 Accused Instrumentalities
	(cont.) **Table 27-18—HE-SIG-A field of an HE SU PPDU and HE ER SU PPDU *(continued)*** **Bit** / **Field** / **Number of bits** / **Description** B10 / Beamformed / 1 / Set to 1 if a beamforming steering matrix is applied to the HE modulated fields. Set to 0 otherwise. B11–B12 / Pre-FEC Padding Factor / 2 / Indicates the pre-FEC padding factor: Set to 0 to indicate a pre-FEC padding factor of 4. Set to 1 to indicate a pre-FEC padding factor of 1. Set to 2 to indicate a pre-FEC padding factor of 2. Set to 3 to indicate a pre-FEC padding factor of 3. B13 / PE Disambiguity / 1 / Indicates PE disambiguity as defined in 27.3.13. B14 / Reserved / 1 / Reserved and set to 1. B15 / Doppler / 1 / Set to 1 if one of the following applies: — The number of OFDM symbols in the Data field is larger than the signaled midamble periodicity plus 1 and the midamble is present. — The number of OFDM symbols in the Data field is less than or equal to the signaled midamble periodicity plus 1 (see 27.3.12.16, the midamble is not present, but the channel is fast varying. It recommends that midamble may be used for the PPDUs of the reverse link. Set to 0 otherwise. B16–B19 / CRC / 4 / CRC for bits 0–41 of the HE-SIG-A field (see 27.3.11.7.3). Bits 0–41 of the HE-SIG-A field correspond to bits 0–25 of the HE-SIG-A1 subfield followed by bits 0–15 of the HE-SIG-A2 subfield. B20–B25 / Tail / 6 / Used to terminate the trellis of the convolutional decoder. Set to 0. As shown above, the first set of header bits of the first header field (HE-SIG-A1) is different than the second set of header bits of the first header field (HE-SIG-A2).

Claim 11	Wi-Fi 6 Accused Instrumentalities
	It is anticipated that discovery will provide further details of the manner of infringement of the Accused Instrumentalities. In addition, the foregoing structures may be implemented in alternative configurations and usages that are equivalent to this claim element. In addition, the foregoing structures may be implemented in alternative configurations and usages that are equivalent to this claim element because they perform substantially the same function of receiving, a first packet type comprising a first header field, wherein the first header field comprises two parts, a first part comprising a first set of header bits of the first header field and a second part comprising a second set of header bits of the first header field, wherein the first set of header bits of the first header field is different than the second set of header bits of the first header field, in substantially the same way of receiving, a first packet type comprising a first header field, wherein the first header field comprises two parts, a first part comprising a first set of header bits of the first header field and a second part comprising a second set of header bits of the first header field, wherein the first set of header bits of the first header field is different than the second set of header bits of the first header field, to obtain the same result of providing additional diversity, reducing data loss and increasing decoding accuracy. For example, alternative equivalent configurations include the following, separately or in conjunction, which achieve the same functionalities provided by the claimed configurations: alternative configurations of HE PHY and PPDUs, including HE SU PPDU, HE MU PPDU, HE ER SU PPDU and HE TB PPDU; alternative configurations of the packet types or formats, headers fields, parts and bits, including HE-SIG-A, HE-SIG-A1, HE-SIG-A2, HE-SIG-A1-R, HE-SIG-A2-R, HE-SIG-B, HE-STF, HE-LTF, L-STF, L-LTF, L-SIG, RL-SIG and PE; alternative configurations of frequency and channel bands and bandwidth divisions, subdivisions, subchannels and subcarriers; alternative configurations of the HE STA, pre-HE [de]modulated and HE [de]modulated fields, transmitter, receiver, encoder, decoder, modulator and demodulator, and alternative symbols and symbol configuration, in transmitting, receiving, encoding, modulating or generating, including for alternative configurations for SU and/or MU.
demodulating, by a modulator, a first OFDM	The Accused Instrumentalities comprise demodulating, by a demodulator, a first OFDM symbol followed by a second OFDM symbol, wherein the first OFDM symbol is used to receive the first

Claim 11	Wi-Fi 6 Accused Instrumentalities
symbol followed by a second OFDM symbol, wherein the first OFDM symbol is used to recieve the first part of the first header field and the second OFDM symbol is used to receive the second part of the first header field;	part of the first header field and the second OFDM symbol is used to receive the second part of the first header field. For example, Wi-Fi 6 devices comprise demodulating, by a demodulator, a first OFDM symbol followed by a second OFDM symbol, wherein the first OFDM symbol is used to receive the first part of the first header field and the second OFDM symbol is used to receive the second part of the first header field. This is indicated below:[53] **27.3.6.6 Construction of HE-SIG-A field** a) For an HE SU PPDU, HE MU PPDU, and HE TB PPDU, the HE-SIG-A field consists of two subfields, HE-SIG-A1 and HE-SIG-A2 as defined in 27.3.11.7, and is constructed as follows: 1) Obtain the HE-SIG-A field values from the TXVECTOR. Add the reserved bits, append the calculated CRC, and then append the N_{tail} tail bits as shown in 27.3.11.7. This results in 52 uncoded bits. 2) BCC encoder: Encode the data by a convolutional encoder at the rate $R = 1/2$ as described in 17.3.5.6. 3) BCC interleaver: Interleave as described in 27.3.12.8. 4) Constellation mapper: BPSK modulate the first 52 interleaved bits as described in 17.3.5.8 to form the first OFDM symbol of the HE-SIG-A field. BPSK modulate the second 52 interleaved bits to form the second OFDM symbol of the HE-SIG-A field. (cont.)

[53] IEEE Std 802.11ax-2021, Sec. 27.3.6.6.

Claim 11	Wi-Fi 6 Accused Instrumentalities
	5) Pilot insertion: Insert pilots as described in 17.3.5.9. 6) Duplicate and phase rotation: Duplicate the HE-SIG-A OFDM symbols over each occupied 20 MHz subchannel of the channel width. Apply the appropriate phase rotation for each occupied 20 MHz subchannel as described in 27.3.10 and 21.3.7.5. 7) CSD per STS: If the TXVECTOR parameter BEAM_CHANGE is 0, apply CSD per STS for each space-time stream and frequency segment as described in 27.3.11.2.2 before spatial mapping. 8) Spatial mapping: If the TXVECTOR parameter BEAM_CHANGE is 0, apply the A matrix and the Q matrix as described in 27.3.11.7.4. 9) IDFT: Compute the inverse discrete Fourier transform. 10) CSD per chain: If the TXVECTOR parameter BEAM_CHANGE is 1 or not present, apply CSD per chain for each transmit chain and frequency segment as described in 27.3.11.2.1. 11) GI and windowing: Prepend a GI ($T_{GI,\text{Pre-HE}}$), and apply windowing as described in 27.3.10. 12) Analog and RF: Upconvert the resulting complex baseband waveform associated with each transmit chain to an RF signal according to the center frequency of the desired channel and transmit. Refer to 27.3.10 and 27.3.11 for details.

Claim 11	Wi-Fi 6 Accused Instrumentalities
	See also:[54] **27.3.11.7.4 Encoding and modulation** For an HE SU PPDU, HE MU PPDU, and HE TB PPDU, the HE-SIG-A field is composed of two subfields, HE-SIG-A1 and HE-SIG-A2, each containing 26 data bits. The HE-SIG-A1 subfield is transmitted before the HE-SIG-A2 subfield. The data bits of the HE-SIG-A OFDM symbols shall be BCC encoded at rate $R = 1/2$, be interleaved, be mapped to a BPSK constellation, and have pilots inserted following the steps described in 17.3.5.6, 27.3.12.8, 17.3.5.8, and 17.3.5.9, respectively. The constellation mappings of the HE-SIG-A field in an HE SU PPDU, HE MU PPDU, and HE TB PPDU are shown in Figure 27-25. The first half and second half of the stream of 104 complex numbers generated by these steps (before pilot insertion) are divided into two groups of 52 complex numbers, where the first 52 complex numbers form the first OFDM symbol of the HE-SIG-A field and the second 52 complex numbers form the second OFDM symbol of the HE-SIG-A field, respectively. If the TXVECTOR parameter BEAM_CHANGE is 1 or not present, the time domain waveform for the HE-SIG-A field of an HE SU PPDU, HE MU PPDU, and HE TB PPDU, transmitted on frequency segment i_{Seg} and transmit chain i_{TX}, shall be as specified in Equation (27-16). $$r_{\text{HE-SIG-A}}^{(i_{Seg} i_{TX})}(t) = \frac{1}{\sqrt{N_{TX} \cdot N_{\text{HE-SIG-A}}^{\text{Tone}} \cdot \frac{\lvert\Omega_{20\text{MHz}}\rvert}{N_{20\text{MHz}}}}} \sum_{n=0}^{1} w_{T_{SYML}}(t - nT_{SYML}) \sum_{i_{BW} \in \Omega_{20\text{MHz}}} \sum_{k=-28}^{28} \eta_{\text{HE-SIG-A},k} \left(\begin{array}{l} \Upsilon_{(k - K_{\text{Shift}}(i_{BW})),\,\text{BW}}(D_{k,n,20} + p_{n+2} P_k) \\ \cdot \exp(j2\pi(k - K_{\text{Shift}}(i_{\text{BW}}))\Delta_{F,\,\text{Pre-HE}}(t - nT_{SYML} - T_{GI,\,\text{Pre-HE}} - T_{CS}^{i_{TX}})) \end{array} \right) \quad (27\text{-}16)$$

[54] IEEE Std 802.11ax-2021, Sec. 27.3.11.7.4.

Claim 11	Wi-Fi 6 Accused Instrumentalities
	(cont.) where T_{SYML} is given in Table 27-12 $K_{\text{Shift}}(i) = (N_{20\text{MHz}} - 1 - 2i) \cdot 32$ $D_{k,n,20} = \begin{cases} 0, k = 0, \pm 7, \pm 21 \\ d_{M^r_{20}(k),n}, \text{ otherwise} \end{cases}$ $M^r_{20}(k) = \begin{cases} k+28, -28 \le k \le -22 \\ k+27, -20 \le k \le -8 \\ k+26, -6 \le k \le -1 \\ k+25, 1 \le k \le 6 \\ k+24, 8 \le k \le 20 \\ k+23, 22 \le k \le 28 \end{cases}$ $\eta_{\text{HE-SIG-A},k} = \begin{cases} \left[\frac{1}{\sqrt{2}}, 1\right], \text{ for an HE TB PPDU} \\ 1, \text{ otherwise} \end{cases}$ P_k and p_n are defined in 17.3.5.10 $N^{\text{Tone}}_{\text{HE-SIG-A}}$ is defined in Table 27-16 $T^{i_{TX}}_{CS}$ represents the cyclic shift for transmit chain i_{TX} with a value given in 27.3.11.2.1

Claim 11	Wi-Fi 6 Accused Instrumentalities
	(cont.) If the TXVECTOR parameter BEAM_CHANGE is 0, the time domain waveform of the HE-SIG-A field shall be as given by Equation (27-17). $$r_{\text{HE-SIG-A}}^{(i_{Seg}, i_{TX})}(t) = \frac{1}{\sqrt{N_{STS} \cdot N_{\text{HE-SIG-A}}^{\text{Tone}} \cdot \frac{\lvert\Omega_{20\text{MHz}}\rvert}{N_{20\text{MHz}}}}} \sum_{n=0}^{1} w_{T_{SYML}}(t - nT_{SYML}) \quad (27\text{-}17)$$ $$\sum_{i_{BW}=0}^{N_{20\text{MHz}}-1} \sum_{k=-28}^{28} \sum_{m=1}^{N_{STS}} \left(\left[Q_{4(k-K_{\text{Shift}}(i_{BW}))}^{(i_{Seg})} \right]_{i_{TX}, m} \left[A_{\text{HE-LTF}}^{4(k-K_{\text{Shift}}(i_{BW}))} \right]_{m,1} (D_{k,n,20} + p_{n+2}P_k) \cdot \exp(j2\pi(k - K_{\text{Shift}}(i_{\text{BW}}))\Delta_{F,\text{Pre-HE}}(t - nT_{SYML} - T_{\text{GI, Pre-HE}} - T_{CS,HE}(m))) \right)$$ where $T_{CS,\text{HE}}(m)$ represents the cyclic shift for space-time stream m as defined in 27.3.11.2.2 $Q_k^{(i_{Seg})}$ is defined in 27.3.10 $A_{\text{HE-LTF}}^k$ is defined in Equation (27-55)

Claim 11	Wi-Fi 6 Accused Instrumentalities
	See also:[55] 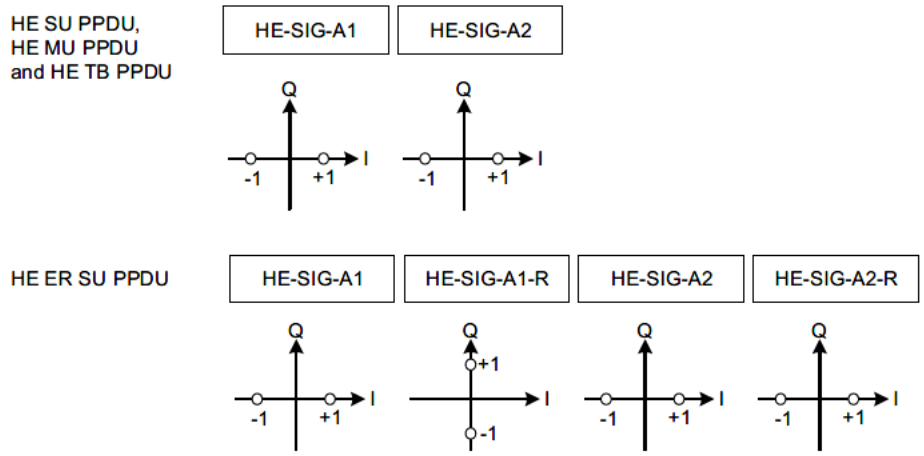 **Figure 27-25—Data subcarrier constellation of HE-SIG-A symbols** It is anticipated that discovery will provide further details of the manner of infringement of the Accused Instrumentalities. In addition, the foregoing structures may be implemented in alternative configurations and usages that are equivalent to this claim element. In addition, the foregoing structures may be implemented in alternative configurations and usages that are equivalent to this claim element because they perform substantially the same function of demodulating a first OFDM symbol followed by a second OFDM symbol, wherein the first OFDM symbol is used to receive the first part of the first header field and the second OFDM symbol is used to receive the second part of the first header field, in substantially the same way of demodulating a first OFDM symbol followed by a second OFDM symbol, wherein the first OFDM

[55] IEEE Std 802.11ax-2021, Sec. 27.3.11.7.4.

Claim 11	Wi-Fi 6 Accused Instrumentalities
	symbol is used to receive the first part of the first header field and the second OFDM symbol is used to receive the second part of the first header field, to obtain the same result of providing additional diversity, reducing data loss and increasing decoding accuracy. For example, alternative equivalent configurations include the following, separately or in conjunction, which achieve the same functionalities provided by the claimed configurations: alternative configurations of HE PHY and PPDUs, including HE SU PPDU, HE MU PPDU, HE ER SU PPDU and HE TB PPDU; alternative configurations of the packet types or formats, headers fields, parts and bits, including HE-SIG-A, HE-SIG-A1, HE-SIG-A2, HE-SIG-A1-R, HE-SIG-A2-R, HE-SIG-B, HE-STF, HE-LTF, L-STF, L-LTF, L-SIG, RL-SIG and PE; alternative configurations of frequency and channel bands and bandwidth divisions, subdivisions, subchannels and subcarriers; alternative configurations of the HE STA, pre-HE [de]modulated and HE [de]modulated fields, transmitter, receiver, encoder, decoder, modulator and demodulator, and alternative symbols and symbol configuration, in transmitting, receiving, encoding, modulating or generating, including for alternative configurations for SU and/or MU.
receiving, by the wireless OFDM communications receiver over the wireless communications channel, a second packet type comprising a second header field, wherein the second header field comprises four parts, a first part comprising a first set of header bits of the second header field, a second part comprising a second set of header bits of the second header field, a third part comprising a third set of header bits of the second	The Accused Instrumentalities comprise receiving, by the wireless OFDM communications receiver over the wireless communications channel, a second packet type comprising a second header field, wherein the second header field comprises four parts, a first part comprising a first set of header bits of the second header field, a second part comprising a second set of header bits of the second header field, a third part comprising a third set of header bits of the second header field and a fourth part comprising a fourth set of header bits of the second header field. For example, Wi-Fi 6 devices comprise receiving, by the wireless OFDM communications receiver over the wireless communications channel, a second packet type comprising a second header field, wherein the second header field comprises four parts, a first part comprising a first set of header bits of the second header field, a second part comprising a second set of header bits of the second header field, a third part comprising a third set of header bits of the second header field and a fourth part comprising a fourth set of header bits of the second header field. Wi-Fi 6 devices comprise receiving, by the wireless OFDM communications receiver, a second packet type comprising a second header field. For example, Wi-Fi 6 devices receive, by the

Claim 11	Wi-Fi 6 Accused Instrumentalities
header field and a fourth part comprising a fourth set of header bits of the second header field,	wireless OFDM communications receiver, the high-efficiency extended range single-user PPDU (HE ER SU PPDU) (second packet type), in addition to the HE SU PPDU (first packet type):[56] An HE STA shall support the following features: — Transmission and reception of an HE SU PPDU that consists of a single RU spanning the entire PPDU bandwidth. — Transmission and reception of an HE ER SU PPDU that consists of a 242-tone RU spanning the entire primary 20 MHz PPDU bandwidth. See also:[57] **high-efficiency (HE) extended range (ER) single-user (SU) physical layer (PHY) protocol data unit (PPDU) (HE ER SU PPDU):** A PPDU transmitted with HE ER SU PPDU format. This PPDU carries a single PHY service data unit (PSDU). The second packet type comprises a second header field. For example, the HE ER SU PPDU comprises an HE-SIG-A field:[58]

[56] IEEE Std 802.11ax-2021, Sec. 27.1.1.

[57] IEEE Std 802.11ax-2021, Sec. 3.2.

[58] IEEE Std 802.11ax-2021, Sec. 27.3.4.

Claim 11	Wi-Fi 6 Accused Instrumentalities
	The format of the HE ER SU PPDU is defined as in Figure 27-10. This format is used for SU transmission, and in this format, the HE-SIG-A field is twice as long as the HE-SIG-A field in other HE PPDU formats. 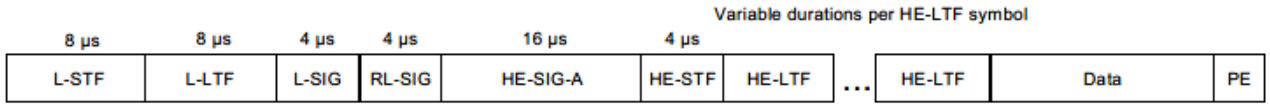 **Figure 27-10—HE ER SU PPDU format** The second header field comprises four parts, a first part comprising a first set of header bits of the second header field, a second part comprising a second set of header bits of the second header field, a third part comprising a third set of header bits of the second header field and a fourth part comprising a fourth set of header bits of the second header field. For example, the HE-SIG-A field in the HE ER SU PPDU comprises four subfields, HE-SIG-A1, HE-SIG-A1-R, HE-SIG-A2, and HE-SIG-A2-R:[59]

[59] IEEE Std 802.11ax-2021, Sec. 27.3.6.6.

Claim 11	Wi-Fi 6 Accused Instrumentalities
	b) For an HE ER SU PPDU, the HE-SIG-A field consists of four subfields: HE-SIG-A1, HE-SIG-A1-R, HE-SIG-A2, and HE-SIG-A2-R. The HE-SIG-A1 and HE-SIG-A1-R subfields have the same data bits while the HE-SIG-A2 and HE-SIG-A2-R subfields have the same data bits as defined in 27.3.11.7. The HE-SIG-A field is constructed as follows: 1) Obtain the HE-SIG-A fields from the TXVECTOR. Add the reserved bits, append the calculated CRC, and then append the N_{tail} tail bits as shown in 27.3.11.7. This results in 52 uncoded bits. 2) BCC encoder: Encode the data by a convolutional encoder at the rate $R = 1/2$ as described in 17.3.5.6. 3) BCC interleaver: Interleave the data bits of the HE-SIG-A1 and HE-SIG-A2 subfields as described in 27.3.12.8. The data bits of the HE-SIG-A1-R and HE-SIG-A2-R subfields are not interleaved. 4) Constellation mapper: BPSK modulate the HE-SIG-A1, HE-SIG-A2, and HE-SIG-A2-R data bits as described in 17.3.5.8 to form the first, third, and fourth OFDM symbol of the HE-SIG-A field, respectively. QBPSK modulate the HE-SIG-A1-R encoded data bits to form the second OFDM symbol of the HE-SIG-A field. 5) Pilot insertion: Insert pilots as described in 17.3.5.9. 6) Duplication and phase rotation: Duplicate the HE-SIG-A field over each occupied 20 MHz subchannel of the channel bandwidth. Apply appropriate phase rotation for each occupied 20 MHz subchannel as described in 27.3.10 and 21.3.7.5. 7) CSD per STS: If the TXVECTOR parameter BEAM_CHANGE is 0, apply CSD per STS for each space-time stream and frequency segment as described in 27.3.11.2.2 before spatial mapping. 8) Spatial mapping: If the TXVECTOR parameter BEAM_CHANGE is 0, apply the A matrix and the Q matrix as described in 27.3.11.7.4. 9) IDFT: Compute the inverse Fourier transform. 10) CSD per chain: If the TXVECTOR parameter BEAM_CHANGE is 1 or not present, apply CSD per chain for each transmit chain and frequency segment as described in 27.3.11.2.1. 11) GI and windowing: Prepend a GI ($T_{GI,\text{Pre-HE}}$), and apply windowing as described in 27.3.10. 12) Analog and RF: Upconvert the resulting complex baseband waveform associated with each transmit chain to an RF signal according to the center frequency of the desired channel and transmit. Refer to 27.3.10 and 27.3.11 for details.

Claim 11	Wi-Fi 6 Accused Instrumentalities
	HE-SIG-A1 comprising a first set of header bits of HE-SIG-A, HE-SIG-A1-R comprises a second set of header bits of HE-SIG-A, HE-SIG-A2 comprises a third set of header bits of HE-SIG-A and HE-SIG-A2-R comprises a fourth set of header bits of HE-SIG-A. This is indicated below:[60] For an HE ER SU PPDU, the HE-SIG-A field is composed of four subfields: HE-SIG-A1, HE-SIG-A1-R, HE-SIG-A2, and HE-SIG-A2-R. Each subfield contains 26 data bits. These four subfields are transmitted sequentially from HE-SIG-A1 to HE-SIG-A2-R. The data bits of the HE-SIG-A1 and HE-SIG-A2 subfields shall be BCC encoded at rate $R = 1/2$, be interleaved, be mapped to a BPSK constellation, and have pilots inserted. The HE-SIG-A1-R subfield has the same encoded bits as the HE-SIG-A1 subfield, and the encoded bits shall be mapped to a QBPSK constellation without interleaving and have pilots inserted. The constellation mappings of the HE-SIG-A field in an HE ER SU PPDU are shown in Figure 27-25. The QBPSK constellation on the HE-SIG-A1-R subfield is used to differentiate between an HE ER SU PPDU and an HE MU PPDU when $m = 1$ in Equation (27-11). The HE-SIG-A2-R subfield has the same encoded bits as the HE-SIG-A2 subfield, and the encoded bits shall be mapped to a BPSK constellation without interleaving and have pilots inserted. BCC encoding, data interleaving, constellation mapping, and pilot insertion follow the steps described in 17.3.5.6, 27.3.12.8, 17.3.5.8, and 17.3.5.9, respectively. 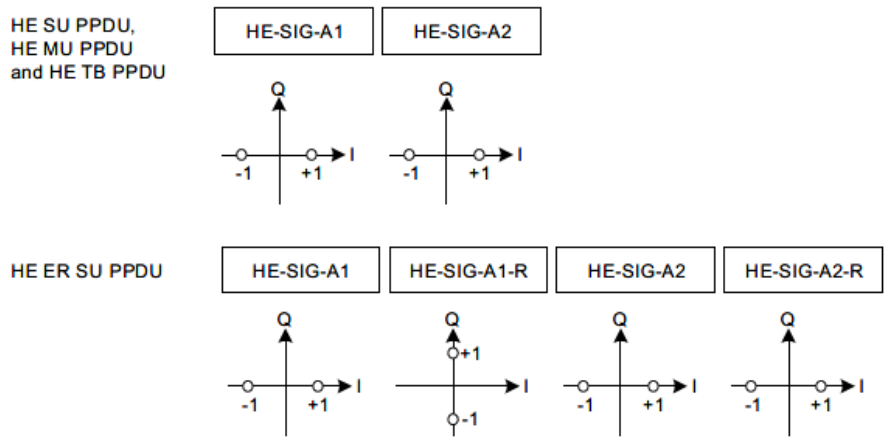 **Figure 27-25—Data subcarrier constellation of HE-SIG-A symbols**

[60] IEEE Std 802.11ax-2021, Sec. 27.3.11.4.

Claim 11	Wi-Fi 6 Accused Instrumentalities
	See also:[61]

Table 27-18—HE-SIG-A field of an HE SU PPDU and HE ER SU PPDU

Bit	Field	Number of bits	Description
HE-SIG-A1 subfield of HE-SIG-A field			
B0	Format	1	Differentiate an HE SU PPDU and HE ER SU PPDU from an HE TB PPDU: Set to 1 for an HE SU PPDU and HE ER SU PPDU.
B1	Beam Change	1	Set to 1 to indicate that the pre-HE modulated fields of the PPDU may be spatially mapped differently from the first symbol of the HE-LTF. Equation (27-6), Equation (27-9), Equation (27-12), Equation (27-14), Equation (27-16), and Equation (27-18) apply if the Beam Change field is 1. Set to 0 to indicate that the pre-HE modulated fields of the PPDU are spatially mapped the same way as the first symbol of the HE-LTF on each subcarrier. Equation (27-8), Equation (27-10), Equation (27-13), Equation (27-15), Equation (27-17), and Equation (27-19) apply if the Beam Change field is 0.
B2	UL/DL	1	Indicates whether the PPDU is sent UL or DL. Set to 1 if the PPDU is addressed to an AP. Set to 0 otherwise. See TXVECTOR parameter UPLINK_FLAG.
B3–B6	HE-MCS	4	For an HE SU PPDU: Set to n for HE-MCS n, where n = 0, 1, 2, …, 11. Values 12–15 are reserved. For an HE ER SU PPDU with Bandwidth field set to 0 (242-tone RU): Set to n for HE-MCS n, where n = 0, 1, 2. Values 3–15 are reserved. For an HE ER SU PPDU with Bandwidth field set to 1 (upper frequency 106-tone RU): Set to 0 for HE-MCS 0. Values 1–15 are reserved.
B7	DCM	1	Indicates whether DCM is applied to the Data field for the HE-MCS indicated. See Table 27-19 for the interpretation of this field. NOTE—DCM is applicable to only HE-MCSs 0, 1, 3, and 4. DCM is applicable to only 1 and 2 spatial streams.
B8–B13	BSS Color	6	An identifier of the BSS. See TXVECTOR parameter BSS_COLOR.

[61] IEEE Std 802.11ax-2021, Sec. 27.3.11.7.2

Claim 11	Wi-Fi 6 Accused Instrumentalities

Table 27-18—HE-SIG-A field of an HE SU PPDU and HE ER SU PPDU *(continued)*

Bit	Field	Number of bits	Description
B14	Reserved	1	Reserved and set to 1.
B15–B18	Spatial Reuse	4	Indicates whether spatial reuse modes are allowed during the transmission of this PPDU: Set to a value from Table 27-22 (see 26.11.6 and 26.10).
B19–B20	Bandwidth	2	For an HE SU PPDU: Set to 0 for 20 MHz. Set to 1 for 40 MHz. Set to 2 for 80 MHz. Set to 3 for 160 MHz and 80+80 MHz. For an HE ER SU PPDU: Set to 0 for 242-tone RU. Set to 1 for upper frequency 106-tone RU within the primary 20 MHz. Values 2 and 3 are reserved.
B21–B22	GI+HE-LTF Size	2	Indicates the GI duration and HE-LTF size. See Table 27-19 for the interpretation of this field.
B23–B25	NSTS And Midamble Periodicity	3	If the Doppler field is 0, indicates the number of space-time streams. Set to the number of space-time streams minus 1. For an HE ER SU PPDU, values 2–7 are reserved. If the Doppler field is 1, then B23-B24 indicates the number of space time streams, up to 4, and B25 indicates the midamble periodicity. B23-B24 is set to the number of space time streams minus 1. For an HE ER SU PPDU, values 2 and 3 are reserved. B25 is set to 0 for 10 symbol midamble periodicity, to 1 for 20 symbol midamble periodicity. See TXVECTOR parameter MIDAMBLE_PERIODICITY.
HE-SIG-A2 subfield of HE-SIG-A field			
B0–B6	TXOP	7	Set to 127 to indicate no duration information. Set to a value less than 127 to indicate the closest minimum bound on the duration information for NAV setting and protection of the TXOP as follows: If B0 is 0, the TXOP duration indicated is B1-B6, in units of 8 µs. If B0 is 1, the TXOP duration indicated is B1-B6, in units of 128 µs, plus 512 µs. See TXVECTOR parameter TXOP_DURATION.
B7	Coding	1	Indicates whether BCC or LDPC is used: Set to 0 to indicate BCC Set to 1 to indicate LDPC
B8	LDPC Extra Symbol Segment	1	Indicates the presence of the LDPC extra symbol segment: Set to 1 if an LDPC extra symbol segment is present. Set to 0 if an LDPC extra symbol segment is not present. Reserved and set to 1 if the Coding field is 0.
B9	STBC	1	Indicates whether STBC is applied to the Data field. See Table 27-19 for the interpretation of this field.

Claim 11	Wi-Fi 6 Accused Instrumentalities
	(cont.) **Table 27-18—HE-SIG-A field of an HE SU PPDU and HE ER SU PPDU *(continued)*** **Bit** / **Field** / **Number of bits** / **Description** B10 / Beamformed / 1 / Set to 1 if a beamforming steering matrix is applied to the HE modulated fields. Set to 0 otherwise. B11–B12 / Pre-FEC Padding Factor / 2 / Indicates the pre-FEC padding factor: Set to 0 to indicate a pre-FEC padding factor of 4. Set to 1 to indicate a pre-FEC padding factor of 1. Set to 2 to indicate a pre-FEC padding factor of 2. Set to 3 to indicate a pre-FEC padding factor of 3. B13 / PE Disambiguity / 1 / Indicates PE disambiguity as defined in 27.3.13. B14 / Reserved / 1 / Reserved and set to 1. B15 / Doppler / 1 / Set to 1 if one of the following applies: — The number of OFDM symbols in the Data field is larger than the signaled midamble periodicity plus 1 and the midamble is present. — The number of OFDM symbols in the Data field is less than or equal to the signaled midamble periodicity plus 1 (see 27.3.12.16, the midamble is not present, but the channel is fast varying. It recommends that midamble may be used for the PPDUs of the reverse link. Set to 0 otherwise. B16–B19 / CRC / 4 / CRC for bits 0–41 of the HE-SIG-A field (see 27.3.11.7.3). Bits 0–41 of the HE-SIG-A field correspond to bits 0–25 of the HE-SIG-A1 subfield followed by bits 0–15 of the HE-SIG-A2 subfield. B20–B25 / Tail / 6 / Used to terminate the trellis of the convolutional decoder. Set to 0. It is anticipated that discovery will provide further details of the manner of infringement of the Accused Instrumentalities. In addition, the foregoing structures may be implemented in alternative configurations and usages that are equivalent to this claim element. In addition, the foregoing structures may be implemented in alternative configurations and usages that are equivalent to this claim element because they perform substantially the same function of receiving, over the wireless communications channel, a second packet type comprising a second header field, wherein the second header field comprises four parts, a first part comprising a first set of header bits of the second header field, a second part comprising a second set of header bits of the second header field, a third part comprising a third set of header bits of the second header field and

Claim 11	Wi-Fi 6 Accused Instrumentalities
	a fourth part comprising a fourth set of header bits of the second header field, in substantially the same way of receiving, over the wireless communications channel, a second packet type comprising a second header field, wherein the second header field comprises four parts, a first part comprising a first set of header bits of the second header field, a second part comprising a second set of header bits of the second header field, a third part comprising a third set of header bits of the second header field and a fourth part comprising a fourth set of header bits of the second header field, to obtain the same result of providing additional diversity, reducing data loss and increasing decoding accuracy. For example, alternative equivalent configurations include the following, separately or in conjunction, which achieve the same functionalities provided by the claimed configurations: alternative configurations of HE PHY and PPDUs, including HE SU PPDU, HE MU PPDU, HE ER SU PPDU and HE TB PPDU; alternative configurations of the packet types or formats, headers fields, parts and bits, including HE-SIG-A, HE-SIG-A1, HE-SIG-A2, HE-SIG-A1-R, HE-SIG-A2-R, HE-SIG-B, HE-STF, HE-LTF, L-STF, L-LTF, L-SIG, RL-SIG and PE; alternative configurations of frequency and channel bands and bandwidth divisions, subdivisions, subchannels and subcarriers; alternative configurations of the HE STA, pre-HE [de]modulated and HE [de]modulated fields, transmitter, receiver, encoder, decoder, modulator and demodulator, and alternative symbols and symbol configuration, in transmitting, receiving, encoding, modulating or generating, including for alternative configurations for SU and/or MU.
wherein the first set of header bits of the second header field is the same as the second set of header bits of the second header field, wherein the third set of header bits of the second header field is the same as the fourth set of header bits of the second header field, and	The Accused Instrumentalities comprise wherein the first set of header bits of the second header field is the same as the second set of header bits of the second header field, wherein the third set of header bits of the second header field is the same as the fourth set of header bits of the second header field. See claim 1 (“wherein the first set of header bits of the second header field is the same as the second set of header bits of the second header field, wherein the third set of header bits of the second header field is the same as the fourth set of header bits of the second header field”).

Claim 11	Wi-Fi 6 Accused Instrumentalities
demodulating, by the demodulator, a first OFDM symbol followed by a second OFDM symbol followed by a third OFDM symbol followed by a fourth OFDM symbol, wherein the first OFDM symbol is used to receive the first part of the second header field, the second OFDM symbol is used to receive the second part of the second header field, the third OFDM symbol is used to receive the third part of the second header field, the fourth OFDM symbol is used to receive the fourth part of the second header field,	The Accused Instrumentalities comprise demodulating, by the demodulator, a first OFDM symbol followed by a second OFDM symbol followed by a third OFDM symbol followed by a fourth OFDM symbol, wherein the first OFDM symbol is used to receive the first part of the second header field, the second OFDM symbol is used to receive the second part of the second header field, the third OFDM symbol is used to receive the third part of the second header field, the fourth OFDM symbol is used to receive the fourth part of the second header field. For example, Wi-Fi 6 devices comprise demodulating, by the demodulator, a first OFDM symbol followed by a second OFDM symbol followed by a third OFDM symbol followed by a fourth OFDM symbol, wherein the first OFDM symbol is used to receive the first part of the second header field, the second OFDM symbol is used to receive the second part of the second header field, the third OFDM symbol is used to receive the third part of the second header field, the fourth OFDM symbol is used to receive the fourth part of the second header field. This is indicated below:[62]

[62] IEEE Std 802.11ax-2021, Sec. 27.3.6.6.

Claim 11	Wi-Fi 6 Accused Instrumentalities
	b) For an HE ER SU PPDU, the HE-SIG-A field consists of four subfields: HE-SIG-A1, HE-SIG-A1-R, HE-SIG-A2, and HE-SIG-A2-R. The HE-SIG-A1 and HE-SIG-A1-R subfields have the same data bits while the HE-SIG-A2 and HE-SIG-A2-R subfields have the same data bits as defined in 27.3.11.7. The HE-SIG-A field is constructed as follows: 1) Obtain the HE-SIG-A fields from the TXVECTOR. Add the reserved bits, append the calculated CRC, and then append the N_{tail} tail bits as shown in 27.3.11.7. This results in 52 uncoded bits. 2) BCC encoder: Encode the data by a convolutional encoder at the rate $R = 1/2$ as described in 17.3.5.6. 3) BCC interleaver: Interleave the data bits of the HE-SIG-A1 and HE-SIG-A2 subfields as described in 27.3.12.8. The data bits of the HE-SIG-A1-R and HE-SIG-A2-R subfields are not interleaved. 4) Constellation mapper: BPSK modulate the HE-SIG-A1, HE-SIG-A2, and HE-SIG-A2-R data bits as described in 17.3.5.8 to form the first, third, and fourth OFDM symbol of the HE-SIG-A field, respectively. QBPSK modulate the HE-SIG-A1-R encoded data bits to form the second OFDM symbol of the HE-SIG-A field. See also:[63]

[63] IEEE Std 802.11ax-2021, Sec. 27.3.11.4.

Claim 11	Wi-Fi 6 Accused Instrumentalities
	For an HE ER SU PPDU, the HE-SIG-A field is composed of four subfields: HE-SIG-A1, HE-SIG-A1-R, HE-SIG-A2, and HE-SIG-A2-R. Each subfield contains 26 data bits. These four subfields are transmitted sequentially from HE-SIG-A1 to HE-SIG-A2-R. The data bits of the HE-SIG-A1 and HE-SIG-A2 subfields shall be BCC encoded at rate $R = 1/2$, be interleaved, be mapped to a BPSK constellation, and have pilots inserted. The HE-SIG-A1-R subfield has the same encoded bits as the HE-SIG-A1 subfield, and the encoded bits shall be mapped to a QBPSK constellation without interleaving and have pilots inserted. The constellation mappings of the HE-SIG-A field in an HE ER SU PPDU are shown in Figure 27-25. The QBPSK constellation on the HE-SIG-A1-R subfield is used to differentiate between an HE ER SU PPDU and an HE MU PPDU when $m = 1$ in Equation (27-11). The HE-SIG-A2-R subfield has the same encoded bits as the HE-SIG-A2 subfield, and the encoded bits shall be mapped to a BPSK constellation without interleaving and have pilots inserted. BCC encoding, data interleaving, constellation mapping, and pilot insertion follow the steps described in 17.3.5.6, 27.3.12.8, 17.3.5.8, and 17.3.5.9, respectively. 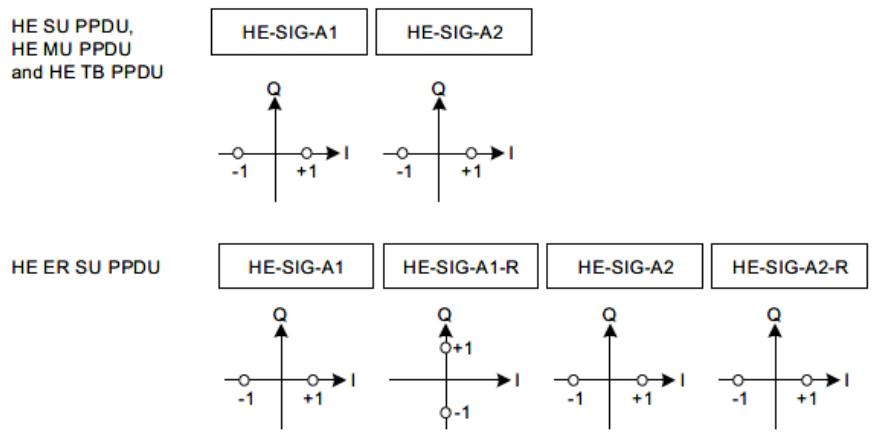 **Figure 27-25—Data subcarrier constellation of HE-SIG-A symbols** It is anticipated that discovery will provide further details of the manner of infringement of the Accused Instrumentalities. In addition, the foregoing structures may be implemented in alternative configurations and usages that are equivalent to this claim element.

Claim 11	Wi-Fi 6 Accused Instrumentalities
	In addition, the foregoing structures may be implemented in alternative configurations and usages that are equivalent to this claim element because they perform substantially the same function of demodulating a first OFDM symbol followed by a second OFDM symbol followed by a third OFDM symbol followed by a fourth OFDM symbol, wherein the first OFDM symbol is used to receive the first part of the second header field, the second OFDM symbol is used to receive the second part of the second header field, the third OFDM symbol is used to receive the third part of the second header field, the fourth OFDM symbol is used to receive the fourth part of the second header field, in substantially the same way of demodulating a first OFDM symbol followed by a second OFDM symbol followed by a third OFDM symbol followed by a fourth OFDM symbol, wherein the first OFDM symbol is used to receive the first part of the second header field, the second OFDM symbol is used to receive the second part of the second header field, the third OFDM symbol is used to receive the third part of the second header field, the fourth OFDM symbol is used to receive the fourth part of the second header field, to obtain the same result of providing additional diversity, reducing data loss and increasing decoding accuracy. For example, alternative equivalent configurations include the following, separately or in conjunction, which achieve the same functionalities provided by the claimed configurations: alternative configurations of HE PHY and PPDUs, including HE SU PPDU, HE MU PPDU, HE ER SU PPDU and HE TB PPDU; alternative configurations of the packet types or formats, headers fields, parts and bits, including HE-SIG-A, HE-SIG-A1, HE-SIG-A2, HE-SIG-A1-R, HE-SIG-A2-R, HE-SIG-B, HE-STF, HE-LTF, L-STF, L-LTF, L-SIG, RL-SIG and PE; alternative configurations of frequency and channel bands and bandwidth divisions, subdivisions, subchannels and subcarriers; alternative configurations of the HE STA, pre-HE [de]modulated and HE [de]modulated fields, transmitter, receiver, encoder, decoder, modulator and demodulator, and alternative symbols and symbol configuration, in transmitting, receiving, encoding, modulating or generating, including for alternative configurations for SU and/or MU.
wherein the second set of header bits of the second header field received using the second OFDM symbol are received in a different order	The Accused Instrumentalities comprise wherein the second set of header bits of the second header field received using the second OFDM symbol are received in a different order than the first set of header bits of the second header field received using the first OFDM symbol. See claim 1 (“wherein the second set of header bits of the second header field transmitted using the second

Claim 11	Wi-Fi 6 Accused Instrumentalities
than the first set of header bits of the second header field received using the first OFDM symbol,	OFDM symbol are transmitted in a different order than the first set of header bits of the second header field transmitted using the first OFDM symbol”).
wherein the fourth set of header bits of the second header field received using the fourth OFDM symbol are received in a different order than the third set of header bits of the second header field received using the third OFDM symbol.	The Accused Instrumentalities comprise wherein the fourth set of header bits of the second header field received using the fourth OFDM symbol are received in a different order than the third set of header bits of the second header field received using the third OFDM symbol. See claim 1 (“wherein the fourth set of header bits of the second header field transmitted using the fourth OFDM symbol are transmitted in a different order than the third set of header bits of the second header field transmitted using the third OFDM symbol”).

Appendix D
Claim Chart for U.S. Patent No. 10,917,272

Claim 12	Wi-Fi 6 Accused Instrumentalities
The media of claim 11, wherein the reception of the same header bits in the second OFDM symbol provides diversity to increase a likelihood of correctly receiving header information of the second packet type.	The Accused Instrumentalities comprise wherein the reception of the same header bits in the second OFDM symbol provides diversity to increase a likelihood of correctly receiving header information of the second packet type. See claim 2.

Appendix D
Claim Chart for U.S. Patent No. 10,917,272

Claim 13	Wi-Fi 6 Accused Instrumentalities
The media of claim 11, wherein the reception of the same header bits in the fourth OFDM symbol provides diversity to increase a likelihood of correctly receiving header information of the second packet type.	The Accused Instrumentalities comprise wherein the reception of the same header bits in the fourth OFDM symbol provides diversity to increase a likelihood of correctly receiving header information of the second packet type. See claim 3.

Appendix D
Claim Chart for U.S. Patent No. 10,917,272

Claim 15	Wi-Fi 6 Accused Instrumentalities
The media of claim 11, wherein the wireless transceiver supports one or more wireless standards.	The Accused Instrumentalities comprise wherein the wireless transceiver supports one or more wireless standards. For example, the Accused Instrumentalities comprise a media that supports the IEEE 802.11ax standard, also known as WiFi 6. See claim 5.

Appendix D
Claim Chart for U.S. Patent No. 10,917,272

Claim 17	Wi-Fi 6 Accused Instrumentalities
The media of claim 11, wherein the first packet type is received in a first channel bandwidth and the second packet type is received in a second channel bandwidth, wherein the first channel bandwidth is at least two times wider than the second channel bandwidth.	The Accused Instrumentalities comprise wherein the first packet type is received in a first channel bandwidth and the second packet type is received in a second channel bandwidth, wherein the first channel bandwidth is at least two times wider than the second channel bandwidth. See claim 7.

Claim 18	Wi-Fi 6 Accused Instrumentalities
The media of claim 17, wherein the reception of the same header bits in the second OFDM symbol provides diversity to increase a likelihood of correctly communicating header information of the second packet type.	The Accused Instrumentalities comprise wherein the reception of the same header bits in the second OFDM symbol provides diversity to increase a likelihood of correctly communicating header information of the second packet type. See claim 2.

Claim 19	Wi-Fi 6 Accused Instrumentalities
The media of claim 17, wherein the reception of the same header bits in the fourth OFDM symbol provides diversity to increase a likelihood of correctly communicating header information of the second packet type.	The Accused Instrumentalities comprise wherein the reception of the same header bits in the fourth OFDM symbol provides diversity to increase a likelihood of correctly communicating header information of the second packet type. See claim 3.

Appendix E
Claim Chart for U.S. Patent No. 11,212,146

Claim 1	Wi-Fi 6 Accused Instrumentalities
A wireless communication device, comprising:	The Accused Instrumentalities are a wireless communication device. For example, devices that comply with the IEEE 802.11ax standard ("Wi-Fi 6") comprise a wireless OFDM (Orthogonal Frequency Division Multiplexing) transceiver. The citations herein to the Wi-Fi 6 standard are further illustrative of the technical specifications implemented in and/or embodied by the Accused Instrumentalities and applicable whether or not the Accused Instrumentalities are standard compliant. For example, Wi-Fi 6 devices comprise a wireless communication device that includes the technical elements and limitations, as described in the Wi-Fi 6 Standard:[1]

[1] IEEE Std 802.11ax-2021, amendment to IEEE Std 802.11-2020 (cover).

Appendix E
Claim Chart for U.S. Patent No. 11,212,146

Claim 1	Wi-Fi 6 Accused Instrumentalities
	IEEE SA STANDARDS ASSOCIATION IEEE Standard for Information Technology— Telecommunications and Information Exchange between Systems Local and Metropolitan Area Networks— Specific Requirements **Part 11: Wireless LAN Medium Access Control (MAC) and Physical Layer (PHY) Specifications** **Amendment 1:** **Enhancements for High-Efficiency WLAN** IEEE Computer Society Developed by the LAN/MAN Standards Committee STANDARDS It is anticipated that discovery will provide further details of the manner of infringement of the Accused Instrumentalities. Upon information and belief, AX Wireless contends that these infringement contentions are equally applicable to all examples, aspects, applications, configurations, embodiments and instances of Defendants' Wi-Fi 6 devices.

Appendix E
Claim Chart for U.S. Patent No. 11,212,146

Claim 1	Wi-Fi 6 Accused Instrumentalities
a wireless receiver configured to receive a wireless packet through a communication channel, formats of the wireless packet including a first packet format and a second packet format, the first packet format comprising a first header field carried by a first orthogonal frequency division multiplexing (OFDM) symbol, the second packet format comprising both the first header field carried by the first OFDM symbol and a second header field carried by a second OFDM symbol which follows the first OFDM symbol, and the second header field being a repetition of the first header field; and	The Accused Instrumentalities comprise a wireless receiver configured to receive a wireless packet through a communication channel, formats of the wireless packet including a first packet format and a second packet format, the first packet format comprising a first header field carried by a first orthogonal frequency division multiplexing (OFDM) symbol, the second packet format comprising both the first header field carried by the first OFDM symbol and a second header field carried by a second OFDM symbol which follows the first OFDM symbol, and the second header field being a repetition of the first header field. For example, Wi-Fi 6 devices comprise a wireless receiver configured to receive a wireless packet through a communication channel, formats of the wireless packet including a first packet format and a second packet format, the first packet format comprising a first header field carried by a first orthogonal frequency division multiplexing (OFDM) symbol, the second packet format comprising both the first header field carried by the first OFDM symbol and a second header field carried by a second OFDM symbol which follows the first OFDM symbol, and the second header field being a repetition of the first header field. For example, the Wi-Fi 6 devices comprises a wireless receiver configured to receive a wireless packet through a communication channel. This feature is indicated below:[2] **17.3.10 PHY receiver specifications** **17.3.10.1 Introduction** The receive specifications associated with the PHY sublayer are described in 17.3.10.2 to 17.3.10.6. **17.3.10.2 Receiver minimum input sensitivity** The packet error ratio (PER) shall be 10% or less when the PSDU length is 1000 octets and the rate-dependent input level is as shown in Table 17-18. The minimum input levels are measured at the antenna connector (noise factor of 10 dB and 5 dB implementation margins are assumed).

[2] IEEE Std 802.11-2020, Sec. 17.3.10; 19.3.19; 19.3.21; 21.3.18; and 21.3.20

Claim 1	Wi-Fi 6 Accused Instrumentalities
	17.3.10.3 Adjacent channel rejection The adjacent channel rejection shall be measured by setting the desired signal's strength 3 dB above the rate-dependent sensitivity specified in Table 17-18 and raising the power of the interfering signal until 10% PER is caused for a PSDU length of 1000 octets. The difference in power between the signals in the interfering channel and the desired channel is the corresponding adjacent channel rejection. The interfering signal in the adjacent channel shall be a signal compliant with the OFDM PHY, unsynchronized with the signal in the channel under test. In an OFDM PHY the corresponding rejection shall be no less than specified in Table 17-18. An optional enhanced performance specification is provided for systems requiring improved immunity to out-of-channel interfering emissions. If a STA has dot11ACRType equal to 2, the adjacent channel rejection shall be no less than specified in Table 17-19. The interfering signal in the adjacent channel shall be a signal compliant with the OFDM PHY, using transmit mask M (see D.2.4), unsynchronized with the signal in the channel under test. The corresponding minimum receiver sensitivities for each modulation and coding rate are the same as in Table 17-18. **17.3.10.5 Receiver maximum input level** The receiver shall provide a maximum PER of 10% at a PSDU length of 1000 octets, for a maximum input level of –30 dBm measured at the antenna connector for any baseband modulation.

Appendix E
Claim Chart for U.S. Patent No. 11,212,146

Claim 1	Wi-Fi 6 Accused Instrumentalities
	19.3.19 HT PHY receiver specification **19.3.19.1 Receiver minimum input sensitivity** The packet error ratio (PER) shall be less than 10% for a PSDU length of 4096 octets with the rate-dependent input levels listed in Table 19-23 or less. The minimum input levels are measured at the antenna connector and are referenced as the average power per receive antenna. The number of spatial streams under test shall be equal to the number of utilized transmitting STA antenna (output) ports and also equal to the number of utilized device under test input ports. Each output port of the transmitting STA shall be connected through a cable to one input port of the device under test. The test in this subclause and the minimum sensitivity levels specified in Table 19-23 apply only to non-STBC modes, MCSs 0–31, 800 ns GI, and BCC. **19.3.19.2 Adjacent channel rejection** For all transmissions in a 20 MHz channel width, the adjacent channel rejection shall be measured by setting the desired signal's strength 3 dB above the rate-dependent sensitivity specified in Table 19-23 and raising the power of an interfering signal of 20 MHz bandwidth until 10% PER is caused for a PSDU length (cont.)

Claim 1	Wi-Fi 6 Accused Instrumentalities
	of 4096 octets. The difference in power between the signals in the interfering channel and the desired channel is the corresponding adjacent channel rejection. The adjacent channel center frequencies shall be separated by 20 MHz when operating in the 5 GHz band, and the adjacent channel center frequencies shall be separated by 25 MHz when operating in the 2.4 GHz band. For all transmissions in a 40 MHz channel width, the adjacent channel rejection shall be measured by setting the desired signal's strength 3 dB above the rate-dependent sensitivity specified in Table 19-23 and raising the power of an interfering signal of 40 MHz bandwidth until 10% PER is caused for a PSDU length of 4096 octets. The difference in power between the signals in the interfering channel and the desired channel is the corresponding adjacent channel rejection. The adjacent channel center frequencies shall be separated by 40 MHz. The interfering signal in the adjacent channel shall be a signal compliant with the HT PHY, unsynchronized with the signal in the channel under test. The corresponding rejection shall be no less than specified in Table 19-23. The interference signal shall have a minimum duty cycle of 50%. The test in this subclause and the adjacent channel rejection levels specified in Table 19-23 apply only to non-STBC modes, MCSs 0–31, 800 ns GI, and BCC. **19.3.19.4 Receiver maximum input level** The receiver shall provide a maximum PER of 10% at a PSDU length of 4096 octets, for a maximum input level of –30 dBm in the 5 GHz band and –20 dBm in the 2.4 GHz band, measured at each antenna for any baseband modulation.

Appendix E
Claim Chart for U.S. Patent No. 11,212,146

Claim 1	Wi-Fi 6 Accused Instrumentalities
	19.3.21 PHY receive procedure Typical PHY receive procedures are shown in Figure 19-25 and Figure 19-26. The receive procedures correspond to HT-mixed format and HT-greenfield format, respectively. A typical state machine implementation of the receive PHY is given in Figure 19-27. These receive procedures and state machine do not describe the operation of optional features, such as LDPC or STBC. If the detected format indicates a non-HT PPDU format (denoted "Not HT-SIG" in Figure 19-27), refer to the receive procedure and state machine in 17.3.12 or 18.3.5. Further, through station management (via the PLME), the PHY is set to the appropriate frequency, as specified in 19.4. Other receive parameters, such as RSSI and indicated DATARATE, may be accessed via the PHY SAP. **21.3.18 VHT receiver specification** For tests in this subclause, the input levels are measured at the antenna connector and are referenced as the average power per receive antenna. The number of spatial streams under test shall be equal to the number of utilized transmitting STA antenna (output) ports and also equal to the number of utilized Device Under Test input ports. Each output port of the transmitting STA shall be connected through a cable to one input port of the Device Under Test. **21.3.18.1 Receiver minimum input sensitivity** The packet error ratio (PER) shall be less than 10% for a PSDU length of 4096 octets with the rate-dependent input levels listed in Table 21-25. The test in this subclause and the minimum sensitivity levels specified in Table 21-25 apply only to non-STBC modes, 800 ns GI, BCC, and VHT PPDUs.

Claim 1	Wi-Fi 6 Accused Instrumentalities
	21.3.18.2 Adjacent channel rejection Adjacent channel rejection for *W* MHz channels (where *W* is 20, 40, 80 or 160) shall be measured by setting the desired signal's strength 3 dB above the rate-dependent sensitivity specified in Table 21-25 and raising the power of the interfering signal of *W* MHz bandwidth until 10% PER is caused for a PSDU length of 4096 octets. The difference in power between the signals in the interfering channel and the desired channel is the corresponding adjacent channel rejection. The center frequency of the adjacent channel shall be placed *W* MHz away from the center frequency of the desired signal. Adjacent channel rejection for 80+80 MHz channels shall be measured by setting the desired signal's strength 3 dB above the rate-dependent sensitivity specified in Table 21-25. Then, an interfering signal of 80 MHz bandwidth is introduced, where the center frequency of the interfering signal is placed 80 MHz away from the center frequency of the frequency segment lower in frequency of the desired signal. The power of the interfering signal is raised until 10% PER is caused for a PSDU length of 4096 octets. Let ΔP_1 be the power difference between the interfering and desired signal. Next, the interfering signal of 80 MHz bandwidth is moved to a frequency where the center frequency of the interfering signal is 80 MHz away from the center frequency of the frequency segment higher in frequency of the desired signal. The power of the interfering signal is raised until 10% PER is caused for a PSDU length of 4096 octets. Let ΔP_2 be the power difference between the interfering and desired signal. The smaller value between ΔP_1 and ΔP_2 is the corresponding adjacent channel rejection. The interfering signal in the adjacent channel shall be a signal compliant with the VHT PHY, unsynchronized with the signal in the channel under test, and shall have a minimum duty cycle of 50%. The corresponding rejection shall be no less than specified in Table 21-26. The test in this subclause and the adjacent sensitivity levels specified in Table 21-26 apply only to non-STBC modes, 800 ns GI, BCC, and VHT PPDUs.

Claim 1	Wi-Fi 6 Accused Instrumentalities
	21.3.18.4 Receiver maximum input level The receiver shall provide a maximum PER of 10% at a PSDU length of 4096 octets, for a maximum input level of –30 dBm, measured at each antenna for any baseband VHT modulation. **21.3.20 PHY receive procedure** A typical PHY receive procedure is shown in Figure 21-36 for VHT format. A typical state machine implementation of the receive PHY is given in Figure 21-37. This receive procedure and state machine do not describe the operation of optional features, such as LDPC or STBC. If the detected format indicates a NON_HT PPDU format (denoted "Not VHT-SIG-A" in Figure 21-37), refer to the receive procedure and state machine in 17.3.12. If the detected format indicates an HT PPDU format (denoted "HT_SIG (HT GF preamble)" and "HT_SIG (HT MF preamble)" in Figure 21-37), refer to the receive procedure and state machine in 19.3.21. Further, through station management (via the PLME) the PHY is set to the appropriate frequency, as specified in 21.4. The PHY has also been configured with group information (i.e., group membership and position in group) so that it can receive data intended for the STA. Other receive parameters, such as RSSI and indicated DATARATE, may be accessed via the PHY SAP.

Claim 1	Wi-Fi 6 Accused Instrumentalities
	The wireless receiver is configured to receive a wireless packet through a communication channel. Wi-Fi 6 devices comprise high-efficiency stations (HE STAs) capable of receiving physical layer protocol data units (PPDUs) via 2.4, 5, and 6 Ghz channels. This is indicated below:[3] **27. High-efficiency (HE) PHY specification** **27.1 Introduction** **27.1.1 Introduction to the HE PHY** Clause 27 specifies the PHY entity for a high-efficiency (HE) orthogonal frequency division multiplexing (OFDM) system. In addition to the requirements in Clause 27, an HE STA shall be capable of transmitting and receiving PPDUs that are compliant with the mandatory requirements of the following PHY specifications: — Clause 19 and Clause 21 if the HE STA supports an operating channel width greater than or equal to 80 MHz and is operating in the 5 GHz band. — Clause 19 and Clause 21 transmission and reception on 20 MHz channel width (see 26.17.1) if the HE STA is a 20 MHz-only non-AP HE STA and is operating in the 5 GHz band. — Clause 19 if the HE STA is operating in the 2.4 GHz band. — Clause 17 if the HE STA is operating in the 6 GHz band. For 2.4 GHz band operation, the HE PHY is based on HT PHY defined in Clause 19, which in turn is based on the OFDM PHY defined in Clause 17. For 5 GHz band operation, the HE PHY is based on the VHT PHY defined in Clause 21, which in turn is based on the HT PHY defined in Clause 19, which in turn is further based on the OFDM PHY defined in Clause 17. For 6 GHz band operation, the HE PHY is based on the OFDM PHY defined in Clause 17.

[3] IEEE Std 802.11ax-2021, Sec. 27.1.1.

Claim 1	Wi-Fi 6 Accused Instrumentalities
	See also:[4] **27.3.22 HE receive procedure** Typical PHY receive procedures are shown in Figure 27-59, Figure 27-60, Figure 27-61, and Figure 27-62, respectively. 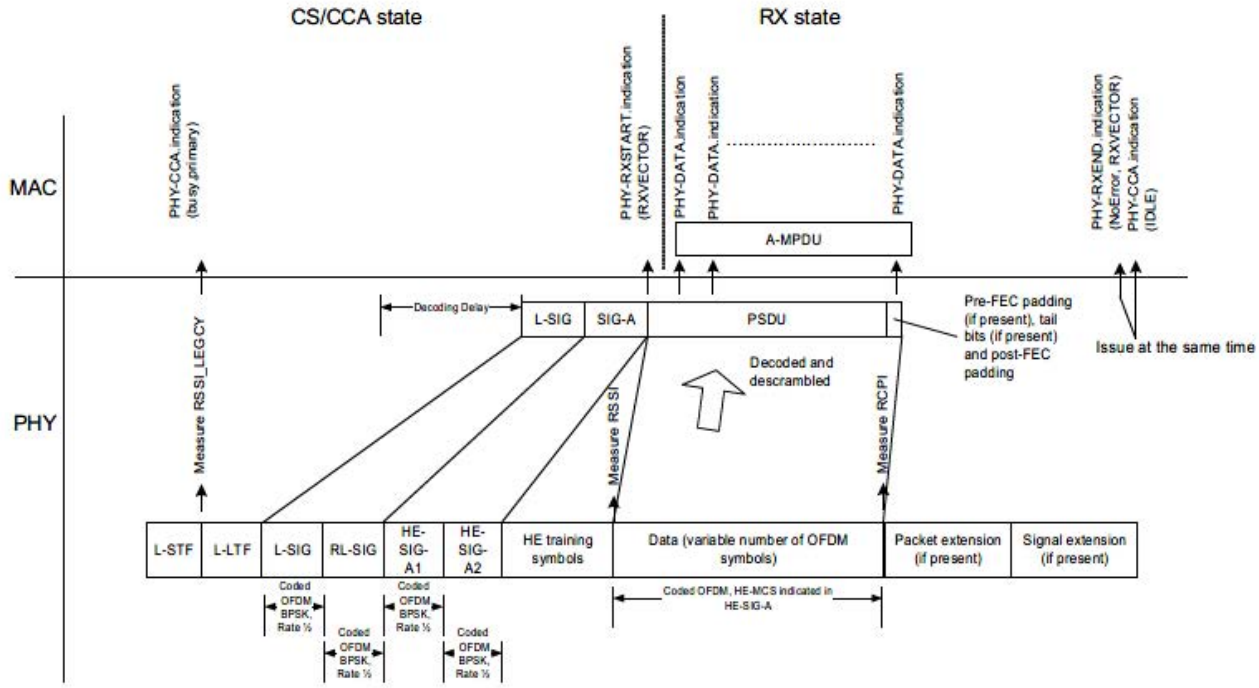 **Figure 27-59—PHY receive procedure for an HE SU PPDU**

[4] IEEE Std 802.11ax-2021, Sec. 27.3.22

Claim 1	Wi-Fi 6 Accused Instrumentalities
	(cont.) 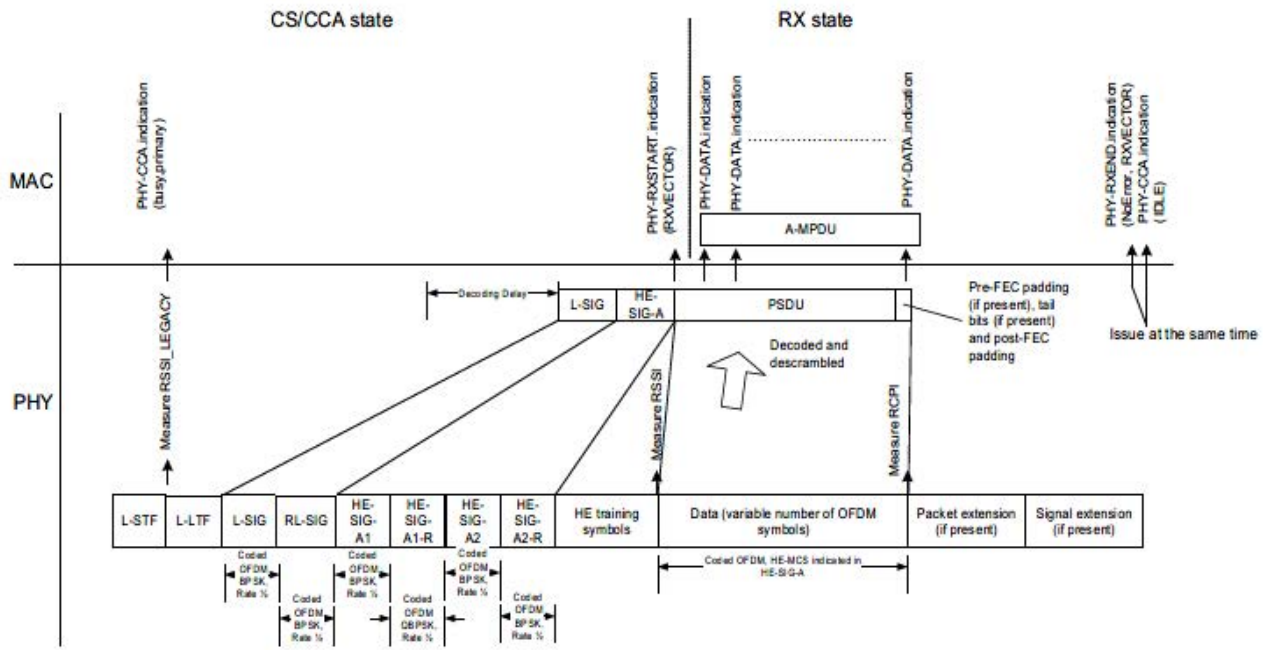 **Figure 27-60—PHY receive procedure for an HE ER SU PPDU**	

Claim 1	Wi-Fi 6 Accused Instrumentalities
	(cont.) 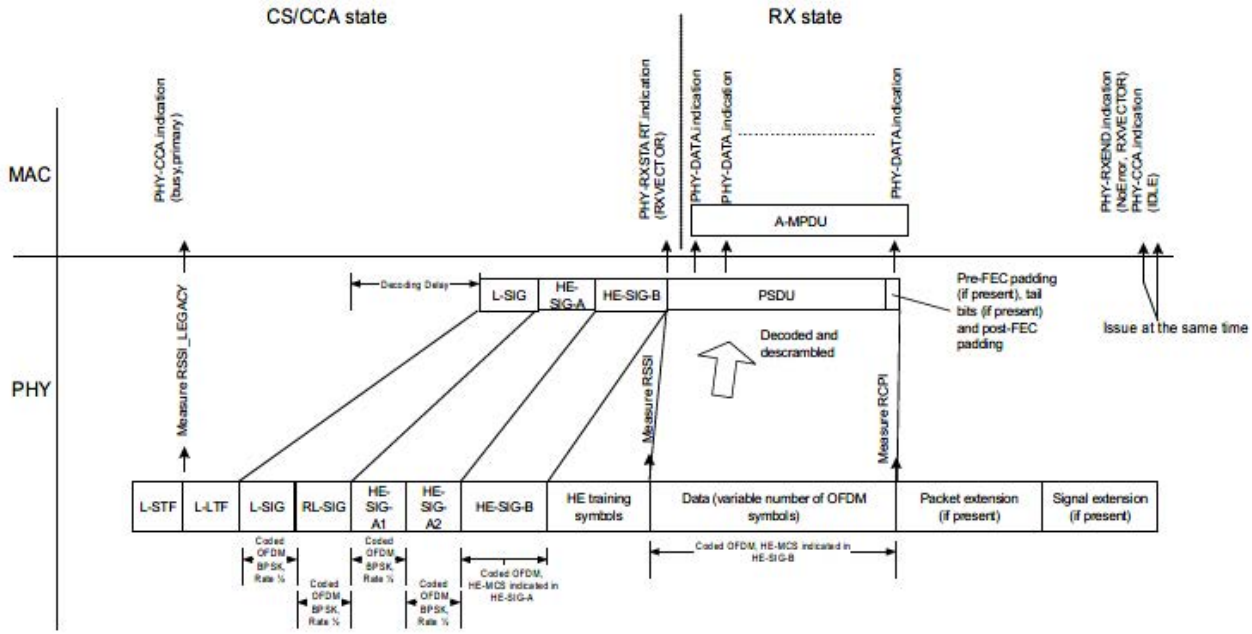 **Figure 27-61—PHY receive procedure for an HE MU PPDU**

Claim 1	Wi-Fi 6 Accused Instrumentalities
	(cont.) 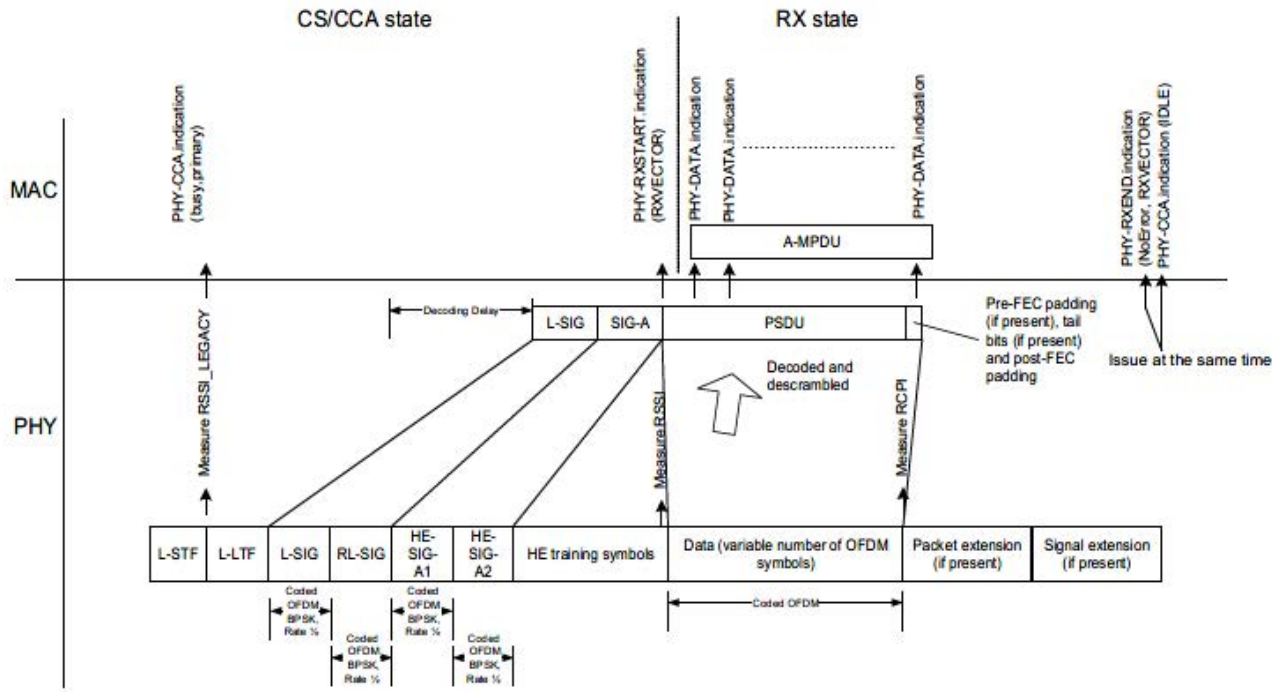 **Figure 27-62—PHY receive procedure for an HE TB PPDU**

Appendix E
Claim Chart for U.S. Patent No. 11,212,146

Claim 1	Wi-Fi 6 Accused Instrumentalities
	See also:[5] **27.2.6 Support for non-HT, HT, and VHT formats** **27.2.6.1 General** An HE STA logically contains Clause 15, Clause 16, Clause 17, Clause 18, Clause 19, Clause 21, and Clause 27 PHYs. The MAC interacts with the PHYs via the Clause 27 PHY service interface, which in turn interacts with the Clause 15, Clause 16, Clause 17, Clause 18, and Clause 19, and Clause 21 PHY service interfaces as shown in Figure 27-1, Figure 27-2, and Figure 27-3. 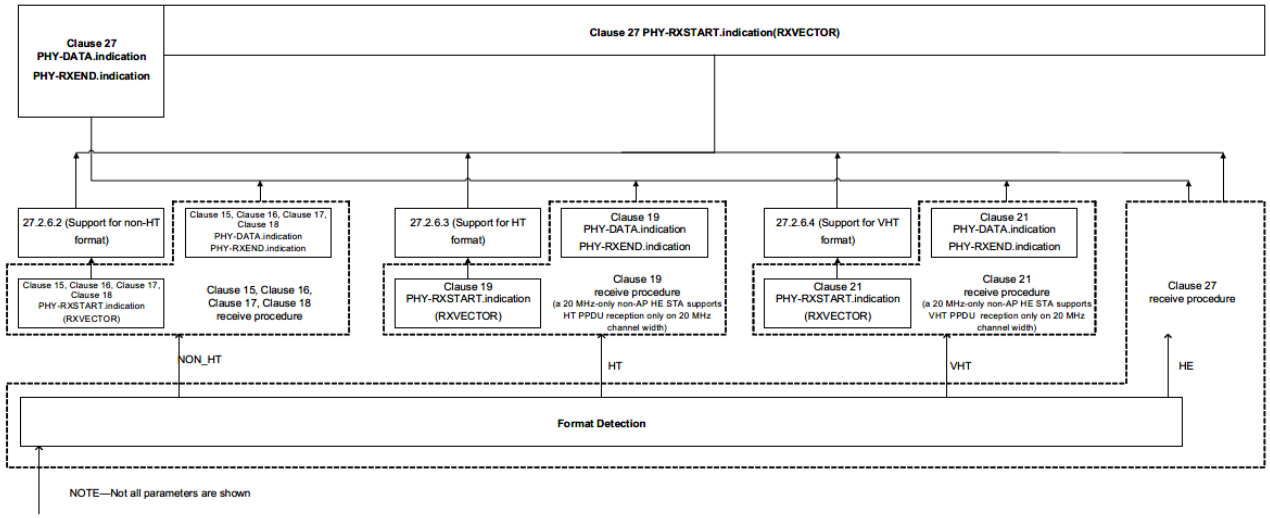 **Figure 27-2—PHY interaction on receive for various PPDU formats**

[5] IEEE Std 802.11ax-2021, Sec. 27.2.6.1.

Appendix E
Claim Chart for U.S. Patent No. 11,212,146

Claim 1	Wi-Fi 6 Accused Instrumentalities
	Formats of the wireless packet include a first packet format and a second packet format. PPDUs include a first packet format and a second packet format. This is indicated below:[6] **27.1.4 PPDU formats** The structure of the PPDU transmitted by an HE STA is determined by the TXVECTOR parameters as defined in Table 27-1. The FORMAT parameter determines the overall structure of the PPDU and can take on one of the following values: — Non-HT format (NON_HT), based on Clause 17 or Clause 18 and including non-HT duplicate format. — HT-mixed format (HT_MF) as specified in Clause 19. — HT-greenfield format (HT_GF) as specified in Clause 19. — VHT format (VHT) as defined in Clause 21. — HE SU PPDU format (HE_SU) that carries a single PSDU. With this format the HE-SIG-A field is not repeated. — HE ER SU PPDU format (HE_ER_SU) that carries a single PSDU. It is similar to the HE SU PPDU format, except that the HE-SIG-A field is repeated. — HE MU PPDU format (HE_MU) that carries one or more PSDUs to one or more users. — HE TB PPDU format (HE_TB) that carries a single PSDU and is sent in response to a PPDU that carries a triggering frame. The preamble format prior to the HE-STF field is identical to the HE SU PPDU.

[6] IEEE Std 802.11ax-2021, Sec. 27.1.4.

Appendix E
Claim Chart for U.S. Patent No. 11,212,146

Claim 1	Wi-Fi 6 Accused Instrumentalities
	The first packet format comprises a first header field carried by a first orthogonal frequency division multiplexing (OFDM) symbol. This is shown below:[7] **19.3.2 PPDU format** Two formats are defined for the PPDU: HT-mixed format and HT-greenfield format. These two formats are called *HT formats*. Figure 19-1 shows the non-HT format[44] and the HT formats. The HT formats can be used for MCS 32 that provides the lowest rate in a 40 MHz channel (see in 19.3.11.11.5). In addition to the HT formats, there is a non-HT duplicate format (specified in 19.3.11.12) that duplicates the 20 MHz non-HT packet in two 20 MHz halves of a 40 MHz channel. 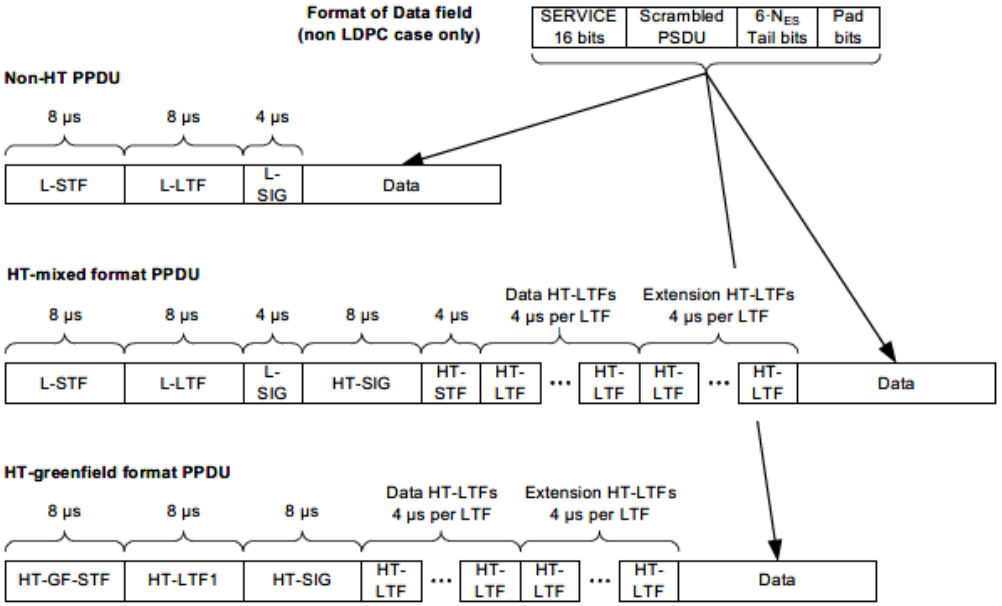 **Figure 19-1—PPDU format**

[7] IEEE Std 802.11-2020, Sec. 19.3.2.

Claim 1	Wi-Fi 6 Accused Instrumentalities
	(cont.) The elements of the PPDU are summarized in Table 19-5. **Table 19-5—Elements of the HT PPDU** **Element** — **Description** L-STF — Non-HT Short Training field L-LTF — Non-HT Long Training field L-SIG — Non-HT SIGNAL field HT-SIG — HT SIGNAL field HT-STF — HT Short Training field

Claim 1	Wi-Fi 6 Accused Instrumentalities
	See also:[8] **21.3.2 VHT PPDU format** A single PPDU format is defined for this PHY: the VHT PPDU format. Figure 21-4 shows the VHT PPDU format. 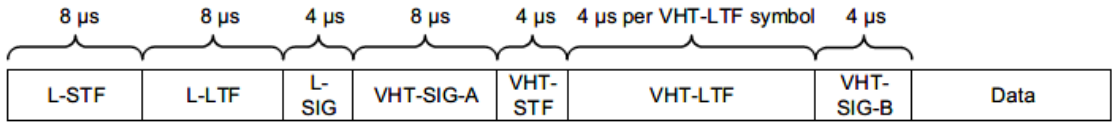 **Figure 21-4—VHT PPDU format** The fields of the VHT PPDU format are summarized in Table 21-4. **Table 21-4—Fields of the VHT PPDU** | Field | Description | |---|---| | L-STF | Non-HT Short Training field | | L-LTF | Non-HT Long Training field | | L-SIG | Non-HT SIGNAL field | | VHT-SIG-A | VHT Signal A field | | VHT-STF | VHT Short Training field | | VHT-LTF | VHT Long Training field | | VHT-SIG-B | VHT Signal B field | | Data | The Data field carrying the PSDU(s) |

[8] IEEE Std 802.11-2020, Sec. 21.3.2.

Claim 1	Wi-Fi 6 Accused Instrumentalities
	The second packet format comprises both the first header field carried by the first OFDM symbol and a second header field carried by a second OFDM symbol which follows the first OFDM symbol. This is indicated below:[9] **27.3.4 HE PPDU formats** Four HE PPDU formats are defined: HE SU PPDU, HE MU PPDU, HE ER SU PPDU, and HE TB PPDU. The HE sounding NDP is a variant of the HE SU PPDU and defined in 27.3.17. The HE TB feedback NDP is a variant of the HE TB PPDU and defined in 27.3.18. NOTE—The HE ER SU PPDU is not a variant of the HE SU PPDU. Requirements related to HE SU PPDUs and HE ER SU PPDUs are specified separately. The format of the HE SU PPDU is defined as in Figure 27-8. This PPDU format is used for SU transmission, and in this format, the HE-SIG-A field is not repeated. 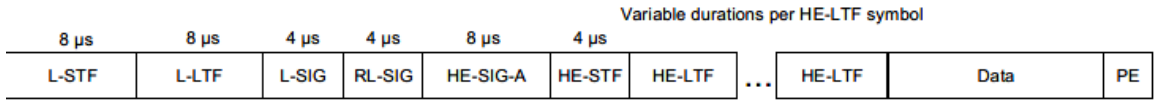 **Figure 27-8—HE SU PPDU format** The format of the HE MU PPDU is defined as in Figure 27-9. This format is used for transmission to one or more users if the PPDU is not a response of a Trigger frame. In the HE MU PPDU, the HE-SIG-A field is not repeated. The HE-SIG-B field is present in this format. 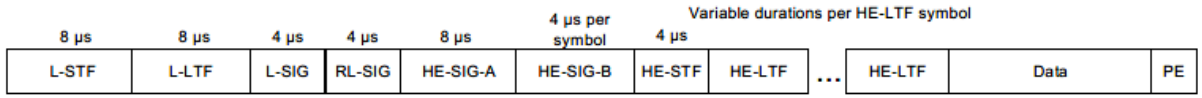 **Figure 27-9—HE MU PPDU format**

[9] IEEE Std 802.11ax-2021, Sec. 27.3.4.

Claim 1	Wi-Fi 6 Accused Instrumentalities
	(cont.) The format of the HE ER SU PPDU is defined as in Figure 27-10. This format is used for SU transmission, and in this format, the HE-SIG-A field is twice as long as the HE-SIG-A field in other HE PPDU formats. 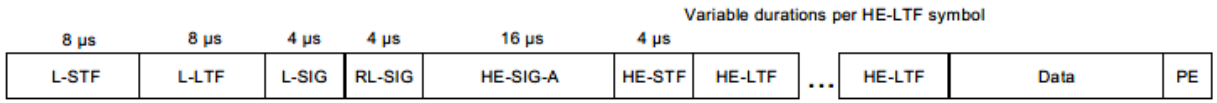 **Figure 27-10—HE ER SU PPDU format** The format of the HE TB PPDU is defined as in Figure 27-11. This format is used for a transmission that is a response to a triggering frame from an AP. The format of the HE TB PPDU is the same as the HE SU PPDU, except that the duration of the HE-STF field in the HE TB PPDU is twice the duration of the HE-STF field in the HE SU PPDU. 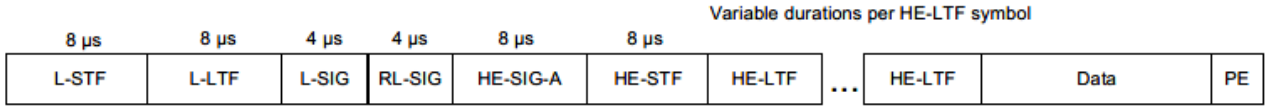 **Figure 27-11—HE TB PPDU format**

Claim 1	Wi-Fi 6 Accused Instrumentalities
	The second header field is a repetition of the first header field. This is indicated below:[10] The fields of the HE PPDU formats are summarized in Table 27-11. **Table 27-11—HE PPDU fields** **Field** / **Description** L-STF / Non-HT Short Training field L-LTF / Non-HT Long Training field L-SIG / Non-HT SIGNAL field RL-SIG / Repeated Non-HT SIGNAL field HE-SIG-A / HE SIGNAL A field HE-SIG-B / HE SIGNAL B field HE-STF / HE Short Training field HE-LTF / HE Long Training field Data / The Data field carrying the PSDU(s) PE / Packet extension field The RL-SIG, HE-SIG-A, HE-STF, HE-LTF, and PE fields are present in all HE PPDU formats. The HE-SIG-B field is present only in the HE MU PPDU. The PE field is defined in 27.3.13. The L-STF, L-LTF, L-SIG, RL-SIG, HE-SIG-A, and HE-SIG-B fields are referred to as *pre-HE modulated fields*, while the HE-STF, HE-LTF, Data, and PE fields are referred to as *HE modulated fields*.

[10] IEEE Std 802.11ax-2021, Sec. 27.3.4.

Appendix E
Claim Chart for U.S. Patent No. 11,212,146

Claim 1	Wi-Fi 6 Accused Instrumentalities
	As indicated above, the first header field (L-SIG) and the second header field (RL-SIG) each comprises an OFDM symbol. See also:[11] Fig. 1: Legacy PPDU formats and new HE PPDU formats 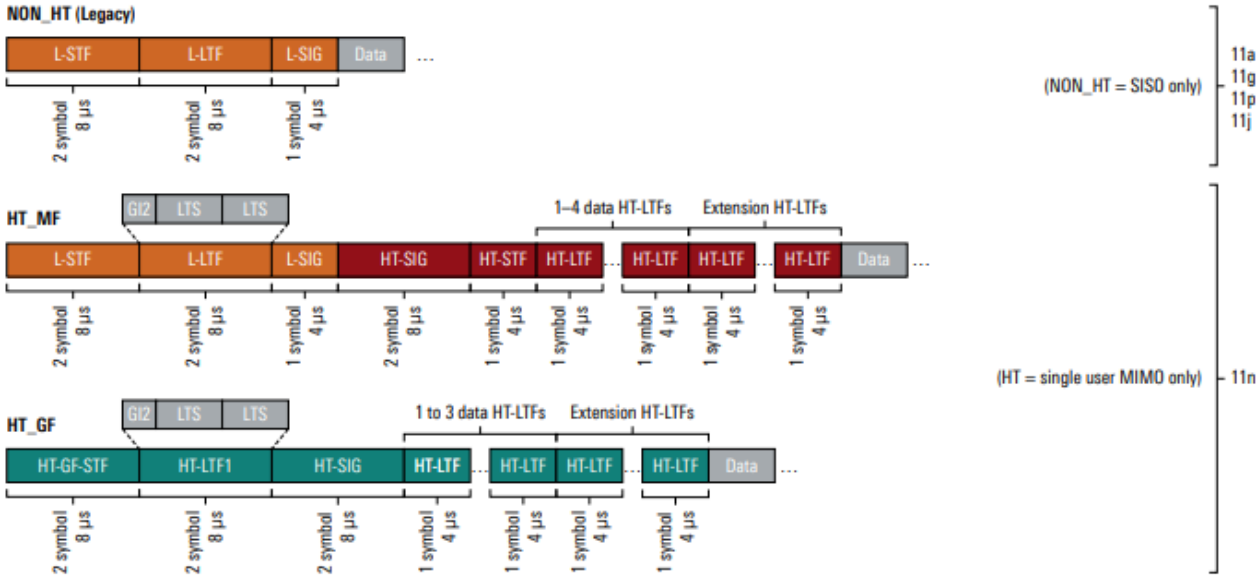

[11] Rohde & Schwarz, White Paper, IEEE 802.11ax Technology Introduction, Ver. 1.0, at pp. 7-8 (available at https://scdn.rohde-schwarz.com/ur/pws/dl_downloads/premiumdownloads/premium_dl_brochures_and_datasheets/premium_dl_whitepaper/IEEE-802-11ax-Technology-Introduction_wp_3609-9470-52_v0100.pdf).

Appendix E
Claim Chart for U.S. Patent No. 11,212,146

Claim 1	Wi-Fi 6 Accused Instrumentalities
	(cont.) 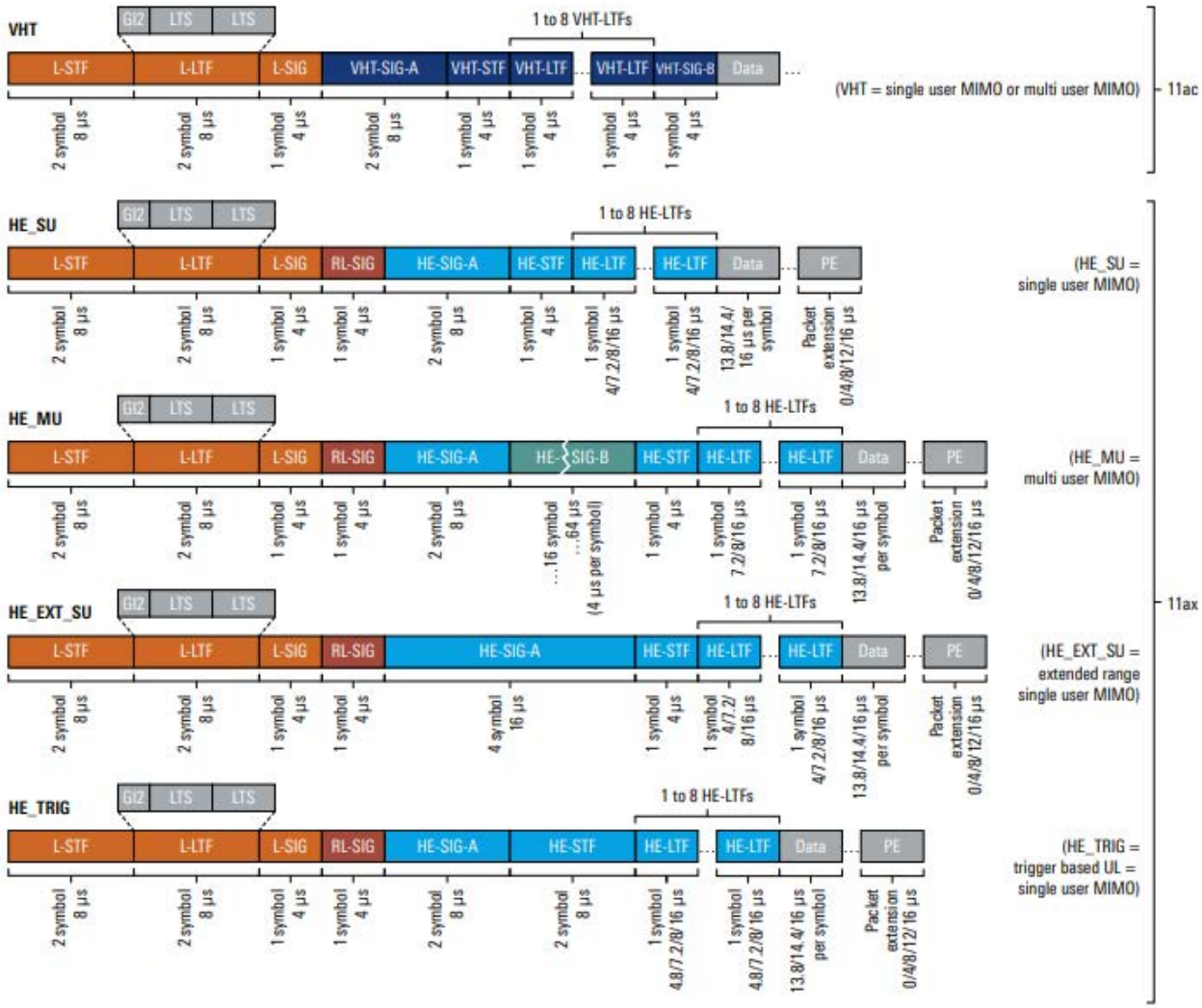

Claim 1	Wi-Fi 6 Accused Instrumentalities
	See also:[12] **27.3.11.5 L-SIG field** The L-SIG field is used to communicate rate and length information. The structure of the L-SIG field is defined in Figure 17-5. In an HE PPDU, the RATE field shall be set to the value representing 6 Mb/s in the "Rate (20 MHz channel spacing)" column of Table 17-6. In a non-HT duplicate PPDU, the RATE field is defined in 17.3.4.2 using the L_DATARATE parameter in the TXVECTOR. For an HE TB PPDU, the LENGTH field is set to the TXVECTOR parameter L_LENGTH. For an HE SU PPDU, HE ER SU PPDU, and HE MU PPDU, the LENGTH field is set to the value given by the Equation (27-11). $$\text{Length} = \left\lceil \frac{\text{TXTIME} - \mathit{SignalExtension} - 20}{4} \right\rceil \times 3 - 3 - m \qquad (27\text{-}11)$$ where TXTIME — is defined in 27.4.3 (in µs) *m* — is 1 for an HE MU PPDU and HE ER SU PPDU and 2 otherwise *SignalExtension* — is 0 µs if the TXVECTOR parameter NO_SIG_EXTN is true and is aSignalExtension as defined in Table 27-54 if the TXVECTOR parameter NO_SIG_EXTN is false In a non-HT duplicate PPDU, the LENGTH field is defined in 17.3.4.3 using the L_LENGTH parameter in the TXVECTOR. The Reserved (R) field shall be set to 0. The Parity (P) field has the even parity of bits 0-16. The SIGNAL TAIL field shall be set to 0. The L-SIG field shall be encoded, interleaved, and mapped following the steps described in 17.3.5.6, 17.3.5.7, and 17.3.5.8. The stream of 48 complex numbers generated by these steps is denoted by

[12] IEEE Std 802.11ax-2021, Sec. 27.3.11.5.

Claim 1	Wi-Fi 6 Accused Instrumentalities
	(cont.) d_k, $k = 0, \ldots, 47$ and is mapped to subcarriers [–26, 26]. In addition, values [–1, –1, –1, 1] are mapped to the extra subcarriers [–28, –27, 27, 28] of the L-SIG field of a 20 MHz HE PPDU. Subcarriers [–28, –27, 27, 28] are also BPSK modulated. Pilots shall be inserted as described in 17.3.5.9. If the TXVECTOR parameter BEAM_CHANGE is 1 or not present, the time domain waveform of the L-SIG field, transmitted on frequency segment i_{Seg} and transmit chain i_{TX}, shall be as given by Equation (27-12). $$r_{\text{L-SIG}}^{(i_{Seg}, i_{TX})}(t) = \frac{1}{\sqrt{N_{TX} \cdot N_{\text{L-SIG}}^{\text{Tone}} \cdot \frac{\lvert\Omega_{20\text{MHz}}\rvert}{N_{20\text{MHz}}}}} w_{T_{\text{L-SIG}}}(t) \sum_{i_{BW} \in \Omega_{20\text{MHz}}} \sum_{k=-28}^{28} \left(\begin{array}{l} \Upsilon_{(k - K_{\text{Shift}}(i_{BW})), \text{BW}} \eta_{\text{L-SIG}, k} (D_{k,20} + p_0 P_k) \\ \cdot \exp(j2\pi(k - K_{\text{Shift}}(i_{\text{BW}}))\Delta_{F, \text{Pre-HE}}(t - T_{GI, \text{Pre-HE}} - T_{CS}^{i_{TX}})) \end{array} \right) \quad (27\text{-}12)$$ where $\eta_{\text{L-SIG}, k}$ is a PPDU-dependent scaling factor for the L-SIG field on the subcarrier k defined as follows: $$\eta_{\text{L-SIG}, k} = \begin{cases} \sqrt{2}, & k = \pm 28, \pm 27 \text{ for an HE ER SU PPDU} \\ \left[\frac{1}{\sqrt{2}}, 1\right], & \text{for an HE TB PPDU} \\ 1, & \text{otherwise} \end{cases}$$

Claim 1	Wi-Fi 6 Accused Instrumentalities
	(cont.) $T_{GI,\text{Pre-HE}}$ is given in Table 27-12 $K_{Shift}(i) = (N_{20\text{MHz}} - 1 - 2i) \cdot 32$ $D_{k,20} = \begin{cases} 0, k = 0, \pm 7, \pm 21 \\ -1, k = -28, -27, 27 \\ 1, k = 28 \\ d_{M^r_{20}(k)}, \text{otherwise} \end{cases}$ $M^r_{20}(k) = \begin{cases} k + 26, -26 \le k \le -22 \\ k + 25, -20 \le k \le -8 \\ k + 24, -6 \le k \le -1 \\ k + 23, 1 \le k \le 6 \\ k + 22, 8 \le k \le 20 \\ k + 21, 22 \le k \le 26 \end{cases}$ P_k is defined in 17.3.5.10 p_0 is the first pilot value in the sequence defined in 17.3.5.10 $N^{\text{Tone}}_{\text{L-SIG}}$ is defined in Table 27-16 $T^{i_{TX}}_{CS}$ represents the cyclic shift for transmit chain i_{TX} with a value given in 27.3.11.2.1 NOTE—$M^r_{20}(k)$ is a "reverse" function of the function $M(k)$ defined in 17.3.5.10.

Claim 1	Wi-Fi 6 Accused Instrumentalities
	(cont.) If the TXVECTOR parameter BEAM_CHANGE is 0, the time domain waveform of the L-SIG field, transmitted on frequency segment i_{Seg} and transmit chain i_{TX}, shall be as given by Equation (27-13). $$r_{\text{L-SIG}}^{(i_{Seg}, i_{TX})}(t) = \frac{1}{\sqrt{N_{STS} \cdot N_{\text{L-SIG}}^{\text{Tone}} \cdot \frac{\lvert\Omega_{20\text{MHz}}\rvert}{N_{20\text{MHz}}}}} w_{T_{\text{L-SIG}}}(t) \quad (27\text{-}13)$$ $$\sum_{i_{BW}=0}^{N_{20\text{MHz}}-1} \sum_{k=-28}^{28} \sum_{m=1}^{N_{STS}} \left(\left[Q_{4(k-K_{\text{Shift}}(i_{BW}))}^{(i_{Seg})} \right]_{i_{TX}, m} \left[A_{\text{HE-LTF}}^{4(k-K_{\text{Shift}}(i_{BW}))} \right]_{m,1} \eta_{\text{L-SIG}, k}(D_{k,20} + p_0 P_k) \cdot \exp(j2\pi(k - K_{\text{Shift}}(i_{\text{BW}}))\Delta_{F, \text{Pre-HE}}(t - T_{GI, \text{Pre-HE}} - T_{CS, \text{HE}}(m))) \right)$$ where $T_{CS, \text{HE}}(m)$ represents the cyclic shift for space-time stream m as defined in 27.3.11.2.2 $Q_k^{(i_{Seg})}$ is defined in 27.3.10 $A_{\text{HE-LTF}}^k$ is defined in Equation (27-55)

Claim 1	Wi-Fi 6 Accused Instrumentalities
	See also:[13] **27.3.11.6 RL-SIG field** The RL-SIG field is a repeat of the L-SIG field and is used to differentiate an HE PPDU from a non-HT PPDU, HT PPDU, and VHT PPDU. If the TXVECTOR parameter BEAM_CHANGE is 1 or not present, the time domain waveform of the RL-SIG field, transmitted on frequency segment i_{Seg} and transmit chain i_{TX}, shall be as given by Equation (27-14). $$r_{\text{RL-SIG}}^{(i_{Seg}, i_{TX})}(t) = \frac{1}{\sqrt{N_{TX} \cdot N_{\text{RL-SIG}}^{\text{Tone}} \cdot \frac{\lvert\Omega_{20\text{MHz}}\rvert}{N_{20\text{MHz}}}}} w_{T_{\text{RL-SIG}}}(t) \sum_{i_{BW} \in \Omega_{20\text{MHz}}} \sum_{k=-28}^{28} \left(\begin{array}{l} \Upsilon_{(k - K_{\text{Shift}}(i_{BW})), \text{BW}} \eta_{\text{L-SIG}, k}(D_{k,20} + p_1 P_k) \\ \cdot \exp(j2\pi(k - K_{\text{Shift}}(i_{\text{BW}}))\Delta_{F, \text{Pre-HE}}(t - T_{GI, \text{Pre-HE}} - T_{CS}^{i_{TX}})) \end{array} \right) \quad (27\text{-}14)$$ If the TXVECTOR parameter BEAM_CHANGE is 0, the time domain waveform of the RL-SIG field, transmitted on frequency segment i_{Seg} and transmit chain i_{TX}, shall be as given by Equation (27-15). $$r_{\text{RL-SIG}}^{(i_{Seg}, i_{TX})}(t) = \frac{1}{\sqrt{N_{STS} \cdot N_{\text{RL-SIG}}^{\text{Tone}} \cdot \frac{\lvert\Omega_{20\text{MHz}}\rvert}{N_{20\text{MHz}}}}} w_{T_{\text{RL-SIG}}}(t) \sum_{i_{BW}=0}^{N_{20\text{MHz}}-1} \sum_{k=-28}^{28} \sum_{m=1}^{N_{STS}} \left(\begin{array}{l} \left[Q_{4(k - K_{\text{Shift}}(i_{BW}))}^{(i_{Seg})} \right]_{i_{TX}, m} \left[A_{\text{HE-LTF}}^{4(k - K_{\text{Shift}}(i_{BW}))} \right]_{m,1} \eta_{\text{L-SIG}, k}(D_{k,20} + p_1 P_k) \\ \cdot \exp(j2\pi(k - K_{\text{Shift}}(i_{\text{BW}}))\Delta_{F, \text{Pre-HE}}(t - T_{GI, \text{Pre-HE}} - T_{CS, \text{HE}}(m))) \end{array} \right) \quad (27\text{-}15)$$ where p_1 is the second pilot value in the sequence defined in 17.3.5.10 other variables are defined after Equation (27-1), Equation (27-3), Equation (27-4), Equation (27-6), Equation (27-8), and Equation (27-12)

[13] IEEE Std 802.11ax-2021, Sec. 27.3.11.6.

Claim 1	Wi-Fi 6 Accused Instrumentalities
	It is anticipated that discovery will provide further details of the manner of infringement of the Accused Instrumentalities. In addition, the foregoing structures may be implemented in alternative configurations and usages that are equivalent to this claim element. In addition, the foregoing structures may be implemented in alternative configurations and usages that are equivalent to this claim element because they perform substantially the same function of receiving a wireless packet through a communication channel, formats of the wireless packet including a first packet format and a second packet format, the first packet format comprising a first header field carried by a first orthogonal frequency division multiplexing (OFDM) symbol, the second packet format comprising both the first header field carried by the first OFDM symbol and a second header field carried by a second OFDM symbol which follows the first OFDM symbol, and the second header field being a repetition of the first header field, in substantially the same way of receiving a wireless packet through a communication channel, formats of the wireless packet including a first packet format and a second packet format, the first packet format comprising a first header field carried by a first orthogonal frequency division multiplexing (OFDM) symbol, the second packet format comprising both the first header field carried by the first OFDM symbol and a second header field carried by a second OFDM symbol which follows the first OFDM symbol, and the second header field being a repetition of the first header field, to obtain the same result of providing additional diversity, reducing data loss and increasing decoding accuracy. For example, alternative equivalent configurations include the following, separately or in conjunction, which achieve the same functionalities provided by the claimed configurations: alternative configurations of HE PHY and PPDUs, including HE SU PPDU, HE MU PPDU, HE ER SU PPDU and HE TB PPDU; alternative configurations of the packet types or formats, headers fields, parts and bits, including HE-SIG-A, HE-SIG-A1, HE-SIG-A2, HE-SIG-A1-R, HE-SIG-A2-R, HE-SIG-B, HE-STF, HE-LTF, L-STF, L-LTF, L-SIG, RL-SIG and PE; alternative configurations of frequency and channel bands and bandwidth divisions, subdivisions, subchannels and subcarriers; alternative configurations of the HE STA, pre-HE [de]modulated and HE [de]modulated fields, transmitter, receiver, encoder, decoder, modulator and demodulator, and alternative symbols and symbol configuration, in transmitting, receiving, encoding, modulating or generating, including for alternative configurations for SU and/or MU.

Appendix E
Claim Chart for U.S. Patent No. 11,212,146

Claim 1	Wi-Fi 6 Accused Instrumentalities
a demodulator configured to demodulate the received wireless packet,	The Accused Instrumentalities comprise a demodulator configured to demodulate the received wireless packet. For example, Wi-Fi 6 devices comprise a demodulator configured to demodulate the received wireless packet. This is indicated below:[14] **27.3 HE PHY** **27.3.1 Introduction** Subclause 27.3 provides the procedure by which PSDUs are converted to and from transmissions on the wireless medium. During transmission, a PSDU (in the SU case) or one or more PSDUs (in the MU case) are processed (i.e., scrambled and coded) and appended to the PHY preamble to create the PPDU. At the receiver, the PHY preamble is processed to aid in the detection, demodulation, and delivery of the PSDU. **17.3 OFDM PHY** **17.3.1 Introduction** Subclause 17.3 provides a convergence procedure in which PSDUs are converted to and from PPDUs. During transmission, the PSDU shall be provided with a PHY preamble and header to create the PPDU. At the receiver, the PHY preamble and header are processed to aid in demodulation and delivery of the PSDU.

[14] IEEE Std 802.11ax-2021, Sec. 27.3.1; IEEE Std 802.11-2020, Sec. 17.3; 19.3; 21.3; 27.3.1.

Claim 1	Wi-Fi 6 Accused Instrumentalities
	17.3.12 Receive PHY The receive PHY is shown in Figure 17-19. In order to receive data, the PHY-TXSTART.request primitive shall be disabled so that the PHY entity is in the receive state. Further, through STA management (via the PLME) the PHY is set to the appropriate frequency. Other receive parameters, such as RSSI, RCPI, and indicated DATARATE, may be accessed via the PHY SAP. **19.3 HT PHY** **19.3.1 Introduction** Subclause 19.3 provides a procedure in which PSDUs are converted to and from PPDUs. During transmission, the PSDU is processed (i.e., scrambled and coded) and appended to the PHY preamble to create the PPDU. At the receiver, the PHY preamble is processed to aid in demodulation and delivery of the PSDU. **21.3.1 Introduction** This subclause provides the procedure by which PSDUs are converted to and from transmissions on the wireless medium. During transmission, a PSDU (in the SU case) or one or more PSDUs (in the MU case) are processed (i.e., scrambled and coded) and appended to the PHY preamble to create the PPDU. At the receiver, the PHY preamble is processed to aid in the detection, demodulation, and delivery of the PSDU. Pre-VHT modulated fields refer to the L-STF, L-LTF, L-SIG, and VHT-SIG-A fields, while VHT modulated fields refer to the VHT-STF, VHT-LTF, VHT-SIG-B, and Data fields (see Figure 21-17). It is anticipated that discovery will provide further details of the manner of infringement of the Accused Instrumentalities.

Claim 1	Wi-Fi 6 Accused Instrumentalities
	In addition, the foregoing structures may be implemented in alternative configurations and usages that are equivalent to this claim element. In addition, the foregoing structures may be implemented in alternative configurations and usages that are equivalent to this claim element because they perform substantially the same function of demodulating the received wireless packet, in substantially the same way of demodulating the received wireless packet, to obtain the same result of providing additional diversity, reducing data loss and increasing decoding accuracy. For example, alternative equivalent configurations include the following, separately or in conjunction, which achieve the same functionalities provided by the claimed configurations: alternative configurations of HE PHY and PPDUs, including HE SU PPDU, HE MU PPDU, HE ER SU PPDU and HE TB PPDU; alternative configurations of the packet types or formats, headers fields, parts and bits, including HE-SIG-A, HE-SIG-A1, HE-SIG-A2, HE-SIG-A1-R, HE-SIG-A2-R, HE-SIG-B, HE-STF, HE-LTF, L-STF, L-LTF, L-SIG, RL-SIG and PE; alternative configurations of frequency and channel bands and bandwidth divisions, subdivisions, subchannels and subcarriers; alternative configurations of the HE STA, pre-HE [de]modulated and HE [de]modulated fields, transmitter, receiver, encoder, decoder, modulator and demodulator, and alternative symbols and symbol configuration, in transmitting, receiving, encoding, modulating or generating, including for alternative configurations for SU and/or MU.
wherein the wireless receiver distinguishes the second packet format from the first packet format by detecting, from the received wireless packet, the second header field which repeats the first header field.	The Accused Instrumentalities comprise wherein the wireless receiver distinguishes the second packet format from the first packet format by detecting, from the received wireless packet, the second header field which repeats the first header field. For example, in the Wi-Fi 6 devices, the wireless receiver distinguishes the second packet format from the first packet format by detecting, from the received wireless packet, the second header field which repeats the first header field. This is indicated below:[15]

[15] IEEE Std 802.11ax-2021, Sec. 27.3.11.6.

Claim 1	Wi-Fi 6 Accused Instrumentalities
	27.3.11.6 RL-SIG field The RL-SIG field is a repeat of the L-SIG field and is used to differentiate an HE PPDU from a non-HT PPDU, HT PPDU, and VHT PPDU. See also:[16] A typical state machine implementation of the receive PHY is given in Figure 27-63. 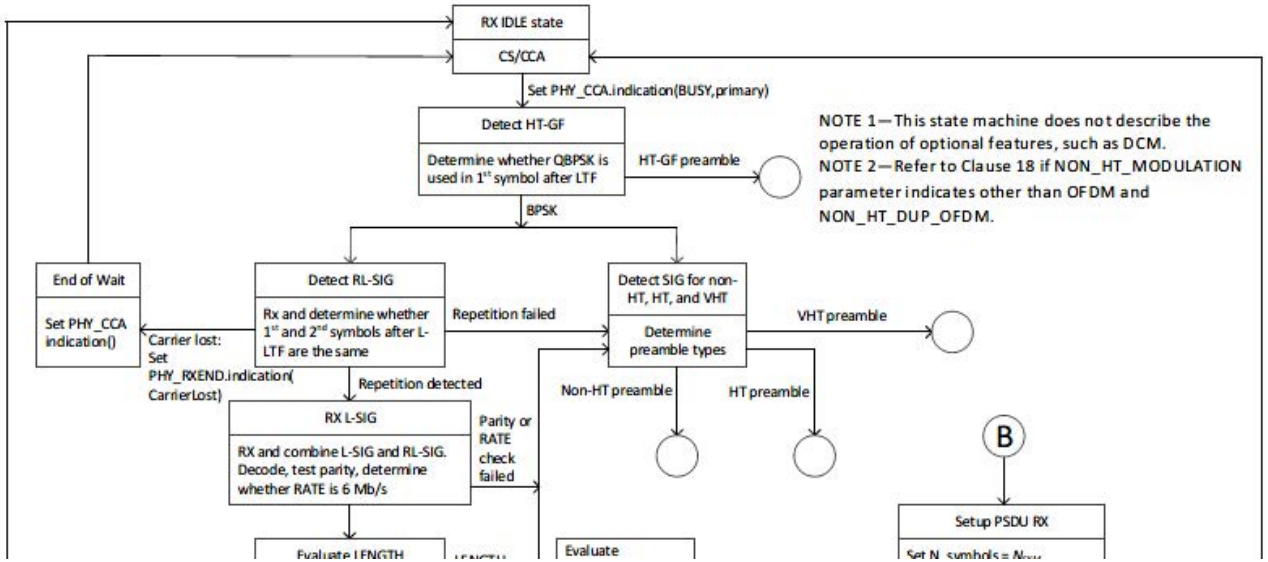 	

[16] IEEE Std 802.11ax-2021, Fig. 27-63.

Claim 1	Wi-Fi 6 Accused Instrumentalities
	See also:[17] After the PHY-CCA.indication(BUSY, channel-list) primitive is issued, the PHY entity shall begin receiving the training symbols and searching for the preambles for non-HT, HT, VHT, and HE PPDUs, respectively. If the constellation used in the first symbol after the first long training field is QBPSK, the PHY entity shall continue to detect the received signal using the receive procedure for HT-GF depicted in Clause 19. Otherwise, for detecting the HE preamble, the PHY entity shall search for L-SIG and RL-SIG fields in order to set the maximum duration of the data stream. If an RL-SIG field is detected, the PHY entity should check the parity bit and RATE fields in the L-SIG and RL-SIG fields. If either the check of the parity bit is invalid or the RATE field is not set to 6 Mb/s in non-HT, a PHY-RXSTART.indication primitive is not issued. If the check of the parity bit is valid and the RATE field indicates 6 Mb/s in non-HT but the LENGTH field value in the L-SIG field is a multiple of 3, a PHY-RXSTART.indication primitive is not issued. In both cases, the PHY should continue to detect the received signal using non-HT, HT, and VHT receive procedure in Clause 17, Clause 19, and Clause 21, respectively. If a valid parity bit and the RATE with 6 Mb/s in non-HT are indicated in the L-SIG and RL-SIG fields and the LENGTH field value in the L-SIG and RL-SIG fields meets the condition that the remainder is 1 after LENGTH divided by 3, the PHY entity should begin receiving the sequence of HE-SIG-A, HE-STF, and HE-LTF fields for the HE SU PPDU and HE TB PPDU as shown in Figure 27-59 and Figure 27-62, respectively. After the RL-SIG field, the PHY entity shall receive two symbols of the HE-SIG-A field immediately followed by HE-STF.

[17] IEEE Std 802.11ax-2021, at p. 655.

Claim 1	Wi-Fi 6 Accused Instrumentalities
	It is anticipated that discovery will provide further details of the manner of infringement of the Accused Instrumentalities. In addition, the foregoing structures may be implemented in alternative configurations and usages that are equivalent to this claim element. In addition, the foregoing structures may be implemented in alternative configurations and usages that are equivalent to this claim element because they perform substantially the same function of distinguishing the second packet format from the first packet format by detecting, from the received wireless packet, the second header field which repeats the first header field, in substantially the same way of distinguishing the second packet format from the first packet format by detecting, from the received wireless packet, the second header field which repeats the first header field, to obtain the same result of providing additional diversity, reducing data loss and increasing decoding accuracy. For example, alternative equivalent configurations include the following, separately or in conjunction, which achieve the same functionalities provided by the claimed configurations: alternative configurations of HE PHY and PPDUs, including HE SU PPDU, HE MU PPDU, HE ER SU PPDU and HE TB PPDU; alternative configurations of the packet types or formats, headers fields, parts and bits, including HE-SIG-A, HE-SIG-A1, HE-SIG-A2, HE-SIG-A1-R, HE-SIG-A2-R, HE-SIG-B, HE-STF, HE-LTF, L-STF, L-LTF, L-SIG, RL-SIG and PE; alternative configurations of frequency and channel bands and bandwidth divisions, subdivisions, subchannels and subcarriers; alternative configurations of the HE STA, pre-HE [de]modulated and HE [de]modulated fields, transmitter, receiver, encoder, decoder, modulator and demodulator, and alternative symbols and symbol configuration, in transmitting, receiving, encoding, modulating or generating, including for alternative configurations for SU and/or MU.

Claim 2	Wi-Fi 6 Accused Instrumentalities
The wireless communication device of claim 1, wherein the wireless receiver determines the received wireless packet as the second packet format when the second header field is detected from the wireless packet.	The Accused Instrumentalities comprise a wireless communication device wherein the wireless receiver determines the received wireless packet as the second packet format when the second header field is detected from the wireless packet. For example, Wi-Fi 6 devices comprise a wireless receiver that determines the received wireless packet as the second packet format when the second header field is detected from the wireless packet. This is indicated below:[18] **27.3.22 HE receive procedure** A typical state machine implementation of the receive PHY is given in Figure 27-63. 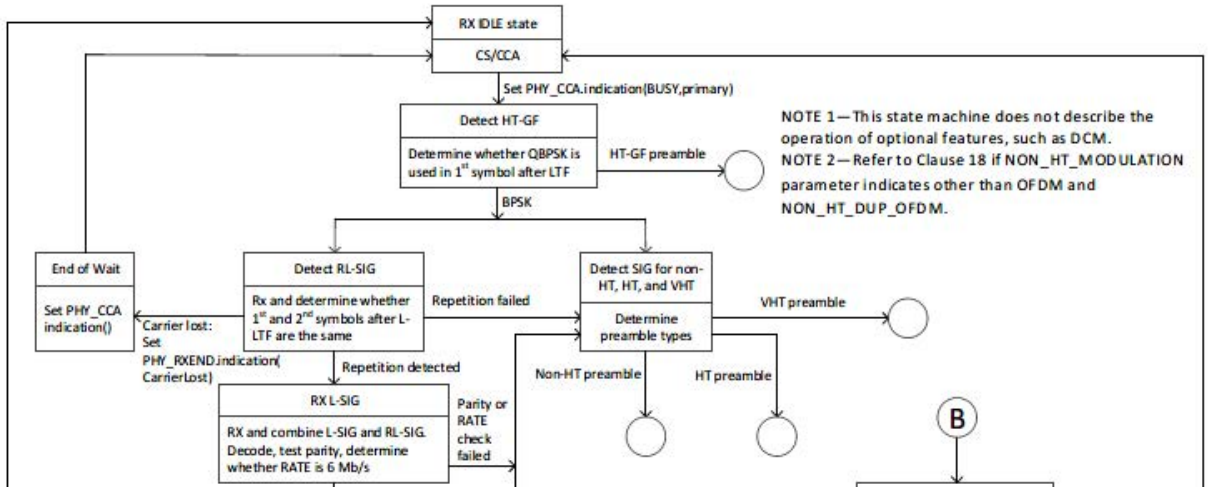 **Figure 27-63—PHY receive state machine if midambles are not present**

[18] IEEE Std 802.11ax-2021, Sec. 27.3.22.

Claim 2	Wi-Fi 6 Accused Instrumentalities
	It is anticipated that discovery will provide further details of the manner of infringement of the Accused Instrumentalities. In addition, the foregoing structures may be implemented in alternative configurations and usages that are equivalent to this claim element. In addition, the foregoing structures may be implemented in alternative configurations and usages that are equivalent to this claim element because they perform substantially the same function of determining the received wireless packet as the second packet format when the second header field is detected from the wireless packet, in substantially the same way of determining the received wireless packet as the second packet format when the second header field is detected from the wireless packet, to obtain the same result of providing additional diversity, reducing data loss and increasing decoding accuracy. For example, alternative equivalent configurations include the following, separately or in conjunction, which achieve the same functionalities provided by the claimed configurations: alternative configurations of HE PHY and PPDUs, including HE SU PPDU, HE MU PPDU, HE ER SU PPDU and HE TB PPDU; alternative configurations of the packet types or formats, headers fields, parts and bits, including HE-SIG-A, HE-SIG-A1, HE-SIG-A2, HE-SIG-A1-R, HE-SIG-A2-R, HE-SIG-B, HE-STF, HE-LTF, L-STF, L-LTF, L-SIG, RL-SIG and PE; alternative configurations of frequency and channel bands and bandwidth divisions, subdivisions, subchannels and subcarriers; alternative configurations of the HE STA, pre-HE [de]modulated and HE [de]modulated fields, transmitter, receiver, encoder, decoder, modulator and demodulator, and alternative symbols and symbol configuration, in transmitting, receiving, encoding, modulating or generating, including for alternative configurations for SU and/or MU.

Claim 3	Wi-Fi 6 Accused Instrumentalities
The wireless communication device of claim 1, wherein the wireless receiver determines the received wireless packet as the first packet format when the second header field is not detected from the wireless packet.	The Accused Instrumentalities comprise a wireless communication device wherein the wireless receiver determines the received wireless packet as the first packet format when the second header field is not detected from the wireless packet. For example, Wi-Fi 6 devices comprise the wireless receiver determines the received wireless packet as the first packet format when the second header field is not detected from the wireless packet. This is indicated below:[19] **27.3.22 HE receive procedure** A typical state machine implementation of the receive PHY is given in Figure 27-63. 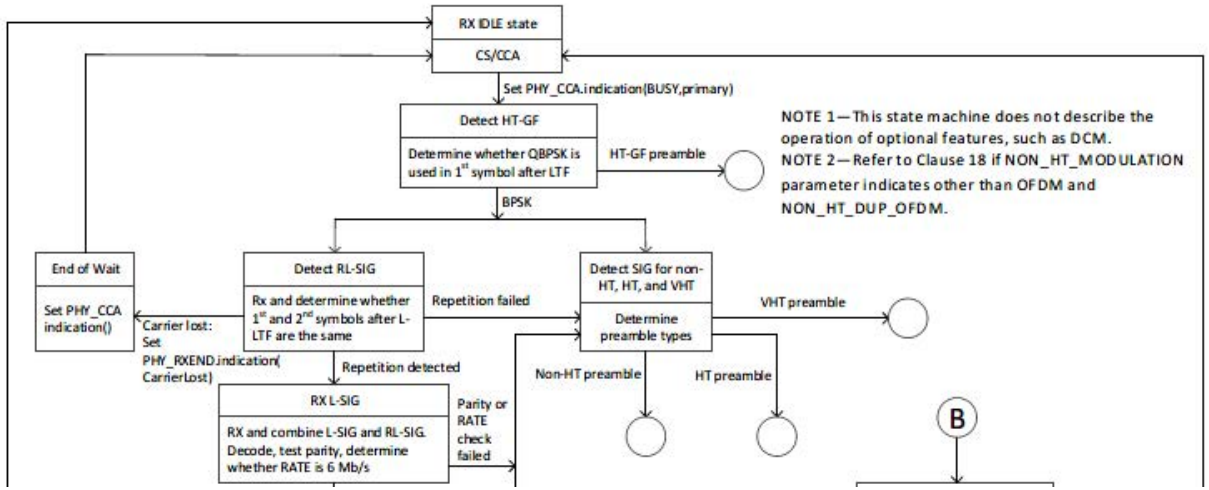 **Figure 27-63—PHY receive state machine if midambles are not present**

[19] IEEE Std 802.11ax-2021, Sec. 27.3.22.

Claim 3	Wi-Fi 6 Accused Instrumentalities
	It is anticipated that discovery will provide further details of the manner of infringement of the Accused Instrumentalities. In addition, the foregoing structures may be implemented in alternative configurations and usages that are equivalent to this claim element. In addition, the foregoing structures may be implemented in alternative configurations and usages that are equivalent to this claim element because they perform substantially the same function of determining the received wireless packet as the first packet format when the second header field is not detected from the wireless packet, in substantially the same way of determining the received wireless packet as the first packet format when the second header field is not detected from the wireless packet, to obtain the same result of providing additional diversity, reducing data loss and increasing decoding accuracy. For example, alternative equivalent configurations include the following, separately or in conjunction, which achieve the same functionalities provided by the claimed configurations: alternative configurations of HE PHY and PPDUs, including HE SU PPDU, HE MU PPDU, HE ER SU PPDU and HE TB PPDU; alternative configurations of the packet types or formats, headers fields, parts and bits, including HE-SIG-A, HE-SIG-A1, HE-SIG-A2, HE-SIG-A1-R, HE-SIG-A2-R, HE-SIG-B, HE-STF, HE-LTF, L-STF, L-LTF, L-SIG, RL-SIG and PE; alternative configurations of frequency and channel bands and bandwidth divisions, subdivisions, subchannels and subcarriers; alternative configurations of the HE STA, pre-HE [de]modulated and HE [de]modulated fields, transmitter, receiver, encoder, decoder, modulator and demodulator, and alternative symbols and symbol configuration, in transmitting, receiving, encoding, modulating or generating, including for alternative configurations for SU and/or MU.

Appendix E
Claim Chart for U.S. Patent No. 11,212,146

Claim 4	Wi-Fi 6 Accused Instrumentalities
The wireless communication device of claim 1, wherein the first and second header fields contain information for decoding the wireless packet.	The Accused Instrumentalities comprise a wireless communication device wherein the first and second header fields contain information for decoding the wireless packet. For example, Wi-Fi 6 devices comprise the first and second header fields contain information for decoding the wireless packet. This is indicated below:[20] **27.3.11.5 L-SIG field** The L-SIG field is used to communicate rate and length information. The structure of the L-SIG field is defined in Figure 17-5. In an HE PPDU, the RATE field shall be set to the value representing 6 Mb/s in the "Rate (20 MHz channel spacing)" column of Table 17-6. In a non-HT duplicate PPDU, the RATE field is defined in 17.3.4.2 using the L_DATARATE parameter in the TXVECTOR. For an HE TB PPDU, the LENGTH field is set to the TXVECTOR parameter L_LENGTH. For an HE SU PPDU, HE ER SU PPDU, and HE MU PPDU, the LENGTH field is set to the value given by the Equation (27-11). $$\text{Length} = \left\lceil \frac{\text{TXTIME} - \mathit{SignalExtension} - 20}{4} \right\rceil \times 3 - 3 - m \qquad (27\text{-}11)$$ where TXTIME — is defined in 27.4.3 (in µs) *m* — is 1 for an HE MU PPDU and HE ER SU PPDU and 2 otherwise *SignalExtension* — is 0 µs if the TXVECTOR parameter NO_SIG_EXTN is true and is aSignalExtension as defined in Table 27-54 if the TXVECTOR parameter NO_SIG_EXTN is false

[20] IEEE Std 802.11ax-2021, Sec. 27.3.11.5-6.

Claim 4	Wi-Fi 6 Accused Instrumentalities
	27.3.11.6 RL-SIG field The RL-SIG field is a repeat of the L-SIG field and is used to differentiate an HE PPDU from a non-HT PPDU, HT PPDU, and VHT PPDU. It is anticipated that discovery will provide further details of the manner of infringement of the Accused Instrumentalities. In addition, the foregoing structures may be implemented in alternative configurations and usages that are equivalent to this claim element. In addition, the foregoing structures may be implemented in alternative configurations and usages that are equivalent to this claim element because they perform substantially the same function of decoding the wireless packet using information in the first and second header fields, in substantially the same way of decoding the wireless packet using information in the first and second header fields, to obtain the same result of providing additional diversity, reducing data loss and increasing decoding accuracy. For example, alternative equivalent configurations include the following, separately or in conjunction, which achieve the same functionalities provided by the claimed configurations: alternative configurations of HE PHY and PPDUs, including HE SU PPDU, HE MU PPDU, HE ER SU PPDU and HE TB PPDU; alternative configurations of the packet types or formats, headers fields, parts and bits, including HE-SIG-A, HE-SIG-A1, HE-SIG-A2, HE-SIG-A1-R, HE-SIG-A2-R, HE-SIG-B, HE-STF, HE-LTF, L-STF, L-LTF, L-SIG, RL-SIG and PE; alternative configurations of frequency and channel bands and bandwidth divisions, subdivisions, subchannels and subcarriers; alternative configurations of the HE STA, pre-HE [de]modulated and HE [de]modulated fields, transmitter, receiver, encoder, decoder, modulator and demodulator, and alternative symbols and symbol configuration, in transmitting, receiving, encoding, modulating or generating, including for alternative configurations for SU and/or MU.

Appendix E
Claim Chart for U.S. Patent No. 11,212,146

Claim 5	Wi-Fi 6 Accused Instrumentalities
The wireless communication device of claim 1, wherein the first and second header fields contain information related to a length of the wireless packet.	The Accused Instrumentalities comprise a wireless communication device wherein the first and second header fields contain information related to a length of the wireless packet. For example, Wi-Fi 6 devices comprise the first and second header fields contain information related to a length of the wireless packet. This is indicated below:[21] **27.3.11.5 L-SIG field** The L-SIG field is used to communicate rate and length information. The structure of the L-SIG field is defined in Figure 17-5. In an HE PPDU, the RATE field shall be set to the value representing 6 Mb/s in the "Rate (20 MHz channel spacing)" column of Table 17-6. In a non-HT duplicate PPDU, the RATE field is defined in 17.3.4.2 using the L_DATARATE parameter in the TXVECTOR. For an HE TB PPDU, the LENGTH field is set to the TXVECTOR parameter L_LENGTH. For an HE SU PPDU, HE ER SU PPDU, and HE MU PPDU, the LENGTH field is set to the value given by the Equation (27-11). $$\text{Length} = \left\lceil \frac{\text{TXTIME} - \mathit{SignalExtension} - 20}{4} \right\rceil \times 3 - 3 - m \qquad (27\text{-}11)$$ where TXTIME — is defined in 27.4.3 (in µs) *m* — is 1 for an HE MU PPDU and HE ER SU PPDU and 2 otherwise *SignalExtension* — is 0 µs if the TXVECTOR parameter NO_SIG_EXTN is true and is aSignalExtension as defined in Table 27-54 if the TXVECTOR parameter NO_SIG_EXTN is false

[21] IEEE Std 802.11ax-2021, Sec. 27.3.11.5-6.

Claim 5	Wi-Fi 6 Accused Instrumentalities
	27.3.11.6 RL-SIG field The RL-SIG field is a repeat of the L-SIG field and is used to differentiate an HE PPDU from a non-HT PPDU, HT PPDU, and VHT PPDU. It is anticipated that discovery will provide further details of the manner of infringement of the Accused Instrumentalities. In addition, the foregoing structures may be implemented in alternative configurations and usages that are equivalent to this claim element. In addition, the foregoing structures may be implemented in alternative configurations and usages that are equivalent to this claim element because they perform substantially the same function of containing information related to a length of the wireless packet in the first and second header fields, in substantially the same way of containing information related to a length of the wireless packet in the first and second header fields, to obtain the same result of providing additional diversity, reducing data loss and increasing decoding accuracy. For example, alternative equivalent configurations include the following, separately or in conjunction, which achieve the same functionalities provided by the claimed configurations: alternative configurations of HE PHY and PPDUs, including HE SU PPDU, HE MU PPDU, HE ER SU PPDU and HE TB PPDU; alternative configurations of the packet types or formats, headers fields, parts and bits, including HE-SIG-A, HE-SIG-A1, HE-SIG-A2, HE-SIG-A1-R, HE-SIG-A2-R, HE-SIG-B, HE-STF, HE-LTF, L-STF, L-LTF, L-SIG, RL-SIG and PE; alternative configurations of frequency and channel bands and bandwidth divisions, subdivisions, subchannels and subcarriers; alternative configurations of the HE STA, pre-HE [de]modulated and HE [de]modulated fields, transmitter, receiver, encoder, decoder, modulator and demodulator, and alternative symbols and symbol configuration, in transmitting, receiving, encoding, modulating or generating, including for alternative configurations for SU and/or MU.

Appendix E
Claim Chart for U.S. Patent No. 11,212,146

Claim 6	Wi-Fi 6 Accused Instrumentalities
A wireless communication method, comprising:	The Accused Instrumentalities comprise a wireless communication method as described in the Wi-Fi 6 Standard:[22] 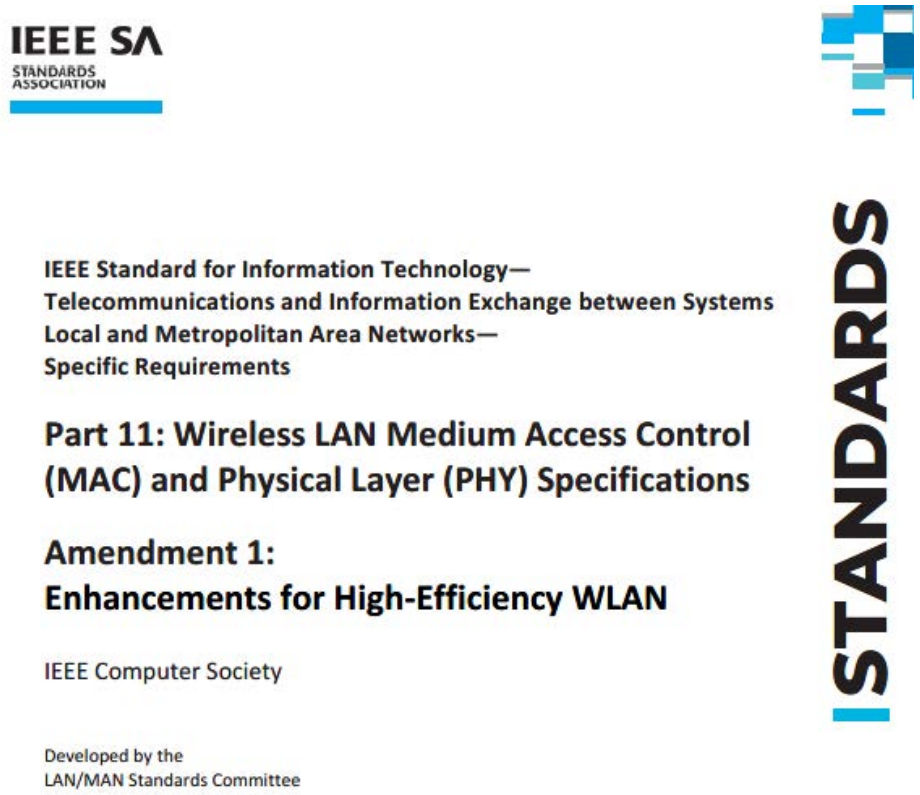 IEEE SA STANDARDS ASSOCIATION IEEE Standard for Information Technology— Telecommunications and Information Exchange between Systems Local and Metropolitan Area Networks— Specific Requirements Part 11: Wireless LAN Medium Access Control (MAC) and Physical Layer (PHY) Specifications Amendment 1: Enhancements for High-Efficiency WLAN IEEE Computer Society Developed by the LAN/MAN Standards Committee STANDARDS

[22] IEEE Std 802.11ax-2021, amendment to IEEE Std 802.11-2020 (cover).

Appendix E
Claim Chart for U.S. Patent No. 11,212,146

Claim 6	Wi-Fi 6 Accused Instrumentalities
receiving a wireless packet through a communication channel, formats of the wireless packet including a first packet format and a second packet format,	The Accused Instrumentalities comprising receiving a wireless packet through a communication channel, formats of the wireless packet including a first packet format and a second packet format. See claim 1 ("a wireless receiver configured to receive a wireless packet through a communication channel, formats of the wireless packet including a first packet format and a second packet format…").
the first packet format comprising a first header field carried by a first orthogonal frequency division multiplexing (OFDM) symbol,	The Accused Instrumentalities comprise the first packet format comprising a first header field carried by a first orthogonal frequency division multiplexing (OFDM) symbol. See claim 1 ("..the first packet format comprising a first header field carried by a first orthogonal frequency division multiplexing (OFDM) symbol…").
the second packet format comprising both the first header field carried by the first OFDM symbol and a second header field carried by a second OFDM symbol which follows the first OFDM symbol, and	The Accused Instrumentalities comprise wherein the second packet format comprising both the first header field carried by the first OFDM symbol and a second header field carried by a second OFDM symbol which follows the first OFDM symbol. See claim 1 ("…the second packet format comprising both the first header field carried by the first OFDM symbol and a second header field carried by a second OFDM symbol which follows the first OFDM symbol…").
the second header field being a repetition of the first header field; and	The Accused Instrumentalities comprise wherein the second header field being a repetition of the first header field. See claim 1 ("…and the second header field being a repetition of the first header field").
demodulating the received wireless packet,	The Accused Instrumentalities comprise demodulate the received wireless packet. See claim 1 ("a demodulator configured to demodulate the received wireless packet").

Appendix E
Claim Chart for U.S. Patent No. 11,212,146

Claim 6	Wi-Fi 6 Accused Instrumentalities
wherein the second packet format is distinguished from the first packet format by detecting, from the received wireless packet, the second header field which repeats the first header field.	The Accused Instrumentalities comprise wherein the second packet format is distinguished from the first packet format by detecting, from the received wireless packet, the second header field which repeats the first header field. See claim 1 ("wherein the wireless receiver distinguishes the second packet format from the first packet format by detecting, from the received wireless packet, the second header field which repeats the first header field").

Appendix E
Claim Chart for U.S. Patent No. 11,212,146

Claim 7	Wi-Fi 6 Accused Instrumentalities
The wireless communication method of claim 6, wherein the received wireless packet is determined as the second packet format when the second header field is detected from the wireless packet.	The Accused Instrumentalities comprise wherein the received wireless packet is determined as the second packet format when the second header field is detected from the wireless packet. See claim 2.

Appendix E
Claim Chart for U.S. Patent No. 11,212,146

Claim 8	Wi-Fi 6 Accused Instrumentalities
The wireless communication method of claim 6, wherein the received wireless packet is determined as the first packet format when the second header field is not detected from the wireless packet.	The Accused Instrumentalities comprise wherein the received wireless packet is determined as the first packet format when the second header field is not detected from the wireless packet. See claim 3.

Appendix E
Claim Chart for U.S. Patent No. 11,212,146

Claim 9	Wi-Fi 6 Accused Instrumentalities
The wireless communication method of claim 6, wherein the first and second header fields contain information for decoding the wireless packet.	The Accused Instrumentalities comprise wherein the first and second header fields contain information for decoding the wireless packet. See claim 4.

Appendix E
Claim Chart for U.S. Patent No. 11,212,146

Claim 10	Wi-Fi 6 Accused Instrumentalities
The wireless communication method of claim 6, wherein the first and second header fields contain information related to a length of the wireless packet.	The Accused Instrumentalities comprise wherein the first and second header fields contain information related to a length of the wireless packet. See claim 5.

Appendix H
Claim Chart for U.S. Patent No. 10,291,449

Claim 1	Wi-Fi 6 Accused Instrumentalities
A wireless OFDM (Orthogonal Frequency Division Multiplexing) transceiver comprising:	The Accused Instrumentalities comprise a wireless OFDM (Orthogonal Frequency Division Multiplexing) transceiver that comprises the following technical elements and limitations, as described in the Wi-Fi 6 Standard. For example, devices that comply with the IEEE 802.11ax standard ("Wi-Fi 6") comprise a wireless OFDM (Orthogonal Frequency Division Multiplexing) transceiver. The citations herein to the Wi-Fi 6 standard are further illustrative of the technical specifications implemented in and/or embodied by the Accused Instrumentalities and applicable whether or not the Accused Instrumentalities are standard compliant. For example, Wi-Fi 6 devices comprise a wireless OFDM transceiver that is capable of transmitting and receiving ("transceiving") physical layer protocol data units (PPDUs). This is indicated below:[1]

[1] IEEE Std 802.11ax-2021, Sec. 27.1.1.

Appendix H
Claim Chart for U.S. Patent No. 10,291,449

Claim 1	Wi-Fi 6 Accused Instrumentalities
	27. High-efficiency (HE) PHY specification **27.1 Introduction** **27.1.1 Introduction to the HE PHY** Clause 27 specifies the PHY entity for a high-efficiency (HE) orthogonal frequency division multiplexing (OFDM) system. In addition to the requirements in Clause 27, an HE STA shall be capable of transmitting and receiving PPDUs that are compliant with the mandatory requirements of the following PHY specifications: — Clause 19 and Clause 21 if the HE STA supports an operating channel width greater than or equal to 80 MHz and is operating in the 5 GHz band. — Clause 19 and Clause 21 transmission and reception on 20 MHz channel width (see 26.17.1) if the HE STA is a 20 MHz-only non-AP HE STA and is operating in the 5 GHz band. — Clause 19 if the HE STA is operating in the 2.4 GHz band. — Clause 17 if the HE STA is operating in the 6 GHz band. It is anticipated that discovery will provide further details of the manner of infringement of the Accused Instrumentalities. Upon information and belief, AX Wireless contends that these infringement contentions are equally applicable to all examples, aspects, applications, configurations, embodiments and instances of Defendants' Wi-Fi 6 devices.
a wireless OFDM communications transmitter operable to generate a first packet type for transmission in a first channel bandwidth, the first packet type	The Accused Instrumentalities comprise a wireless OFDM communications transmitter operable to generate a first packet type for transmission in a first channel bandwidth, the first packet type comprising a first header field, wherein the first header field comprises two parts, a first part comprising a first set of header bits of the first header field and a second part comprising a second set of header bits of the first header field, wherein the first set of header bits of the first header field is different than the second set of header bits of the first header field.

Appendix H
Claim Chart for U.S. Patent No. 10,291,449

Claim 1	Wi-Fi 6 Accused Instrumentalities
comprising a first header field, wherein the first header field comprises two parts, a first part comprising a first set of header bits of the first header field and a second part comprising a second set of header bits of the first header field, wherein the first set of header bits of the first header field is different than the second set of header bits of the first header field; and	For example, Wi-Fi 6 devices comprise a wireless OFDM communications transmitter operable to generate a first packet type comprising a first header field, wherein the first header field comprises two parts, a first part comprising a first set of header bits of the first header field and a second part comprising a second set of header bits of the first header field, wherein the first set of header bits of the first header field is different than the second set of header bits of the first header field. Wi-Fi 6 devices comprise a wireless OFDM communications transmitter operable to generate a first packet type comprising a first header field. For example, Wi-Fi 6 devices comprise a high-efficiency (HE) station (STA) that can transmit the high-efficiency single user physical layer protocol data unit (HE SU PPDU) format, among other PPDU formats:[2] The HE PHY provides support for midambles. Midambles facilitate updating of the channel estimate during HE PPDU reception and might be of use in high mobility scenarios that often result in significant variations of the wireless channel over the duration of a PPDU. An HE STA shall support the following features: — Transmission and reception of an HE SU PPDU that consists of a single RU spanning the entire PPDU bandwidth. See also:[3] **high-efficiency (HE) single-user (SU) physical layer (PHY) protocol data unit (PPDU) (HE SU PPDU):** A PPDU transmitted with HE SU PPDU format. This PPDU carries a single PHY service data unit (PSDU). The first packet type is for transmission in a first channel bandwidth. For example, the HE SU PPDU is for transmission in a first channel bandwidth. This is indicated below:[4]

[2] IEEE Std 802.11ax-2021, Sec. 27.1.1.

[3] IEEE Std 802.11ax-2021, Sec. 3.2.

[4] IEEE Std 802.11ax-2021, Sec. 27.3.11.7.2.

Claim 1	Wi-Fi 6 Accused Instrumentalities
	Table 27-18—HE-SIG-A field of an HE SU PPDU and HE ER SU PPDU *(continued)*

Bit	Field	Number of bits	Description
B14	Reserved	1	Reserved and set to 1.
B15–B18	Spatial Reuse	4	Indicates whether spatial reuse modes are allowed during the transmission of this PPDU: Set to a value from Table 27-22 (see 26.11.6 and 26.10).
B19–B20	Bandwidth	2	For an HE SU PPDU: Set to 0 for 20 MHz. Set to 1 for 40 MHz. Set to 2 for 80 MHz. Set to 3 for 160 MHz and 80+80 MHz. For an HE ER SU PPDU: Set to 0 for 242-tone RU. Set to 1 for upper frequency 106-tone RU within the primary 20 MHz. Values 2 and 3 are reserved.

The HE SU PPDU is a first packet type comprising a first header field. For example, the HE SU PPDU comprises the HE-SIG-A field. This is indicated below:[5]

[5] IEEE Std 802.11ax-2021, Sec. 27.3.4.

Claim 1	Wi-Fi 6 Accused Instrumentalities
	27.3.4 HE PPDU formats Four HE PPDU formats are defined: HE SU PPDU, HE MU PPDU, HE ER SU PPDU, and HE TB PPDU. The HE sounding NDP is a variant of the HE SU PPDU and defined in 27.3.17. The HE TB feedback NDP is a variant of the HE TB PPDU and defined in 27.3.18. NOTE—The HE ER SU PPDU is not a variant of the HE SU PPDU. Requirements related to HE SU PPDUs and HE ER SU PPDUs are specified separately. The format of the HE SU PPDU is defined as in Figure 27-8. This PPDU format is used for SU transmission, and in this format, the HE-SIG-A field is not repeated. 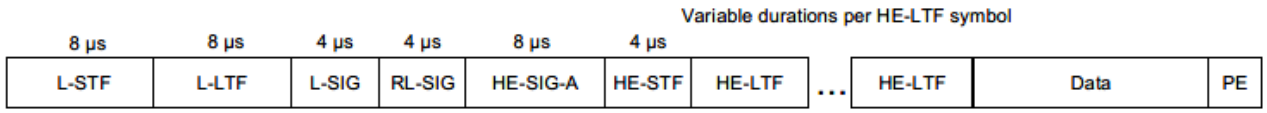 **Figure 27-8—HE SU PPDU format** See also:[6]

[6] IEEE Std 802.11ax-2021, Sec. 27.3.4.

Claim 1	Wi-Fi 6 Accused Instrumentalities
	The fields of the HE PPDU formats are summarized in Table 27-11. **Table 27-11—HE PPDU fields** **Field** / **Description** L-STF — Non-HT Short Training field L-LTF — Non-HT Long Training field L-SIG — Non-HT SIGNAL field RL-SIG — Repeated Non-HT SIGNAL field HE-SIG-A — HE SIGNAL A field HE-SIG-B — HE SIGNAL B field HE-STF — HE Short Training field HE-LTF — HE Long Training field Data — The Data field carrying the PSDU(s) PE — Packet extension field The RL-SIG, HE-SIG-A, HE-STF, HE-LTF, and PE fields are present in all HE PPDU formats. The HE-SIG-B field is present only in the HE MU PPDU. The PE field is defined in 27.3.13. The L-STF, L-LTF, L-SIG, RL-SIG, HE-SIG-A, and HE-SIG-B fields are referred to as *pre-HE modulated fields*, while the HE-STF, HE-LTF, Data, and PE fields are referred to as *HE modulated fields*.

Claim 1	Wi-Fi 6 Accused Instrumentalities
	The first header field comprises two parts. For example, the HE-SIG-A field comprises two subfields, HE-SIG-A1 and HE-SIG-A2. This is indicated below:[7] **27.3.6.6 Construction of HE-SIG-A field** a) For an HE SU PPDU, HE MU PPDU, and HE TB PPDU, the HE-SIG-A field consists of two subfields, HE-SIG-A1 and HE-SIG-A2 as defined in 27.3.11.7, and is constructed as follows: 1) Obtain the HE-SIG-A field values from the TXVECTOR. Add the reserved bits, append the calculated CRC, and then append the N_{tail} tail bits as shown in 27.3.11.7. This results in 52 uncoded bits. 2) BCC encoder: Encode the data by a convolutional encoder at the rate $R = 1/2$ as described in 17.3.5.6. 3) BCC interleaver: Interleave as described in 27.3.12.8. 4) Constellation mapper: BPSK modulate the first 52 interleaved bits as described in 17.3.5.8 to form the first OFDM symbol of the HE-SIG-A field. BPSK modulate the second 52 interleaved bits to form the second OFDM symbol of the HE-SIG-A field. 5) Pilot insertion: Insert pilots as described in 17.3.5.9. 6) Duplicate and phase rotation: Duplicate the HE-SIG-A OFDM symbols over each occupied 20 MHz subchannel of the channel width. Apply the appropriate phase rotation for each occupied 20 MHz subchannel as described in 27.3.10 and 21.3.7.5. 7) CSD per STS: If the TXVECTOR parameter BEAM_CHANGE is 0, apply CSD per STS for each space-time stream and frequency segment as described in 27.3.11.2.2 before spatial mapping. 8) Spatial mapping: If the TXVECTOR parameter BEAM_CHANGE is 0, apply the A matrix and the Q matrix as described in 27.3.11.7.4. 9) IDFT: Compute the inverse discrete Fourier transform. 10) CSD per chain: If the TXVECTOR parameter BEAM_CHANGE is 1 or not present, apply CSD per chain for each transmit chain and frequency segment as described in 27.3.11.2.1. 11) GI and windowing: Prepend a GI ($T_{GI,\text{Pre-HE}}$), and apply windowing as described in 27.3.10. 12) Analog and RF: Upconvert the resulting complex baseband waveform associated with each transmit chain to an RF signal according to the center frequency of the desired channel and transmit. Refer to 27.3.10 and 27.3.11 for details.

[7] IEEE Std 802.11ax-2021, Sec. 27.3.6.6.

Claim 1	Wi-Fi 6 Accused Instrumentalities
	A first part comprises a first set of header bits of the first header field. For example, the HE-SIG-A1 subfield comprises a first set of header bits of HE-SIG-A. This is indicated below:[8]

27.3.11.7.2 Content

The HE-SIG-A field for an HE SU PPDU or an HE ER SU PPDU contains the fields listed in Table 27-18.

Table 27-18—HE-SIG-A field of an HE SU PPDU and HE ER SU PPDU

Bit	Field	Number of bits	Description
HE-SIG-A1 subfield of HE-SIG-A field			
B0	Format	1	Differentiate an HE SU PPDU and HE ER SU PPDU from an HE TB PPDU: Set to 1 for an HE SU PPDU and HE ER SU PPDU.
B1	Beam Change	1	Set to 1 to indicate that the pre-HE modulated fields of the PPDU may be spatially mapped differently from the first symbol of the HE-LTF. Equation (27-6), Equation (27-9), Equation (27-12), Equation (27-14), Equation (27-16), and Equation (27-18) apply if the Beam Change field is 1. Set to 0 to indicate that the pre-HE modulated fields of the PPDU are spatially mapped the same way as the first symbol of the HE-LTF on each subcarrier. Equation (27-8), Equation (27-10), Equation (27-13), Equation (27-15), Equation (27-17), and Equation (27-19) apply if the Beam Change field is 0.
B2	UL/DL	1	Indicates whether the PPDU is sent UL or DL. Set to 1 if the PPDU is addressed to an AP. Set to 0 otherwise. See TXVECTOR parameter UPLINK_FLAG.

[8] IEEE Std 802.11ax-2021, Sec. 27.3.11.7.2.

Claim 1	Wi-Fi 6 Accused Instrumentalities
	(cont.)

B3–B6	HE-MCS	4	For an HE SU PPDU: Set to *n* for HE-MCS *n*, where *n* = 0, 1, 2, …, 11. Values 12–15 are reserved. For an HE ER SU PPDU with Bandwidth field set to 0 (242-tone RU): Set to *n* for HE-MCS *n*, where *n* = 0, 1, 2. Values 3–15 are reserved. For an HE ER SU PPDU with Bandwidth field set to 1 (upper frequency 106-tone RU): Set to 0 for HE-MCS 0. Values 1–15 are reserved.
B7	DCM	1	Indicates whether DCM is applied to the Data field for the HE-MCS indicated. See Table 27-19 for the interpretation of this field. NOTE—DCM is applicable to only HE-MCSs 0, 1, 3, and 4. DCM is applicable to only 1 and 2 spatial streams.
B8–B13	BSS Color	6	An identifier of the BSS. See TXVECTOR parameter BSS_COLOR.

Claim 1	Wi-Fi 6 Accused Instrumentalities
	(cont.) **Table 27-18—HE-SIG-A field of an HE SU PPDU and HE ER SU PPDU *(continued)***

Bit	Field	Number of bits	Description
B14	Reserved	1	Reserved and set to 1.
B15–B18	Spatial Reuse	4	Indicates whether spatial reuse modes are allowed during the transmission of this PPDU: Set to a value from Table 27-22 (see 26.11.6 and 26.10).
B19–B20	Bandwidth	2	For an HE SU PPDU: Set to 0 for 20 MHz. Set to 1 for 40 MHz. Set to 2 for 80 MHz. Set to 3 for 160 MHz and 80+80 MHz. For an HE ER SU PPDU: Set to 0 for 242-tone RU. Set to 1 for upper frequency 106-tone RU within the primary 20 MHz. Values 2 and 3 are reserved.
B21–B22	GI+HE-LTF Size	2	Indicates the GI duration and HE-LTF size. See Table 27-19 for the interpretation of this field.
B23–B25	NSTS And Midamble Periodicity	3	If the Doppler field is 0, indicates the number of space-time streams. Set to the number of space-time streams minus 1. For an HE ER SU PPDU, values 2–7 are reserved. If the Doppler field is 1, then B23-B24 indicates the number of space time streams, up to 4, and B25 indicates the midamble periodicity. B23-B24 is set to the number of space time streams minus 1. For an HE ER SU PPDU, values 2 and 3 are reserved. B25 is set to 0 for 10 symbol midamble periodicity, to 1 for 20 symbol midamble periodicity. See TXVECTOR parameter MIDAMBLE_PERIODICITY.

Claim 1	Wi-Fi 6 Accused Instrumentalities
	A second part comprises a second set of header bits of the first header field. For example, the HE-SIG-A2 subfield comprises a second set of header bits of HE-SIG-A. This is indicated below:[9]

Bit	Field	Number of bits	Description
HE-SIG-A2 subfield of HE-SIG-A field			
B0–B6	TXOP	7	Set to 127 to indicate no duration information. Set to a value less than 127 to indicate the closest minimum bound on the duration information for NAV setting and protection of the TXOP as follows: If B0 is 0, the TXOP duration indicated is B1-B6, in units of 8 µs. If B0 is 1, the TXOP duration indicated is B1-B6, in units of 128 µs, plus 512 µs. See TXVECTOR parameter TXOP_DURATION.
B7	Coding	1	Indicates whether BCC or LDPC is used: Set to 0 to indicate BCC Set to 1 to indicate LDPC
B8	LDPC Extra Symbol Segment	1	Indicates the presence of the LDPC extra symbol segment: Set to 1 if an LDPC extra symbol segment is present. Set to 0 if an LDPC extra symbol segment is not present. Reserved and set to 1 if the Coding field is 0.
B9	STBC	1	Indicates whether STBC is applied to the Data field. See Table 27-19 for the interpretation of this field.

[9] IEEE Std 802.11ax-2021, Sec. 27.3.11.7.2.

Claim 1	Wi-Fi 6 Accused Instrumentalities
	(cont.) **Table 27-18—HE-SIG-A field of an HE SU PPDU and HE ER SU PPDU *(continued)*** **Bit** | **Field** | **Number of bits** | **Description** B10 | Beamformed | 1 | Set to 1 if a beamforming steering matrix is applied to the HE modulated fields. Set to 0 otherwise. B11–B12 | Pre-FEC Padding Factor | 2 | Indicates the pre-FEC padding factor: Set to 0 to indicate a pre-FEC padding factor of 4. Set to 1 to indicate a pre-FEC padding factor of 1. Set to 2 to indicate a pre-FEC padding factor of 2. Set to 3 to indicate a pre-FEC padding factor of 3. B13 | PE Disambiguity | 1 | Indicates PE disambiguity as defined in 27.3.13. B14 | Reserved | 1 | Reserved and set to 1. B15 | Doppler | 1 | Set to 1 if one of the following applies: — The number of OFDM symbols in the Data field is larger than the signaled midamble periodicity plus 1 and the midamble is present. — The number of OFDM symbols in the Data field is less than or equal to the signaled midamble periodicity plus 1 (see 27.3.12.16, the midamble is not present, but the channel is fast varying. It recommends that midamble may be used for the PPDUs of the reverse link. Set to 0 otherwise. B16–B19 | CRC | 4 | CRC for bits 0–41 of the HE-SIG-A field (see 27.3.11.7.3). Bits 0–41 of the HE-SIG-A field correspond to bits 0–25 of the HE-SIG-A1 subfield followed by bits 0–15 of the HE-SIG-A2 subfield. B20–B25 | Tail | 6 | Used to terminate the trellis of the convolutional decoder. Set to 0. As shown above, the first set of header bits of the first header field (HE-SIG-A1) is different than the second set of header bits of the first header field (HE-SIG-A2).

Claim 1	Wi-Fi 6 Accused Instrumentalities
	It is anticipated that discovery will provide further details of the manner of infringement of the Accused Instrumentalities. In addition, the foregoing structures may be implemented in alternative configurations and usages that are equivalent to this claim element. In addition, the foregoing structures may be implemented in alternative configurations and usages that are equivalent to this claim element because they perform substantially the same function of generating a first packet type for transmission in a first channel bandwidth, the first packet type comprising a first header field, wherein the first header field comprises two parts, a first part comprising a first set of header bits of the first header field and a second part comprising a second set of header bits of the first header field, wherein the first set of header bits of the first header field is different than the second set of header bits of the first header field, in substantially the same way of generating a first packet type for transmission in a first channel bandwidth, the first packet type comprising a first header field, wherein the first header field comprises two parts, a first part comprising a first set of header bits of the first header field and a second part comprising a second set of header bits of the first header field, wherein the first set of header bits of the first header field is different than the second set of header bits of the first header field, to obtain the same result of providing additional diversity, reducing data loss and increasing decoding accuracy. For example, alternative equivalent configurations include the following, separately or in conjunction, which achieve the same functionalities provided by the claimed configurations: alternative configurations of HE PHY and PPDUs, including HE SU PPDU, HE MU PPDU, HE ER SU PPDU and HE TB PPDU; alternative configurations of the packet types or formats, headers fields, parts and bits, including HE-SIG-A, HE-SIG-A1, HE-SIG-A1-R, HE-SIG-A2, HE-SIG-A2-R, HE-SIG-B, HE-STF, HE-LTF, L-STF, L-LTF, L-SIG, RL-SIG and PE; alternative configurations of frequency and channel bands and bandwidth divisions, subdivisions, subchannels and subcarriers; alternative configurations of the HE STA, pre-HE [de]modulated and HE [de]modulated fields, transmitter, receiver, encoder, decoder, modulator and demodulator, and alternative symbols and symbol configuration, in transmitting, receiving, encoding, modulating or generating, including for alternative configurations for SU and/or MU.

Claim 1	Wi-Fi 6 Accused Instrumentalities
an encoder and a modulator operable to generate a first OFDM symbol followed by a second OFDM symbol, wherein the first OFDM symbol is used to transmit the first part of the first header field and the second OFDM symbol is used to transmit the second part of the first header field;	The Accused Instrumentalities comprise an encoder and a modulator operable to generate a first OFDM symbol followed by a second OFDM symbol, wherein the first OFDM symbol is used to transmit the first part of the first header field and the second OFDM symbol is used to transmit the second part of the first header field. For example, Wi-Fi 6 devices comprise an encoder and a modulator operable to generate a first OFDM symbol followed by a second OFDM symbol, wherein the first OFDM symbol is used to transmit the first part of the first header field and the second OFDM symbol is used to transmit the second part of the first header field. This is indicated below:[10] **27.3.6.6 Construction of HE-SIG-A field** a) For an HE SU PPDU, HE MU PPDU, and HE TB PPDU, the HE-SIG-A field consists of two subfields, HE-SIG-A1 and HE-SIG-A2 as defined in 27.3.11.7, and is constructed as follows: 1) Obtain the HE-SIG-A field values from the TXVECTOR. Add the reserved bits, append the calculated CRC, and then append the N_{tail} tail bits as shown in 27.3.11.7. This results in 52 uncoded bits. 2) BCC encoder: Encode the data by a convolutional encoder at the rate $R = 1/2$ as described in 17.3.5.6. 3) BCC interleaver: Interleave as described in 27.3.12.8. 4) Constellation mapper: BPSK modulate the first 52 interleaved bits as described in 17.3.5.8 to form the first OFDM symbol of the HE-SIG-A field. BPSK modulate the second 52 interleaved bits to form the second OFDM symbol of the HE-SIG-A field.

[10] IEEE Std 802.11ax-2021, Sec. 27.3.6.6.

Claim 1	Wi-Fi 6 Accused Instrumentalities
	(cont.) 5) Pilot insertion: Insert pilots as described in 17.3.5.9. 6) Duplicate and phase rotation: Duplicate the HE-SIG-A OFDM symbols over each occupied 20 MHz subchannel of the channel width. Apply the appropriate phase rotation for each occupied 20 MHz subchannel as described in 27.3.10 and 21.3.7.5. 7) CSD per STS: If the TXVECTOR parameter BEAM_CHANGE is 0, apply CSD per STS for each space-time stream and frequency segment as described in 27.3.11.2.2 before spatial mapping. 8) Spatial mapping: If the TXVECTOR parameter BEAM_CHANGE is 0, apply the A matrix and the Q matrix as described in 27.3.11.7.4. 9) IDFT: Compute the inverse discrete Fourier transform. 10) CSD per chain: If the TXVECTOR parameter BEAM_CHANGE is 1 or not present, apply CSD per chain for each transmit chain and frequency segment as described in 27.3.11.2.1. 11) GI and windowing: Prepend a GI ($T_{GI,\text{Pre-HE}}$), and apply windowing as described in 27.3.10. 12) Analog and RF: Upconvert the resulting complex baseband waveform associated with each transmit chain to an RF signal according to the center frequency of the desired channel and transmit. Refer to 27.3.10 and 27.3.11 for details.

Claim 1	Wi-Fi 6 Accused Instrumentalities
	See also:[11] **27.3.11.7.4 Encoding and modulation** For an HE SU PPDU, HE MU PPDU, and HE TB PPDU, the HE-SIG-A field is composed of two subfields, HE-SIG-A1 and HE-SIG-A2, each containing 26 data bits. The HE-SIG-A1 subfield is transmitted before the HE-SIG-A2 subfield. The data bits of the HE-SIG-A OFDM symbols shall be BCC encoded at rate $R = 1/2$, be interleaved, be mapped to a BPSK constellation, and have pilots inserted following the steps described in 17.3.5.6, 27.3.12.8, 17.3.5.8, and 17.3.5.9, respectively. The constellation mappings of the HE-SIG-A field in an HE SU PPDU, HE MU PPDU, and HE TB PPDU are shown in Figure 27-25. The first half and second half of the stream of 104 complex numbers generated by these steps (before pilot insertion) are divided into two groups of 52 complex numbers, where the first 52 complex numbers form the first OFDM symbol of the HE-SIG-A field and the second 52 complex numbers form the second OFDM symbol of the HE-SIG-A field, respectively. If the TXVECTOR parameter BEAM_CHANGE is 1 or not present, the time domain waveform for the HE-SIG-A field of an HE SU PPDU, HE MU PPDU, and HE TB PPDU, transmitted on frequency segment i_{Seg} and transmit chain i_{TX}, shall be as specified in Equation (27-16). $$r_{\text{HE-SIG-A}}^{(i_{Seg} i_{TX})}(t) = \frac{1}{\sqrt{N_{TX} \cdot N_{\text{HE-SIG-A}}^{\text{Tone}} \cdot \frac{\lvert\Omega_{20\text{MHz}}\rvert}{N_{20\text{MHz}}}}} \sum_{n=0}^{1} w_{T_{SYML}}(t - nT_{SYML}) \sum_{i_{BW} \in \Omega_{20\text{MHz}}} \sum_{k=-28}^{28} \eta_{\text{HE-SIG-A},k} \left(\begin{array}{l} \Upsilon_{(k - K_{\text{Shift}}(i_{BW})),\,\text{BW}}(D_{k,n,20} + p_{n+2} P_k) \\ \cdot \exp(j2\pi(k - K_{\text{Shift}}(i_{\text{BW}}))\Delta_{F,\,\text{Pre-HE}}(t - nT_{SYML} - T_{GI,\,\text{Pre-HE}} - T_{CS}^{i_{TX}})) \end{array} \right) \quad (27\text{-}16)$$

[11] IEEE Std 802.11ax-2021, Sec. 27.3.11.7.4.

Claim 1	Wi-Fi 6 Accused Instrumentalities
	(cont.) where T_{SYML} is given in Table 27-12 $K_{\text{Shift}}(i) = (N_{20\text{MHz}} - 1 - 2i) \cdot 32$ $D_{k,n,20} = \begin{cases} 0, k = 0, \pm 7, \pm 21 \\ d_{M^r_{20}(k),n}, \text{ otherwise} \end{cases}$ $M^r_{20}(k) = \begin{cases} k+28, -28 \le k \le -22 \\ k+27, -20 \le k \le -8 \\ k+26, -6 \le k \le -1 \\ k+25, 1 \le k \le 6 \\ k+24, 8 \le k \le 20 \\ k+23, 22 \le k \le 28 \end{cases}$ $\eta_{\text{HE-SIG-A},k} = \begin{cases} \left[\frac{1}{\sqrt{2}}, 1\right], \text{ for an HE TB PPDU} \\ 1, \text{ otherwise} \end{cases}$ P_k and p_n are defined in 17.3.5.10 $N^{\text{Tone}}_{\text{HE-SIG-A}}$ is defined in Table 27-16 $T^{i_{TX}}_{CS}$ represents the cyclic shift for transmit chain i_{TX} with a value given in 27.3.11.2.1

Claim 1	Wi-Fi 6 Accused Instrumentalities
	(cont.) If the TXVECTOR parameter BEAM_CHANGE is 0, the time domain waveform of the HE-SIG-A field shall be as given by Equation (27-17). $$r_{\text{HE-SIG-A}}^{(i_{Seg}, i_{TX})}(t) = \frac{1}{\sqrt{N_{STS} \cdot N_{\text{HE-SIG-A}}^{\text{Tone}} \cdot \frac{\lvert\Omega_{20\text{MHz}}\rvert}{N_{20\text{MHz}}}}} \sum_{n=0}^{1} w_{T_{SYML}}(t - nT_{SYML}) \quad (27\text{-}17)$$ $$\sum_{i_{BW}=0}^{N_{20\text{MHz}}-1} \sum_{k=-28}^{28} \sum_{m=1}^{N_{STS}} \left(\begin{array}{l} \left[Q_{4(k-K_{\text{Shift}}(i_{BW}))}^{(i_{Seg})} \right]_{i_{TX}, m} \left[A_{\text{HE-LTF}}^{4(k-K_{\text{Shift}}(i_{BW}))} \right]_{m,1} (D_{k,n,20} + p_{n+2} P_k) \\ \cdot \exp(j2\pi(k - K_{\text{Shift}}(i_{\text{BW}}))\Delta_{F,\text{Pre-HE}}(t - nT_{SYML} - T_{\text{GI, Pre-HE}} - T_{CS,HE}(m))) \end{array} \right)$$ where $T_{CS,\text{HE}}(m)$ represents the cyclic shift for space-time stream m as defined in 27.3.11.2.2 $Q_k^{(i_{Seg})}$ is defined in 27.3.10 $A_{\text{HE-LTF}}^k$ is defined in Equation (27-55)

Claim 1	Wi-Fi 6 Accused Instrumentalities
	See also:[12] 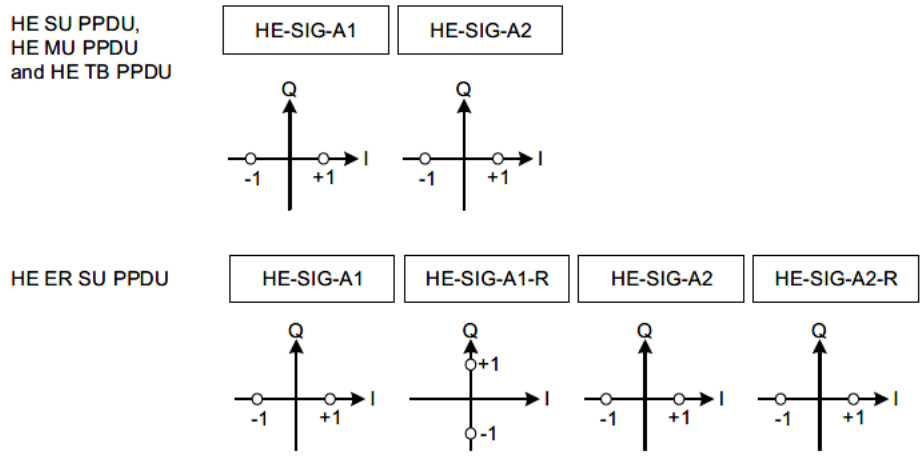 **Figure 27-25—Data subcarrier constellation of HE-SIG-A symbols** It is anticipated that discovery will provide further details of the manner of infringement of the Accused Instrumentalities. In addition, the foregoing structures may be implemented in alternative configurations and usages that are equivalent to this claim element. In addition, the foregoing structures may be implemented in alternative configurations and usages that are equivalent to this claim element because they perform substantially the same function of generating a first OFDM symbol followed by a second OFDM symbol, wherein the first OFDM symbol is used to transmit the first part of the first header field and the second OFDM symbol is used to transmit the second part of the first header field, in substantially the same way of generating a first OFDM symbol followed by a second OFDM symbol, wherein the first OFDM symbol is

[12] IEEE Std 802.11ax-2021, Sec. 27.3.11.7.4.

Claim 1	Wi-Fi 6 Accused Instrumentalities
	used to transmit the first part of the first header field and the second OFDM symbol is used to transmit the second part of the first header field, to obtain the same result of providing additional diversity, reducing data loss and increasing decoding accuracy. For example, alternative equivalent configurations include the following, separately or in conjunction, which achieve the same functionalities provided by the claimed configurations: alternative configurations of HE PHY and PPDUs, including HE SU PPDU, HE MU PPDU, HE ER SU PPDU and HE TB PPDU; alternative configurations of the packet types or formats, headers fields, parts and bits, including HE-SIG-A, HE-SIG-A1, HE-SIG-A1-R, HE-SIG-A2, HE-SIG-A2-R, HE-SIG-B, HE-STF, HE-LTF, L-STF, L-LTF, L-SIG, RL-SIG and PE; alternative configurations of frequency and channel bands and bandwidth divisions, subdivisions, subchannels and subcarriers; alternative configurations of the HE STA, pre-HE [de]modulated and HE [de]modulated fields, transmitter, receiver, encoder, decoder, modulator and demodulator, and alternative symbols and symbol configuration, in transmitting, receiving, encoding, modulating or generating, including for alternative configurations for SU and/or MU.
the wireless OFDM communications transmitter further operable to transmit the first packet type over a wireless communication channel,	The Accused Instrumentalities comprise the wireless OFDM communications transmitter further operable to transmit the first packet type over a wireless communication channel. For example, Wi-Fi 6 devices comprise the wireless OFDM communications transmitter further operable to transmit the first packet type over a wireless communication channel. For example, Wi-Fi 6 comprises high-efficiency stations (HE STAs) capable of transmitting PPDUs including the HE SU PPDU via 2.4, 5, and 6 Ghz channels. The Wi-Fi 6 standard provides that "an HE STA shall support the following features: Transmission and reception of an HE SU PPDU that consists of a single RU spanning the entire PPDU bandwidth."[13] This is indicated below:[14]

[13] IEEE Std 802.11ax-2021, Sec. 27.1.1.

[14] IEEE Std 802.11ax-2021, Sec. 27.1.1.

Appendix H
Claim Chart for U.S. Patent No. 10,291,449

Claim 1	Wi-Fi 6 Accused Instrumentalities
	27. High-efficiency (HE) PHY specification **27.1 Introduction** **27.1.1 Introduction to the HE PHY** Clause 27 specifies the PHY entity for a high-efficiency (HE) orthogonal frequency division multiplexing (OFDM) system. In addition to the requirements in Clause 27, an HE STA shall be capable of transmitting and receiving PPDUs that are compliant with the mandatory requirements of the following PHY specifications: — Clause 19 and Clause 21 if the HE STA supports an operating channel width greater than or equal to 80 MHz and is operating in the 5 GHz band. — Clause 19 and Clause 21 transmission and reception on 20 MHz channel width (see 26.17.1) if the HE STA is a 20 MHz-only non-AP HE STA and is operating in the 5 GHz band. — Clause 19 if the HE STA is operating in the 2.4 GHz band. — Clause 17 if the HE STA is operating in the 6 GHz band. For 2.4 GHz band operation, the HE PHY is based on HT PHY defined in Clause 19, which in turn is based on the OFDM PHY defined in Clause 17. For 5 GHz band operation, the HE PHY is based on the VHT PHY defined in Clause 21, which in turn is based on the HT PHY defined in Clause 19, which in turn is further based on the OFDM PHY defined in Clause 17. For 6 GHz band operation, the HE PHY is based on the OFDM PHY defined in Clause 17. An HE STA shall support the following features: — Transmission and reception of an HE SU PPDU that consists of a single RU spanning the entire PPDU bandwidth. — Transmission and reception of an HE ER SU PPDU that consists of a 242-tone RU spanning the entire primary 20 MHz PPDU bandwidth. It is anticipated that discovery will provide further details of the manner of infringement of the Accused Instrumentalities.

Claim 1	Wi-Fi 6 Accused Instrumentalities
	In addition, the foregoing structures may be implemented in alternative configurations and usages that are equivalent to this claim element. In addition, the foregoing structures may be implemented in alternative configurations and usages that are equivalent to this claim element because they perform substantially the same function of transmitting the first packet type over a wireless communication channel, in substantially the same way of transmitting the first packet type over a wireless communication channel, to obtain the same result of providing additional diversity thereby increasing the likelihood of decoding the header information correctly. For example, alternative equivalent configurations include the following, separately or in conjunction, which achieve the same functionalities provided by the claimed configurations: alternative configurations of HE PHY and PPDUs, including HE SU PPDU, HE MU PPDU, HE ER SU PPDU and HE TB PPDU; alternative configurations of the packet types or formats, headers fields, parts and bits, including HE-SIG-A, HE-SIG-A1, HE-SIG-A1-R, HE-SIG-A2, HE-SIG-A2-R, HE-SIG-B, HE-STF, HE-LTF, L-STF, L-LTF, L-SIG, RL-SIG and PE; alternative configurations of frequency and channel bands and bandwidth divisions, subdivisions, subchannels and subcarriers; alternative configurations of the HE STA, pre-HE [de]modulated and HE [de]modulated fields, transmitter, receiver, encoder, decoder, modulator and demodulator, and alternative symbols and symbol configuration, in transmitting, receiving, encoding, modulating or generating, including for alternative configurations for SU and/or MU.
the wireless OFDM communications transmitter further operable to generate a second packet type for transmission in a second channel bandwidth, the second packet type comprising a second header field, wherein the second header field comprises four parts, a first part comprising a	The Accused Instrumentalities comprise the wireless OFDM communications transmitter further operable to generate a second packet type for transmission in a second channel bandwidth, the second packet type comprising a second header field, wherein the second header field comprises four parts, a first part comprising a first set of header bits of the second header field, a second part comprising a second set of header bits of the second header field, a third part comprising a third set of header bits of the second header field and a fourth part comprising a fourth set of header bits of the second header field. For example, Wi-Fi 6 devices comprise the wireless OFDM communications transmitter further operable to generate a second packet type comprising a second header field, wherein the second header field comprises four parts, a first part comprising a first set of header bits of the second

Claim 1	Wi-Fi 6 Accused Instrumentalities
first set of header bits of the second header field, a second part comprising a second set of header bits of the second header field, a third part comprising a third set of header bits of the second header field and a fourth part comprising a fourth set of header bits of the second header field,	header field, a second part comprising a second set of header bits of the second header field, a third part comprising a third set of header bits of the second header field and a fourth part comprising a fourth set of header bits of the second header field. Wi-Fi 6 devices comprise the wireless OFDM communications transmitter further operable to generate a second packet type comprising a second header field. For example, Wi-Fi 6 devices can transmit the high-efficiency extended range single-user PPDU (HE ER SU PPDU) (second packet type), in addition to the HE SU PPDU (first packet type):[15] An HE STA shall support the following features: — Transmission and reception of an HE SU PPDU that consists of a single RU spanning the entire PPDU bandwidth. — Transmission and reception of an HE ER SU PPDU that consists of a 242-tone RU spanning the entire primary 20 MHz PPDU bandwidth. See also:[16] **high-efficiency (HE) extended range (ER) single-user (SU) physical layer (PHY) protocol data unit (PPDU) (HE ER SU PPDU):** A PPDU transmitted with HE ER SU PPDU format. This PPDU carries a single PHY service data unit (PSDU). The second packet type is for transmission in a second channel bandwidth. For example, the HE ER SU PPDU is for transmission in a second channel bandwidth. This is indicated below:[17]

[15] IEEE Std 802.11ax-2021, Sec. 27.1.1.

[16] IEEE Std 802.11ax-2021, Sec. 3.2.

[17] IEEE Std 802.11ax-2021, Sec. 27.3.11.7.2.

Claim 1	Wi-Fi 6 Accused Instrumentalities
	Table 27-18—HE-SIG-A field of an HE SU PPDU and HE ER SU PPDU *(continued)*

Bit	Field	Number of bits	Description
B14	Reserved	1	Reserved and set to 1.
B15–B18	Spatial Reuse	4	Indicates whether spatial reuse modes are allowed during the transmission of this PPDU: Set to a value from Table 27-22 (see 26.11.6 and 26.10).
B19–B20	Bandwidth	2	For an HE SU PPDU: Set to 0 for 20 MHz. Set to 1 for 40 MHz. Set to 2 for 80 MHz. Set to 3 for 160 MHz and 80+80 MHz. For an HE ER SU PPDU: Set to 0 for 242-tone RU. Set to 1 for upper frequency 106-tone RU within the primary 20 MHz. Values 2 and 3 are reserved.

The second packet type comprises a second header field. For example, the HE ER SU PPDU comprises an HE-SIG-A field:[18]

[18] IEEE Std 802.11ax-2021, Sec. 27.3.4.

Appendix H
Claim Chart for U.S. Patent No. 10,291,449

Claim 1	Wi-Fi 6 Accused Instrumentalities
	The format of the HE ER SU PPDU is defined as in Figure 27-10. This format is used for SU transmission, and in this format, the HE-SIG-A field is twice as long as the HE-SIG-A field in other HE PPDU formats. 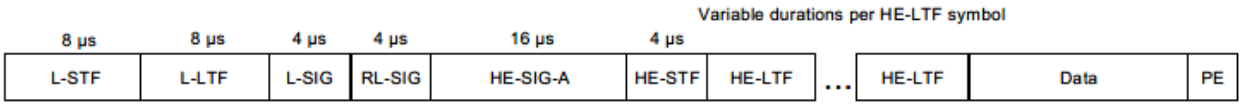 **Figure 27-10—HE ER SU PPDU format** The second header field comprises four parts, a first part comprising a first set of header bits of the second header field, a second part comprising a second set of header bits of the second header field, a third part comprising a third set of header bits of the second header field and a fourth part comprising a fourth set of header bits of the second header field. For example, the HE-SIG-A field in the HE ER SU PPDU comprises four subfields, HE-SIG-A1, HE-SIG-A1-R, HE-SIG-A2, and HE-SIG-A2-R:[19]

[19] IEEE Std 802.11ax-2021, Sec. 27.3.6.6.

Appendix H
Claim Chart for U.S. Patent No. 10,291,449

Claim 1	Wi-Fi 6 Accused Instrumentalities
	b) For an HE ER SU PPDU, the HE-SIG-A field consists of four subfields: HE-SIG-A1, HE-SIG-A1-R, HE-SIG-A2, and HE-SIG-A2-R. The HE-SIG-A1 and HE-SIG-A1-R subfields have the same data bits while the HE-SIG-A2 and HE-SIG-A2-R subfields have the same data bits as defined in 27.3.11.7. The HE-SIG-A field is constructed as follows: 1) Obtain the HE-SIG-A fields from the TXVECTOR. Add the reserved bits, append the calculated CRC, and then append the N_{tail} tail bits as shown in 27.3.11.7. This results in 52 uncoded bits. 2) BCC encoder: Encode the data by a convolutional encoder at the rate $R = 1/2$ as described in 17.3.5.6. 3) BCC interleaver: Interleave the data bits of the HE-SIG-A1 and HE-SIG-A2 subfields as described in 27.3.12.8. The data bits of the HE-SIG-A1-R and HE-SIG-A2-R subfields are not interleaved. 4) Constellation mapper: BPSK modulate the HE-SIG-A1, HE-SIG-A2, and HE-SIG-A2-R data bits as described in 17.3.5.8 to form the first, third, and fourth OFDM symbol of the HE-SIG-A field, respectively. QBPSK modulate the HE-SIG-A1-R encoded data bits to form the second OFDM symbol of the HE-SIG-A field. 5) Pilot insertion: Insert pilots as described in 17.3.5.9. 6) Duplication and phase rotation: Duplicate the HE-SIG-A field over each occupied 20 MHz subchannel of the channel bandwidth. Apply appropriate phase rotation for each occupied 20 MHz subchannel as described in 27.3.10 and 21.3.7.5. 7) CSD per STS: If the TXVECTOR parameter BEAM_CHANGE is 0, apply CSD per STS for each space-time stream and frequency segment as described in 27.3.11.2.2 before spatial mapping. 8) Spatial mapping: If the TXVECTOR parameter BEAM_CHANGE is 0, apply the A matrix and the Q matrix as described in 27.3.11.7.4. 9) IDFT: Compute the inverse Fourier transform. 10) CSD per chain: If the TXVECTOR parameter BEAM_CHANGE is 1 or not present, apply CSD per chain for each transmit chain and frequency segment as described in 27.3.11.2.1. 11) GI and windowing: Prepend a GI ($T_{GI,\text{Pre-HE}}$), and apply windowing as described in 27.3.10. 12) Analog and RF: Upconvert the resulting complex baseband waveform associated with each transmit chain to an RF signal according to the center frequency of the desired channel and transmit. Refer to 27.3.10 and 27.3.11 for details.

Claim 1	Wi-Fi 6 Accused Instrumentalities
	HE-SIG-A1 comprises a first set of header bits of HE-SIG-A, HE-SIG-A1-R comprises a second set of header bits of HE-SIG-A, HE-SIG-A2 comprises a third set of header bits of HE-SIG-A and HE-SIG-A2-R comprises a fourth set of header bits of HE-SIG-A. This is indicated below:[20] For an HE ER SU PPDU, the HE-SIG-A field is composed of four subfields: HE-SIG-A1, HE-SIG-A1-R, HE-SIG-A2, and HE-SIG-A2-R. Each subfield contains 26 data bits. These four subfields are transmitted sequentially from HE-SIG-A1 to HE-SIG-A2-R. The data bits of the HE-SIG-A1 and HE-SIG-A2 subfields shall be BCC encoded at rate $R = 1/2$, be interleaved, be mapped to a BPSK constellation, and have pilots inserted. The HE-SIG-A1-R subfield has the same encoded bits as the HE-SIG-A1 subfield, and the encoded bits shall be mapped to a QBPSK constellation without interleaving and have pilots inserted. The constellation mappings of the HE-SIG-A field in an HE ER SU PPDU are shown in Figure 27-25. The QBPSK constellation on the HE-SIG-A1-R subfield is used to differentiate between an HE ER SU PPDU and an HE MU PPDU when $m = 1$ in Equation (27-11). The HE-SIG-A2-R subfield has the same encoded bits as the HE-SIG-A2 subfield, and the encoded bits shall be mapped to a BPSK constellation without interleaving and have pilots inserted. BCC encoding, data interleaving, constellation mapping, and pilot insertion follow the steps described in 17.3.5.6, 27.3.12.8, 17.3.5.8, and 17.3.5.9, respectively. 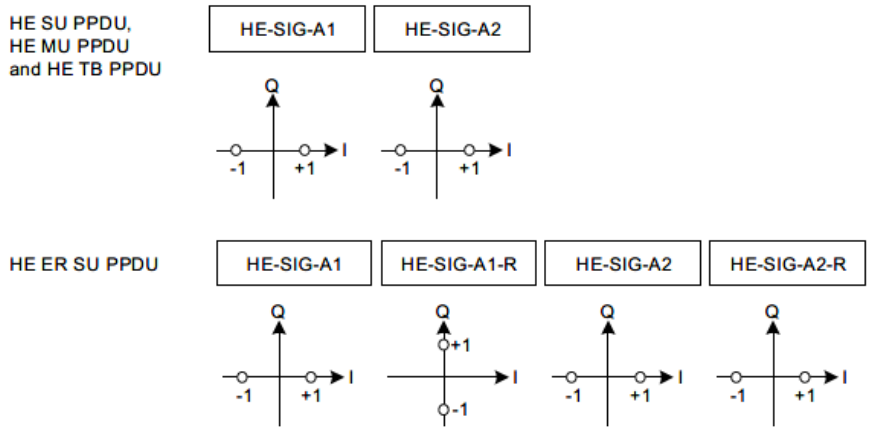 **Figure 27-25—Data subcarrier constellation of HE-SIG-A symbols**

[20] IEEE Std 802.11ax-2021, Sec. 27.3.11.7.4.

Claim 1	Wi-Fi 6 Accused Instrumentalities
	See also:[21]

Table 27-18—HE-SIG-A field of an HE SU PPDU and HE ER SU PPDU

Bit	Field	Number of bits	Description
HE-SIG-A1 subfield of HE-SIG-A field			
B0	Format	1	Differentiate an HE SU PPDU and HE ER SU PPDU from an HE TB PPDU: Set to 1 for an HE SU PPDU and HE ER SU PPDU.
B1	Beam Change	1	Set to 1 to indicate that the pre-HE modulated fields of the PPDU may be spatially mapped differently from the first symbol of the HE-LTF. Equation (27-6), Equation (27-9), Equation (27-12), Equation (27-14), Equation (27-16), and Equation (27-18) apply if the Beam Change field is 1. Set to 0 to indicate that the pre-HE modulated fields of the PPDU are spatially mapped the same way as the first symbol of the HE-LTF on each subcarrier. Equation (27-8), Equation (27-10), Equation (27-13), Equation (27-15), Equation (27-17), and Equation (27-19) apply if the Beam Change field is 0.
B2	UL/DL	1	Indicates whether the PPDU is sent UL or DL. Set to 1 if the PPDU is addressed to an AP. Set to 0 otherwise. See TXVECTOR parameter UPLINK_FLAG.
B3–B6	HE-MCS	4	For an HE SU PPDU: Set to n for HE-MCS n, where n = 0, 1, 2, …, 11. Values 12–15 are reserved. For an HE ER SU PPDU with Bandwidth field set to 0 (242-tone RU): Set to n for HE-MCS n, where n = 0, 1, 2. Values 3–15 are reserved. For an HE ER SU PPDU with Bandwidth field set to 1 (upper frequency 106-tone RU): Set to 0 for HE-MCS 0. Values 1–15 are reserved.
B7	DCM	1	Indicates whether DCM is applied to the Data field for the HE-MCS indicated. See Table 27-19 for the interpretation of this field. NOTE—DCM is applicable to only HE-MCSs 0, 1, 3, and 4. DCM is applicable to only 1 and 2 spatial streams.
B8–B13	BSS Color	6	An identifier of the BSS. See TXVECTOR parameter BSS_COLOR.

[21] IEEE Std 802.11ax-2021, Sec. 27.3.11.7.2

Claim 1	Wi-Fi 6 Accused Instrumentalities
	Table 27-18—HE-SIG-A field of an HE SU PPDU and HE ER SU PPDU *(continued)*

Bit	Field	Number of bits	Description
B14	Reserved	1	Reserved and set to 1.
B15–B18	Spatial Reuse	4	Indicates whether spatial reuse modes are allowed during the transmission of this PPDU: Set to a value from Table 27-22 (see 26.11.6 and 26.10).
B19–B20	Bandwidth	2	For an HE SU PPDU: Set to 0 for 20 MHz. Set to 1 for 40 MHz. Set to 2 for 80 MHz. Set to 3 for 160 MHz and 80+80 MHz. For an HE ER SU PPDU: Set to 0 for 242-tone RU. Set to 1 for upper frequency 106-tone RU within the primary 20 MHz. Values 2 and 3 are reserved.
B21–B22	GI+HE-LTF Size	2	Indicates the GI duration and HE-LTF size. See Table 27-19 for the interpretation of this field.
B23–B25	NSTS And Midamble Periodicity	3	If the Doppler field is 0, indicates the number of space-time streams. Set to the number of space-time streams minus 1. For an HE ER SU PPDU, values 2–7 are reserved. If the Doppler field is 1, then B23-B24 indicates the number of space time streams, up to 4, and B25 indicates the midamble periodicity. B23-B24 is set to the number of space time streams minus 1. For an HE ER SU PPDU, values 2 and 3 are reserved. B25 is set to 0 for 10 symbol midamble periodicity, to 1 for 20 symbol midamble periodicity. See TXVECTOR parameter MIDAMBLE_PERIODICITY.
HE-SIG-A2 subfield of HE-SIG-A field			
B0–B6	TXOP	7	Set to 127 to indicate no duration information. Set to a value less than 127 to indicate the closest minimum bound on the duration information for NAV setting and protection of the TXOP as follows: If B0 is 0, the TXOP duration indicated is B1-B6, in units of 8 µs. If B0 is 1, the TXOP duration indicated is B1-B6, in units of 128 µs, plus 512 µs. See TXVECTOR parameter TXOP_DURATION.
B7	Coding	1	Indicates whether BCC or LDPC is used: Set to 0 to indicate BCC Set to 1 to indicate LDPC
B8	LDPC Extra Symbol Segment	1	Indicates the presence of the LDPC extra symbol segment: Set to 1 if an LDPC extra symbol segment is present. Set to 0 if an LDPC extra symbol segment is not present. Reserved and set to 1 if the Coding field is 0.
B9	STBC	1	Indicates whether STBC is applied to the Data field. See Table 27-19 for the interpretation of this field.

Claim 1	Wi-Fi 6 Accused Instrumentalities
	(cont.) **Table 27-18—HE-SIG-A field of an HE SU PPDU and HE ER SU PPDU *(continued)*** **Bit** / **Field** / **Number of bits** / **Description** B10 / Beamformed / 1 / Set to 1 if a beamforming steering matrix is applied to the HE modulated fields. Set to 0 otherwise. B11–B12 / Pre-FEC Padding Factor / 2 / Indicates the pre-FEC padding factor: Set to 0 to indicate a pre-FEC padding factor of 4. Set to 1 to indicate a pre-FEC padding factor of 1. Set to 2 to indicate a pre-FEC padding factor of 2. Set to 3 to indicate a pre-FEC padding factor of 3. B13 / PE Disambiguity / 1 / Indicates PE disambiguity as defined in 27.3.13. B14 / Reserved / 1 / Reserved and set to 1. B15 / Doppler / 1 / Set to 1 if one of the following applies: — The number of OFDM symbols in the Data field is larger than the signaled midamble periodicity plus 1 and the midamble is present. — The number of OFDM symbols in the Data field is less than or equal to the signaled midamble periodicity plus 1 (see 27.3.12.16, the midamble is not present, but the channel is fast varying. It recommends that midamble may be used for the PPDUs of the reverse link. Set to 0 otherwise. B16–B19 / CRC / 4 / CRC for bits 0–41 of the HE-SIG-A field (see 27.3.11.7.3). Bits 0–41 of the HE-SIG-A field correspond to bits 0–25 of the HE-SIG-A1 subfield followed by bits 0–15 of the HE-SIG-A2 subfield. B20–B25 / Tail / 6 / Used to terminate the trellis of the convolutional decoder. Set to 0. It is anticipated that discovery will provide further details of the manner of infringement of the Accused Instrumentalities. In addition, the foregoing structures may be implemented in alternative configurations and usages that are equivalent to this claim element. In addition, the foregoing structures may be implemented in alternative configurations and usages that are equivalent to this claim element because they perform substantially the same function of generating a second packet type for transmission in a second channel bandwidth, the second packet type comprising a second header field, wherein the second header field comprises four parts, a first part comprising a first set of header bits of the second header field, a second part comprising a second set of header bits of the second header field, a third part comprising a third set of header bits

Claim 1	Wi-Fi 6 Accused Instrumentalities
	of the second header field and a fourth part comprising a fourth set of header bits of the second header field, in substantially the same way of generating a second packet type for transmission in a second channel bandwidth, the second packet type comprising a second header field, wherein the second header field comprises four parts, a first part comprising a first set of header bits of the second header field, a second part comprising a second set of header bits of the second header field, a third part comprising a third set of header bits of the second header field and a fourth part comprising a fourth set of header bits of the second header field, to obtain the same result of providing additional diversity, reducing data loss and increasing decoding accuracy. For example, alternative equivalent configurations include the following, separately or in conjunction, which achieve the same functionalities provided by the claimed configurations: alternative configurations of HE PHY and PPDUs, including HE SU PPDU, HE MU PPDU, HE ER SU PPDU and HE TB PPDU; alternative configurations of the packet types or formats, headers fields, parts and bits, including HE-SIG-A, HE-SIG-A1, HE-SIG-A1-R, HE-SIG-A2, HE-SIG-A2-R, HE-SIG-B, HE-STF, HE-LTF, L-STF, L-LTF, L-SIG, RL-SIG and PE; alternative configurations of frequency and channel bands and bandwidth divisions, subdivisions, subchannels and subcarriers; alternative configurations of the HE STA, pre-HE [de]modulated and HE [de]modulated fields, transmitter, receiver, encoder, decoder, modulator and demodulator, and alternative symbols and symbol configuration, in transmitting, receiving, encoding, modulating or generating, including for alternative configurations for SU and/or MU.
wherein the first set of header bits of the second header field is the same as the second set of header bits of the second header field, wherein the third set of header bits of the second header field is the same as the fourth set of header bits of the second header field,	The Accused Instrumentalities comprise wherein the first set of header bits of the second header field is the same as the second set of header bits of the second header field, wherein the third set of header bits of the second header field is the same as the fourth set of header bits of the second header field. For example, in Wi-Fi 6 devices, the first set of header bits of the second header field is the same as the second set of header bits of the second header field, wherein the third set of header bits of the second header field is the same as the fourth set of header bits of the second header field.

Claim 1	Wi-Fi 6 Accused Instrumentalities
	For example, the HE-SIG-A1 subfield (first set of header bits) has the same encoded bits as the HE-SIG-A1-R subfield (second set of header bits), and the HE-SIG-A2 subfield (third set of header bits) has the same encoded bits as the HE-SIG-A2-R (fourth set of header bits):[22] For an HE ER SU PPDU, the HE-SIG-A field is composed of four subfields: HE-SIG-A1, HE-SIG-A1-R, HE-SIG-A2, and HE-SIG-A2-R. Each subfield contains 26 data bits. These four subfields are transmitted sequentially from HE-SIG-A1 to HE-SIG-A2-R. The data bits of the HE-SIG-A1 and HE-SIG-A2 subfields shall be BCC encoded at rate $R = 1/2$, be interleaved, be mapped to a BPSK constellation, and have pilots inserted. The HE-SIG-A1-R subfield has the same encoded bits as the HE-SIG-A1 subfield, and the encoded bits shall be mapped to a QBPSK constellation without interleaving and have pilots inserted. The constellation mappings of the HE-SIG-A field in an HE ER SU PPDU are shown in Figure 27-25. The QBPSK constellation on the HE-SIG-A1-R subfield is used to differentiate between an HE ER SU PPDU and an HE MU PPDU when $m = 1$ in Equation (27-11). The HE-SIG-A2-R subfield has the same encoded bits as the HE-SIG-A2 subfield, and the encoded bits shall be mapped to a BPSK constellation without interleaving and have pilots inserted. BCC encoding, data interleaving, constellation mapping, and pilot insertion follow the steps described in 17.3.5.6, 27.3.12.8, 17.3.5.8, and 17.3.5.9, respectively. 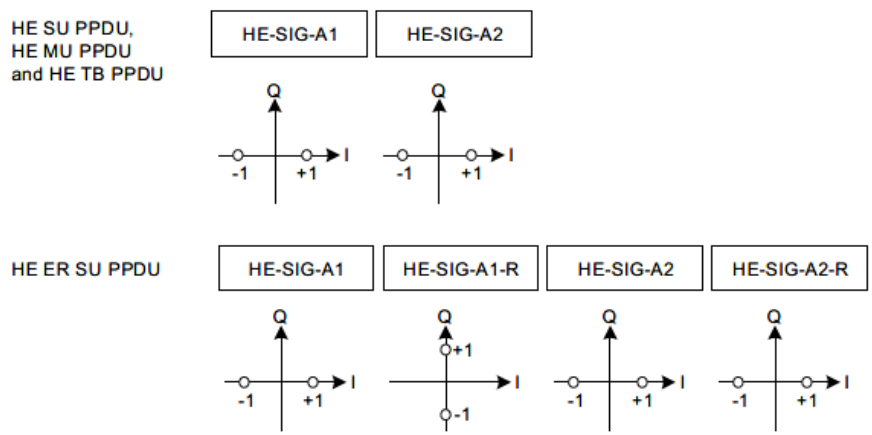 **Figure 27-25—Data subcarrier constellation of HE-SIG-A symbols**

[22] IEEE Std 802.11ax-2021, Sec. 27.3.11.7.4.

Claim 1	Wi-Fi 6 Accused Instrumentalities
	See also:[23] b) For an HE ER SU PPDU, the HE-SIG-A field consists of four subfields: HE-SIG-A1, HE-SIG-A1-R, HE-SIG-A2, and HE-SIG-A2-R. The HE-SIG-A1 and HE-SIG-A1-R subfields have the same data bits while the HE-SIG-A2 and HE-SIG-A2-R subfields have the same data bits as defined in 27.3.11.7. The HE-SIG-A field is constructed as follows: It is anticipated that discovery will provide further details of the manner of infringement of the Accused Instrumentalities. In addition, the foregoing structures may be implemented in alternative configurations and usages that are equivalent to this claim element. In addition, the foregoing structures may be implemented in alternative configurations and usages that are equivalent to this claim element because they perform substantially the same function of transmitting the packet type wherein the first set of header bits of the second header field is the same as the second set of header bits of the second header field, wherein the third set of header bits of the second header field is the same as the fourth set of header bits of the second header field, in substantially the same way of transmitting the packet type wherein the first set of header bits of the second header field is the same as the second set of header bits of the second header field, wherein the third set of header bits of the second header field is the same as the fourth set of header bits of the second header field, to obtain the same result of providing additional diversity, reducing data loss and increasing decoding accuracy. For example, alternative equivalent configurations include the following, separately or in conjunction, which achieve the same functionalities provided by the claimed configurations: alternative configurations of HE PHY and PPDUs, including HE SU PPDU, HE MU PPDU, HE ER SU PPDU and HE TB PPDU; alternative configurations of the packet types or formats, headers fields, parts and bits, including HE-SIG-A, HE-SIG-A1, HE-SIG-A1-R, HE-SIG-A2, HE-SIG-A2-R, HE-SIG-B, HE-STF, HE-LTF, L-STF, L-LTF, L-SIG, RL-SIG and PE; alternative configurations of frequency and channel bands and bandwidth divisions, subdivisions, subchannels and subcarriers; alternative configurations of the HE STA, pre-HE [de]modulated and

[23] IEEE Std 802.11ax-2021, Sec. 27.3.6.6.

Claim 1	Wi-Fi 6 Accused Instrumentalities
	HE [de]modulated fields, transmitter, receiver, encoder, decoder, modulator and demodulator, and alternative symbols and symbol configuration, in transmitting, receiving, encoding, modulating or generating, including for alternative configurations for SU and/or MU.
the encoder and the modulator further operable to generate a first OFDM symbol followed by a second OFDM symbol followed by a third OFDM symbol followed by a fourth OFDM symbol, wherein the first OFDM symbol is used to transmit the first part of the second header field, the second OFDM symbol is used to transmit the second part of the second header field, the third OFDM symbol is used to transmit the third part of the second header field, the fourth OFDM symbol is used to transmit the fourth part of the second header field,	The Accused Instrumentalities comprise the encoder and the modulator further operable to generate a first OFDM symbol followed by a second OFDM symbol followed by a third OFDM symbol followed by a fourth OFDM symbol, wherein the first OFDM symbol is used to transmit the first part of the second header field, the second OFDM symbol is used to transmit the second part of the second header field, the third OFDM symbol is used to transmit the third part of the second header field, the fourth OFDM symbol is used to transmit the fourth part of the second header field. For example, Wi-Fi 6 devices comprise the encoder and the modulator further operable to generate a first OFDM symbol followed by a second OFDM symbol followed by a third OFDM symbol followed by a fourth OFDM symbol, wherein the first OFDM symbol is used to transmit the first part of the second header field, the second OFDM symbol is used to transmit the second part of the second header field, the third OFDM symbol is used to transmit the third part of the second header field, the fourth OFDM symbol is used to transmit the fourth part of the second header field. This is indicated below:[24]

[24] IEEE Std 802.11ax-2021, Sec. 27.3.6.6.

Claim 1	Wi-Fi 6 Accused Instrumentalities
	b) For an HE ER SU PPDU, the HE-SIG-A field consists of four subfields: HE-SIG-A1, HE-SIG-A1-R, HE-SIG-A2, and HE-SIG-A2-R. The HE-SIG-A1 and HE-SIG-A1-R subfields have the same data bits while the HE-SIG-A2 and HE-SIG-A2-R subfields have the same data bits as defined in 27.3.11.7. The HE-SIG-A field is constructed as follows: 1) Obtain the HE-SIG-A fields from the TXVECTOR. Add the reserved bits, append the calculated CRC, and then append the N_{tail} tail bits as shown in 27.3.11.7. This results in 52 uncoded bits. 2) BCC encoder: Encode the data by a convolutional encoder at the rate $R = 1/2$ as described in 17.3.5.6. 3) BCC interleaver: Interleave the data bits of the HE-SIG-A1 and HE-SIG-A2 subfields as described in 27.3.12.8. The data bits of the HE-SIG-A1-R and HE-SIG-A2-R subfields are not interleaved. 4) Constellation mapper: BPSK modulate the HE-SIG-A1, HE-SIG-A2, and HE-SIG-A2-R data bits as described in 17.3.5.8 to form the first, third, and fourth OFDM symbol of the HE-SIG-A field, respectively. QBPSK modulate the HE-SIG-A1-R encoded data bits to form the second OFDM symbol of the HE-SIG-A field. See also:[25]

[25] IEEE Std 802.11ax-2021, Sec. 27.3.11.7.4.

Claim 1	Wi-Fi 6 Accused Instrumentalities
	For an HE ER SU PPDU, the HE-SIG-A field is composed of four subfields: HE-SIG-A1, HE-SIG-A1-R, HE-SIG-A2, and HE-SIG-A2-R. Each subfield contains 26 data bits. These four subfields are transmitted sequentially from HE-SIG-A1 to HE-SIG-A2-R. The data bits of the HE-SIG-A1 and HE-SIG-A2 subfields shall be BCC encoded at rate $R = 1/2$, be interleaved, be mapped to a BPSK constellation, and have pilots inserted. The HE-SIG-A1-R subfield has the same encoded bits as the HE-SIG-A1 subfield, and the encoded bits shall be mapped to a QBPSK constellation without interleaving and have pilots inserted. The constellation mappings of the HE-SIG-A field in an HE ER SU PPDU are shown in Figure 27-25. The QBPSK constellation on the HE-SIG-A1-R subfield is used to differentiate between an HE ER SU PPDU and an HE MU PPDU when $m = 1$ in Equation (27-11). The HE-SIG-A2-R subfield has the same encoded bits as the HE-SIG-A2 subfield, and the encoded bits shall be mapped to a BPSK constellation without interleaving and have pilots inserted. BCC encoding, data interleaving, constellation mapping, and pilot insertion follow the steps described in 17.3.5.6, 27.3.12.8, 17.3.5.8, and 17.3.5.9, respectively. 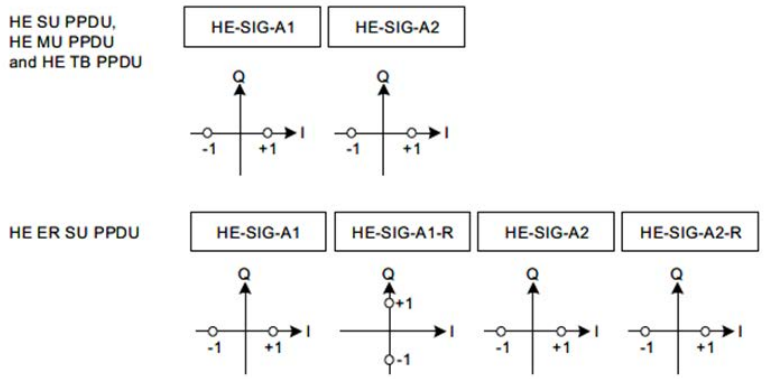 **Figure 27-25—Data subcarrier constellation of HE-SIG-A symbols** It is anticipated that discovery will provide further details of the manner of infringement of the Accused Instrumentalities. In addition, the foregoing structures may be implemented in alternative configurations and usages that are equivalent to this claim element. In addition, the foregoing structures may be implemented in alternative configurations and usages that are equivalent to this claim element because they perform substantially the same function of generating a first OFDM symbol followed by a second OFDM symbol followed by a third OFDM symbol followed by a fourth OFDM symbol, wherein the first OFDM symbol is used to transmit

Claim 1	Wi-Fi 6 Accused Instrumentalities
	the first part of the second header field, the second OFDM symbol is used to transmit the second part of the second header field, the third OFDM symbol is used to transmit the third part of the second header field, the fourth OFDM symbol is used to transmit the fourth part of the second header field, in substantially the same way of generating a first OFDM symbol followed by a second OFDM symbol followed by a third OFDM symbol followed by a fourth OFDM symbol, wherein the first OFDM symbol is used to transmit the first part of the second header field, the second OFDM symbol is used to transmit the second part of the second header field, the third OFDM symbol is used to transmit the third part of the second header field, the fourth OFDM symbol is used to transmit the fourth part of the second header field, to obtain the same result of providing additional diversity, reducing data loss and increasing decoding accuracy. For example, alternative equivalent configurations include the following, separately or in conjunction, which achieve the same functionalities provided by the claimed configurations: alternative configurations of HE PHY and PPDUs, including HE SU PPDU, HE MU PPDU, HE ER SU PPDU and HE TB PPDU; alternative configurations of the packet types or formats, headers fields, parts and bits, including HE-SIG-A, HE-SIG-A1, HE-SIG-A1-R, HE-SIG-A2, HE-SIG-A2-R, HE-SIG-B, HE-STF, HE-LTF, L-STF, L-LTF, L-SIG, RL-SIG and PE; alternative configurations of frequency and channel bands and bandwidth divisions, subdivisions, subchannels and subcarriers; alternative configurations of the HE STA, pre-HE [de]modulated and HE [de]modulated fields, transmitter, receiver, encoder, decoder, modulator and demodulator, and alternative symbols and symbol configuration, in transmitting, receiving, encoding, modulating or generating, including for alternative configurations for SU and/or MU.
wherein the second set of header bits of the second header field transmitted using the second OFDM symbol are transmitted in a different order than the first set of header bits of the second header field transmitted using the first OFDM symbol,	The Accused Instrumentalities comprise wherein the second set of header bits of the second header field transmitted using the second OFDM symbol are transmitted in a different order than the first set of header bits of the second header field transmitted using the first OFDM symbol. For example, in Wi-Fi 6 devices, the second set of header bits of the second header field transmitted using the second OFDM symbol are transmitted in a different order than the first set of header bits of the second header field transmitted using the first OFDM symbol.

Claim 1	Wi-Fi 6 Accused Instrumentalities
	For example, the bits of HE-SIG-A1-R are not interleaved, whereas the bits of HE-SIG-A1 are interleaved. This is indicated below:[26] b) For an HE ER SU PPDU, the HE-SIG-A field consists of four subfields: HE-SIG-A1, HE-SIG-A1-R, HE-SIG-A2, and HE-SIG-A2-R. The HE-SIG-A1 and HE-SIG-A1-R subfields have the same data bits while the HE-SIG-A2 and HE-SIG-A2-R subfields have the same data bits as defined in 27.3.11.7. The HE-SIG-A field is constructed as follows: 1) Obtain the HE-SIG-A fields from the TXVECTOR. Add the reserved bits, append the calculated CRC, and then append the N_{tail} tail bits as shown in 27.3.11.7. This results in 52 uncoded bits. 2) BCC encoder: Encode the data by a convolutional encoder at the rate $R = 1/2$ as described in 17.3.5.6. 3) BCC interleaver: Interleave the data bits of the HE-SIG-A1 and HE-SIG-A2 subfields as described in 27.3.12.8. The data bits of the HE-SIG-A1-R and HE-SIG-A2-R subfields are not interleaved. Interleaving the bits of HE-SIG-A1 and not interleaving the bits of HE-SIG-A1-R results in a different transmission order of bits as between HE-SIG-A1 and HE-SIG-A1-R. See also:[27]

[26] IEEE Std 802.11ax-2021, Sec. 27.3.6.6.

[27] IEEE Std 802.11ax-2021, Sec. 27.3.12.8.

Claim 1	Wi-Fi 6 Accused Instrumentalities
	27.3.12.8 BCC interleavers For ease of explanation, the operation of the interleaver is described only for the SU case. For user u of an MU transmission, the interleaver operates in the same way on the output bits for the user from the stream parser by replacing N_{SS}, N_{CBPSS}, N_{CBPS}, and N_{BPSCS} with $N_{SS,u}$, $N_{CBPSS,u}$, $N_{CBPS,u}$ and $N_{BPSCS,u}$, respectively. That is, the operation of the interleaver is the same as if the transmission were an SU one, consisting of bits from only that user. The BCC interleaver operation is specified in 21.3.10.8. The interleaver parameters, N_{COL}, N_{ROW}, and N_{ROT}, for the Data field depend on the RU size and whether or not DCM is used and are defined in the "RU size" column of Table 27-35. (cont.)

Claim 1	Wi-Fi 6 Accused Instrumentalities

Table 27-35—BCC interleaver parameters

DCM	Parameter	RU size (tones)				HE-SIG-A/ HE-SIG-B (tones)
		26	52	106	242	56
Not used	N_{COL}	8	16	17	26	13
	N_{ROW}	$3 \times N_{BPSCS}$	$3 \times N_{BPSCS}$	$6 \times N_{BPSCS}$	$9 \times N_{BPSCS}$	$4 \times N_{BPSCS}$
	N_{ROT}	2	11	29	58	—
Used	N_{COL}	4	8	17	13	13
	N_{ROW}	$3 \times N_{BPSCS}$	$3 \times N_{BPSCS}$	$3 \times N_{BPSCS}$	$9 \times N_{BPSCS}$	$2 \times N_{BPSCS}$
	N_{ROT}	2	2	11	29	—

The interleaver parameters, N_{COL} and N_{ROW}, for the HE-SIG-A and HE-SIG-B fields are defined in the "HE-SIG-A/HE-SIG-B" column of Table 27-35.

NOTE—DCM is not used on the HE-SIG-A field.

Claim 1	Wi-Fi 6 Accused Instrumentalities
	See also:[28] **21.3.10.8 BCC interleaver** For ease of explanation, the operation of the interleaver is described for the SU case. For user u of an MU transmission, the interleaver operates in the same way on the output bits for the user from the stream parser by replacing N_{SS}, N_{CBPSS}, N_{CBPSSI}, and N_{BPSCS} with $N_{SS,u}$, $N_{CBPSS,u}$, $N_{CBPSSI,u}$, and $N_{BPSCS,u}$, respectively. That is, the operation of the interleaver is the same as if the transmission were an SU one, consisting of bits from only that user. This subclause describes the interleaver used in the case of BCC encoding. The interleaver described in this subclause shall be bypassed in the case of LDPC encoding. In a 20 MHz, 40 MHz, or 80 MHz VHT PPDU transmission, the bits at the output of the stream parser are processed in groups of N_{CBPS} bits. Each of these groups is divided into N_{SS} blocks of N_{CBPSS} bits, and each block shall be interleaved by an interleaver based on the Clause 17 interleaver. In a 160 MHz or an 80+80 MHz VHT PPDU transmission, each frequency subblock of $N_{CBPSS}/2$ output bits from the segment parser is interleaved by the interleaver for 80 MHz defined in this subclause. This interleaver, which is based on entering the data in rows, and reading it out in columns, has a different number of columns N_{COL} and rows N_{ROW} for different bandwidths. The values of N_{COL} and N_{ROW} are given in Table 21-17. **Table 21-17—Number of rows and columns in the interleaver** Parameter: 20 MHz / 40 MHz / 80 MHz N_{COL}: 13 / 18 / 26 N_{ROW}: $4 \times N_{BPSCS}$ / $6 \times N_{BPSCS}$ / $9 \times N_{BPSCS}$ N_{ROT} ($N_{SS} \leq 4$): 11 / 29 / 58 N_{ROT} ($N_{SS} > 4$): 6 / 13 / 28

[28] IEEE Std 802.11-2020, Sec. 21.3.10.8.

Claim 1	Wi-Fi 6 Accused Instrumentalities
	(cont.) After the operations based on the Clause 17 interleaver have been applied and if more than one spatial stream exists, a third operation called *frequency rotation* is applied to the additional spatial streams. The parameter for the frequency rotation is N_{ROT}. The values of N_{ROT} are given in Table 21-17. An additional parameter is the spatial stream index $i_{SS} = 1, 2, \ldots, N_{SS}$. The output of the third operation is a function of the spatial stream index. The interleaving is defined using three permutations. The first permutation is given by the rule shown in Equation (21-76). $$i = N_{ROW}(k \bmod N_{COL}) + \left\lfloor \frac{k}{N_{COL}} \right\rfloor, k = 0, 1, \ldots, N_{CBPSSI} - 1 \quad (21\text{-}76)$$ The second permutation is defined by the rule shown in Equation (21-77). $$j = s\left\lfloor \frac{i}{s} \right\rfloor + \left(i + N_{CBPSSI} - \left\lfloor \frac{N_{COL} \cdot i}{N_{CBPSSI}} \right\rfloor\right) \bmod s, \quad i = 0, 1, \ldots, N_{CBPSSI} - 1 \quad (21\text{-}77)$$ where s is defined in Equation (21-68)

Claim 1	Wi-Fi 6 Accused Instrumentalities
	(cont.) If $2 \le N_{SS} \le 4$, a frequency rotation is applied to the output of the second permutation as shown in Equation (21-78). $$r = \left\{ j - \left[(2(i_{SS} - 1)) \bmod 3 + 3 \left\lfloor \frac{i_{SS} - 1}{3} \right\rfloor \right] \cdot N_{ROT} \cdot N_{BPSCS} \right\} \bmod N_{CBPSSI}, \quad (21\text{-}78)$$ $$j = 0, 1, \ldots, N_{CBPSSI} - 1$$ where $i_{SS} = 1, 2, \ldots, N_{SS}$ is the spatial steam index on which this interleaver is operating If $N_{SS} > 4$, a frequency rotation is applied to the output of the second permutation as shown in Equation (21-79). $$r = \{ j - J(i_{SS}) \cdot N_{ROT} \cdot N_{BPSCS} \} \bmod N_{CBPSSI}, j = 0, 1, \ldots, N_{CBPSSI} - 1 \quad (21\text{-}79)$$ where $i_{SS} = 1, 2, \ldots, N_{SS}$ is the spatial steam index on which this interleaver is operating, and $J(i_{SS})$ is an integer as defined in Table 21-18.

Claim 1	Wi-Fi 6 Accused Instrumentalities
	(cont.) **Table 21-18—$J(i_{SS})$ values** i_{SS} / $J(i_{SS})$ 1 / 0 2 / 5 3 / 2 4 / 7 5 / 3 6 / 6 7 / 1 8 / 4

Claim 1	Wi-Fi 6 Accused Instrumentalities
	Interleaving is a three-step permutation process that begins with interleaving using an interleaver based on the "Clause 17 interleaver," as indicated above. Per Clause 17, interleaving is performed separately for every OFDM symbol. The first permutation causes adjacent coded bits to be mapped onto nonadjacent subcarriers. The second causes adjacent coded bits to be mapped alternately onto less and more significant constellation bits:[29] **17.3.5.7 Data interleaving** All encoded data bits shall be interleaved by a block interleaver with a block size corresponding to the number of bits in a single OFDM symbol, N_{CBPS}. The interleaver is defined by a two-step permutation. The first permutation causes adjacent coded bits to be mapped onto nonadjacent subcarriers. The second causes adjacent coded bits to be mapped alternately onto less and more significant bits of the constellation and, thereby, long runs of low reliability (LSB) bits are avoided. As further indicated above, after the operations based on the Clause 17 interleaver have been applied, and if more than one spatial stream exists, a third operation called frequency rotation is applied to the additional spatial stream. The purpose of the interleaver, as indicated above, is to process OFDM symbols such that adjacent bits are not associated with a single subcarrier or adjacent subcarriers. Instead, adjacent bits are permuted onto nonadjacent subcarriers and onto more or less significant bits, i.e., reordered. It is anticipated that discovery will provide further details of the manner of infringement of the Accused Instrumentalities. In addition, the foregoing structures may be implemented in alternative configurations and usages that are equivalent to this claim element. In addition, the foregoing structures may be implemented in alternative configurations and usages that are equivalent to this claim element because they perform substantially the same function of transmitting the second set of header bits of the second header field using the second OFDM symbol in a different order than the first set of header bits of the second header field transmitted using the first OFDM symbol, in substantially the same way of transmitting the second set of header bits of

[29] IEEE Std 802.11-2020, Sec. 17.3.5.7.

Claim 1	Wi-Fi 6 Accused Instrumentalities
	the second header field using the second OFDM symbol in a different order than the first set of header bits of the second header field transmitted using the first OFDM symbol, to obtain the same result of providing additional diversity, reducing data loss and increasing decoding accuracy. For example, alternative equivalent configurations include the following, separately or in conjunction, which achieve the same functionalities provided by the claimed configurations: alternative configurations of HE PHY and PPDUs, including HE SU PPDU, HE MU PPDU, HE ER SU PPDU and HE TB PPDU; alternative configurations of the packet types or formats, headers fields, parts and bits, including HE-SIG-A, HE-SIG-A1, HE-SIG-A1-R, HE-SIG-A2, HE-SIG-A2-R, HE-SIG-B, HE-STF, HE-LTF, L-STF, L-LTF, L-SIG, RL-SIG and PE; alternative configurations of frequency and channel bands and bandwidth divisions, subdivisions, subchannels and subcarriers; alternative configurations of the HE STA, pre-HE [de]modulated and HE [de]modulated fields, transmitter, receiver, encoder, decoder, modulator and demodulator, and alternative symbols and symbol configuration, in transmitting, receiving, encoding, modulating or generating, including for alternative configurations for SU and/or MU.
wherein the fourth set of header bits of the second header field transmitted using the fourth OFDM symbol are transmitted in a different order than the third set of header bits of the second header field transmitted using the third OFDM symbol, and	The Accused Instrumentalities comprise wherein the fourth set of header bits of the second header field transmitted using the fourth OFDM symbol are transmitted in a different order than the third set of header bits of the second header field transmitted using the third OFDM symbol. For example, Wi-Fi 6 devices comprise wherein the fourth set of header bits of the second header field transmitted using the fourth OFDM symbol are transmitted in a different order than the third set of header bits of the second header field transmitted using the third OFDM symbol. For example, the bits of HE-SIG-A2-R are not interleaved, whereas the bits of HE-SIG-A2 are interleaved. This is indicated below:[30]

[30] IEEE Std 802.11ax-2021, Sec. 27.3.6.6.

Claim 1	Wi-Fi 6 Accused Instrumentalities
	b) For an HE ER SU PPDU, the HE-SIG-A field consists of four subfields: HE-SIG-A1, HE-SIG-A1-R, HE-SIG-A2, and HE-SIG-A2-R. The HE-SIG-A1 and HE-SIG-A1-R subfields have the same data bits while the HE-SIG-A2 and HE-SIG-A2-R subfields have the same data bits as defined in 27.3.11.7. The HE-SIG-A field is constructed as follows: 1) Obtain the HE-SIG-A fields from the TXVECTOR. Add the reserved bits, append the calculated CRC, and then append the N_{tail} tail bits as shown in 27.3.11.7. This results in 52 uncoded bits. 2) BCC encoder: Encode the data by a convolutional encoder at the rate $R = 1/2$ as described in 17.3.5.6. 3) BCC interleaver: Interleave the data bits of the HE-SIG-A1 and HE-SIG-A2 subfields as described in 27.3.12.8. The data bits of the HE-SIG-A1-R and HE-SIG-A2-R subfields are not interleaved. Interleaving the bits of HE-SIG-A2 and not interleaving the bits of HE-SIG-A2-R results in a different transmission order of bits as between HE-SIG-A2 and HE-SIG-A2-R. It is anticipated that discovery will provide further details of the manner of infringement of the Accused Instrumentalities. In addition, the foregoing structures may be implemented in alternative configurations and usages that are equivalent to this claim element. In addition, the foregoing structures may be implemented in alternative configurations and usages that are equivalent to this claim element because they perform substantially the same function of transmitting the fourth set of header bits of the second header field using the fourth OFDM symbol in a different order than the third set of header bits of the second header field transmitted using the third OFDM symbol, in substantially the same way of transmitting the fourth set of header bits of the second header field using the fourth OFDM symbol in a different order than the third set of header bits of the second header field transmitted using the third OFDM symbol, to obtain the same result of providing additional diversity, reducing data loss and increasing decoding accuracy. For example, alternative equivalent configurations include the following, separately or in conjunction, which achieve the same functionalities provided by the claimed configurations: alternative configurations of HE PHY and PPDUs, including HE SU PPDU, HE

Claim 1	Wi-Fi 6 Accused Instrumentalities
	MU PPDU, HE ER SU PPDU and HE TB PPDU; alternative configurations of the packet types or formats, headers fields, parts and bits, including HE-SIG-A, HE-SIG-A1, HE-SIG-A1-R, HE-SIG-A2, HE-SIG-A2-R, HE-SIG-B, HE-STF, HE-LTF, L-STF, L-LTF, L-SIG, RL-SIG and PE; alternative configurations of frequency and channel bands and bandwidth divisions, subdivisions, subchannels and subcarriers; alternative configurations of the HE STA, pre-HE [de]modulated and HE [de]modulated fields, transmitter, receiver, encoder, decoder, modulator and demodulator, and alternative symbols and symbol configuration, in transmitting, receiving, encoding, modulating or generating, including for alternative configurations for SU and/or MU.
the wireless OFDM communications transmitter further operable to transmit the second packet type over the wireless communication channel.	The Accused Instrumentalities comprise the wireless OFDM communications transmitter further operable to transmit the second packet type over the wireless communication channel. For example, Wi-Fi 6 devices comprise the wireless OFDM communications transmitter further operable to transmit the second packet type over the wireless communication channel. For example, Wi-Fi 6 comprises high-efficiency stations (HE STAs) capable of transmitting PPDUs including the HE ER SU PPDU via 2.4, 5, and 6 Ghz channels. The HE STAs are further capable of "[t]ransmission and reception of an HE ER SU PPDU that consists of a 242-tone RU spanning the entire primary 20 MHz PPDU bandwidth."[31] This is indicated below:[32]

[31] IEEE Std 802.11ax-2021, Sec. 27.1.1

[32] IEEE Std 802.11ax-2021, Sec. 27.1.1.

Claim 1	Wi-Fi 6 Accused Instrumentalities
	27. High-efficiency (HE) PHY specification **27.1 Introduction** **27.1.1 Introduction to the HE PHY** Clause 27 specifies the PHY entity for a high-efficiency (HE) orthogonal frequency division multiplexing (OFDM) system. In addition to the requirements in Clause 27, an HE STA shall be capable of transmitting and receiving PPDUs that are compliant with the mandatory requirements of the following PHY specifications: — Clause 19 and Clause 21 if the HE STA supports an operating channel width greater than or equal to 80 MHz and is operating in the 5 GHz band. — Clause 19 and Clause 21 transmission and reception on 20 MHz channel width (see 26.17.1) if the HE STA is a 20 MHz-only non-AP HE STA and is operating in the 5 GHz band. — Clause 19 if the HE STA is operating in the 2.4 GHz band. — Clause 17 if the HE STA is operating in the 6 GHz band. For 2.4 GHz band operation, the HE PHY is based on HT PHY defined in Clause 19, which in turn is based on the OFDM PHY defined in Clause 17. For 5 GHz band operation, the HE PHY is based on the VHT PHY defined in Clause 21, which in turn is based on the HT PHY defined in Clause 19, which in turn is further based on the OFDM PHY defined in Clause 17. For 6 GHz band operation, the HE PHY is based on the OFDM PHY defined in Clause 17. See also :[33]

[33] IEEE Std 802.11ax-2021, Sec. 27.1.1.

Claim 1	Wi-Fi 6 Accused Instrumentalities
	The HE PHY provides support for midambles. Midambles facilitate updating of the channel estimate during HE PPDU reception and might be of use in high mobility scenarios that often result in significant variations of the wireless channel over the duration of a PPDU. An HE STA shall support the following features: — Transmission and reception of an HE SU PPDU that consists of a single RU spanning the entire PPDU bandwidth. — Transmission and reception of an HE ER SU PPDU that consists of a 242-tone RU spanning the entire primary 20 MHz PPDU bandwidth. It is anticipated that discovery will provide further details of the manner of infringement of the Accused Instrumentalities. In addition, the foregoing structures may be implemented in alternative configurations and usages that are equivalent to this claim element. In addition, the foregoing structures may be implemented in alternative configurations and usages that are equivalent to this claim element because they perform substantially the same function of transmitting the second packet type over the wireless communication channel, in substantially the same way of transmitting the second packet type over the wireless communication channel, to obtain the same result of providing additional diversity, reducing data loss and increasing decoding accuracy. For example, alternative equivalent configurations include the following, separately or in conjunction, which achieve the same functionalities provided by the claimed configurations: alternative configurations of HE PHY and PPDUs, including HE SU PPDU, HE MU PPDU, HE ER SU PPDU and HE TB PPDU; alternative configurations of the packet types or formats, headers fields, parts and bits, including HE-SIG-A, HE-SIG-A1, HE-SIG-A1-R, HE-SIG-A2, HE-SIG-A2-R, HE-SIG-B, HE-STF, HE-LTF, L-STF, L-LTF, L-SIG, RL-SIG and PE; alternative configurations of frequency and channel bands and bandwidth divisions, subdivisions, subchannels and subcarriers; alternative configurations of the HE STA, pre-HE [de]modulated and HE [de]modulated fields, transmitter, receiver, encoder, decoder, modulator and demodulator, and

<table>
<tr><th>Claim 1</th><th>Wi-Fi 6 Accused Instrumentalities</th></tr>
<tr><td></td><td>alternative symbols and symbol configuration, in transmitting, receiving, encoding, modulating or generating, including for alternative configurations for SU and/or MU.</td></tr>
<tr><td>wherein the first channel bandwidth is at least two times wider than the second channel bandwidth.</td><td>The Accused Instrumentalities comprise wherein the first channel bandwidth is at least two times wider than the second channel bandwidth.

For example, Wi-Fi 6 devices comprise wherein the first channel bandwidth is at least two times wider than the second channel bandwidth.

For example, the channel bandwidth for the HE SU PPDU is at least two times wider than the channel bandwidth for the HE ER SU PPDU. This is indicated below:[34]

Table 27-18—HE-SIG-A field of an HE SU PPDU and HE ER SU PPDU (continued)
<table>
<tr><th>Bit</th><th>Field</th><th>Number of bits</th><th>Description</th></tr>
<tr><td>B14</td><td>Reserved</td><td>1</td><td>Reserved and set to 1.</td></tr>
<tr><td>B15–B18</td><td>Spatial Reuse</td><td>4</td><td>Indicates whether spatial reuse modes are allowed during the transmission of this PPDU:
Set to a value from Table 27-22 (see 26.11.6 and 26.10).</td></tr>
<tr><td>B19–B20</td><td>Bandwidth</td><td>2</td><td>For an HE SU PPDU:
Set to 0 for 20 MHz.
Set to 1 for 40 MHz.
Set to 2 for 80 MHz.
Set to 3 for 160 MHz and 80+80 MHz.

For an HE ER SU PPDU:
Set to 0 for 242-tone RU.
Set to 1 for upper frequency 106-tone RU within the primary 20 MHz.
Values 2 and 3 are reserved.</td></tr>
</table></td></tr>
</table>

[34] IEEE Std 802.11ax-2021, Sec. 27.3.11.7.2.

Claim 1	Wi-Fi 6 Accused Instrumentalities
	It is anticipated that discovery will provide further details of the manner of infringement of the Accused Instrumentalities. In addition, the foregoing structures may be implemented in alternative configurations and usages that are equivalent to this claim element. In addition, the foregoing structures may be implemented in alternative configurations and usages that are equivalent to this claim element because they perform substantially the same function of wherein the first channel bandwidth is at least two times wider than the second channel bandwidth, in substantially the same way of wherein the first channel bandwidth is at least two times wider than the second channel bandwidth to obtain the same result of providing additional diversity thereby increasing the likelihood of decoding the header information correctly. For example, alternative equivalent configurations include the following, separately or in conjunction, which achieve the same functionalities provided by the claimed configurations: alternative configurations of HE PHY and PPDUs, including HE SU PPDU, HE MU PPDU, HE ER SU PPDU and HE TB PPDU; alternative configurations of the packet types or formats, headers fields, parts and bits, including HE-SIG-A, HE-SIG-A1, HE-SIG-A1-R, HE-SIG-A2, HE-SIG-A2-R, HE-SIG-B, HE-STF, HE-LTF, L-STF, L-LTF, L-SIG, RL-SIG and PE; alternative configurations of frequency and channel bands and bandwidth divisions, subdivisions, subchannels and subcarriers; alternative configurations of the HE STA, pre-HE [de]modulated and HE [de]modulated fields, transmitter, receiver, encoder, decoder, modulator and demodulator, and alternative symbols and symbol configuration, in transmitting, receiving, encoding, modulating or generating, including for alternative configurations for SU and/or MU.

Appendix H
Claim Chart for U.S. Patent No. 10,291,449

Claim 2	Wi-Fi 6 Accused Instrumentalities
The wireless transceiver of claim 1, wherein the transmission of the same header bits in the second OFDM symbol provides diversity to increase a likelihood of correctly communicating header information of the second packet type.	The Accused Instrumentalities comprise a wireless transceiver wherein the transmission of the same header bits in the second OFDM symbol provides diversity to increase a likelihood of correctly communicating header information of the second packet type. For example, Wi-Fi 6 devices comprise a wireless transceiver wherein the transmission of the same header bits in the second OFDM symbol provides diversity to increase a likelihood of correctly communicating header information of the second packet type. This is indicated below:[35] **Sept 2015** **doc.: IEEE 802.11-15/0826r2** **HE-SIGA transmission for range extension** **Date:** 2015-07-12

[35]September 2015 Working Group Comments, IEEE Std 802.11-15/0826r2.

Claim 2	Wi-Fi 6 Accused Instrumentalities
	Transmitter of HE-SIG-A • **We propose to use the time repetition and bypassing the bit interleaver of repeated HE-SIG-A symbols to enhance robustness of HE-SIG-A in outdoor scenarios.** 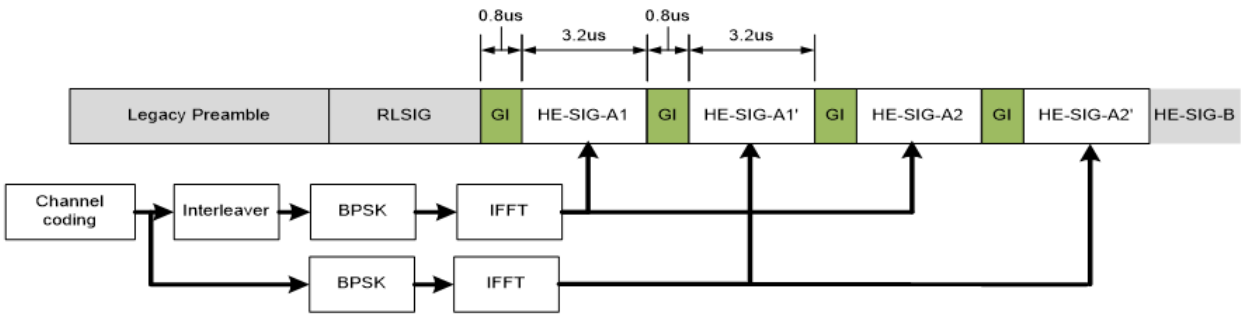

Claim 2	Wi-Fi 6 Accused Instrumentalities
	Conclusion • **Repeated HE-SIGA is needed in many use cases including range extension and outdoor channel operation.** • **An implementation friendly repetition method is proposed to harvest the frequency diversity gain.** The Accused Instrumentalities comprise a wireless transceiver wherein the transmission of the same header bits in the second OFDM symbol provides diversity to increase a likelihood of correctly communicating header information of the second packet type. For example, Wi-Fi 6 devices comprise a wireless transceiver wherein the transmission of the same header bits in the second OFDM symbol provides diversity to increase a likelihood of correctly communicating header information of the second packet type. This is indicated below:[36]

[36]September 2015 Working Group Comments, IEEE Std 802.11-15/0826r2

Claim 2	Wi-Fi 6 Accused Instrumentalities
	Sept 2015 **doc.: IEEE 802.11-15/0826r2** **HE-SIGA transmission for range extension** **Date:** 2015-07-12 **Transmitter of HE-SIG-A** • **We propose to use the time repetition and bypassing the bit interleaver of repeated HE-SIG-A symbols to enhance robustness of HE-SIG-A in outdoor scenarios.** 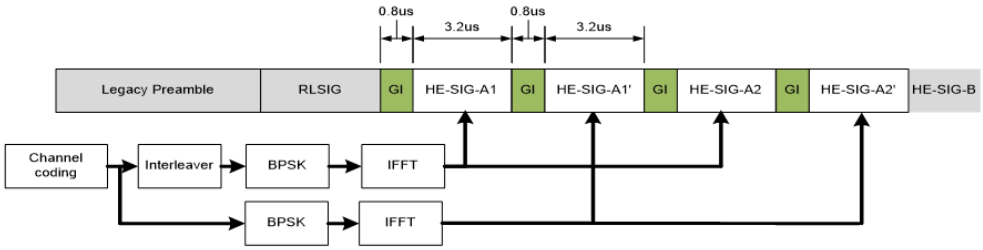

Claim 2	Wi-Fi 6 Accused Instrumentalities
	Conclusion • **Repeated HE-SIGA is needed in many use cases including range extension and outdoor channel operation.** • **An implementation friendly repetition method is proposed to harvest the frequency diversity gain.** These working group comments were adopted by the IEEE 802.11ax standard and are implemented by the Accused Instrumentalities. This is indicated below:[37] Example transmitter block diagrams are shown in Figure 27-13 to Figure 27-22. The actual structure of the transmitter is implementation dependent. In particular, Figure 27-13 shows the transmit process for the L-SIG, RL-SIG, and HE-SIG-A fields of an HE PPDU using one frequency segment when the Beam Change subfield in the HE-SIG-A field is 1. These transmit blocks are also used to generate the L-STF and L-LTF fields of the HE PPDU when the Beam Change subfield in the HE-SIG-A field is 1, with the following exceptions: — The BCC encoder and interleaver and the constellation mapper are not used when generating the L-STF and L-LTF fields. — The BCC interleaver is not applied in the 2nd and the 4th OFDM symbols of the HE-SIG-A field in the HE ER SU PPDU.

[37] IEEE Std 802.11ax-2021, Sec. 27.3.5.

Claim 2	Wi-Fi 6 Accused Instrumentalities
	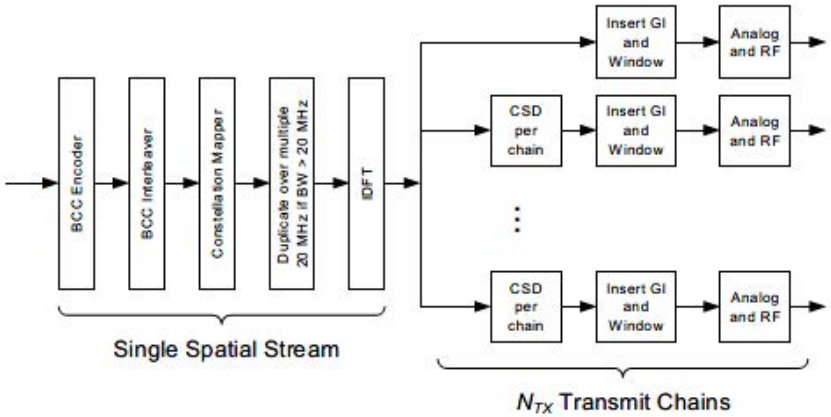 **Figure 27-13—Transmitter block diagram for L-SIG, RL-SIG, and HE-SIG-A fields for an HE SU PPDU and HE ER SU PPDU if Beam Change subfield is 1** It is anticipated that discovery will provide further details of the manner of infringement of the Accused Instrumentalities. In addition, the foregoing structures may be implemented in alternative configurations and usages that are equivalent to this claim element. In addition, the foregoing structures may be implemented in alternative configurations and usages that are equivalent to this claim element because they perform substantially the same function of transmission of the same header bits in the second OFDM symbol to provide diversity to increase a likelihood of correctly communicating header information of the second packet type, in substantially the same way of transmission of the same header bits in the second OFDM symbol to provide diversity to increase a likelihood of correctly communicating header information of the second packet type, to obtain the same result of providing additional diversity, reducing data loss and increasing decoding accuracy.

Appendix H
Claim Chart for U.S. Patent No. 10,291,449

Claim 2	Wi-Fi 6 Accused Instrumentalities
	For example, alternative equivalent configurations include the following, separately or in conjunction, which achieve the same functionalities provided by the claimed configurations: alternative configurations of HE PHY and PPDUs, including HE SU PPDU, HE MU PPDU, HE ER SU PPDU and HE TB PPDU; alternative configurations of the packet types or formats, headers fields, parts and bits, including HE-SIG-A, HE-SIG-A1, HE-SIG-A1-R, HE-SIG-A2, HE-SIG-A2-R, HE-SIG-B, HE-STF, HE-LTF, L-STF, L-LTF, L-SIG, RL-SIG and PE; alternative configurations of frequency and channel bands and bandwidth divisions, subdivisions, subchannels and subcarriers; alternative configurations of the HE STA, pre-HE [de]modulated and HE [de]modulated fields, transmitter, receiver, encoder, decoder, modulator and demodulator, and alternative symbols and symbol configuration, in transmitting, receiving, encoding, modulating or generating, including for alternative configurations for SU and/or MU.

Appendix H
Claim Chart for U.S. Patent No. 10,291,449

Claim 3	Wi-Fi 6 Accused Instrumentalities
The wireless transceiver of claim 1, wherein the transmission of the same header bits in the fourth OFDM symbol provides diversity to increase a likelihood of correctly communicating header information of the second packet type.	The Accused Instrumentalities comprise a wireless transceiver wherein the transmission of the same header bits in the fourth OFDM symbol provides diversity to increase a likelihood of correctly communicating header information of the second packet type. For example, Wi-Fi 6 devices comprise a wireless transceiver wherein the transmission of the same header bits in the fourth OFDM symbol provides diversity to increase a likelihood of correctly communicating header information of the second packet type. This is indicated below:[38]

[38]September 2015 Working Group Comments, IEEE Std 802.11-15/0826r2.

Claim 3	Wi-Fi 6 Accused Instrumentalities
	Sept 2015 **doc.: IEEE 802.11-15/0826r2** **HE-SIGA transmission for range extension** **Date:** 2015-07-12 **Transmitter of HE-SIG-A** • **We propose to use the time repetition and bypassing the bit interleaver of repeated HE-SIG-A symbols to enhance robustness of HE-SIG-A in outdoor scenarios.** 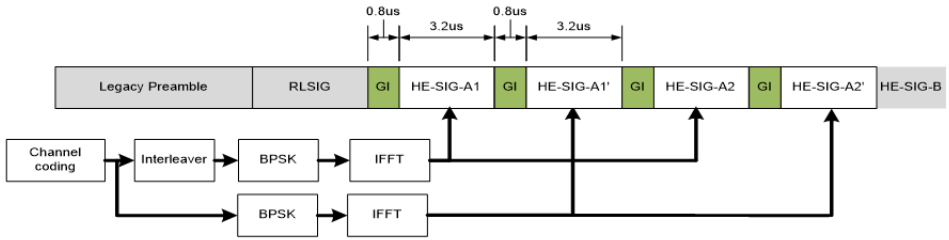

Claim 3	Wi-Fi 6 Accused Instrumentalities
	Conclusion • **Repeated HE-SIGA is needed in many use cases including range extension and outdoor channel operation.** • **An implementation friendly repetition method is proposed to harvest the frequency diversity gain.** The Accused Instrumentalities comprise a wireless transceiver wherein the transmission of the same header bits in the fourth OFDM symbol provides diversity to increase a likelihood of correctly communicating header information of the second packet type. For example, Wi-Fi 6 devices comprise a wireless transceiver wherein the transmission of the same header bits in the fourth OFDM symbol provides diversity to increase a likelihood of correctly communicating header information of the second packet type. This is indicated below:[39]

[39]September 2015 Working Group Comments, IEEE Std 802.11-15/0826r2

Claim 3	Wi-Fi 6 Accused Instrumentalities
	Sept 2015 **doc.: IEEE 802.11-15/0826r2** **HE-SIGA transmission for range extension** **Date:** 2015-07-12 **Transmitter of HE-SIG-A** • **We propose to use the time repetition and bypassing the bit interleaver of repeated HE-SIG-A symbols to enhance robustness of HE-SIG-A in outdoor scenarios.** 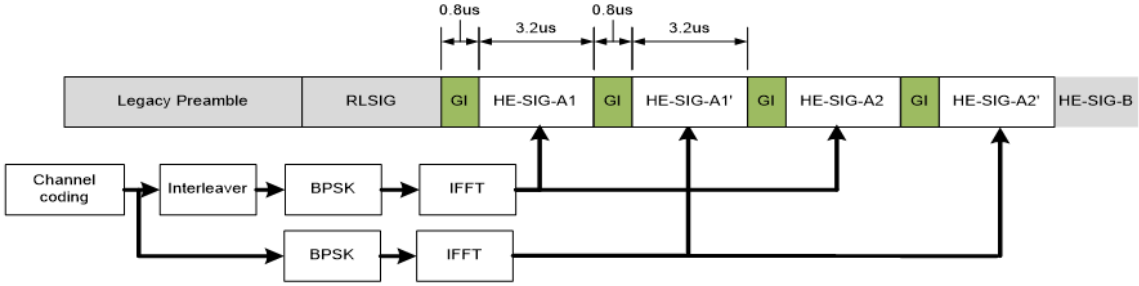

Claim 3	Wi-Fi 6 Accused Instrumentalities
	Conclusion • **Repeated HE-SIGA is needed in many use cases including range extension and outdoor channel operation.** • **An implementation friendly repetition method is proposed to harvest the frequency diversity gain.** These working group comments were adopted by the IEEE 802.11ax standard and are implemented by the Accused Instrumentalities. This is indicated below:[40] Example transmitter block diagrams are shown in Figure 27-13 to Figure 27-22. The actual structure of the transmitter is implementation dependent. In particular, Figure 27-13 shows the transmit process for the L-SIG, RL-SIG, and HE-SIG-A fields of an HE PPDU using one frequency segment when the Beam Change subfield in the HE-SIG-A field is 1. These transmit blocks are also used to generate the L-STF and L-LTF fields of the HE PPDU when the Beam Change subfield in the HE-SIG-A field is 1, with the following exceptions: — The BCC encoder and interleaver and the constellation mapper are not used when generating the L-STF and L-LTF fields. — The BCC interleaver is not applied in the 2nd and the 4th OFDM symbols of the HE-SIG-A field in the HE ER SU PPDU.

[40] IEEE Std 802.11ax-2021, Sec. 27.3.5.

Claim 3	Wi-Fi 6 Accused Instrumentalities
	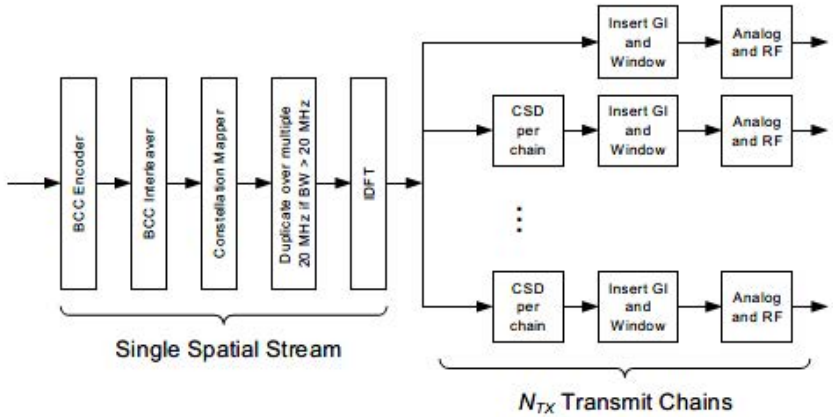 **Figure 27-13—Transmitter block diagram for L-SIG, RL-SIG, and HE-SIG-A fields for an HE SU PPDU and HE ER SU PPDU if Beam Change subfield is 1** It is anticipated that discovery will provide further details of the manner of infringement of the Accused Instrumentalities. In addition, the foregoing structures may be implemented in alternative configurations and usages that are equivalent to this claim element. In addition, the foregoing structures may be implemented in alternative configurations and usages that are equivalent to this claim element because they perform substantially the same function of transmission of the same header bits in the fourth OFDM symbol to provide diversity to increase a likelihood of correctly communicating header information of the second packet type, in substantially the same way of transmission of the same header bits in the fourth OFDM symbol to provide diversity to increase a likelihood of correctly communicating header information of the second packet type, to obtain the same result of providing additional diversity, reducing data loss and increasing decoding accuracy.

Appendix H
Claim Chart for U.S. Patent No. 10,291,449

Claim 3	Wi-Fi 6 Accused Instrumentalities
	For example, alternative equivalent configurations include the following, separately or in conjunction, which achieve the same functionalities provided by the claimed configurations: alternative configurations of HE PHY and PPDUs, including HE SU PPDU, HE MU PPDU, HE ER SU PPDU and HE TB PPDU; alternative configurations of the packet types or formats, headers fields, parts and bits, including HE-SIG-A, HE-SIG-A1, HE-SIG-A1-R, HE-SIG-A2, HE-SIG-A2-R, HE-SIG-B, HE-STF, HE-LTF, L-STF, L-LTF, L-SIG, RL-SIG and PE; alternative configurations of frequency and channel bands and bandwidth divisions, subdivisions, subchannels and subcarriers; alternative configurations of the HE STA, pre-HE [de]modulated and HE [de]modulated fields, transmitter, receiver, encoder, decoder, modulator and demodulator, and alternative symbols and symbol configuration, in transmitting, receiving, encoding, modulating or generating, including for alternative configurations for SU and/or MU.

Appendix H
Claim Chart for U.S. Patent No. 10,291,449

Claim 5	Wi-Fi 6 Accused Instrumentalities
The wireless transceiver of claim 1, wherein the wireless transceiver supports one or more wireless standards.	The Accused Instrumentalities comprise a wireless transceiver wherein the wireless transceiver supports one or more wireless standards. For example, the Accused Instrumentalities comprise a wireless transceiver that supports the IEEE 802.11ax standard, also known as WiFi 6. For example, Defendants advertise the Accused Instrumentalities as utilizing a Wi-Fi 6 or 802.11ax transceiver, such as a wireless card or modem, e.g., Wireless Intel Dual Band Wi-Fi 6 AX211 2x2 802.11ax 160MHz wireless card, and/or as Wi-Fi CERTIFIED 6.[41] [42]

[41] *See, e.g.*, https://www.dell.com/en-us/shop/dell-laptops/sr/laptops/wi-fi-6?appliedRefinements=37766 (search results for laptops filtered by "Wi-Fi 6"); https://www.dell.com/en-us/shop/desktop-computers/sr/desktops/wi-fi-6?appliedRefinements=38804 (search results for desktops filtered by "Wi-Fi 6"); and https://www.dell.com/en-us/shop/dell-laptops/latitude-3520-laptop/spd/latitude-15-3520-laptop/s061l3520us (showing "Intel Dual Band Wi-Fi 6 AX201 2x2 802.11ax 160MHz + Bluetooth 5.1" for "Wireless" for the Latitude 3520 Laptop).

[42] *See, e.g.*, https://www.hp.com/us-en/shop/sitesearch?keyword=wi-fi%206 (search results for products with keyword "Wi-Fi 6"); https://www.hp.com/us-en/shop/pdp/hp-spectre-x360-2-in-1-laptop-16-f1747nr (showing "Intel® Wi-Fi 6E AX211 (2x2)" for the "Wireless Technology" of HP Spectre x360 2-in-1 Laptop 16-f1747nr); https://www.hp.com/us-en/shop/pdp/hp-envy-desktop-te02-0250xt-pc-3y3r0av-1 (showing "Realtek Wi-Fi 6 (2x2)" for the "Wireless Technology" of HP ENVY Desktop TE02-0250xt PC).

Claim 5	Wi-Fi 6 Accused Instrumentalities
	The standard requires that 802.11ax products be capable of transmitting and receiving PPDUs that are compliant with the mandatory requirements of the PHY specifications as follows:[43] **27. High-efficiency (HE) PHY specification** **27.1 Introduction** **27.1.1 Introduction to the HE PHY** Clause 27 specifies the PHY entity for a high-efficiency (HE) orthogonal frequency division multiplexing (OFDM) system. In addition to the requirements in Clause 27, an HE STA shall be capable of transmitting and receiving PPDUs that are compliant with the mandatory requirements of the following PHY specifications: — Clause 19 and Clause 21 if the HE STA supports an operating channel width greater than or equal to 80 MHz and is operating in the 5 GHz band. — Clause 19 and Clause 21 transmission and reception on 20 MHz channel width (see 26.17.1) if the HE STA is a 20 MHz-only non-AP HE STA and is operating in the 5 GHz band. — Clause 19 if the HE STA is operating in the 2.4 GHz band. — Clause 17 if the HE STA is operating in the 6 GHz band. It is anticipated that discovery will provide further details of the manner of infringement of the Accused Instrumentalities. In addition, the foregoing structures may be implemented in alternative configurations and usages that are equivalent to this claim element. In addition, the foregoing structures may be implemented in alternative configurations and usages that are equivalent to this claim element because they perform substantially the same function of wherein the wireless transceiver supports one or more wireless standards, in substantially the same way of wherein the wireless transceiver supports one or more wireless standards to obtain the same

[43] IEEE Std 802.11ax-2021, Sec. 27.3.11.7.2

Claim 5	Wi-Fi 6 Accused Instrumentalities
	result of providing additional diversity thereby increasing the likelihood of decoding the header information correctly. For example, alternative equivalent configurations include the following, separately or in conjunction, which achieve the same functionalities provided by the claimed configurations: alternative configurations of HE PHY and PPDUs, including HE SU PPDU, HE MU PPDU, HE ER SU PPDU and HE TB PPDU; alternative configurations of the packet types or formats, headers fields, parts and bits, including HE-SIG-A, HE-SIG-A1, HE-SIG-A1-R, HE-SIG-A2, HE-SIG-A2-R, HE-SIG-B, HE-STF, HE-LTF, L-STF, L-LTF, L-SIG, RL-SIG and PE; alternative configurations of frequency and channel bands and bandwidth divisions, subdivisions, subchannels and subcarriers; alternative configurations of the HE STA, pre-HE [de]modulated and HE [de]modulated fields, transmitter, receiver, encoder, decoder, modulator and demodulator, and alternative symbols and symbol configuration, in transmitting, receiving, encoding, modulating or generating, including for alternative configurations for SU and/or MU.

<table>
<tr><th>Claim 7</th><th>Wi-Fi 6 Accused Instrumentalities</th></tr>
<tr><td>The wireless transceiver of claim 1, wherein the first header field indicates the type of packet.</td><td>

The Accused Instrumentalities comprise a wireless transceiver wherein the first header field indicates the type of packet. This is indicated below:[44]

27.3.11.7.2 Content

The HE-SIG-A field for an HE SU PPDU or an HE ER SU PPDU contains the fields listed in Table 27-18.

Table 27-18—HE-SIG-A field of an HE SU PPDU and HE ER SU PPDU

<table>
<tr><th>Bit</th><th>Field</th><th>Number of bits</th><th>Description</th></tr>
<tr><td colspan="4">HE-SIG-A1 subfield of HE-SIG-A field</td></tr>
<tr><td>B0</td><td>Format</td><td>1</td><td>Differentiate an HE SU PPDU and HE ER SU PPDU from an HE TB PPDU:
Set to 1 for an HE SU PPDU and HE ER SU PPDU.</td></tr>
</table>

It is anticipated that discovery will provide further details of the manner of infringement of the Accused Instrumentalities.

In addition, the foregoing structures may be implemented in alternative configurations and usages that are equivalent to this claim element.

In addition, the foregoing structures may be implemented in alternative configurations and usages that are equivalent to this claim element because they perform substantially the same function of indicating the type of packet, in substantially the same way of indicating using a header bit, to obtain the same result of providing additional diversity, reducing data loss and increasing decoding accuracy.

</td></tr>
</table>

[44] IEEE Std 802.11ax-2021, Sec. 27.3.11.7.2

	For example, alternative equivalent configurations include the following, separately or in conjunction, which achieve the same functionalities provided by the claimed configurations: alternative configurations of HE PHY and PPDUs, including HE SU PPDU, HE MU PPDU, HE ER SU PPDU and HE TB PPDU; alternative configurations of the packet types or formats, headers fields, parts and bits, including HE-SIG-A, HE-SIG-A1, HE-SIG-A1-R, HE-SIG-A2, HE-SIG-A2-R, HE-SIG-B, HE-STF, HE-LTF, L-STF, L-LTF, L-SIG, RL-SIG and PE; alternative configurations of frequency and channel bands and bandwidth divisions, subdivisions, subchannels and subcarriers; alternative configurations of the HE STA, pre-HE [de]modulated and HE [de]modulated fields, transmitter, receiver, encoder, decoder, modulator and demodulator, and alternative symbols and symbol configuration, in transmitting, receiving, encoding, modulating or generating, including for alternative configurations for SU and/or MU.

<table>
<tr><th>Claim 8</th><th>Wi-Fi 6 Accused Instrumentalities</th></tr>
<tr><td>The wireless transceiver of claim 1, wherein the second header field indicates the type of packet.</td><td>

The Accused Instrumentalities comprise a wireless transceiver wherein the second header field indicates the type of packet. This is indicated below:[45]

27.3.11.7.2 Content

The HE-SIG-A field for an HE SU PPDU or an HE ER SU PPDU contains the fields listed in Table 27-18.

Table 27-18—HE-SIG-A field of an HE SU PPDU and HE ER SU PPDU

<table>
<tr><th>Bit</th><th>Field</th><th>Number of bits</th><th>Description</th></tr>
<tr><td colspan="4">HE-SIG-A1 subfield of HE-SIG-A field</td></tr>
<tr><td>B0</td><td>Format</td><td>1</td><td>Differentiate an HE SU PPDU and HE ER SU PPDU from an HE TB PPDU:
Set to 1 for an HE SU PPDU and HE ER SU PPDU.</td></tr>
</table>

It is anticipated that discovery will provide further details of the manner of infringement of the Accused Instrumentalities.

In addition, the foregoing structures may be implemented in alternative configurations and usages that are equivalent to this claim element.

In addition, the foregoing structures may be implemented in alternative configurations and usages that are equivalent to this claim element because they perform substantially the same function of wherein the second header field indicates the type of packet, in substantially the same way wherein the second header field indicates the type of packet, to obtain the same result of providing additional diversity, reducing data loss and increasing decoding accuracy.

For example, alternative equivalent configurations include the following, separately or in conjunction, which achieve the same functionalities provided by the claimed

</td></tr>
</table>

[45] IEEE Std 802.11ax-2021, Sec. 27.3.11.7.2

	configurations: alternative configurations of HE PHY and PPDUs, including HE SU PPDU, HE MU PPDU, HE ER SU PPDU and HE TB PPDU; alternative configurations of the packet types or formats, headers fields, parts and bits, including HE-SIG-A, HE-SIG-A1, HE-SIG-A1-R, HE-SIG-A2, HE-SIG-A2-R, HE-SIG-B, HE-STF, HE-LTF, L-STF, L-LTF, L-SIG, RL-SIG and PE; alternative configurations of frequency and channel bands and bandwidth divisions, subdivisions, subchannels and subcarriers; alternative configurations of the HE STA, pre-HE [de]modulated and HE [de]modulated fields, transmitter, receiver, encoder, decoder, modulator and demodulator, and alternative symbols and symbol configuration, in transmitting, receiving, encoding, modulating or generating, including for alternative configurations for SU and/or MU.

Appendix H
Claim Chart for U.S. Patent No. 10,291,449

Claim 9	Wi-Fi 6 Accused Instrumentalities
A method of operating a wireless OFDM (Orthogonal Frequency Division Multiplexing) transceiver comprising:	The Accused Instrumentalities comprise a method of operating a wireless OFDM (Orthogonal Frequency Division Multiplexing) transceiver that comprises the following technical elements and limitations, as described in the Wi-Fi 6 Standard. For example, devices that comply with the IEEE 802.11ax standard ("Wi-Fi 6") comprise a method of operating a wireless OFDM transceiver comprising a wireless OFDM (Orthogonal Frequency Division Multiplexing) transceiver. See claim 1.
generating, by a wireless OFDM communications transmitter, a first packet type for transmission in a first channel bandwidth, the first packet type comprising a first header field, wherein the first header field comprises two parts, a first part comprising a first set of header bits of the first header field and a second part comprising a second set of header bits of the first header field, wherein the first set of header bits of the first header field is different than the second set of header bits of the first header field; and	The Accused Instrumentalities comprise generating, by a wireless OFDM communications transmitter, a first packet type comprising a first header field, wherein the first header field comprises two parts, a first part comprising a first set of header bits of the first header field and a second part comprising a second set of header bits of the first header field, wherein the first set of header bits of the first header field is different than the second set of header bits of the first header field. See claim 1 ("a wireless OFDM communications transmitter operable to generate a first packet type for transmission in a first channel bandwidth, the first packet type comprising a first header field, wherein the first header field comprises two parts, a first part comprising a first set of header bits of the first header field and a second part comprising a second set of header bits of the first header field, wherein the first set of header bits of the first header field is different than the second set of header bits of the first header field").
generating, by an encoder and a modulator, a first OFDM symbol followed by a second OFDM symbol, wherein the first OFDM symbol is used to	The Accused Instrumentalities comprise generating, by an encoder and a modulator, a first OFDM symbol followed by a second OFDM symbol, wherein the first OFDM symbol is used to transmit the first part of the first header field and the second OFDM symbol is used to transmit the second part of the first header field. See claim 1 ("an encoder and a modulator operable to generate a first OFDM symbol followed by a second OFDM symbol, wherein the first OFDM symbol is used to

Claim 9	Wi-Fi 6 Accused Instrumentalities
transmit the first part of the first header field and the second OFDM symbol is used to transmit the second part of the first header field;	transmit the first part of the first header field and the second OFDM symbol is used to transmit the second part of the first header field”).
transmitting, by the wireless OFDM communications transmitter, first packet type over a wireless communication channel,	The Accused Instrumentalities comprise transmitting, by the wireless OFDM communications transmitter, the first packet type over a wireless communication channel. See claim 1 (“the wireless OFDM communications transmitter further operable to transmit the first packet type over a wireless communication channel”).
generating, by the wireless OFDM communications transmitter, a second packet type for transmission in a second channel bandwidth, the second packet type comprising a second header field, wherein the second header field comprises four parts, a first part comprising a first set of header bits of the second header field, a second part comprising a second set of header bits of the second header field, a third part comprising a third set of header bits of the second header field and a fourth part	The Accused Instrumentalities comprise generating, by the wireless OFDM communications transmitter, a second packet type comprising a second header field, wherein the second header field comprises four parts, a first part comprising a first set of header bits of the second header field, a second part comprising a second set of header bits of the second header field, a third part comprising a third set of header bits of the second header field and a fourth part comprising a fourth set of header bits of the second header field. See claim 1 (the wireless OFDM communications transmitter further operable to generate a second packet type for transmission in a second channel bandwidth, the second packet type comprising a second header field, wherein the second header field comprises four parts, a first part comprising a first set of header bits of the second header field, a second part comprising a second set of header bits of the second header field, a third part comprising a third set of header bits of the second header field and a fourth part comprising a fourth set of header bits of the second header field”).

Claim 9	Wi-Fi 6 Accused Instrumentalities
comprising a fourth set of header bits of the second header field,	
wherein the first set of header bits of the second header field is the same as the second set of header bits of the second header field, wherein the third set of header bits of the second header field is the same as the fourth set of header bits of the second header field,	The Accused Instrumentalities comprise wherein the first set of header bits of the second header field is the same as the second set of header bits of the second header field, wherein the third set of header bits of the second header field is the same as the fourth set of header bits of the second header field. See claim 1 ("wherein the first set of header bits of the second header field is the same as the second set of header bits of the second header field, wherein the third set of header bits of the second header field is the same as the fourth set of header bits of the second header field").
generating, by an encoder and a modulator, a first OFDM symbol followed by a second OFDM symbol followed by a third OFDM symbol followed by a fourth OFDM symbol, wherein the first OFDM symbol is used to transmit the first part of the second header field, the second OFDM symbol is used to transmit the second part of the second header field, the third OFDM symbol is used to transmit the third part of the second header field, the fourth OFDM symbol is used to transmit the	The Accused Instrumentalities comprise generating, by an encoder and a modulator, a first OFDM symbol followed by a second OFDM symbol followed by a third OFDM symbol followed by a fourth OFDM symbol, wherein the first OFDM symbol is used to transmit the first part of the second header field, the second OFDM symbol is used to transmit the second part of the second header field, the third OFDM symbol is used to transmit the third part of the second header field, the fourth OFDM symbol is used to transmit the fourth part of the second header field. See claim 1 ("the encoder and the modulator further operable to generate a first OFDM symbol followed by a second OFDM symbol followed by a third OFDM symbol followed by a fourth OFDM symbol, wherein the first OFDM symbol is used to transmit the first part of the second header field, the second OFDM symbol is used to transmit the second part of the second header field, the third OFDM symbol is used to transmit the third part of the second header field, the fourth OFDM symbol is used to transmit the fourth part of the second header field").

Appendix H
Claim Chart for U.S. Patent No. 10,291,449

Claim 9	Wi-Fi 6 Accused Instrumentalities
fourth part of the second header field,	
wherein the second set of header bits of the second header field transmitted using the second OFDM symbol are transmitted in a different order than the first set of header bits of the second header field transmitted using the first OFDM symbol,	The Accused Instrumentalities comprise wherein the second set of header bits of the second header field transmitted using the second OFDM symbol are transmitted in a different order than the first set of header bits of the second header field transmitted using the first OFDM symbol. See claim 1 ("wherein the second set of header bits of the second header field transmitted using the second OFDM symbol are transmitted in a different order than the first set of header bits of the second header field transmitted using the first OFDM symbol").
wherein the fourth set of header bits of the second header field transmitted using the fourth OFDM symbol are transmitted in a different order than the third set of header bits of the second header field transmitted using the third OFDM symbol, and	The Accused Instrumentalities comprise wherein the fourth set of header bits of the second header field transmitted using the fourth OFDM symbol are transmitted in a different order than the third set of header bits of the second header field transmitted using the third OFDM symbol. See claim 1 ("wherein the fourth set of header bits of the second header field transmitted using the fourth OFDM symbol are transmitted in a different order than the third set of header bits of the second header field transmitted using the third OFDM symbol").
transmitting, by the wireless OFDM communications transmitter, the second packet type over the wireless communication channel.	The Accused Instrumentalities comprise transmitting, by the wireless OFDM communications transmitter, the second packet type over the wireless communication channel. See claim 1 ("the wireless OFDM communications transmitter further operable to transmit the second packet type over the wireless communication channel").

Appendix H
Claim Chart for U.S. Patent No. 10,291,449

Claim 9	Wi-Fi 6 Accused Instrumentalities
wherein the first channel bandwidth is at least two times wider than the second channel bandwidth.	The Accused Instrumentalities comprise wherein the first channel bandwidth is at least two times wider than the second channel bandwidth. See claim 1 ("wherein the first channel bandwidth is at least two times wider than the second channel bandwidth").

Appendix H
Claim Chart for U.S. Patent No. 10,291,449

Claim 10	Wi-Fi 6 Accused Instrumentalities
The method of claim 9, wherein the transmission of the same header bits in the second OFDM symbol provides diversity to increase a likelihood of correctly communicating header information of the second packet type.	The Accused Instrumentalities comprise a method of operating a wireless OFDM transceiver wherein the transmission of the same header bits in the second OFDM symbol provides diversity to increase a likelihood of correctly communicating header information of the second packet type. See claim 2.

Appendix H
Claim Chart for U.S. Patent No. 10,291,449

Claim 11	Wi-Fi 6 Accused Instrumentalities
The method of claim 9, wherein the transmission of the same header bits in the fourth OFDM symbol provides diversity to increase a likelihood of correctly communicating header information of the second packet type.	The Accused Instrumentalities comprise a method of operating a wireless OFDM transceiver wherein the transmission of the same header bits in the fourth OFDM symbol provides diversity to increase a likelihood of correctly communicating header information of the second packet type. See claim 3.

Appendix H
Claim Chart for U.S. Patent No. 10,291,449

Claim 13	Wi-Fi 6 Accused Instrumentalities
The method of claim 9, wherein the wireless transceiver supports one or more wireless standards.	The Accused Instrumentalities comprise a method of operating a wireless OFDM transceiver wherein the wireless transceiver supports one or more wireless standards. See claim 5

Appendix I
Claim Chart for U.S. Patent No. 10,554,459

Claim 1	Wi-Fi 6 Accused Instrumentalities
A wireless OFDM (Orthogonal Frequency Division Multiplexing) transceiver comprising:	The Accused Instrumentalities comprise a wireless OFDM (Orthogonal Frequency Division Multiplexing) transceiver that comprises the following technical elements and limitations, as described in the Wi-Fi 6 Standard. For example, devices that comply with the IEEE 802.11ax standard ("Wi-Fi 6") comprise a wireless OFDM (Orthogonal Frequency Division Multiplexing) transceiver. The citations herein to the Wi-Fi 6 standard are further illustrative of the technical specifications implemented in and/or embodied by the Accused Instrumentalities and applicable whether or not the Accused Instrumentalities are standard compliant. For example, Wi-Fi 6 devices comprise a wireless OFDM transceiver that is capable of transmitting and receiving ("transceiving") physical layer protocol data units (PPDUs). This is indicated below:[1]

[1] IEEE Std 802.11ax-2021, Sec. 27.1.1.

Appendix I
Claim Chart for U.S. Patent No. 10,554,459

Claim 1	Wi-Fi 6 Accused Instrumentalities
	27. High-efficiency (HE) PHY specification **27.1 Introduction** **27.1.1 Introduction to the HE PHY** Clause 27 specifies the PHY entity for a high-efficiency (HE) orthogonal frequency division multiplexing (OFDM) system. In addition to the requirements in Clause 27, an HE STA shall be capable of transmitting and receiving PPDUs that are compliant with the mandatory requirements of the following PHY specifications: — Clause 19 and Clause 21 if the HE STA supports an operating channel width greater than or equal to 80 MHz and is operating in the 5 GHz band. — Clause 19 and Clause 21 transmission and reception on 20 MHz channel width (see 26.17.1) if the HE STA is a 20 MHz-only non-AP HE STA and is operating in the 5 GHz band. — Clause 19 if the HE STA is operating in the 2.4 GHz band. — Clause 17 if the HE STA is operating in the 6 GHz band. It is anticipated that discovery will provide further details of the manner of infringement of the Accused Instrumentalities. Upon information and belief, AX Wireless contends that these infringement contentions are equally applicable to all examples, aspects, applications, configurations, embodiments and instances of Defendants' Wi-Fi 6 devices.
a wireless OFDM communications receiver operable to receive, over a wireless communication channel, a first packet type in a first channel bandwidth, the	The Accused Instrumentalities comprise a wireless OFDM communications receiver operable to receive, over a wireless communication channel, a first packet type comprising a first header field, wherein the first header field comprises two parts, a first part comprising a first set of header bits of the first header field and a second part comprising a second set of header bits of the first header field, wherein the first set of header bits of the first header field is different than the second set of header bits of the first header field.

Appendix I
Claim Chart for U.S. Patent No. 10,554,459

Claim 1	Wi-Fi 6 Accused Instrumentalities
first packet type comprising a first header field, wherein the first header field comprises two parts, a first part comprising a first set of header bits of the first header field and a second part comprising a second set of header bits of the first header field, wherein the first set of header bits of the first header field is different than the second set of header bits of the first header field; and	For example, Wi-Fi 6 devices comprise a wireless OFDM communications receiver operable to receive, over a wireless communication channel, a first packet type comprising a first header field, wherein the first header field comprises two parts, a first part comprising a first set of header bits of the first header field and a second part comprising a second set of header bits of the first header field, wherein the first set of header bits of the first header field is different than the second set of header bits of the first header field. Wi-Fi 6 devices comprise a wireless OFDM communications receiver operable to receive, over a wireless communication channel, a first packet type comprising a first header field. For example, Wi-Fi 6 devices comprise a high-efficiency (HE) station (STA) that can receive the high-efficiency single user physical layer protocol data unit (HE SU PPDU) format, among other PPDU formats:[2] The HE PHY provides support for midambles. Midambles facilitate updating of the channel estimate during HE PPDU reception and might be of use in high mobility scenarios that often result in significant variations of the wireless channel over the duration of a PPDU. An HE STA shall support the following features: — Transmission and reception of an HE SU PPDU that consists of a single RU spanning the entire PPDU bandwidth. See also:[3] **high-efficiency (HE) single-user (SU) physical layer (PHY) protocol data unit (PPDU) (HE SU PPDU):** A PPDU transmitted with HE SU PPDU format. This PPDU carries a single PHY service data unit (PSDU).

[2] IEEE Std 802.11ax-2021, Sec. 27.1.1.

[3] IEEE Std 802.11ax-2021, Sec. 3.2.

Appendix I
Claim Chart for U.S. Patent No. 10,554,459

<table>
<tr><th>Claim 1</th><th>Wi-Fi 6 Accused Instrumentalities</th></tr>
<tr><td></td><td>
The first packet type is for transmission in a first channel bandwidth. For example, the HE SU PPDU is for transmission in a first channel bandwidth. This is indicated below:[4]

Table 27-18—HE-SIG-A field of an HE SU PPDU and HE ER SU PPDU *(continued)*

<table>
<tr><th>Bit</th><th>Field</th><th>Number of bits</th><th>Description</th></tr>
<tr><td>B14</td><td>Reserved</td><td>1</td><td>Reserved and set to 1.</td></tr>
<tr><td>B15–B18</td><td>Spatial Reuse</td><td>4</td><td>Indicates whether spatial reuse modes are allowed during the transmission of this PPDU:
Set to a value from Table 27-22 (see 26.11.6 and 26.10).</td></tr>
<tr><td>B19–B20</td><td>Bandwidth</td><td>2</td><td>For an HE SU PPDU:
Set to 0 for 20 MHz.
Set to 1 for 40 MHz.
Set to 2 for 80 MHz.
Set to 3 for 160 MHz and 80+80 MHz.

For an HE ER SU PPDU:
Set to 0 for 242-tone RU.
Set to 1 for upper frequency 106-tone RU within the primary 20 MHz.
Values 2 and 3 are reserved.</td></tr>
</table>

The HE SU PPDU is a first packet type comprising a first header field. For example, the HE SU PPDU comprises the HE-SIG-A field. This is indicated below:[5]
</td></tr>
</table>

[4] IEEE Std 802.11ax-2021, Sec. 27.3.11.7.2.

[5] IEEE Std 802.11ax-2021, Sec. 27.3.4.

Appendix I
Claim Chart for U.S. Patent No. 10,554,459

Claim 1	Wi-Fi 6 Accused Instrumentalities
	27.3.4 HE PPDU formats Four HE PPDU formats are defined: HE SU PPDU, HE MU PPDU, HE ER SU PPDU, and HE TB PPDU. The HE sounding NDP is a variant of the HE SU PPDU and defined in 27.3.17. The HE TB feedback NDP is a variant of the HE TB PPDU and defined in 27.3.18. NOTE—The HE ER SU PPDU is not a variant of the HE SU PPDU. Requirements related to HE SU PPDUs and HE ER SU PPDUs are specified separately. The format of the HE SU PPDU is defined as in Figure 27-8. This PPDU format is used for SU transmission, and in this format, the HE-SIG-A field is not repeated. 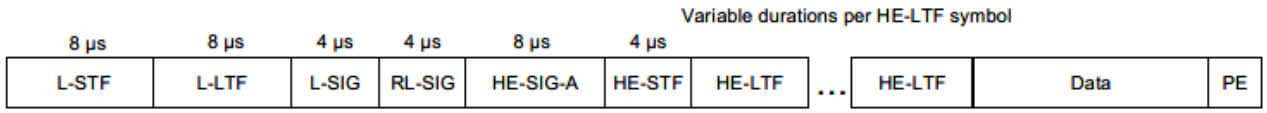 **Figure 27-8—HE SU PPDU format** See also:[6]

[6] IEEE Std 802.11ax-2021, Sec. 27.3.4.

Appendix I
Claim Chart for U.S. Patent No. 10,554,459

<table>
<tr><th>Claim 1</th><th>Wi-Fi 6 Accused Instrumentalities</th></tr>
<tr><td></td><td>
The fields of the HE PPDU formats are summarized in Table 27-11.

Table 27-11—HE PPDU fields

<table>
<tr><th>Field</th><th>Description</th></tr>
<tr><td>L-STF</td><td>Non-HT Short Training field</td></tr>
<tr><td>L-LTF</td><td>Non-HT Long Training field</td></tr>
<tr><td>L-SIG</td><td>Non-HT SIGNAL field</td></tr>
<tr><td>RL-SIG</td><td>Repeated Non-HT SIGNAL field</td></tr>
<tr><td>HE-SIG-A</td><td>HE SIGNAL A field</td></tr>
<tr><td>HE-SIG-B</td><td>HE SIGNAL B field</td></tr>
<tr><td>HE-STF</td><td>HE Short Training field</td></tr>
<tr><td>HE-LTF</td><td>HE Long Training field</td></tr>
<tr><td>Data</td><td>The Data field carrying the PSDU(s)</td></tr>
<tr><td>PE</td><td>Packet extension field</td></tr>
</table>

The RL-SIG, HE-SIG-A, HE-STF, HE-LTF, and PE fields are present in all HE PPDU formats. The HE-SIG-B field is present only in the HE MU PPDU. The PE field is defined in 27.3.13.

The L-STF, L-LTF, L-SIG, RL-SIG, HE-SIG-A, and HE-SIG-B fields are referred to as *pre-HE modulated fields*, while the HE-STF, HE-LTF, Data, and PE fields are referred to as *HE modulated fields*.
</td></tr>
</table>

Appendix I
Claim Chart for U.S. Patent No. 10,554,459

Claim 1	Wi-Fi 6 Accused Instrumentalities
	The first header field comprises two parts. For example, the HE-SIG-A field comprises two subfields, HE-SIG-A1 and HE-SIG-A2. This is indicated below:[7] **27.3.6.6 Construction of HE-SIG-A field** a) For an HE SU PPDU, HE MU PPDU, and HE TB PPDU, the HE-SIG-A field consists of two subfields, HE-SIG-A1 and HE-SIG-A2 as defined in 27.3.11.7, and is constructed as follows: 1) Obtain the HE-SIG-A field values from the TXVECTOR. Add the reserved bits, append the calculated CRC, and then append the N_{tail} tail bits as shown in 27.3.11.7. This results in 52 uncoded bits. 2) BCC encoder: Encode the data by a convolutional encoder at the rate $R = 1/2$ as described in 17.3.5.6. 3) BCC interleaver: Interleave as described in 27.3.12.8. 4) Constellation mapper: BPSK modulate the first 52 interleaved bits as described in 17.3.5.8 to form the first OFDM symbol of the HE-SIG-A field. BPSK modulate the second 52 interleaved bits to form the second OFDM symbol of the HE-SIG-A field. 5) Pilot insertion: Insert pilots as described in 17.3.5.9. 6) Duplicate and phase rotation: Duplicate the HE-SIG-A OFDM symbols over each occupied 20 MHz subchannel of the channel width. Apply the appropriate phase rotation for each occupied 20 MHz subchannel as described in 27.3.10 and 21.3.7.5. 7) CSD per STS: If the TXVECTOR parameter BEAM_CHANGE is 0, apply CSD per STS for each space-time stream and frequency segment as described in 27.3.11.2.2 before spatial mapping. 8) Spatial mapping: If the TXVECTOR parameter BEAM_CHANGE is 0, apply the A matrix and the Q matrix as described in 27.3.11.7.4. 9) IDFT: Compute the inverse discrete Fourier transform. 10) CSD per chain: If the TXVECTOR parameter BEAM_CHANGE is 1 or not present, apply CSD per chain for each transmit chain and frequency segment as described in 27.3.11.2.1. 11) GI and windowing: Prepend a GI ($T_{GI,\text{Pre-HE}}$), and apply windowing as described in 27.3.10. 12) Analog and RF: Upconvert the resulting complex baseband waveform associated with each transmit chain to an RF signal according to the center frequency of the desired channel and transmit. Refer to 27.3.10 and 27.3.11 for details.

[7] IEEE Std 802.11ax-2021, Sec. 27.3.6.6.

Appendix I
Claim Chart for U.S. Patent No. 10,554,459

Claim 1	Wi-Fi 6 Accused Instrumentalities
	A first part comprises a first set of header bits of the first header field. For example, the HE-SIG-A1 subfield comprises a first set of header bits of HE-SIG-A. This is indicated below:[8]

27.3.11.7.2 Content

The HE-SIG-A field for an HE SU PPDU or an HE ER SU PPDU contains the fields listed in Table 27-18.

Table 27-18—HE-SIG-A field of an HE SU PPDU and HE ER SU PPDU

Bit	Field	Number of bits	Description
HE-SIG-A1 subfield of HE-SIG-A field			
B0	Format	1	Differentiate an HE SU PPDU and HE ER SU PPDU from an HE TB PPDU: Set to 1 for an HE SU PPDU and HE ER SU PPDU.
B1	Beam Change	1	Set to 1 to indicate that the pre-HE modulated fields of the PPDU may be spatially mapped differently from the first symbol of the HE-LTF. Equation (27-6), Equation (27-9), Equation (27-12), Equation (27-14), Equation (27-16), and Equation (27-18) apply if the Beam Change field is 1. Set to 0 to indicate that the pre-HE modulated fields of the PPDU are spatially mapped the same way as the first symbol of the HE-LTF on each subcarrier. Equation (27-8), Equation (27-10), Equation (27-13), Equation (27-15), Equation (27-17), and Equation (27-19) apply if the Beam Change field is 0.
B2	UL/DL	1	Indicates whether the PPDU is sent UL or DL. Set to 1 if the PPDU is addressed to an AP. Set to 0 otherwise. See TXVECTOR parameter UPLINK_FLAG.

[8] IEEE Std 802.11ax-2021, Sec. 27.3.11.7.2.

Appendix I
Claim Chart for U.S. Patent No. 10,554,459

Claim 1	Wi-Fi 6 Accused Instrumentalities
	(cont.)

B3–B6	HE-MCS	4	For an HE SU PPDU: Set to *n* for HE-MCS *n*, where *n* = 0, 1, 2, …, 11. Values 12–15 are reserved. For an HE ER SU PPDU with Bandwidth field set to 0 (242-tone RU): Set to *n* for HE-MCS *n*, where *n* = 0, 1, 2. Values 3–15 are reserved. For an HE ER SU PPDU with Bandwidth field set to 1 (upper frequency 106-tone RU): Set to 0 for HE-MCS 0. Values 1–15 are reserved.
B7	DCM	1	Indicates whether DCM is applied to the Data field for the HE-MCS indicated. See Table 27-19 for the interpretation of this field. NOTE—DCM is applicable to only HE-MCSs 0, 1, 3, and 4. DCM is applicable to only 1 and 2 spatial streams.
B8–B13	BSS Color	6	An identifier of the BSS. See TXVECTOR parameter BSS_COLOR.

Claim 1	Wi-Fi 6 Accused Instrumentalities
	(cont.)

Table 27-18—HE-SIG-A field of an HE SU PPDU and HE ER SU PPDU *(continued)*

Bit	Field	Number of bits	Description
B14	Reserved	1	Reserved and set to 1.
B15–B18	Spatial Reuse	4	Indicates whether spatial reuse modes are allowed during the transmission of this PPDU: Set to a value from Table 27-22 (see 26.11.6 and 26.10).
B19–B20	Bandwidth	2	For an HE SU PPDU: Set to 0 for 20 MHz. Set to 1 for 40 MHz. Set to 2 for 80 MHz. Set to 3 for 160 MHz and 80+80 MHz. For an HE ER SU PPDU: Set to 0 for 242-tone RU. Set to 1 for upper frequency 106-tone RU within the primary 20 MHz. Values 2 and 3 are reserved.
B21–B22	GI+HE-LTF Size	2	Indicates the GI duration and HE-LTF size. See Table 27-19 for the interpretation of this field.
B23–B25	NSTS And Midamble Periodicity	3	If the Doppler field is 0, indicates the number of space-time streams. Set to the number of space-time streams minus 1. For an HE ER SU PPDU, values 2–7 are reserved. If the Doppler field is 1, then B23-B24 indicates the number of space time streams, up to 4, and B25 indicates the midamble periodicity. B23-B24 is set to the number of space time streams minus 1. For an HE ER SU PPDU, values 2 and 3 are reserved. B25 is set to 0 for 10 symbol midamble periodicity, to 1 for 20 symbol midamble periodicity. See TXVECTOR parameter MIDAMBLE_PERIODICITY.

Claim 1	Wi-Fi 6 Accused Instrumentalities
	A second part comprises a second set of header bits of the first header field. For example, the HE-SIG-A2 subfield comprises a second set of header bits of HE-SIG-A. This is indicated below:[9]

Bit	Field	Number of bits	Description
HE-SIG-A2 subfield of HE-SIG-A field			
B0–B6	TXOP	7	Set to 127 to indicate no duration information. Set to a value less than 127 to indicate the closest minimum bound on the duration information for NAV setting and protection of the TXOP as follows: If B0 is 0, the TXOP duration indicated is B1-B6, in units of 8 µs. If B0 is 1, the TXOP duration indicated is B1-B6, in units of 128 µs, plus 512 µs. See TXVECTOR parameter TXOP_DURATION.
B7	Coding	1	Indicates whether BCC or LDPC is used: Set to 0 to indicate BCC Set to 1 to indicate LDPC
B8	LDPC Extra Symbol Segment	1	Indicates the presence of the LDPC extra symbol segment: Set to 1 if an LDPC extra symbol segment is present. Set to 0 if an LDPC extra symbol segment is not present. Reserved and set to 1 if the Coding field is 0.
B9	STBC	1	Indicates whether STBC is applied to the Data field. See Table 27-19 for the interpretation of this field.

[9] IEEE Std 802.11ax-2021, Sec. 27.3.11.7.2.

Claim 1	Wi-Fi 6 Accused Instrumentalities
	(cont.) **Table 27-18—HE-SIG-A field of an HE SU PPDU and HE ER SU PPDU *(continued)*** **Bit** / **Field** / **Number of bits** / **Description** B10 / Beamformed / 1 / Set to 1 if a beamforming steering matrix is applied to the HE modulated fields. Set to 0 otherwise. B11–B12 / Pre-FEC Padding Factor / 2 / Indicates the pre-FEC padding factor: Set to 0 to indicate a pre-FEC padding factor of 4. Set to 1 to indicate a pre-FEC padding factor of 1. Set to 2 to indicate a pre-FEC padding factor of 2. Set to 3 to indicate a pre-FEC padding factor of 3. B13 / PE Disambiguity / 1 / Indicates PE disambiguity as defined in 27.3.13. B14 / Reserved / 1 / Reserved and set to 1. B15 / Doppler / 1 / Set to 1 if one of the following applies: — The number of OFDM symbols in the Data field is larger than the signaled midamble periodicity plus 1 and the midamble is present. — The number of OFDM symbols in the Data field is less than or equal to the signaled midamble periodicity plus 1 (see 27.3.12.16, the midamble is not present, but the channel is fast varying. It recommends that midamble may be used for the PPDUs of the reverse link. Set to 0 otherwise. B16–B19 / CRC / 4 / CRC for bits 0–41 of the HE-SIG-A field (see 27.3.11.7.3). Bits 0–41 of the HE-SIG-A field correspond to bits 0–25 of the HE-SIG-A1 subfield followed by bits 0–15 of the HE-SIG-A2 subfield. B20–B25 / Tail / 6 / Used to terminate the trellis of the convolutional decoder. Set to 0. As shown above, the first set of header bits of the first header field (HE-SIG-A1) is different than the second set of header bits of the first header field (HE-SIG-A2).

Claim 1	Wi-Fi 6 Accused Instrumentalities
	It is anticipated that discovery will provide further details of the manner of infringement of the Accused Instrumentalities. In addition, the foregoing structures may be implemented in alternative configurations and usages that are equivalent to this claim element. In addition, the foregoing structures may be implemented in alternative configurations and usages that are equivalent to this claim element because they perform substantially the same function of receiving, over a wireless communication channel, a first packet type comprising a first header field, wherein the first header field comprises two parts, a first part comprising a first set of header bits of the first header field and a second part comprising a second set of header bits of the first header field, wherein the first set of header bits of the first header field is different than the second set of header bits of the first header field, in substantially the same way of receiving, over a wireless communication channel, a first packet type comprising a first header field, wherein the first header field comprises two parts, a first part comprising a first set of header bits of the first header field and a second part comprising a second set of header bits of the first header field, wherein the first set of header bits of the first header field is different than the second set of header bits of the first header field, to obtain the same result of providing additional diversity, reducing data loss and increasing decoding accuracy. For example, alternative equivalent configurations include the following, separately or in conjunction, which achieve the same functionalities provided by the claimed configurations: alternative configurations of HE PHY and PPDUs, including HE SU PPDU, HE MU PPDU, HE ER SU PPDU and HE TB PPDU; alternative configurations of the packet types or formats, headers fields, parts and bits, including HE-SIG-A, HE-SIG-A1, HE-SIG-A1-R, HE-SIG-A2, HE-SIG-A2-R, HE-SIG-B, HE-STF, HE-LTF, L-STF, L-LTF, L-SIG, RL-SIG and PE; alternative configurations of frequency and channel bands and bandwidth divisions, subdivisions, subchannels and subcarriers; alternative configurations of the HE STA, pre-HE [de]modulated and HE [de]modulated fields, transmitter, receiver, encoder, decoder, modulator and demodulator, and alternative symbols and symbol configuration, in transmitting, receiving, encoding, modulating or generating, including for alternative configurations for SU and/or MU.

Appendix I
Claim Chart for U.S. Patent No. 10,554,459

Claim 1	Wi-Fi 6 Accused Instrumentalities
a demodulator operable to demodulate a first OFDM symbol followed by a second OFDM symbol, wherein the first OFDM symbol is used to receive the first part of the first header field and the second OFDM symbol is used to receive the second part of the first header field;	The Accused Instrumentalities comprise a demodulator operable to demodulate a first OFDM symbol followed by a second OFDM symbol, wherein the first OFDM symbol is used to receive the first part of the first header field and the second OFDM symbol is used to receive the second part of the first header field. For example, Wi-Fi 6 devices comprise a demodulator operable to demodulate a first OFDM symbol followed by a second OFDM symbol, wherein the first OFDM symbol is used to receive the first part of the first header field and the second OFDM symbol is used to receive the second part of the first header field. This is indicated below:[10] **27.3.6.6 Construction of HE-SIG-A field** a) For an HE SU PPDU, HE MU PPDU, and HE TB PPDU, the HE-SIG-A field consists of two subfields, HE-SIG-A1 and HE-SIG-A2 as defined in 27.3.11.7, and is constructed as follows: 1) Obtain the HE-SIG-A field values from the TXVECTOR. Add the reserved bits, append the calculated CRC, and then append the N_{tail} tail bits as shown in 27.3.11.7. This results in 52 uncoded bits. 2) BCC encoder: Encode the data by a convolutional encoder at the rate $R = 1/2$ as described in 17.3.5.6. 3) BCC interleaver: Interleave as described in 27.3.12.8. 4) Constellation mapper: BPSK modulate the first 52 interleaved bits as described in 17.3.5.8 to form the first OFDM symbol of the HE-SIG-A field. BPSK modulate the second 52 interleaved bits to form the second OFDM symbol of the HE-SIG-A field.

[10] IEEE Std 802.11ax-2021, Sec. 27.3.6.6.

Appendix I
Claim Chart for U.S. Patent No. 10,554,459

Claim 1	Wi-Fi 6 Accused Instrumentalities
	(cont.) 5) Pilot insertion: Insert pilots as described in 17.3.5.9. 6) Duplicate and phase rotation: Duplicate the HE-SIG-A OFDM symbols over each occupied 20 MHz subchannel of the channel width. Apply the appropriate phase rotation for each occupied 20 MHz subchannel as described in 27.3.10 and 21.3.7.5. 7) CSD per STS: If the TXVECTOR parameter BEAM_CHANGE is 0, apply CSD per STS for each space-time stream and frequency segment as described in 27.3.11.2.2 before spatial mapping. 8) Spatial mapping: If the TXVECTOR parameter BEAM_CHANGE is 0, apply the A matrix and the Q matrix as described in 27.3.11.7.4. 9) IDFT: Compute the inverse discrete Fourier transform. 10) CSD per chain: If the TXVECTOR parameter BEAM_CHANGE is 1 or not present, apply CSD per chain for each transmit chain and frequency segment as described in 27.3.11.2.1. 11) GI and windowing: Prepend a GI ($T_{GI,\text{Pre-HE}}$), and apply windowing as described in 27.3.10. 12) Analog and RF: Upconvert the resulting complex baseband waveform associated with each transmit chain to an RF signal according to the center frequency of the desired channel and transmit. Refer to 27.3.10 and 27.3.11 for details.

Appendix I
Claim Chart for U.S. Patent No. 10,554,459

Claim 1	Wi-Fi 6 Accused Instrumentalities
	See also:[11] **27.3.11.7.4 Encoding and modulation** For an HE SU PPDU, HE MU PPDU, and HE TB PPDU, the HE-SIG-A field is composed of two subfields, HE-SIG-A1 and HE-SIG-A2, each containing 26 data bits. The HE-SIG-A1 subfield is transmitted before the HE-SIG-A2 subfield. The data bits of the HE-SIG-A OFDM symbols shall be BCC encoded at rate $R = 1/2$, be interleaved, be mapped to a BPSK constellation, and have pilots inserted following the steps described in 17.3.5.6, 27.3.12.8, 17.3.5.8, and 17.3.5.9, respectively. The constellation mappings of the HE-SIG-A field in an HE SU PPDU, HE MU PPDU, and HE TB PPDU are shown in Figure 27-25. The first half and second half of the stream of 104 complex numbers generated by these steps (before pilot insertion) are divided into two groups of 52 complex numbers, where the first 52 complex numbers form the first OFDM symbol of the HE-SIG-A field and the second 52 complex numbers form the second OFDM symbol of the HE-SIG-A field, respectively. If the TXVECTOR parameter BEAM_CHANGE is 1 or not present, the time domain waveform for the HE-SIG-A field of an HE SU PPDU, HE MU PPDU, and HE TB PPDU, transmitted on frequency segment i_{Seg} and transmit chain i_{TX}, shall be as specified in Equation (27-16). $$r_{\text{HE-SIG-A}}^{(i_{Seg} i_{TX})}(t) = \frac{1}{\sqrt{N_{TX} \cdot N_{\text{HE-SIG-A}}^{\text{Tone}} \cdot \frac{\lvert\Omega_{20\text{MHz}}\rvert}{N_{20\text{MHz}}}}} \sum_{n=0}^{1} w_{T_{SYML}}(t - nT_{SYML}) \sum_{i_{BW} \in \Omega_{20\text{MHz}}} \sum_{k=-28}^{28} \eta_{\text{HE-SIG-A},k} \left(\begin{array}{l} \Upsilon_{(k - K_{\text{Shift}}(i_{BW})),\,\text{BW}}(D_{k,n,20} + p_{n+2} P_k) \\ \cdot \exp(j2\pi(k - K_{\text{Shift}}(i_{\text{BW}}))\Delta_{F,\,\text{Pre-HE}}(t - nT_{SYML} - T_{GI,\,\text{Pre-HE}} - T_{CS}^{i_{TX}})) \end{array} \right) \quad (27\text{-}16)$$

[11] IEEE Std 802.11ax-2021, Sec. 27.3.11.7.4.

Claim 1	Wi-Fi 6 Accused Instrumentalities
	(cont.) where T_{SYML} is given in Table 27-12 $K_{\text{Shift}}(i) = (N_{20\text{MHz}} - 1 - 2i) \cdot 32$ $D_{k,n,20} = \begin{cases} 0, k = 0, \pm 7, \pm 21 \\ d_{M^r_{20}(k),n}, \text{ otherwise} \end{cases}$ $M^r_{20}(k) = \begin{cases} k+28, -28 \le k \le -22 \\ k+27, -20 \le k \le -8 \\ k+26, -6 \le k \le -1 \\ k+25, 1 \le k \le 6 \\ k+24, 8 \le k \le 20 \\ k+23, 22 \le k \le 28 \end{cases}$ $\eta_{\text{HE-SIG-A},k} = \begin{cases} \left[\frac{1}{\sqrt{2}}, 1\right], \text{ for an HE TB PPDU} \\ 1, \text{ otherwise} \end{cases}$ P_k and p_n are defined in 17.3.5.10 $N^{\text{Tone}}_{\text{HE-SIG-A}}$ is defined in Table 27-16 $T^{i_{TX}}_{CS}$ represents the cyclic shift for transmit chain i_{TX} with a value given in 27.3.11.2.1

Claim 1	Wi-Fi 6 Accused Instrumentalities
	(cont.) If the TXVECTOR parameter BEAM_CHANGE is 0, the time domain waveform of the HE-SIG-A field shall be as given by Equation (27-17). $$r_{\text{HE-SIG-A}}^{(i_{Seg}, i_{TX})}(t) = \frac{1}{\sqrt{N_{STS} \cdot N_{\text{HE-SIG-A}}^{\text{Tone}} \cdot \frac{\lvert\Omega_{20\text{MHz}}\rvert}{N_{20\text{MHz}}}}} \sum_{n=0}^{1} w_{T_{SYML}}(t - nT_{SYML}) \quad (27\text{-}17)$$ $$\sum_{i_{BW}=0}^{N_{20\text{MHz}}-1} \sum_{k=-28}^{28} \sum_{m=1}^{N_{STS}} \left(\left[Q_{4(k-K_{\text{Shift}}(i_{BW}))}^{(i_{Seg})} \right]_{i_{TX}, m} \left[A_{\text{HE-LTF}}^{4(k-K_{\text{Shift}}(i_{BW}))} \right]_{m,1} (D_{k,n,20} + p_{n+2}P_k) \cdot \exp(j2\pi(k - K_{\text{Shift}}(i_{\text{BW}}))\Delta_{F,\text{Pre-HE}}(t - nT_{SYML} - T_{\text{GI, Pre-HE}} - T_{CS,HE}(m))) \right)$$ where $T_{CS,\text{HE}}(m)$ represents the cyclic shift for space-time stream m as defined in 27.3.11.2.2 $Q_k^{(i_{Seg})}$ is defined in 27.3.10 $A_{\text{HE-LTF}}^k$ is defined in Equation (27-55)

Appendix I
Claim Chart for U.S. Patent No. 10,554,459

Claim 1	Wi-Fi 6 Accused Instrumentalities
	See also:[12] 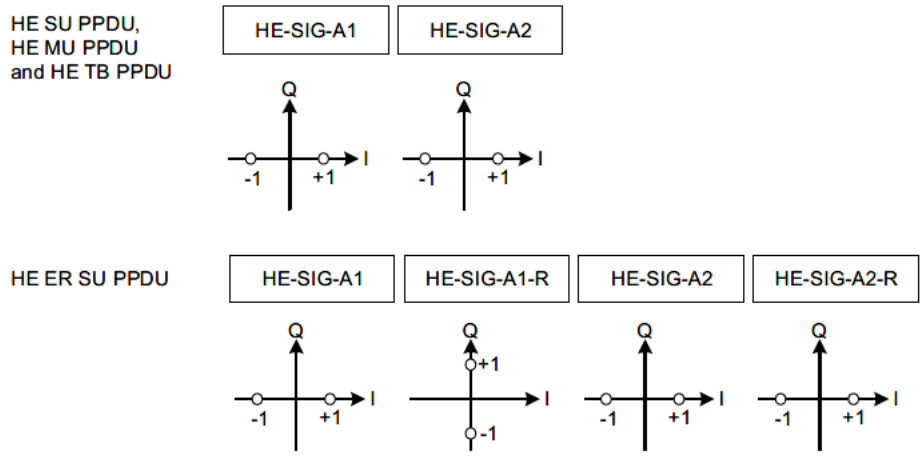 **Figure 27-25—Data subcarrier constellation of HE-SIG-A symbols** It is anticipated that discovery will provide further details of the manner of infringement of the Accused Instrumentalities. In addition, the foregoing structures may be implemented in alternative configurations and usages that are equivalent to this claim element. In addition, the foregoing structures may be implemented in alternative configurations and usages that are equivalent to this claim element because they perform substantially the same function of demodulating a first OFDM symbol followed by a second OFDM symbol, wherein the first OFDM symbol is used to receive the first part of the first header field and the second OFDM symbol is used to receive the second part of the first header field, in substantially the same way of demodulating a first OFDM symbol followed by a second OFDM symbol, wherein the first OFDM

[12] IEEE Std 802.11ax-2021, Sec. 27.3.11.7.4.

Claim 1	Wi-Fi 6 Accused Instrumentalities
	symbol is used to receive the first part of the first header field and the second OFDM symbol is used to receive the second part of the first header field, to obtain the same result of providing additional diversity, reducing data loss and increasing decoding accuracy. For example, alternative equivalent configurations include the following, separately or in conjunction, which achieve the same functionalities provided by the claimed configurations: alternative configurations of HE PHY and PPDUs, including HE SU PPDU, HE MU PPDU, HE ER SU PPDU and HE TB PPDU; alternative configurations of the packet types or formats, headers fields, parts and bits, including HE-SIG-A, HE-SIG-A1, HE-SIG-A1-R, HE-SIG-A2, HE-SIG-A2-R, HE-SIG-B, HE-STF, HE-LTF, L-STF, L-LTF, L-SIG, RL-SIG and PE; alternative configurations of frequency and channel bands and bandwidth divisions, subdivisions, subchannels and subcarriers; alternative configurations of the HE STA, pre-HE [de]modulated and HE [de]modulated fields, transmitter, receiver, encoder, decoder, modulator and demodulator, and alternative symbols and symbol configuration, in transmitting, receiving, encoding, modulating or generating, including for alternative configurations for SU and/or MU.
the wireless OFDM communications receiver further operable to receive, over the wireless communications channel, a second packet type in a second channel bandwidth, the second packet type comprising a second header field, wherein the second header field comprises four parts, a first part comprising a first set of header bits of the second header field, a second part comprising a second set of header bits of the second	The Accused Instrumentalities comprise the wireless OFDM communications receiver further operable to receive, over the wireless communications channel, a second packet type comprising a second header field, wherein the second header field comprises four parts, a first part comprising a first set of header bits of the second header field, a second part comprising a second set of header bits of the second header field, a third part comprising a third set of header bits of the second header field and a fourth part comprising a fourth set of header bits of the second header field,. For example, Wi-Fi 6 devices comprise the wireless OFDM communications receiver further operable to receive, over the wireless communications channel, a second packet type comprising a second header field, wherein the second header field comprises four parts, a first part comprising a first set of header bits of the second header field, a second part comprising a second set of header bits of the second header field, a third part comprising a third set of header bits of the second header field and a fourth part comprising a fourth set of header bits of the second header field.

Appendix I
Claim Chart for U.S. Patent No. 10,554,459

Claim 1	Wi-Fi 6 Accused Instrumentalities
header field, a third part comprising a third set of header bits of the second header field and a fourth part comprising a fourth set of header bits of the second header field,	For example, Wi-Fi 6 comprises high-efficiency stations (HE STAs) capable of receiving PPDUs via 2.4, 5, and 6 Ghz channels. This is indicated below:[13]

[13] IEEE Std 802.11ax-2021, Sec. 27.1.1.

Claim 1	Wi-Fi 6 Accused Instrumentalities
	27. High-efficiency (HE) PHY specification **27.1 Introduction** **27.1.1 Introduction to the HE PHY** Clause 27 specifies the PHY entity for a high-efficiency (HE) orthogonal frequency division multiplexing (OFDM) system. In addition to the requirements in Clause 27, an HE STA shall be capable of transmitting and receiving PPDUs that are compliant with the mandatory requirements of the following PHY specifications: — Clause 19 and Clause 21 if the HE STA supports an operating channel width greater than or equal to 80 MHz and is operating in the 5 GHz band. — Clause 19 and Clause 21 transmission and reception on 20 MHz channel width (see 26.17.1) if the HE STA is a 20 MHz-only non-AP HE STA and is operating in the 5 GHz band. — Clause 19 if the HE STA is operating in the 2.4 GHz band. — Clause 17 if the HE STA is operating in the 6 GHz band. For 2.4 GHz band operation, the HE PHY is based on HT PHY defined in Clause 19, which in turn is based on the OFDM PHY defined in Clause 17. For 5 GHz band operation, the HE PHY is based on the VHT PHY defined in Clause 21, which in turn is based on the HT PHY defined in Clause 19, which in turn is further based on the OFDM PHY defined in Clause 17. For 6 GHz band operation, the HE PHY is based on the OFDM PHY defined in Clause 17. Wi-Fi 6 devices comprise the wireless OFDM communications transmitter further operable to receive, over the wireless communications channel, a second packet type comprising a second

Claim 1	Wi-Fi 6 Accused Instrumentalities
	header field. For example, Wi-Fi 6 devices can receive the high-efficiency extended range single-user PPDU (HE ER SU PPDU) (second packet type), in addition to the HE SU PPDU (first packet type):[14] An HE STA shall support the following features: — Transmission and reception of an HE SU PPDU that consists of a single RU spanning the entire PPDU bandwidth. — Transmission and reception of an HE ER SU PPDU that consists of a 242-tone RU spanning the entire primary 20 MHz PPDU bandwidth. See also:[15] **high-efficiency (HE) extended range (ER) single-user (SU) physical layer (PHY) protocol data unit (PPDU) (HE ER SU PPDU):** A PPDU transmitted with HE ER SU PPDU format. This PPDU carries a single PHY service data unit (PSDU). The second packet type is for transmission in a second channel bandwidth. For example, the HE ER SU PPDU is for transmission in a second channel bandwidth. This is indicated below:[16]

[14] IEEE Std 802.11ax-2021, Sec. 27.1.1.

[15] IEEE Std 802.11ax-2021, Sec. 3.2.

[16] IEEE Std 802.11ax-2021, Sec. 27.3.11.7.2.

Claim 1	Wi-Fi 6 Accused Instrumentalities
	Table 27-18—HE-SIG-A field of an HE SU PPDU and HE ER SU PPDU *(continued)*

Bit	Field	Number of bits	Description
B14	Reserved	1	Reserved and set to 1.
B15–B18	Spatial Reuse	4	Indicates whether spatial reuse modes are allowed during the transmission of this PPDU: Set to a value from Table 27-22 (see 26.11.6 and 26.10).
B19–B20	Bandwidth	2	For an HE SU PPDU: Set to 0 for 20 MHz. Set to 1 for 40 MHz. Set to 2 for 80 MHz. Set to 3 for 160 MHz and 80+80 MHz. For an HE ER SU PPDU: Set to 0 for 242-tone RU. Set to 1 for upper frequency 106-tone RU within the primary 20 MHz. Values 2 and 3 are reserved.

Claim 1	Wi-Fi 6 Accused Instrumentalities
	The second packet type comprises a second header field. For example, the HE ER SU PPDU comprises an HE-SIG-A field:[17] The format of the HE ER SU PPDU is defined as in Figure 27-10. This format is used for SU transmission, and in this format, the HE-SIG-A field is twice as long as the HE-SIG-A field in other HE PPDU formats. 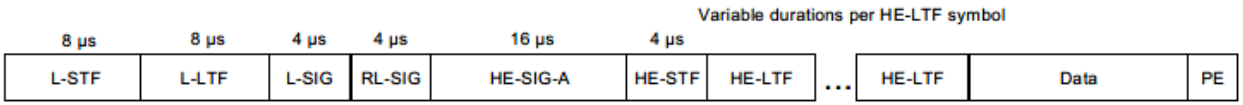 **Figure 27-10—HE ER SU PPDU format** The second header field comprises four parts, a first part comprising a first set of header bits of the second header field, a second part comprising a second set of header bits of the second header field, a third part comprising a third set of header bits of the second header field and a fourth part comprising a fourth set of header bits of the second header field. For example, the HE-SIG-A field in the HE ER SU PPDU comprises four subfields, HE-SIG-A1, HE-SIG-A1-R, HE-SIG-A2, and HE-SIG-A2-R:[18]

[17] IEEE Std 802.11ax-2021, Sec. 27.3.4.

[18] IEEE Std 802.11ax-2021, Sec. 27.3.6.6.

Appendix I
Claim Chart for U.S. Patent No. 10,554,459

Claim 1	Wi-Fi 6 Accused Instrumentalities
	b) For an HE ER SU PPDU, the HE-SIG-A field consists of four subfields: HE-SIG-A1, HE-SIG-A1-R, HE-SIG-A2, and HE-SIG-A2-R. The HE-SIG-A1 and HE-SIG-A1-R subfields have the same data bits while the HE-SIG-A2 and HE-SIG-A2-R subfields have the same data bits as defined in 27.3.11.7. The HE-SIG-A field is constructed as follows: 1) Obtain the HE-SIG-A fields from the TXVECTOR. Add the reserved bits, append the calculated CRC, and then append the N_{tail} tail bits as shown in 27.3.11.7. This results in 52 uncoded bits. 2) BCC encoder: Encode the data by a convolutional encoder at the rate $R = 1/2$ as described in 17.3.5.6. 3) BCC interleaver: Interleave the data bits of the HE-SIG-A1 and HE-SIG-A2 subfields as described in 27.3.12.8. The data bits of the HE-SIG-A1-R and HE-SIG-A2-R subfields are not interleaved. 4) Constellation mapper: BPSK modulate the HE-SIG-A1, HE-SIG-A2, and HE-SIG-A2-R data bits as described in 17.3.5.8 to form the first, third, and fourth OFDM symbol of the HE-SIG-A field, respectively. QBPSK modulate the HE-SIG-A1-R encoded data bits to form the second OFDM symbol of the HE-SIG-A field. 5) Pilot insertion: Insert pilots as described in 17.3.5.9. 6) Duplication and phase rotation: Duplicate the HE-SIG-A field over each occupied 20 MHz subchannel of the channel bandwidth. Apply appropriate phase rotation for each occupied 20 MHz subchannel as described in 27.3.10 and 21.3.7.5. 7) CSD per STS: If the TXVECTOR parameter BEAM_CHANGE is 0, apply CSD per STS for each space-time stream and frequency segment as described in 27.3.11.2.2 before spatial mapping. 8) Spatial mapping: If the TXVECTOR parameter BEAM_CHANGE is 0, apply the A matrix and the Q matrix as described in 27.3.11.7.4. 9) IDFT: Compute the inverse Fourier transform. 10) CSD per chain: If the TXVECTOR parameter BEAM_CHANGE is 1 or not present, apply CSD per chain for each transmit chain and frequency segment as described in 27.3.11.2.1. 11) GI and windowing: Prepend a GI ($T_{GI,\text{Pre-HE}}$), and apply windowing as described in 27.3.10. 12) Analog and RF: Upconvert the resulting complex baseband waveform associated with each transmit chain to an RF signal according to the center frequency of the desired channel and transmit. Refer to 27.3.10 and 27.3.11 for details.

Appendix I
Claim Chart for U.S. Patent No. 10,554,459

Claim 1	Wi-Fi 6 Accused Instrumentalities
	HE-SIG-A1 comprises a first set of header bits of HE-SIG-A, HE-SIG-A1-R comprises a second set of header bits of HE-SIG-A, HE-SIG-A2 comprises a third set of header bits of HE-SIG-A and HE-SIG-A2-R comprises a fourth set of header bits of HE-SIG-A. This is indicated below:[19] For an HE ER SU PPDU, the HE-SIG-A field is composed of four subfields: HE-SIG-A1, HE-SIG-A1-R, HE-SIG-A2, and HE-SIG-A2-R. Each subfield contains 26 data bits. These four subfields are transmitted sequentially from HE-SIG-A1 to HE-SIG-A2-R. The data bits of the HE-SIG-A1 and HE-SIG-A2 subfields shall be BCC encoded at rate $R = 1/2$, be interleaved, be mapped to a BPSK constellation, and have pilots inserted. The HE-SIG-A1-R subfield has the same encoded bits as the HE-SIG-A1 subfield, and the encoded bits shall be mapped to a QBPSK constellation without interleaving and have pilots inserted. The constellation mappings of the HE-SIG-A field in an HE ER SU PPDU are shown in Figure 27-25. The QBPSK constellation on the HE-SIG-A1-R subfield is used to differentiate between an HE ER SU PPDU and an HE MU PPDU when $m = 1$ in Equation (27-11). The HE-SIG-A2-R subfield has the same encoded bits as the HE-SIG-A2 subfield, and the encoded bits shall be mapped to a BPSK constellation without interleaving and have pilots inserted. BCC encoding, data interleaving, constellation mapping, and pilot insertion follow the steps described in 17.3.5.6, 27.3.12.8, 17.3.5.8, and 17.3.5.9, respectively. 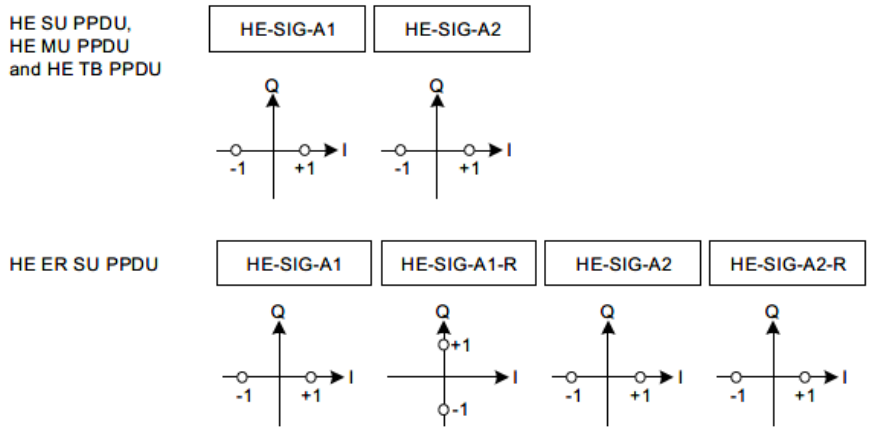 **Figure 27-25—Data subcarrier constellation of HE-SIG-A symbols**

[19] IEEE Std 802.11ax-2021, Sec. 27.3.11.4.

Claim 1	Wi-Fi 6 Accused Instrumentalities
	See also:[20] **Table 27-18—HE-SIG-A field of an HE SU PPDU and HE ER SU PPDU**

Bit	Field	Number of bits	Description
HE-SIG-A1 subfield of HE-SIG-A field			
B0	Format	1	Differentiate an HE SU PPDU and HE ER SU PPDU from an HE TB PPDU: Set to 1 for an HE SU PPDU and HE ER SU PPDU.
B1	Beam Change	1	Set to 1 to indicate that the pre-HE modulated fields of the PPDU may be spatially mapped differently from the first symbol of the HE-LTF. Equation (27-6), Equation (27-9), Equation (27-12), Equation (27-14), Equation (27-16), and Equation (27-18) apply if the Beam Change field is 1. Set to 0 to indicate that the pre-HE modulated fields of the PPDU are spatially mapped the same way as the first symbol of the HE-LTF on each subcarrier. Equation (27-8), Equation (27-10), Equation (27-13), Equation (27-15), Equation (27-17), and Equation (27-19) apply if the Beam Change field is 0.
B2	UL/DL	1	Indicates whether the PPDU is sent UL or DL. Set to 1 if the PPDU is addressed to an AP. Set to 0 otherwise. See TXVECTOR parameter UPLINK_FLAG.
B3–B6	HE-MCS	4	For an HE SU PPDU: Set to n for HE-MCS n, where n = 0, 1, 2, …, 11. Values 12–15 are reserved. For an HE ER SU PPDU with Bandwidth field set to 0 (242-tone RU): Set to n for HE-MCS n, where n = 0, 1, 2. Values 3–15 are reserved. For an HE ER SU PPDU with Bandwidth field set to 1 (upper frequency 106-tone RU): Set to 0 for HE-MCS 0. Values 1–15 are reserved.
B7	DCM	1	Indicates whether DCM is applied to the Data field for the HE-MCS indicated. See Table 27-19 for the interpretation of this field. NOTE—DCM is applicable to only HE-MCSs 0, 1, 3, and 4. DCM is applicable to only 1 and 2 spatial streams.
B8–B13	BSS Color	6	An identifier of the BSS. See TXVECTOR parameter BSS_COLOR.

[20] IEEE Std 802.11ax-2021, Sec. 27.3.11.7.2

Claim 1	Wi-Fi 6 Accused Instrumentalities

Table 27-18—HE-SIG-A field of an HE SU PPDU and HE ER SU PPDU *(continued)*

Bit	Field	Number of bits	Description
B14	Reserved	1	Reserved and set to 1.
B15–B18	Spatial Reuse	4	Indicates whether spatial reuse modes are allowed during the transmission of this PPDU: Set to a value from Table 27-22 (see 26.11.6 and 26.10).
B19–B20	Bandwidth	2	For an HE SU PPDU: Set to 0 for 20 MHz. Set to 1 for 40 MHz. Set to 2 for 80 MHz. Set to 3 for 160 MHz and 80+80 MHz. For an HE ER SU PPDU: Set to 0 for 242-tone RU. Set to 1 for upper frequency 106-tone RU within the primary 20 MHz. Values 2 and 3 are reserved.
B21–B22	GI+HE-LTF Size	2	Indicates the GI duration and HE-LTF size. See Table 27-19 for the interpretation of this field.
B23–B25	NSTS And Midamble Periodicity	3	If the Doppler field is 0, indicates the number of space-time streams. Set to the number of space-time streams minus 1. For an HE ER SU PPDU, values 2–7 are reserved. If the Doppler field is 1, then B23-B24 indicates the number of space time streams, up to 4, and B25 indicates the midamble periodicity. B23-B24 is set to the number of space time streams minus 1. For an HE ER SU PPDU, values 2 and 3 are reserved. B25 is set to 0 for 10 symbol midamble periodicity, to 1 for 20 symbol midamble periodicity. See TXVECTOR parameter MIDAMBLE_PERIODICITY.
HE-SIG-A2 subfield of HE-SIG-A field			
B0–B6	TXOP	7	Set to 127 to indicate no duration information. Set to a value less than 127 to indicate the closest minimum bound on the duration information for NAV setting and protection of the TXOP as follows: If B0 is 0, the TXOP duration indicated is B1-B6, in units of 8 µs. If B0 is 1, the TXOP duration indicated is B1-B6, in units of 128 µs, plus 512 µs. See TXVECTOR parameter TXOP_DURATION.
B7	Coding	1	Indicates whether BCC or LDPC is used: Set to 0 to indicate BCC Set to 1 to indicate LDPC
B8	LDPC Extra Symbol Segment	1	Indicates the presence of the LDPC extra symbol segment: Set to 1 if an LDPC extra symbol segment is present. Set to 0 if an LDPC extra symbol segment is not present. Reserved and set to 1 if the Coding field is 0.
B9	STBC	1	Indicates whether STBC is applied to the Data field. See Table 27-19 for the interpretation of this field.

Claim 1	Wi-Fi 6 Accused Instrumentalities
	(cont.) **Table 27-18—HE-SIG-A field of an HE SU PPDU and HE ER SU PPDU *(continued)*** **Bit** / **Field** / **Number of bits** / **Description** B10 / Beamformed / 1 / Set to 1 if a beamforming steering matrix is applied to the HE modulated fields. Set to 0 otherwise. B11–B12 / Pre-FEC Padding Factor / 2 / Indicates the pre-FEC padding factor: Set to 0 to indicate a pre-FEC padding factor of 4. Set to 1 to indicate a pre-FEC padding factor of 1. Set to 2 to indicate a pre-FEC padding factor of 2. Set to 3 to indicate a pre-FEC padding factor of 3. B13 / PE Disambiguity / 1 / Indicates PE disambiguity as defined in 27.3.13. B14 / Reserved / 1 / Reserved and set to 1. B15 / Doppler / 1 / Set to 1 if one of the following applies: — The number of OFDM symbols in the Data field is larger than the signaled midamble periodicity plus 1 and the midamble is present. — The number of OFDM symbols in the Data field is less than or equal to the signaled midamble periodicity plus 1 (see 27.3.12.16, the midamble is not present, but the channel is fast varying. It recommends that midamble may be used for the PPDUs of the reverse link. Set to 0 otherwise. B16–B19 / CRC / 4 / CRC for bits 0–41 of the HE-SIG-A field (see 27.3.11.7.3). Bits 0–41 of the HE-SIG-A field correspond to bits 0–25 of the HE-SIG-A1 subfield followed by bits 0–15 of the HE-SIG-A2 subfield. B20–B25 / Tail / 6 / Used to terminate the trellis of the convolutional decoder. Set to 0. It is anticipated that discovery will provide further details of the manner of infringement of the Accused Instrumentalities. In addition, the foregoing structures may be implemented in alternative configurations and usages that are equivalent to this claim element. In addition, the foregoing structures may be implemented in alternative configurations and usages that are equivalent to this claim element because they perform substantially the same function of receiving, over the wireless communications channel, a second packet type comprising a second header field, wherein the second header field comprises four parts, a first part comprising a first set of header bits of the second header field, a second part comprising a second set of header bits of the second header field, a third part comprising a third set of header bits of the second header field and

Claim 1	Wi-Fi 6 Accused Instrumentalities
	a fourth part comprising a fourth set of header bits of the second header field, in substantially the same way of receiving, over the wireless communications channel, a second packet type comprising a second header field, wherein the second header field comprises four parts, a first part comprising a first set of header bits of the second header field, a second part comprising a second set of header bits of the second header field, a third part comprising a third set of header bits of the second header field and a fourth part comprising a fourth set of header bits of the second header field, to obtain the same result of providing additional diversity, reducing data loss and increasing decoding accuracy. For example, alternative equivalent configurations include the following, separately or in conjunction, which achieve the same functionalities provided by the claimed configurations: alternative configurations of HE PHY and PPDUs, including HE SU PPDU, HE MU PPDU, HE ER SU PPDU and HE TB PPDU; alternative configurations of the packet types or formats, headers fields, parts and bits, including HE-SIG-A, HE-SIG-A1, HE-SIG-A1-R, HE-SIG-A2, HE-SIG-A2-R, HE-SIG-B, HE-STF, HE-LTF, L-STF, L-LTF, L-SIG, RL-SIG and PE; alternative configurations of frequency and channel bands and bandwidth divisions, subdivisions, subchannels and subcarriers; alternative configurations of the HE STA, pre-HE [de]modulated and HE [de]modulated fields, transmitter, receiver, encoder, decoder, modulator and demodulator, and alternative symbols and symbol configuration, in transmitting, receiving, encoding, modulating or generating, including for alternative configurations for SU and/or MU.
wherein the first set of header bits of the second header field is the same as the second set of header bits of the second header field, wherein the third set of header bits of the second header field is the same as the fourth set of header bits of the second header field,	The Accused Instrumentalities comprise wherein the first set of header bits of the second header field is the same as the second set of header bits of the second header field, wherein the third set of header bits of the second header field is the same as the fourth set of header bits of the second header field. For example, in Wi-Fi 6 devices, the first set of header bits of the second header field is the same as the second set of header bits of the second header field, wherein the third set of header bits of the second header field is the same as the fourth set of header bits of the second header field.

Appendix I
Claim Chart for U.S. Patent No. 10,554,459

Claim 1	Wi-Fi 6 Accused Instrumentalities
	For example, the HE-SIG-A1 subfield (first set of header bits) has the same encoded bits as the HE-SIG-A1-R subfield (second set of header bits), and the HE-SIG-A2 subfield (third set of header bits) has the same encoded bits as the HE-SIG-A2-R (fourth set of header bits):[21] For an HE ER SU PPDU, the HE-SIG-A field is composed of four subfields: HE-SIG-A1, HE-SIG-A1-R, HE-SIG-A2, and HE-SIG-A2-R. Each subfield contains 26 data bits. These four subfields are transmitted sequentially from HE-SIG-A1 to HE-SIG-A2-R. The data bits of the HE-SIG-A1 and HE-SIG-A2 subfields shall be BCC encoded at rate $R = 1/2$, be interleaved, be mapped to a BPSK constellation, and have pilots inserted. The HE-SIG-A1-R subfield has the same encoded bits as the HE-SIG-A1 subfield, and the encoded bits shall be mapped to a QBPSK constellation without interleaving and have pilots inserted. The constellation mappings of the HE-SIG-A field in an HE ER SU PPDU are shown in Figure 27-25. The QBPSK constellation on the HE-SIG-A1-R subfield is used to differentiate between an HE ER SU PPDU and an HE MU PPDU when $m = 1$ in Equation (27-11). The HE-SIG-A2-R subfield has the same encoded bits as the HE-SIG-A2 subfield, and the encoded bits shall be mapped to a BPSK constellation without interleaving and have pilots inserted. BCC encoding, data interleaving, constellation mapping, and pilot insertion follow the steps described in 17.3.5.6, 27.3.12.8, 17.3.5.8, and 17.3.5.9, respectively. 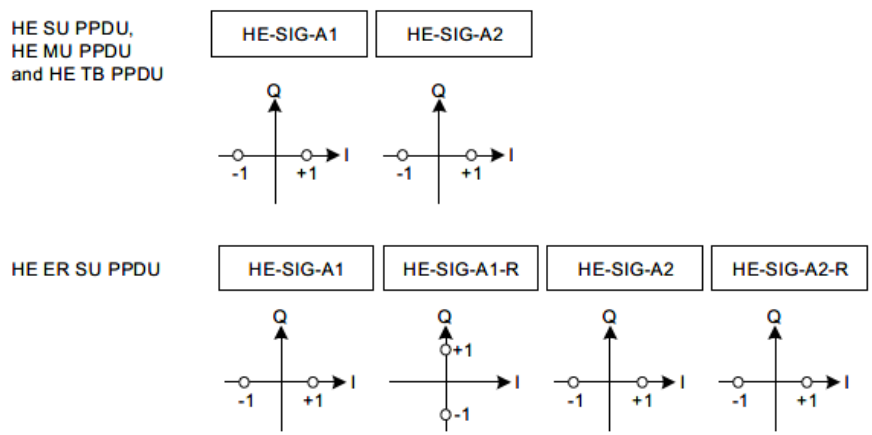 **Figure 27-25—Data subcarrier constellation of HE-SIG-A symbols**

[21] IEEE Std 802.11ax-2021, Sec. 27.3.11.7.4.

Claim 1	Wi-Fi 6 Accused Instrumentalities
	See also:[22] b) For an HE ER SU PPDU, the HE-SIG-A field consists of four subfields: HE-SIG-A1, HE-SIG-A1-R, HE-SIG-A2, and HE-SIG-A2-R. The HE-SIG-A1 and HE-SIG-A1-R subfields have the same data bits while the HE-SIG-A2 and HE-SIG-A2-R subfields have the same data bits as defined in 27.3.11.7. The HE-SIG-A field is constructed as follows: It is anticipated that discovery will provide further details of the manner of infringement of the Accused Instrumentalities. In addition, the foregoing structures may be implemented in alternative configurations and usages that are equivalent to this claim element. In addition, the foregoing structures may be implemented in alternative configurations and usages that are equivalent to this claim element because they perform substantially the same function of receiving a packet type, wherein the first set of header bits of the second header field is the same as the second set of header bits of the second header field, wherein the third set of header bits of the second header field is the same as the fourth set of header bits of the second header field, in substantially the same way of receiving a packet type, wherein the first set of header bits of the second header field is the same as the second set of header bits of the second header field, wherein the third set of header bits of the second header field is the same as the fourth set of header bits of the second header field, to obtain the same result of providing additional diversity, reducing data loss and increasing decoding accuracy. For example, alternative equivalent configurations include the following, separately or in conjunction, which achieve the same functionalities provided by the claimed configurations: alternative configurations of HE PHY and PPDUs, including HE SU PPDU, HE MU PPDU, HE ER SU PPDU and HE TB PPDU; alternative configurations of the packet types or formats, headers fields, parts and bits, including HE-SIG-A, HE-SIG-A1, HE-SIG-A1-R, HE-SIG-A2, HE-SIG-A2-R, HE-SIG-B, HE-STF, HE-LTF, L-STF, L-LTF, L-SIG, RL-SIG and PE; alternative configurations of frequency and channel bands and bandwidth divisions, subdivisions, subchannels and subcarriers; alternative configurations of the HE STA, pre-HE [de]modulated and HE

[22] IEEE Std 802.11ax-2021, Sec. 27.3.6.6.

Claim 1	Wi-Fi 6 Accused Instrumentalities
	[de]modulated fields, transmitter, receiver, encoder, decoder, modulator and demodulator, and alternative symbols and symbol configuration, in transmitting, receiving, encoding, modulating or generating, including for alternative configurations for SU and/or MU.
the demodulator further operable to demodulate a first OFDM symbol followed by a second OFDM symbol followed by a third OFDM symbol followed by a fourth OFDM symbol, wherein the first OFDM symbol is used to receive the first part of the second header field, the second OFDM symbol is used to receive the second part of the second header field, the third OFDM symbol is used to receive the third part of the second header field, the fourth OFDM symbol is used to receive the fourth part of the second header field,	The Accused Instrumentalities comprise the demodulator further operable to demodulate a first OFDM symbol followed by a second OFDM symbol followed by a third OFDM symbol followed by a fourth OFDM symbol, wherein the first OFDM symbol is used to receive the first part of the second header field, the second OFDM symbol is used to receive the second part of the second header field, the third OFDM symbol is used to receive the third part of the second header field, the fourth OFDM symbol is used to receive the fourth part of the second header field. For example, Wi-Fi 6 devices comprise the demodulator further operable to demodulate a first OFDM symbol followed by a second OFDM symbol followed by a third OFDM symbol followed by a fourth OFDM symbol, wherein the first OFDM symbol is used to receive the first part of the second header field, the second OFDM symbol is used to receive the second part of the second header field, the third OFDM symbol is used to receive the third part of the second header field, the fourth OFDM symbol is used to receive the fourth part of the second header field. This is indicated below:[23]

[23] IEEE Std 802.11ax-2021, Sec. 27.3.6.6.

Appendix I
Claim Chart for U.S. Patent No. 10,554,459

Claim 1	Wi-Fi 6 Accused Instrumentalities
	b) For an HE ER SU PPDU, the HE-SIG-A field consists of four subfields: HE-SIG-A1, HE-SIG-A1-R, HE-SIG-A2, and HE-SIG-A2-R. The HE-SIG-A1 and HE-SIG-A1-R subfields have the same data bits while the HE-SIG-A2 and HE-SIG-A2-R subfields have the same data bits as defined in 27.3.11.7. The HE-SIG-A field is constructed as follows: 1) Obtain the HE-SIG-A fields from the TXVECTOR. Add the reserved bits, append the calculated CRC, and then append the N_{tail} tail bits as shown in 27.3.11.7. This results in 52 uncoded bits. 2) BCC encoder: Encode the data by a convolutional encoder at the rate $R = 1/2$ as described in 17.3.5.6. 3) BCC interleaver: Interleave the data bits of the HE-SIG-A1 and HE-SIG-A2 subfields as described in 27.3.12.8. The data bits of the HE-SIG-A1-R and HE-SIG-A2-R subfields are not interleaved. 4) Constellation mapper: BPSK modulate the HE-SIG-A1, HE-SIG-A2, and HE-SIG-A2-R data bits as described in 17.3.5.8 to form the first, third, and fourth OFDM symbol of the HE-SIG-A field, respectively. QBPSK modulate the HE-SIG-A1-R encoded data bits to form the second OFDM symbol of the HE-SIG-A field. See also:[24]

[24] IEEE Std 802.11ax-2021, Sec. 27.3.11.7.4.

Claim 1	Wi-Fi 6 Accused Instrumentalities
	For an HE ER SU PPDU, the HE-SIG-A field is composed of four subfields: HE-SIG-A1, HE-SIG-A1-R, HE-SIG-A2, and HE-SIG-A2-R. Each subfield contains 26 data bits. These four subfields are transmitted sequentially from HE-SIG-A1 to HE-SIG-A2-R. The data bits of the HE-SIG-A1 and HE-SIG-A2 subfields shall be BCC encoded at rate $R = 1/2$, be interleaved, be mapped to a BPSK constellation, and have pilots inserted. The HE-SIG-A1-R subfield has the same encoded bits as the HE-SIG-A1 subfield, and the encoded bits shall be mapped to a QBPSK constellation without interleaving and have pilots inserted. The constellation mappings of the HE-SIG-A field in an HE ER SU PPDU are shown in Figure 27-25. The QBPSK constellation on the HE-SIG-A1-R subfield is used to differentiate between an HE ER SU PPDU and an HE MU PPDU when $m = 1$ in Equation (27-11). The HE-SIG-A2-R subfield has the same encoded bits as the HE-SIG-A2 subfield, and the encoded bits shall be mapped to a BPSK constellation without interleaving and have pilots inserted. BCC encoding, data interleaving, constellation mapping, and pilot insertion follow the steps described in 17.3.5.6, 27.3.12.8, 17.3.5.8, and 17.3.5.9, respectively. 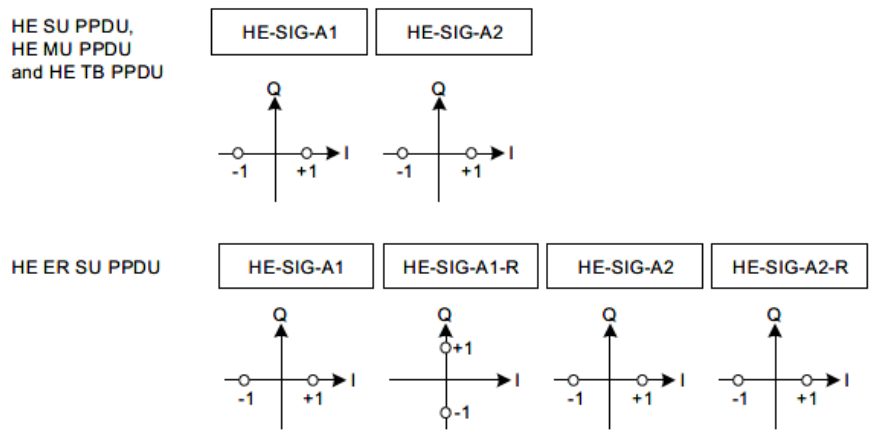 **Figure 27-25—Data subcarrier constellation of HE-SIG-A symbols** See also:[25]

[25] IEEE Std 802.11ax-2021, Sec. 27.3.1.

Appendix I
Claim Chart for U.S. Patent No. 10,554,459

Claim 1	Wi-Fi 6 Accused Instrumentalities
	27.3 HE PHY **27.3.1 Introduction** Subclause 27.3 provides the procedure by which PSDUs are converted to and from transmissions on the wireless medium. During transmission, a PSDU (in the SU case) or one or more PSDUs (in the MU case) are processed (i.e., scrambled and coded) and appended to the PHY preamble to create the PPDU. At the receiver, the PHY preamble is processed to aid in the detection, demodulation, and delivery of the PSDU. It is anticipated that discovery will provide further details of the manner of infringement of the Accused Instrumentalities. In addition, the foregoing structures may be implemented in alternative configurations and usages that are equivalent to this claim element. In addition, the foregoing structures may be implemented in alternative configurations and usages that are equivalent to this claim element because they perform substantially the same function of demodulating a first OFDM symbol followed by a second OFDM symbol followed by a third OFDM symbol followed by a fourth OFDM symbol, wherein the first OFDM symbol is used to receive the first part of the second header field, the second OFDM symbol is used to receive the second part of the second header field, the third OFDM symbol is used to receive the third part of the second header field, the fourth OFDM symbol is used to receive the fourth part of the second header field, in substantially the same way of demodulating a first OFDM symbol followed by a second OFDM symbol followed by a third OFDM symbol followed by a fourth OFDM symbol, wherein the first OFDM symbol is used to receive the first part of the second header field, the second OFDM symbol is used to receive the second part of the second header field, the third OFDM symbol is used to receive the third part of the second header field, the fourth OFDM symbol is used to receive the fourth part of the second header field, to obtain the same result of providing additional diversity, reducing data loss and increasing decoding accuracy. For example, alternative equivalent configurations include the following, separately or in conjunction, which achieve the same functionalities provided by the claimed configurations:

Claim 1	Wi-Fi 6 Accused Instrumentalities
	alternative configurations of HE PHY and PPDUs, including HE SU PPDU, HE MU PPDU, HE ER SU PPDU and HE TB PPDU; alternative configurations of the packet types or formats, headers fields, parts and bits, including HE-SIG-A, HE-SIG-A1, HE-SIG-A1-R, HE-SIG-A2, HE-SIG-A2-R, HE-SIG-B, HE-STF, HE-LTF, L-STF, L-LTF, L-SIG, RL-SIG and PE; alternative configurations of frequency and channel bands and bandwidth divisions, subdivisions, subchannels and subcarriers; alternative configurations of the HE STA, pre-HE [de]modulated and HE [de]modulated fields, transmitter, receiver, encoder, decoder, modulator and demodulator, and alternative symbols and symbol configuration, in transmitting, receiving, encoding, modulating or generating, including for alternative configurations for SU and/or MU.
wherein the second set of header bits of the second header field received using the second OFDM symbol are received in a different order than the first set of header bits of the second header field received using the first OFDM symbol,	The Accused Instrumentalities comprise wherein the second set of header bits of the second header field received using the second OFDM symbol are received in a different order than the first set of header bits of the second header field received using the first OFDM symbol. For example, in the Wi-Fi 6 devices, the second set of header bits of the second header field received using the second OFDM symbol are received in a different order than the first set of header bits of the second header field received using the first OFDM symbol. For example, the bits of HE-SIG-A1-R are not interleaved, whereas the bits of HE-SIG-A1 are interleaved. This is indicated below:[26]

[26] IEEE Std 802.11ax-2021, Sec. 27.3.6.6.

Appendix I
Claim Chart for U.S. Patent No. 10,554,459

Claim 1	Wi-Fi 6 Accused Instrumentalities
	b) For an HE ER SU PPDU, the HE-SIG-A field consists of four subfields: HE-SIG-A1, HE-SIG-A1-R, HE-SIG-A2, and HE-SIG-A2-R. The HE-SIG-A1 and HE-SIG-A1-R subfields have the same data bits while the HE-SIG-A2 and HE-SIG-A2-R subfields have the same data bits as defined in 27.3.11.7. The HE-SIG-A field is constructed as follows: 1) Obtain the HE-SIG-A fields from the TXVECTOR. Add the reserved bits, append the calculated CRC, and then append the N_{tail} tail bits as shown in 27.3.11.7. This results in 52 uncoded bits. 2) BCC encoder: Encode the data by a convolutional encoder at the rate $R = 1/2$ as described in 17.3.5.6. 3) BCC interleaver: Interleave the data bits of the HE-SIG-A1 and HE-SIG-A2 subfields as described in 27.3.12.8. The data bits of the HE-SIG-A1-R and HE-SIG-A2-R subfields are not interleaved. Interleaving the bits of HE-SIG-A1 and not interleaving the bits of HE-SIG-A1-R results in a different reception order of bits as between HE-SIG-A1 and HE-SIG-A1-R. See also:[27]

[27] IEEE Std 802.11ax-2021, Sec. 27.3.12.8.

Claim 1	Wi-Fi 6 Accused Instrumentalities
	27.3.12.8 BCC interleavers For ease of explanation, the operation of the interleaver is described only for the SU case. For user u of an MU transmission, the interleaver operates in the same way on the output bits for the user from the stream parser by replacing N_{SS}, N_{CBPSS}, N_{CBPS}, and N_{BPSCS} with $N_{SS,u}$, $N_{CBPSS,u}$, $N_{CBPS,u}$ and $N_{BPSCS,u}$, respectively. That is, the operation of the interleaver is the same as if the transmission were an SU one, consisting of bits from only that user. The BCC interleaver operation is specified in 21.3.10.8. The interleaver parameters, N_{COL}, N_{ROW}, and N_{ROT}, for the Data field depend on the RU size and whether or not DCM is used and are defined in the "RU size" column of Table 27-35. (cont.)

Claim 1	Wi-Fi 6 Accused Instrumentalities

Table 27-35—BCC interleaver parameters

DCM	Parameter	RU size (tones)				HE-SIG-A/ HE-SIG-B (tones)
		26	52	106	242	56
Not used	N_{COL}	8	16	17	26	13
	N_{ROW}	$3 \times N_{BPSCS}$	$3 \times N_{BPSCS}$	$6 \times N_{BPSCS}$	$9 \times N_{BPSCS}$	$4 \times N_{BPSCS}$
	N_{ROT}	2	11	29	58	—
Used	N_{COL}	4	8	17	13	13
	N_{ROW}	$3 \times N_{BPSCS}$	$3 \times N_{BPSCS}$	$3 \times N_{BPSCS}$	$9 \times N_{BPSCS}$	$2 \times N_{BPSCS}$
	N_{ROT}	2	2	11	29	—

The interleaver parameters, N_{COL} and N_{ROW}, for the HE-SIG-A and HE-SIG-B fields are defined in the "HE-SIG-A/HE-SIG-B" column of Table 27-35.

NOTE—DCM is not used on the HE-SIG-A field.

Claim 1	Wi-Fi 6 Accused Instrumentalities
	See also:[28] **21.3.10.8 BCC interleaver** For ease of explanation, the operation of the interleaver is described for the SU case. For user u of an MU transmission, the interleaver operates in the same way on the output bits for the user from the stream parser by replacing N_{SS}, N_{CBPSS}, N_{CBPSSI}, and N_{BPSCS} with $N_{SS,u}$, $N_{CBPSS,u}$, $N_{CBPSSI,u}$, and $N_{BPSCS,u}$, respectively. That is, the operation of the interleaver is the same as if the transmission were an SU one, consisting of bits from only that user. This subclause describes the interleaver used in the case of BCC encoding. The interleaver described in this subclause shall be bypassed in the case of LDPC encoding. In a 20 MHz, 40 MHz, or 80 MHz VHT PPDU transmission, the bits at the output of the stream parser are processed in groups of N_{CBPS} bits. Each of these groups is divided into N_{SS} blocks of N_{CBPSS} bits, and each block shall be interleaved by an interleaver based on the Clause 17 interleaver. In a 160 MHz or an 80+80 MHz VHT PPDU transmission, each frequency subblock of $N_{CBPSS}/2$ output bits from the segment parser is interleaved by the interleaver for 80 MHz defined in this subclause. This interleaver, which is based on entering the data in rows, and reading it out in columns, has a different number of columns N_{COL} and rows N_{ROW} for different bandwidths. The values of N_{COL} and N_{ROW} are given in Table 21-17. **Table 21-17—Number of rows and columns in the interleaver** Parameter: 20 MHz / 40 MHz / 80 MHz N_{COL}: 13 / 18 / 26 N_{ROW}: $4 \times N_{BPSCS}$ / $6 \times N_{BPSCS}$ / $9 \times N_{BPSCS}$ N_{ROT} ($N_{SS} \leq 4$): 11 / 29 / 58 N_{ROT} ($N_{SS} > 4$): 6 / 13 / 28

[28] IEEE Std 802.11-2020, Sec. 21.3.10.8.

Claim 1	Wi-Fi 6 Accused Instrumentalities
	(cont.) After the operations based on the Clause 17 interleaver have been applied and if more than one spatial stream exists, a third operation called *frequency rotation* is applied to the additional spatial streams. The parameter for the frequency rotation is N_{ROT}. The values of N_{ROT} are given in Table 21-17. An additional parameter is the spatial stream index $i_{SS} = 1, 2, \ldots, N_{SS}$. The output of the third operation is a function of the spatial stream index. The interleaving is defined using three permutations. The first permutation is given by the rule shown in Equation (21-76). $$i = N_{ROW}(k \bmod N_{COL}) + \left\lfloor \frac{k}{N_{COL}} \right\rfloor, k = 0, 1, \ldots, N_{CBPSSI} - 1 \quad (21\text{-}76)$$ The second permutation is defined by the rule shown in Equation (21-77). $$j = s\left\lfloor \frac{i}{s} \right\rfloor + \left(i + N_{CBPSSI} - \left\lfloor \frac{N_{COL} \cdot i}{N_{CBPSSI}} \right\rfloor\right) \bmod s, \quad i = 0, 1, \ldots, N_{CBPSSI} - 1 \quad (21\text{-}77)$$ where s is defined in Equation (21-68)

Claim 1	Wi-Fi 6 Accused Instrumentalities
	(cont.) If $2 \le N_{SS} \le 4$, a frequency rotation is applied to the output of the second permutation as shown in Equation (21-78). $$r = \left\{ j - \left[(2(i_{SS}-1)) \bmod 3 + 3\left\lfloor \frac{i_{SS}-1}{3} \right\rfloor \right] \cdot N_{ROT} \cdot N_{BPSCS} \right\} \bmod N_{CBPSSI}, \quad (21\text{-}78)$$ $$j = 0, 1, \ldots, N_{CBPSSI} - 1$$ where $i_{SS} = 1, 2, \ldots, N_{SS}$ is the spatial steam index on which this interleaver is operating If $N_{SS} > 4$, a frequency rotation is applied to the output of the second permutation as shown in Equation (21-79). $$r = \{ j - J(i_{SS}) \cdot N_{ROT} \cdot N_{BPSCS} \} \bmod N_{CBPSSI}, j = 0, 1, \ldots, N_{CBPSSI} - 1 \quad (21\text{-}79)$$ where $i_{SS} = 1, 2, \ldots, N_{SS}$ is the spatial steam index on which this interleaver is operating, and $J(i_{SS})$ is an integer as defined in Table 21-18.

Claim 1	Wi-Fi 6 Accused Instrumentalities
	(cont.) **Table 21-18—$J(i_{SS})$ values** i_{SS} | $J(i_{SS})$ 1 | 0 2 | 5 3 | 2 4 | 7 5 | 3 6 | 6 7 | 1 8 | 4

Claim 1	Wi-Fi 6 Accused Instrumentalities
	Interleaving is a three-step permutation process that begins with interleaving using an interleaver based on the "Clause 17 interleaver," as indicated above. Per Clause 17, interleaving is performed separately for every OFDM symbol. The first permutation causes adjacent coded bits to be mapped onto nonadjacent subcarriers. The second causes adjacent coded bits to be mapped alternately onto less and more significant constellation bits:[29] **17.3.5.7 Data interleaving** All encoded data bits shall be interleaved by a block interleaver with a block size corresponding to the number of bits in a single OFDM symbol, N_{CBPS}. The interleaver is defined by a two-step permutation. The first permutation causes adjacent coded bits to be mapped onto nonadjacent subcarriers. The second causes adjacent coded bits to be mapped alternately onto less and more significant bits of the constellation and, thereby, long runs of low reliability (LSB) bits are avoided. As further indicated above, after the operations based on the Clause 17 interleaver have been applied, and if more than one spatial stream exists, a third operation called frequency rotation is applied to the additional spatial stream. The purpose of the interleaver, as indicated above, is to process OFDM symbols such that adjacent bits are not associated with a single subcarrier or adjacent subcarriers. Instead, adjacent bits are permuted onto nonadjacent subcarriers and onto more or less significant bits, i.e., reordered. It is anticipated that discovery will provide further details of the manner of infringement of the Accused Instrumentalities. In addition, the foregoing structures may be implemented in alternative configurations and usages that are equivalent to this claim element. In addition, the foregoing structures may be implemented in alternative configurations and usages that are equivalent to this claim element because they perform substantially the same function of receiving the second set of header bits of the second header field using the second OFDM symbol in

[29] IEEE Std 802.11-2020, Sec. 17.3.5.7.

Claim 1	Wi-Fi 6 Accused Instrumentalities
	a different order than the first set of header bits of the second header field received using the first OFDM symbol, in substantially the same way of receiving the second set of header bits of the second header field using the second OFDM symbol in a different order than the first set of header bits of the second header field received using the first OFDM symbol, to obtain the same result of providing additional diversity, reducing data loss and increasing decoding accuracy. For example, alternative equivalent configurations include the following, separately or in conjunction, which achieve the same functionalities provided by the claimed configurations: alternative configurations of HE PHY and PPDUs, including HE SU PPDU, HE MU PPDU, HE ER SU PPDU and HE TB PPDU; alternative configurations of the packet types or formats, headers fields, parts and bits, including HE-SIG-A, HE-SIG-A1, HE-SIG-A1-R, HE-SIG-A2, HE-SIG-A2-R, HE-SIG-B, HE-STF, HE-LTF, L-STF, L-LTF, L-SIG, RL-SIG and PE; alternative configurations of frequency and channel bands and bandwidth divisions, subdivisions, subchannels and subcarriers; alternative configurations of the HE STA, pre-HE [de]modulated and HE [de]modulated fields, transmitter, receiver, encoder, decoder, modulator and demodulator, and alternative symbols and symbol configuration, in transmitting, receiving, encoding, modulating or generating, including for alternative configurations for SU and/or MU.
wherein the fourth set of header bits of the second header field received using the fourth OFDM symbol are received in a different order than the third set of header bits of the second header field received using the third OFDM symbol, and	The Accused Instrumentalities comprise wherein the fourth set of header bits of the second header field received using the fourth OFDM symbol are received in a different order than the third set of header bits of the second header field received using the third OFDM symbol. For example, in the Wi-Fi 6 devices, the fourth set of header bits of the second header field received using the fourth OFDM symbol are received in a different order than the third set of header bits of the second header field received using the third OFDM symbol. For example, the bits of HE-SIG-A2-R are not interleaved, whereas the bits of HE-SIG-A2 are interleaved. This is indicated below:[30]

[30] IEEE Std 802.11ax-2021, Sec. 27.3.6.6.

Claim 1	Wi-Fi 6 Accused Instrumentalities
	b) For an HE ER SU PPDU, the HE-SIG-A field consists of four subfields: HE-SIG-A1, HE-SIG-A1-R, HE-SIG-A2, and HE-SIG-A2-R. The HE-SIG-A1 and HE-SIG-A1-R subfields have the same data bits while the HE-SIG-A2 and HE-SIG-A2-R subfields have the same data bits as defined in 27.3.11.7. The HE-SIG-A field is constructed as follows: 1) Obtain the HE-SIG-A fields from the TXVECTOR. Add the reserved bits, append the calculated CRC, and then append the N_{tail} tail bits as shown in 27.3.11.7. This results in 52 uncoded bits. 2) BCC encoder: Encode the data by a convolutional encoder at the rate $R = 1/2$ as described in 17.3.5.6. 3) BCC interleaver: Interleave the data bits of the HE-SIG-A1 and HE-SIG-A2 subfields as described in 27.3.12.8. The data bits of the HE-SIG-A1-R and HE-SIG-A2-R subfields are not interleaved. Interleaving the bits of HE-SIG-A2 and not interleaving the bits of HE-SIG-A2-R results in a different reception order of bits as between HE-SIG-A2 and HE-SIG-A2-R. It is anticipated that discovery will provide further details of the manner of infringement of the Accused Instrumentalities. In addition, the foregoing structures may be implemented in alternative configurations and usages that are equivalent to this claim element. In addition, the foregoing structures may be implemented in alternative configurations and usages that are equivalent to this claim element because they perform substantially the same function of receiving the fourth set of header bits of the second header field using the fourth OFDM symbol in a different order than the third set of header bits of the second header field using the third OFDM symbol, in substantially the same way of receiving the fourth set of header bits of the second header field using the fourth OFDM symbol in a different order than the third set of header bits of the second header field using the third OFDM symbol, to obtain the same result of providing additional diversity, reducing data loss and increasing decoding accuracy. For example, alternative equivalent configurations include the following, separately or in conjunction, which achieve the same functionalities provided by the claimed configurations: alternative configurations of HE PHY and PPDUs, including HE SU PPDU, HE MU PPDU, HE

Appendix I
Claim Chart for U.S. Patent No. 10,554,459

Claim 1	Wi-Fi 6 Accused Instrumentalities
	ER SU PPDU and HE TB PPDU; alternative configurations of the packet types or formats, headers fields, parts and bits, including HE-SIG-A, HE-SIG-A1, HE-SIG-A1-R, HE-SIG-A2, HE-SIG-A2-R, HE-SIG-B, HE-STF, HE-LTF, L-STF, L-LTF, L-SIG, RL-SIG and PE; alternative configurations of frequency and channel bands and bandwidth divisions, subdivisions, subchannels and subcarriers; alternative configurations of the HE STA, pre-HE [de]modulated and HE [de]modulated fields, transmitter, receiver, encoder, decoder, modulator and demodulator, and alternative symbols and symbol configuration, in transmitting, receiving, encoding, modulating or generating, including for alternative configurations for SU and/or MU.
wherein the first channel bandwidth is at least two times wider than the second channel bandwidth.	The Accused Instrumentalities comprise wherein the first channel bandwidth is at least two times wider than the second channel bandwidth. For example, Wi-Fi 6 devices comprise wherein the first channel bandwidth is at least two times wider than the second channel bandwidth. For example, the channel bandwidth for the HE SU PPDU is at least two times wider than the channel bandwidth for the HE ER SU PPDU. This is indicated below:[31]

[31] IEEE Std 802.11ax-2021, Sec. 27.3.11.7.2.

Claim 1	Wi-Fi 6 Accused Instrumentalities

Table 27-18—HE-SIG-A field of an HE SU PPDU and HE ER SU PPDU *(continued)*

Bit	Field	Number of bits	Description
B14	Reserved	1	Reserved and set to 1.
B15–B18	Spatial Reuse	4	Indicates whether spatial reuse modes are allowed during the transmission of this PPDU: Set to a value from Table 27-22 (see 26.11.6 and 26.10).
B19–B20	Bandwidth	2	For an HE SU PPDU: Set to 0 for 20 MHz. Set to 1 for 40 MHz. Set to 2 for 80 MHz. Set to 3 for 160 MHz and 80+80 MHz. For an HE ER SU PPDU: Set to 0 for 242-tone RU. Set to 1 for upper frequency 106-tone RU within the primary 20 MHz. Values 2 and 3 are reserved.

It is anticipated that discovery will provide further details of the manner of infringement of the Accused Instrumentalities.

In addition, the foregoing structures may be implemented in alternative configurations and usages that are equivalent to this claim element.

In addition, the foregoing structures may be implemented in alternative configurations and usages that are equivalent to this claim element because they perform substantially the same function of wherein the first channel bandwidth is at least two times wider than the second channel bandwidth, in substantially the same way of wherein the first channel bandwidth is at least two times wider than the second channel bandwidth to obtain the same result of providing additional diversity thereby increasing the likelihood of decoding the header information correctly.

For example, alternative equivalent configurations include the following, separately or in conjunction, which achieve the same functionalities provided by the claimed configurations: alternative configurations of HE PHY and PPDUs, including HE SU PPDU, HE MU PPDU, HE ER SU PPDU and HE TB PPDU; alternative configurations of the packet types or

Appendix I
Claim Chart for U.S. Patent No. 10,554,459

Claim 1	Wi-Fi 6 Accused Instrumentalities
	formats, headers fields, parts and bits, including HE-SIG-A, HE-SIG-A1, HE-SIG-A1-R, HE-SIG-A2, HE-SIG-A2-R, HE-SIG-B, HE-STF, HE-LTF, L-STF, L-LTF, L-SIG, RL-SIG and PE; alternative configurations of frequency and channel bands and bandwidth divisions, subdivisions, subchannels and subcarriers; alternative configurations of the HE STA, pre-HE [de]modulated and HE [de]modulated fields, transmitter, receiver, encoder, decoder, modulator and demodulator, and alternative symbols and symbol configuration, in transmitting, receiving, encoding, modulating or generating, including for alternative configurations for SU and/or MU.

Appendix I
Claim Chart for U.S. Patent No. 10,554,459

Claim 2	Wi-Fi 6 Accused Instrumentalities
The wireless transceiver of claim 1, wherein the reception of the same header bits in the second OFDM symbol provides diversity to increase a likelihood of correctly receiving header information of the second packet type.	The Accused Instrumentalities comprise wherein the reception of the same header bits in the second OFDM symbol provides diversity to increase a likelihood of correctly receiving header information of the second packet type. For example, Wi-Fi 6 devices comprise wherein the reception of the same header bits in the second OFDM symbol provides diversity to increase a likelihood of correctly receiving header information of the second packet type. This is indicated below:[32] **Sept 2015** **doc.: IEEE 802.11-15/0826r2** **HE-SIGA transmission for range extension** **Date:** 2015-07-12

[32]September 2015 Working Group Comments, IEEE Std 802.11-15/0826r2.

Claim 2	Wi-Fi 6 Accused Instrumentalities
	Transmitter of HE-SIG-A • **We propose to use the time repetition and bypassing the bit interleaver of repeated HE-SIG-A symbols to enhance robustness of HE-SIG-A in outdoor scenarios.** 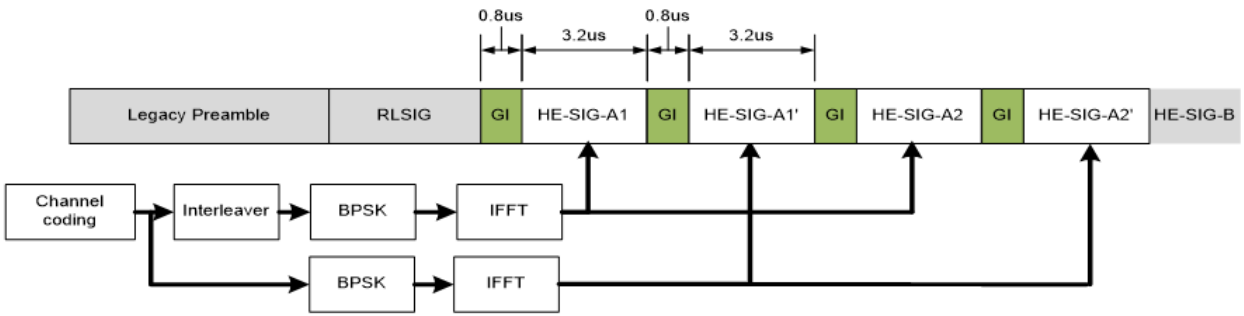

Claim 2	Wi-Fi 6 Accused Instrumentalities
	Conclusion • **Repeated HE-SIGA is needed in many use cases including range extension and outdoor channel operation.** • **An implementation friendly repetition method is proposed to harvest the frequency diversity gain.** These working group comments were adopted by the IEEE 802.11ax standard and are implemented by the Accused Instrumentalities. This is indicated below:[33]

[33] IEEE Std 802.11ax-2021, Sec. 27.3.5.

Appendix I
Claim Chart for U.S. Patent No. 10,554,459

Claim 2	Wi-Fi 6 Accused Instrumentalities
	Example transmitter block diagrams are shown in Figure 27-13 to Figure 27-22. The actual structure of the transmitter is implementation dependent. In particular, Figure 27-13 shows the transmit process for the L-SIG, RL-SIG, and HE-SIG-A fields of an HE PPDU using one frequency segment when the Beam Change subfield in the HE-SIG-A field is 1. These transmit blocks are also used to generate the L-STF and L-LTF fields of the HE PPDU when the Beam Change subfield in the HE-SIG-A field is 1, with the following exceptions: — The BCC encoder and interleaver and the constellation mapper are not used when generating the L-STF and L-LTF fields. — The BCC interleaver is not applied in the 2nd and the 4th OFDM symbols of the HE-SIG-A field in the HE ER SU PPDU. 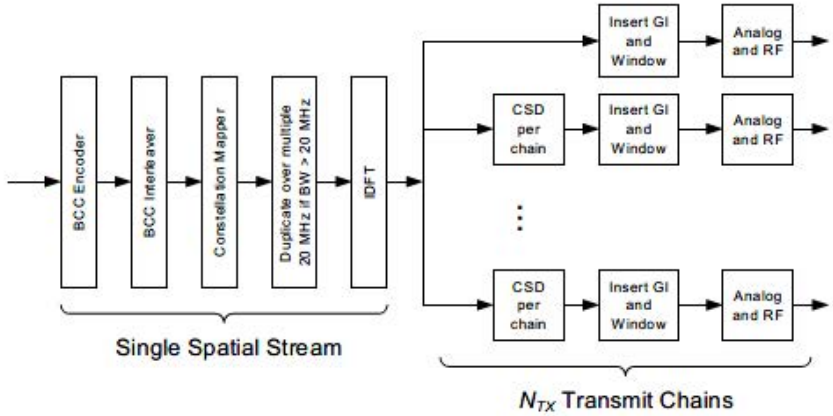 **Figure 27-13—Transmitter block diagram for L-SIG, RL-SIG, and HE-SIG-A fields for an HE SU PPDU and HE ER SU PPDU if Beam Change subfield is 1** It is anticipated that discovery will provide further details of the manner of infringement of the Accused Instrumentalities.

Claim 2	Wi-Fi 6 Accused Instrumentalities
	In addition, the foregoing structures may be implemented in alternative configurations and usages that are equivalent to this claim element. In addition, the foregoing structures may be implemented in alternative configurations and usages that are equivalent to this claim element because they perform substantially the same function of reception of the same header bits in the second OFDM symbol provides diversity to increase a likelihood of correctly receiving header information of the second packet type, in substantially the same way of reception of the same header bits in the second OFDM symbol provides diversity to increase a likelihood of correctly receiving header information of the second packet type, to obtain the same result of providing additional diversity, reducing data loss and increasing decoding accuracy. For example, alternative equivalent configurations include the following, separately or in conjunction, which achieve the same functionalities provided by the claimed configurations: alternative configurations of HE PHY and PPDUs, including HE SU PPDU, HE MU PPDU, HE ER SU PPDU and HE TB PPDU; alternative configurations of the packet types or formats, headers fields, parts and bits, including HE-SIG-A, HE-SIG-A1, HE-SIG-A1-R, HE-SIG-A2, HE-SIG-A2-R, HE-SIG-B, HE-STF, HE-LTF, L-STF, L-LTF, L-SIG, RL-SIG and PE; alternative configurations of frequency and channel bands and bandwidth divisions, subdivisions, subchannels and subcarriers; alternative configurations of the HE STA, pre-HE [de]modulated and HE [de]modulated fields, transmitter, receiver, encoder, decoder, modulator and demodulator, and alternative symbols and symbol configuration, in transmitting, receiving, encoding, modulating or generating, including for alternative configurations for SU and/or MU.

Appendix I
Claim Chart for U.S. Patent No. 10,554,459

Claim 3	Wi-Fi 6 Accused Instrumentalities
The wireless transceiver of claim 1, wherein the reception of the same header bits in the fourth OFDM symbol provides diversity to increase a likelihood of correctly receiving header information of the second packet type.	The Accused Instrumentalities comprise wherein the reception of the same header bits in the fourth OFDM symbol provides diversity to increase a likelihood of correctly receiving header information of the second packet type. For example, Wi-Fi 6 devices comprise wherein the reception of the same header bits in the fourth OFDM symbol provides diversity to increase a likelihood of correctly receiving header information of the second packet type. This is indicated below:[34]

[34]September 2015 Working Group Comments, IEEE Std 802.11-15/0826r2.

Claim 3	Wi-Fi 6 Accused Instrumentalities
	Sept 2015 **doc.: IEEE 802.11-15/0826r2** **HE-SIGA transmission for range extension** **Date:** 2015-07-12 **Transmitter of HE-SIG-A** • **We propose to use the time repetition and bypassing the bit interleaver of repeated HE-SIG-A symbols to enhance robustness of HE-SIG-A in outdoor scenarios.** 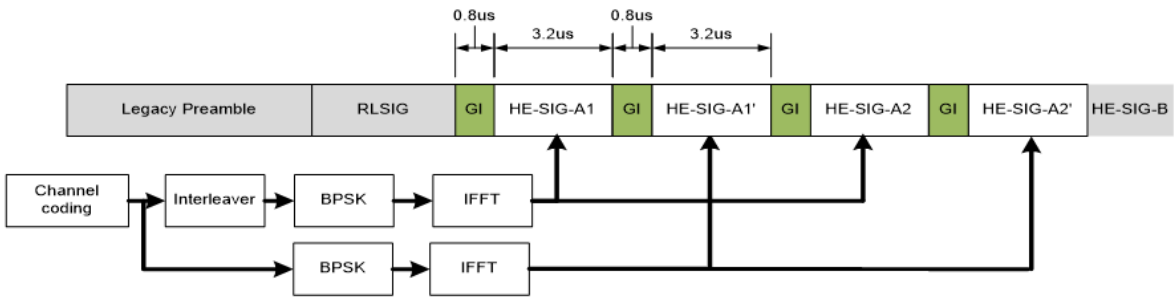

Claim 3	Wi-Fi 6 Accused Instrumentalities
	Conclusion • **Repeated HE-SIGA is needed in many use cases including range extension and outdoor channel operation.** • **An implementation friendly repetition method is proposed to harvest the frequency diversity gain.** These working group comments were adopted in the IEEE 802.11ax standard and are implemented by the Accused Instrumentalities. This is indicated below:[35] Example transmitter block diagrams are shown in Figure 27-13 to Figure 27-22. The actual structure of the transmitter is implementation dependent. In particular, Figure 27-13 shows the transmit process for the L-SIG, RL-SIG, and HE-SIG-A fields of an HE PPDU using one frequency segment when the Beam Change subfield in the HE-SIG-A field is 1. These transmit blocks are also used to generate the L-STF and L-LTF fields of the HE PPDU when the Beam Change subfield in the HE-SIG-A field is 1, with the following exceptions: — The BCC encoder and interleaver and the constellation mapper are not used when generating the L-STF and L-LTF fields. — The BCC interleaver is not applied in the 2nd and the 4th OFDM symbols of the HE-SIG-A field in the HE ER SU PPDU.

[35] IEEE Std 802.11ax-2021, Sec. 27.3.5.

Claim 3	Wi-Fi 6 Accused Instrumentalities
	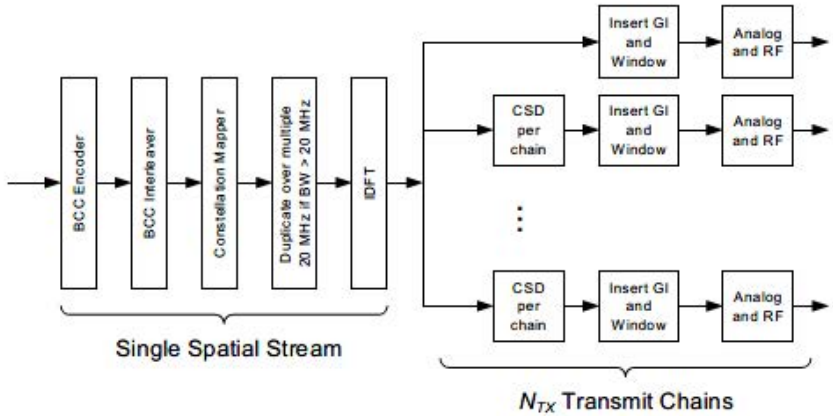 **Figure 27-13—Transmitter block diagram for L-SIG, RL-SIG, and HE-SIG-A fields for an HE SU PPDU and HE ER SU PPDU if Beam Change subfield is 1** It is anticipated that discovery will provide further details of the manner of infringement of the Accused Instrumentalities. In addition, the foregoing structures may be implemented in alternative configurations and usages that are equivalent to this claim element. In addition, the foregoing structures may be implemented in alternative configurations and usages that are equivalent to this claim element because they perform substantially the same function of reception of the same header bits in the fourth OFDM symbol provides diversity to increase a likelihood of correctly receiving header information of the second packet type, in substantially the same way of reception of the same header bits in the fourth OFDM symbol provides diversity to increase a likelihood of correctly receiving header information of the second packet type, to obtain the same result of providing additional diversity, reducing data loss and increasing decoding accuracy.

Appendix I
Claim Chart for U.S. Patent No. 10,554,459

Claim 3	Wi-Fi 6 Accused Instrumentalities
	For example, alternative equivalent configurations include the following, separately or in conjunction, which achieve the same functionalities provided by the claimed configurations: alternative configurations of HE PHY and PPDUs, including HE SU PPDU, HE MU PPDU, HE ER SU PPDU and HE TB PPDU; alternative configurations of the packet types or formats, headers fields, parts and bits, including HE-SIG-A, HE-SIG-A1, HE-SIG-A1-R, HE-SIG-A2, HE-SIG-A2-R, HE-SIG-B, HE-STF, HE-LTF, L-STF, L-LTF, L-SIG, RL-SIG and PE; alternative configurations of frequency and channel bands and bandwidth divisions, subdivisions, subchannels and subcarriers; alternative configurations of the HE STA, pre-HE [de]modulated and HE [de]modulated fields, transmitter, receiver, encoder, decoder, modulator and demodulator, and alternative symbols and symbol configuration, in transmitting, receiving, encoding, modulating or generating, including for alternative configurations for SU and/or MU.

Appendix I
Claim Chart for U.S. Patent No. 10,554,459

Claim 5	Wi-Fi 6 Accused Instrumentalities
The wireless transceiver of claim 1, wherein the wireless transceiver supports one or more wireless standards.	The Accused Instrumentalities comprise wherein the wireless transceiver supports one or more wireless standards. For example, the Accused Instrumentalities comprise a wireless transceiver that supports the IEEE 802.11ax standard, also known as WiFi 6. For example, Defendants advertise the Accused Instrumentalities as utilizing a Wi-Fi 6 or 802.11ax transceiver, such as a wireless card or modem, e.g., Wireless Intel Dual Band Wi-Fi 6 AX211 2x2 802.11ax 160MHz wireless card, and/or as Wi-Fi CERTIFIED 6.[36] [37] The standard requires that 802.11ax products be capable of transmitting and receiving PPDUs that are compliant with the mandatory requirements of the PHY specifications as follows:[38]

[36] *See, e.g.*, https://www.dell.com/en-us/shop/dell-laptops/sr/laptops/wi-fi-6?appliedRefinements=37766 (search results for laptops filtered by "Wi-Fi 6"); https://www.dell.com/en-us/shop/desktop-computers/sr/desktops/wi-fi-6?appliedRefinements=38804 (search results for desktops filtered by "Wi-Fi 6"); and https://www.dell.com/en-us/shop/dell-laptops/latitude-3520-laptop/spd/latitude-15-3520-laptop/s061l3520us (showing "Intel Dual Band Wi-Fi 6 AX201 2x2 802.11ax 160MHz + Bluetooth 5.1" for "Wireless" for the Latitude 3520 Laptop).

[37] *See, e.g.*, https://www.hp.com/us-en/shop/sitesearch?keyword=wi-fi%206 (search results for products with keyword "Wi-Fi 6"); https://www.hp.com/us-en/shop/pdp/hp-spectre-x360-2-in-1-laptop-16-f1747nr (showing "Intel® Wi-Fi 6E AX211 (2x2)" for the "Wireless Technology" of HP Spectre x360 2-in-1 Laptop 16-f1747nr); https://www.hp.com/us-en/shop/pdp/hp-envy-desktop-te02-0250xt-pc-3y3r0av-1 (showing "Realtek Wi-Fi 6 (2x2)" for the "Wireless Technology" of HP ENVY Desktop TE02-0250xt PC).

[38] IEEE Std 802.11ax-2021, Sec. 27.3.11.7.2

Claim 5	Wi-Fi 6 Accused Instrumentalities
	27. High-efficiency (HE) PHY specification **27.1 Introduction** **27.1.1 Introduction to the HE PHY** Clause 27 specifies the PHY entity for a high-efficiency (HE) orthogonal frequency division multiplexing (OFDM) system. In addition to the requirements in Clause 27, an HE STA shall be capable of transmitting and receiving PPDUs that are compliant with the mandatory requirements of the following PHY specifications: — Clause 19 and Clause 21 if the HE STA supports an operating channel width greater than or equal to 80 MHz and is operating in the 5 GHz band. — Clause 19 and Clause 21 transmission and reception on 20 MHz channel width (see 26.17.1) if the HE STA is a 20 MHz-only non-AP HE STA and is operating in the 5 GHz band. — Clause 19 if the HE STA is operating in the 2.4 GHz band. — Clause 17 if the HE STA is operating in the 6 GHz band. It is anticipated that discovery will provide further details of the manner of infringement of the Accused Instrumentalities. In addition, the foregoing structures may be implemented in alternative configurations and usages that are equivalent to this claim element. In addition, the foregoing structures may be implemented in alternative configurations and usages that are equivalent to this claim element because they perform substantially the same function of a wireless transceiver wherein the wireless transceiver supports one or more wireless standards, in substantially the same way of a wireless transceiver wherein the wireless transceiver supports one or more wireless standards to obtain the same result of providing additional diversity thereby increasing the likelihood of decoding the header information correctly. For example, alternative equivalent configurations include the following, separately or in conjunction, which achieve the same functionalities provided by the claimed configurations: alternative configurations of HE PHY and PPDUs, including HE SU PPDU, HE

Appendix I
Claim Chart for U.S. Patent No. 10,554,459

Claim 5	Wi-Fi 6 Accused Instrumentalities
	MU PPDU, HE ER SU PPDU and HE TB PPDU; alternative configurations of the packet types or formats, headers fields, parts and bits, including HE-SIG-A, HE-SIG-A1, HE-SIG-A1-R, HE-SIG-A2, HE-SIG-A2-R, HE-SIG-B, HE-STF, HE-LTF, L-STF, L-LTF, L-SIG, RL-SIG and PE; alternative configurations of frequency and channel bands and bandwidth divisions, subdivisions, subchannels and subcarriers; alternative configurations of the HE STA, pre-HE [de]modulated and HE [de]modulated fields, transmitter, receiver, encoder, decoder, modulator and demodulator, and alternative symbols and symbol configuration, in transmitting, receiving, encoding, modulating or generating, including for alternative configurations for SU and/or MU.

<table>
<tr><th>Claim 7</th><th>Wi-Fi 6 Accused Instrumentalities</th></tr>
<tr><td>The wireless transceiver of claim 1, wherein the first header field indicates the type of packet.</td><td>

The Accused Instrumentalities comprise wherein the first header field indicates the type of packet. This is indicated below:[39]

27.3.11.7.2 Content

The HE-SIG-A field for an HE SU PPDU or an HE ER SU PPDU contains the fields listed in Table 27-18.

Table 27-18—HE-SIG-A field of an HE SU PPDU and HE ER SU PPDU

<table>
<tr><th>Bit</th><th>Field</th><th>Number of bits</th><th>Description</th></tr>
<tr><td colspan="4">HE-SIG-A1 subfield of HE-SIG-A field</td></tr>
<tr><td>B0</td><td>Format</td><td>1</td><td>Differentiate an HE SU PPDU and HE ER SU PPDU from an HE TB PPDU:
Set to 1 for an HE SU PPDU and HE ER SU PPDU.</td></tr>
</table>

It is anticipated that discovery will provide further details of the manner of infringement of the Accused Instrumentalities.

In addition, the foregoing structures may be implemented in alternative configurations and usages that are equivalent to this claim element.

In addition, the foregoing structures may be implemented in alternative configurations and usages that are equivalent to this claim element because they perform substantially the same function of indicating the type of packet, in substantially the same way of indicating using a header bit, to obtain the same result of providing additional diversity, reducing data loss and increasing decoding accuracy.

For example, alternative equivalent configurations include the following, separately or in conjunction, which achieve the same functionalities provided by the claimed configurations: alternative configurations of HE PHY and PPDUs, including HE SU PPDU, HE

</td></tr>
</table>

[39] IEEE Std 802.11ax-2021, Sec. 27.3.11.7.2

	MU PPDU, HE ER SU PPDU and HE TB PPDU; alternative configurations of the packet types or formats, headers fields, parts and bits, including HE-SIG-A, HE-SIG-A1, HE-SIG-A1-R, HE-SIG-A2, HE-SIG-A2-R, HE-SIG-B, HE-STF, HE-LTF, L-STF, L-LTF, L-SIG, RL-SIG and PE; alternative configurations of frequency and channel bands and bandwidth divisions, subdivisions, subchannels and subcarriers; alternative configurations of the HE STA, pre-HE [de]modulated and HE [de]modulated fields, transmitter, receiver, encoder, decoder, modulator and demodulator, and alternative symbols and symbol configuration, in transmitting, receiving, encoding, modulating or generating, including for alternative configurations for SU and/or MU.

<table>
<tr><th>Claim 8</th><th>Wi-Fi 6 Accused Instrumentalities</th></tr>
<tr><td>The wireless transceiver of claim 1, wherein the second header field indicates the type of packet.</td><td>

The Accused Instrumentalities comprise wherein the second header field indicates the type of packet. This is indicated below:[40]

27.3.11.7.2 Content

The HE-SIG-A field for an HE SU PPDU or an HE ER SU PPDU contains the fields listed in Table 27-18.

Table 27-18—HE-SIG-A field of an HE SU PPDU and HE ER SU PPDU

<table>
<tr><th>Bit</th><th>Field</th><th>Number of bits</th><th>Description</th></tr>
<tr><td colspan="4">HE-SIG-A1 subfield of HE-SIG-A field</td></tr>
<tr><td>B0</td><td>Format</td><td>1</td><td>Differentiate an HE SU PPDU and HE ER SU PPDU from an HE TB PPDU:
Set to 1 for an HE SU PPDU and HE ER SU PPDU.</td></tr>
</table>

It is anticipated that discovery will provide further details of the manner of infringement of the Accused Instrumentalities.

In addition, the foregoing structures may be implemented in alternative configurations and usages that are equivalent to this claim element.

In addition, the foregoing structures may be implemented in alternative configurations and usages that are equivalent to this claim element because they perform substantially the same function of indicating the type of packet, in substantially the same way of indicating the type of packet, to obtain the same result of providing additional diversity, reducing data loss and increasing decoding accuracy.

For example, alternative equivalent configurations include the following, separately or in conjunction, which achieve the same functionalities provided by the claimed configurations: alternative configurations of HE PHY and PPDUs, including HE SU PPDU, HE

</td></tr>
</table>

[40] IEEE Std 802.11ax-2021, Sec. 27.3.11.7.2

	MU PPDU, HE ER SU PPDU and HE TB PPDU; alternative configurations of the packet types or formats, headers fields, parts and bits, including HE-SIG-A, HE-SIG-A1, HE-SIG-A1-R, HE-SIG-A2, HE-SIG-A2-R, HE-SIG-B, HE-STF, HE-LTF, L-STF, L-LTF, L-SIG, RL-SIG and PE; alternative configurations of frequency and channel bands and bandwidth divisions, subdivisions, subchannels and subcarriers; alternative configurations of the HE STA, pre-HE [de]modulated and HE [de]modulated fields, transmitter, receiver, encoder, decoder, modulator and demodulator, and alternative symbols and symbol configuration, in transmitting, receiving, encoding, modulating or generating, including for alternative configurations for SU and/or MU.

Appendix I
Claim Chart for U.S. Patent No. 10,554,459

Claim 9	Wi-Fi 6 Accused Instrumentalities
A method of operating a wireless OFDM (Orthogonal Frequency Division Multiplexing) transceiver comprising:	The Accused Instrumentalities comprise a method of operating a wireless OFDM (Orthogonal Frequency Division Multiplexing) transceiver that comprises the following technical elements and limitations, as described in the Wi-Fi 6 Standard. For example, devices that comply with the IEEE 802.11ax standard ("Wi-Fi 6") comprise a wireless OFDM (Orthogonal Frequency Division Multiplexing) transceiver that is capable of transmitting and receiving ("transceiving") physical layer protocol data units (PPDUs). See claim 1 (preamble).
receiving, by a wireless OFDM communications receiver over a wireless communication channel, a first packet type in a first channel bandwidth, the first packet type comprising a first header field, wherein the first header field comprises two parts, a first part comprising a first set of header bits of the first header field and a second part comprising a second set of header bits of the first header field, wherein the first set of header bits of the first header field is different than the second set of header bits of the first header field; and	The Accused Instrumentalities comprise receiving, by a wireless OFDM communications receiver over a wireless communication channel, a first packet type in a first channel bandwidth, the first packet type comprising a first header field, wherein the first header field comprises two parts, a first part comprising a first set of header bits of the first header field and a second part comprising a second set of header bits of the first header field, wherein the first set of header bits of the first header field is different than the second set of header bits of the first header field. See claim 1 ("a wireless OFDM communications receiver operable to receive, over a wireless communication channel, a first packet type in a first channel bandwidth, the first packet type comprising a first header field, wherein the first header field comprises two parts, a first part comprising a first set of header bits of the first header field and a second part comprising a second set of header bits of the first header field, wherein the first set of header bits of the first header field is different than the second set of header bits of the first header field").
demodulating, by a demodulator, a first OFDM symbol followed by a second OFDM symbol, wherein the	The Accused Instrumentalities comprise demodulating, by a demodulator, a first OFDM symbol followed by a second OFDM symbol, wherein the first OFDM symbol is used to receive the first part of the first header field and the second OFDM symbol is used to receive the second part of the first header field. See claim 1 ("a demodulator operable to demodulate a first OFDM symbol

Claim 9	Wi-Fi 6 Accused Instrumentalities
first OFDM symbol is used to receive the first part of the first header field and the second OFDM symbol is used to receive the second part of the first header field;	followed by a second OFDM symbol, wherein the first OFDM symbol is used to receive the first part of the first header field and the second OFDM symbol is used to receive the second part of the first header field”).
receiving, by the wireless OFDM communications receiver over the wireless communications channel, a second packet type in a second channel bandwidth, the second packet type comprising a second header field, wherein the second header field comprises four parts, a first part comprising a first set of header bits of the second header field, a second part comprising a second set of header bits of the second header field, a third part comprising a third set of header bits of the second header field and a fourth part comprising a fourth set of header bits of the second header field,	The Accused Instrumentalities comprise receiving, by the wireless OFDM communications receiver over the wireless communications channel, a second packet type in a second channel bandwidth, the second packet type comprising a second header field, wherein the second header field comprises four parts, a first part comprising a first set of header bits of the second header field, a second part comprising a second set of header bits of the second header field, a third part comprising a third set of header bits of the second header field and a fourth part comprising a fourth set of header bits of the second header field. See claim 1 (“the wireless OFDM communications receiver further operable to receive, over the wireless communications channel, a second packet type in a second channel bandwidth, the second packet type comprising a second header field, wherein the second header field comprises four parts, a first part comprising a first set of header bits of the second header field, a second part comprising a second set of header bits of the second header field, a third part comprising a third set of header bits of the second header field and a fourth part comprising a fourth set of header bits of the second header field”).
wherein the first set of header bits of the second header field	The Accused Instrumentalities comprise wherein the first set of header bits of the second header field is the same as the second set of header bits of the second header field, wherein the third set of

Claim 9	Wi-Fi 6 Accused Instrumentalities
is the same as the second set of header bits of the second header field, wherein the third set of header bits of the second header field is the same as the fourth set of header bits of the second header field, and	header bits of the second header field is the same as the fourth set of header bits of the second header field. See claim 1 ("wherein the first set of header bits of the second header field is the same as the second set of header bits of the second header field, wherein the third set of header bits of the second header field is the same as the fourth set of header bits of the second header field").
demodulating, by the demodulator, a first OFDM symbol followed by a second OFDM symbol followed by a third OFDM symbol followed by a fourth OFDM symbol, wherein the first OFDM symbol is used to receive the first part of the second header field, the second OFDM symbol is used to receive the second part of the second header field, the third OFDM symbol is used to receive the third part of the second header field, the fourth OFDM symbol is used to receive the fourth part of the second header field,	The Accused Instrumentalities comprise demodulating, by the demodulator, a first OFDM symbol followed by a second OFDM symbol followed by a third OFDM symbol followed by a fourth OFDM symbol, wherein the first OFDM symbol is used to receive the first part of the second header field, the second OFDM symbol is used to receive the second part of the second header field, the third OFDM symbol is used to receive the third part of the second header field, the fourth OFDM symbol is used to receive the fourth part of the second header field. See claim 1 ("the demodulator further operable to demodulate a first OFDM symbol followed by a second OFDM symbol followed by a third OFDM symbol followed by a fourth OFDM symbol, wherein the first OFDM symbol is used to receive the first part of the second header field, the second OFDM symbol is used to receive the second part of the second header field, the third OFDM symbol is used to receive the third part of the second header field, the fourth OFDM symbol is used to receive the fourth part of the second header field").
wherein the second set of header bits of the second header field received using	The Accused Instrumentalities comprise wherein the second set of header bits of the second header field received using the second OFDM symbol are received in a different order than the first set of header bits of the second header field received using the first OFDM symbol. See claim 1

Appendix I
Claim Chart for U.S. Patent No. 10,554,459

Claim 9	Wi-Fi 6 Accused Instrumentalities
the second OFDM symbol are received in a different order than the first set of header bits of the second header field received using the first OFDM symbol,	("wherein the second set of header bits of the second header field received using the second OFDM symbol are received in a different order than the first set of header bits of the second header field received using the first OFDM symbol").
wherein the fourth set of header bits of the second header field received using the fourth OFDM symbol are received in a different order than the third set of header bits of the second header field received using the third OFDM symbol, and	The Accused Instrumentalities comprise wherein the fourth set of header bits of the second header field received using the fourth OFDM symbol are received in a different order than the third set of header bits of the second header field received using the third OFDM symbol. See claim 1 ("wherein the fourth set of header bits of the second header field received using the fourth OFDM symbol are received in a different order than the third set of header bits of the second header field received using the third OFDM symbol").
wherein the first channel bandwidth is at least two times wider than the second channel bandwidth.	The Accused Instrumentalities comprise wherein the first channel bandwidth is at least two times wider than the second channel bandwidth. See claim 1 ("wherein the first channel bandwidth is at least two times wider than the second channel bandwidth").

Appendix I
Claim Chart for U.S. Patent No. 10,554,459

Claim 10	Wi-Fi 6 Accused Instrumentalities
The method of claim 9, wherein the reception of the same header bits in the second OFDM symbol provides diversity to increase a likelihood of correctly receiving header information of the second packet type.	The Accused Instrumentalities comprise wherein the reception of the same header bits in the second OFDM symbol provides diversity to increase a likelihood of correctly communicating header information of the second packet type. See claim 2.

Appendix I
Claim Chart for U.S. Patent No. 10,554,459

Claim 11	Wi-Fi 6 Accused Instrumentalities
The method of claim 9, wherein the reception of the same header bits in the fourth OFDM symbol provides diversity to increase a likelihood of correctly receiving header information of the second packet type.	The Accused Instrumentalities comprise wherein the reception of the same header bits in the fourth OFDM symbol provides diversity to increase a likelihood of correctly communicating header information of the second packet type. See claim 3.

Appendix I
Claim Chart for U.S. Patent No. 10,554,459

Claim 13	Wi-Fi 6 Accused Instrumentalities
The method of claim 9, wherein the wireless transceiver supports one or more wireless standards.	The Accused Instrumentalities comprise wherein the wireless transceiver supports one or more wireless standards. See claim 5.