UNITED STATES PATENT AND TRADEMARK OFFICE

BEFORE THE PATENT TRIAL AND APPEAL BOARD

AYLO FREESITES LTD.,

Petitioner

v.

WELLCOMEMAT, LLC,

Patent Owner

Case No. IPR2024-00710

U.S. Patent No. 8,307,286

CORRECTED PATENT OWNER PRELIMINARY RESPONSE PURSUANT TO 37 C.F.R. § 42.107

TABLE OF CONTENTS

Page

I. INTRODUCTION 1

II. BACKGROUND 4

A. Procedural History 4

B. The '286 Patent 4

1. The Invention 4

2. Prosecution History 9

III. CLAIM CONSTRUCTION 10

IV. PERSON OF ORDINARY SKILL IN THE ART 11

V. RELEVANT LEGAL STANDARDS 12

A. Anticipation 12

B. Obviousness 13

VI. THE CHALLENGED CLAIMS ARE NOT UNPATENTABLE AS ANTICIPATED UNDER § 102 BY GUPTA (GROUND 1) 14

A. Claim 13 is patentable because Gupta fails to disclose *providing a computer system … comprising a video editing environment, and being disposed at a server side of a public network* (Limitation 13.1) 14

B. Claim 13 is patentable because Gupta fails to disclose *receiving a set of video information at the video editing environment using the computer system* (Limitation 13.2) 21

C. Claims 14-15 and 18-20 Are Patentable 23

D. Dependent Claim 15 also is patentable because Gupta fails to disclose *receiving an edit mode entry signal over the network from the client terminal representing entry into the cue point edit mode, and switching the video editing environment to the cue point editing mode in response to receiving the edit mode entry signal* 23

VII. THE CHALLENGED CLAIMS ARE NOT UNPATENTABLE AS ANTICIPATED UNDER § 102 BY FEGAN (GROUND 2)....25

A. Claim 13 is patentable because Fegan fails to disclose *providing a computer system … comprising a video editing environment, and being disposed at a server side of a public network* (Limitation 13.1)....25

B. Claims 14-15 and 18-20 Are Patentable....31

C. Dependent Claim 15 also is patentable because Fegan also fails to disclose *receiving an edit mode entry signal over the network from the client terminal representing entry into the cue point edit mode, and switching the video editing environment to the cue point editing mode in response to receiving the edit mode entry signal* 32

VIII. THE CHALLENGED CLAIMS ARE NOT UNPATENTABLE AS OBVIOUS UNDER § 103 BY KIM (GROUND 3)....33

A. Claim 13 is patentable because Kim fails to disclose or suggest *providing a computer system … comprising a video editing environment, and being disposed at a server side of a public network* (Limitation 13.1) 33

B. Claims 14-15 and 18-20 Are Patentable....35

C. Dependent Claim 15 also is patentable because both Kim and Sull fail to teach or suggest *receiving an edit mode entry signal over the network from the client terminal representing entry into the cue point edit mode, and switching the video editing environment to the cue point editing mode in response to receiving the edit mode entry signal* 35

IX. THE CHALLENGED CLAIMS ARE NOT UNPATENTABLE AS OBVIOUS UNDER § 103 BY KIM AND GUPTA (GROUND 4) 37

X. THE CHALLENGED CLAIMS ARE NOT UNPATENTABLE AS OBVIOUS UNDER § 103 BY VASILEVSKY AND LOGAN (GROUND 5) 38

A. Claim 13 is patentable because Vasilevsky and Logan fail to teach or suggest *providing a computer system … comprising a video editing environment, and being disposed at a server side of a public network* (Limitation 13.1) 38

B. Claim 13 is patentable because Vasilevsky and Logan also fail to teach or suggest *receiving a cue point editing command over the network from a remote client terminal disposed at the client side of the public network using the computer system* and *modifying a portion of the cue point information at the server side … according to the cue point editing command received … from the client terminal* (Limitations 13.4 and 13.5) 42

C. Claims 14-15 and 18-20 Are Patentable 43

D. Dependent Claim 15 also is patentable because Vasilevsky and Logan fail to teach or suggest *receiving an edit mode entry signal over the network from the client terminal representing entry into the cue point edit mode, and switching the video editing environment to the cue point editing mode in response to receiving the edit mode entry signal* 43

XI. THE PETITION SHOULD BE DENIED PURSUANT TO *FINTIV* 44

XII. CONCLUSION 48

TABLE OF AUTHORITIES

Page(s)

Cases

Continental Can Co. v. Monsanto Co.,
948 F.2d 1264 (Fed. Cir. 1991) 31

Graham v. John Deere Co.,
383 U.S. 1 (1966).....13

In re GPAC, Inc.,
57 F.3d 1573 (Fed. Cir. 1995) 12

In re Robertson,
169 F.3d 743 (Fed. Cir. 1999) 31

King Pharm., Inc. v. Eon Labs, Inc.,
616 F.3d 1267 (Fed. Cir. 2010) 12

KSR Int'l Co. v. Teleflex Inc.,
127 S.Ct. 1727 (2007).....14

Maxell Ltd. v. Apple Inc.,
2020 WL 10458088 (E.D. Tex. 2020).....45

Net MoneyIn v. Verisign,
545 F.3d 1359 (Fed. Cir. 2008) 13, 22

Personalized Media Communications, LLC v. Apple Inc.,
952 F3d 1336 (Fed. Cir. 2020) 18

Pfizer, Inc. v. Apotex, Inc.,
480 F.3d 1348 (Fed. Cir. 2007) 14

Phillips v. AWH Corp.,
415 F.3d 1303 (Fed. Cir. 2005) 17

Regents of Univ. of California v. Broad Institute, Inc.,
903 F.3d 1286 (Fed. Cir. 2018) 14

Rosco, Inc. v. Mirror Lite Co.,
304 F.3d 1373 (Fed. Cir. 2002) 31

Statutes

35 U.S.C. § 103 13

Agency Decisions

Apple Inc. v. Fintiv, Inc.,
IPR2020-00019, Paper 11 (PTAB Mar. 20, 2020) (prec.) 45

CommScope Technologies LLC v. Dali Wireless, Inc.,
IPR2022-01242, Paper No. 23 (PTAB Feb. 27, 2023) (prec.) 3, 47

Sotera Wireless, Inc. v. Masimo Corp.,
IPR2020-01015, Paper 12 (PTAB Dec. 1, 2020) (prec.), 2020 WL
7049372.....4, 46

PATENT OWNER'S EXHIBIT LIST

Ex. No.	Description
Ex. 2001	Docket Control Order in *WellcomeMat, LLC v. Aylo Holdings, S.à r.l., et al.*, Case No. 23-cv-483 (E.D. Tex.) (Dkt. 37).
Ex. 2002	WellcomeMat website at https://go.wellcomemat.com/integrate-videos (accessed 4-18-2024)
Ex. 2003	Unified Patents summary of IPR2024-00710 at https://portal.unifiedpatents.com/ptab/case/IPR2024-00710 (accessed on April 18, 2024).
Ex. 2004	U.S. Pat. App. Pub. No. 2007/0263984 (Sterner '395 App)
Ex. 2005	U.S. Pat. No. 8,170,395 (Sterner '395 Patent)
Ex. 2006	FWD, IPR2020-01697, Paper 38, 4-15-2022
Ex. 2007	National Judicial Caseload Profile Statistics
Ex. 2008	Amended complaint in *WellcomeMat, LLC v. Aylo Holdings, S.à r.l., et al.*, Case No. 23-cv-483 (E.D. Tex.)
Ex. 2009	U.S. Pat. Pub. 2005/0152665A1 (Shibata)
Ex. 2010	U.S. Pat. Pub. 2004/0039934 (Land)
Ex. 2011	Aylo Invalidity Contentions (5-6-2024)
Ex. 2012	What is MYSQL? (accessed at oracle.com on 6-23-2024)

I. INTRODUCTION

WellcomeMat, LLC ("Patent Owner" or "WellcomeMat") is a practicing entity that provides video marketing, distribution, and analytics products and services for the real estate industry, including video software provided for the Multiple Listing Service (MLS) and their participants. As implemented by WellcomeMat, its patented technology enables real estate companies and agents to provide full-motion videos of homes that include cue points that designate specific locations in the video and that can be selected by a viewer to quickly navigate to specific footage of the kitchen, living room, dining room, basement, and so forth. WellcomeMat's customers and partners include Mansion Global (global real estate market digital publication), The Group Real Estate (brokerage and property management services), Luxury Portfolio International, and the Financial Times. WellcomeMat marks its products and service offerings with U.S. Pat. No. 8,307,286 ("the '286 Patent," at issue in this IPR) and U.S. Pat. No. 8,170,395. See https://go.wellcomemat.com/integrate-videos (Ex. 2002, 5-6).

Aylo Freesites Ltd. ("Petitioner" or "Aylo") conducts business under the brand name "Pornhub," among others, to distribute adult video content over a variety of websites including Pornhub, YouPorn, XTube, Babes.com, ModelHub, RedTube, Twistys, and others. Ex. 2004, 3 (Amended Complaint, ¶¶ 11, 13). Aylo operates under and through a myriad of affiliate companies headed by an ultimate parent

company, Aylo S.à r.l., which was previously known as MindGeek Aylo S.à r.l., Ex. 2004, 5. (Amended Complaint, ¶¶ 17-22).

Aylo was on notice of the subject matter of the ’286 Patent at least as early as 2020 when it filed an IPR petition against a third-party patent in which Aylo relied on Sterner et al., U.S. Patent App. Pub. No. 2007/0263984 A1, which ultimately issued as U.S. Pat. No. U.S. Pat. No. 8,170,395. See Ex. 2004 (U.S. Pat. App. Pub. No. 2007/0263984) (“Sterner ’395 App”); Ex. 2005 (U.S. Pat. No. 8,170,395) (“Sterner ’395 Patent”). The Sterner ’395 Patent and the ’286 Patent at issue in the instant IPR are related “sister” patents: they were filed on the same day and assert priority to the same provisional application, U.S. Prov. 60/746,645. Ex. 1001 (’286 Patent, Cover (60)); Ex. 2005 (Sterner ’395 Patent, Cover (60)). They also have substantially identical specifications. The third-party patent that Aylo challenged in the prior action was ultimately found to be unpatentable over the Sterner ’395 Patent. Ex. 2006 (FWD in IPR2020-01697), 10, 63.

The Board should reach a different result here. *First,* the Board should decline to institute this IPR because none of the asserted grounds demonstrates a reasonable likelihood that at least one challenged claim is unpatentable. In particular, as explained during prosecution, a key innovation of the ’286 Patent was that it enabled cue point management to take place remotely over a public client-server architecture, which increased the flexibility and manageability of such cue points and allowed for

modifications to be made to content that had already been published and distributed. This was a dramatic improvement over prior art systems at the time, all of which required cue point management to be performed locally using a local client application and thus were not capable of interacting with, let alone modifying cue point information associated with video content that had already been released. As WellcomeMat thus explained, "[n]one of the cited art, alone or in combination, apparently teaches or suggests ***remote editing of and interaction with cue points associated with a video file over a public client-server architecture***." Ex. 1010 ('286 Patent File History), 111. Petitioner identifies nothing to alter this conclusion. Instead, as explained below, all of the references it cites in its Petition likewise are limited to disclosing the same local cue point management systems that the '286 Patent was specifically intended to improve over. For that reason alone, the Petition thus fails and the Board can and should decline to institute.

Second, the Board also can and should decline to institute this IPR under Section 314(a) pursuant to *Fintiv* because institution would result in the investment of significant resources in a duplicative proceeding with the EDTX litigation involving WellcomeMat and Aylo, which is set for trial months before the expected date for a final written decision here. *Fintiv* Factors 1-5 strongly favor denial of institution. That being the case, pursuant to the Director's June 2022 Guidance Memo and the precedential *CommScope Technologies LLC v. Dali Wireless, Inc.*

(IPR2022-01242) decision, there can be institution only if Aylo has submitted a *Sotera* stipulation, or if Aylo has presented grounds that meet the significantly elevated compelling merits standard. Aylo has done neither, and thus institution should be denied.

II. BACKGROUND

A. Procedural History

WellcomeMat asserted the ’286 Patent against Aylo in *WellcomeMat, LLC. v. Aylo Holdings, S.à r.l., et al.*, Case No. 23-cv-483 (E.D. Tex.), which was filed on October 13, 2023. That matter is set for trial on July 7, 2025.

This Petition was filed on March 29, 2024.

B. The ’286 Patent

1. The Invention

U.S. Pat. No. 8,307,286 (“the ’286 Patent”) is directed to a system and method for providing video content supplemented with cue point information, which is associated with video data, including video files. ’286 Patent, 2:51-3:1. Such cue point information is typically indexed to a time or location in video data and may include the index information, as well as other information such as metadata describing the cue point (e.g., the title of the cue point, the author of the cue point, etc.). ’286 Patent, 2:22-24, 7:49-8:1, 8:25-34. The cue point information may also include cue point content in the form of textual comments describing or explaining

the associated video. Cue point information could be audio or video describing or explaining the associated video. Cue points can be selected by a user to navigate to a portion of the associated video. ’286 Patent, 15:18-21.

Of course, the ’286 Patent did not simply claim the ability to provide video content supplemented with such cue point information. Instead, it claimed specific methods (and systems) for doing so that improved over prior art systems by, at a minimum, enabling “remote editing of and/or interaction with cue points associated with a video file over a public client-server architecture.” Ex. 1010 (’286 Patent File History), 112. In contrast, prior art techniques and systems permitted only local cue point handling at a client terminal. *Id*. To enable this improved remote cue point management functionality, which greatly improved the ability of video content providers to interact with and modify video data, the ’286 Patent thus required a novel server architecture that enabled remote cue point management.

For example, as illustrated in Figure 1A (duplicated below), one embodiment of the cue point processing system includes an application server 110 that interfaces with a video server 112 containing video data and a cue point server 112 that contains sets of cue point information corresponding to one or more of such video. ’286 Patent, Fig. 1A. The application server 110, video server 112, and cue point server 114 all are server-side systems interfacing over a public network with client terminals such as viewer terminals 132 or editor terminals 134.

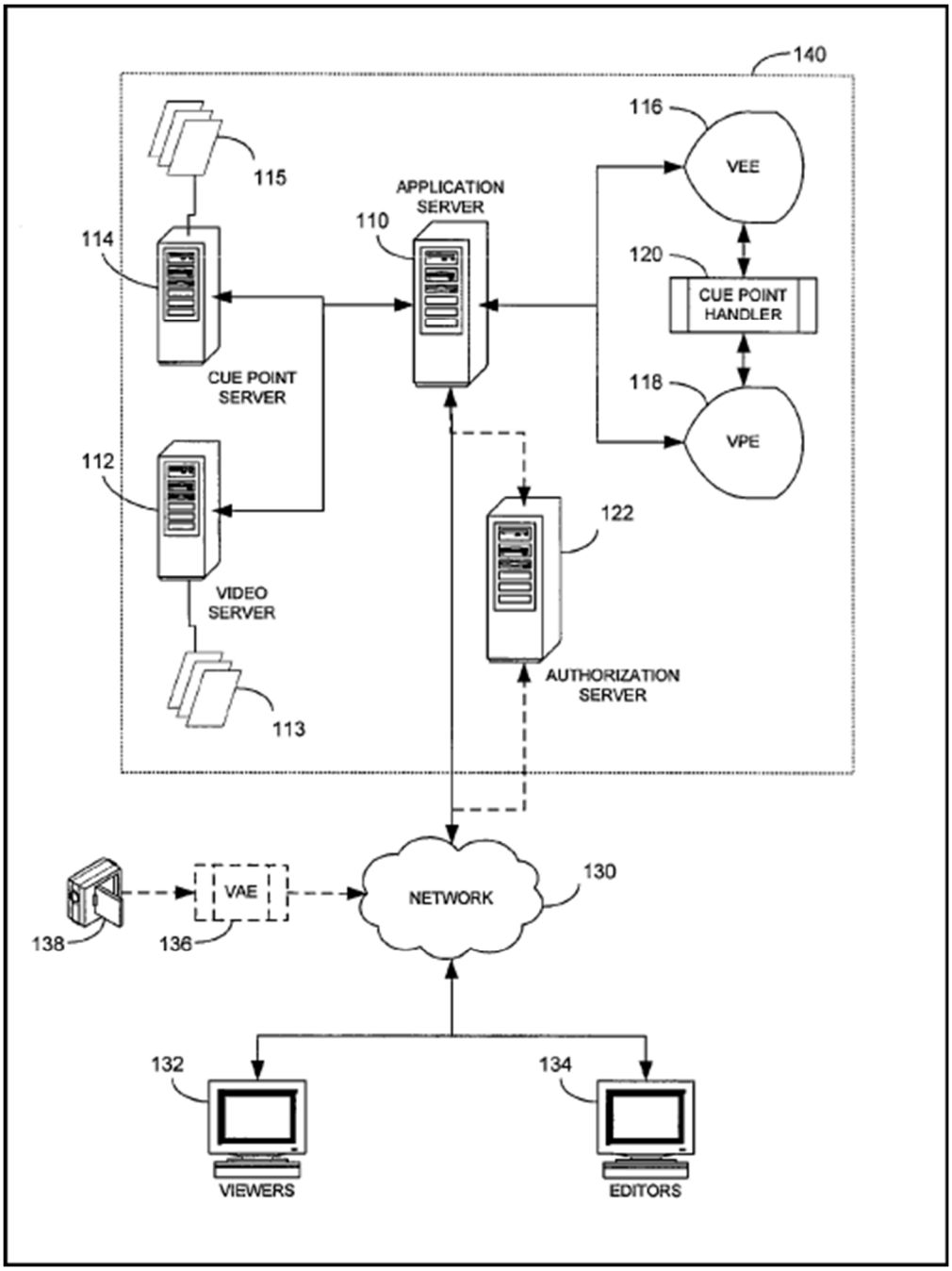

The application server runs specialized server-side programs, including a Video Editing Environment (VEE) program 116 and a Video Playback Environment (VPE) program 118. *Id.* 4:57-49, 6:62-66, 9:19-25, Fig. 1A. The VEE is an application executed by the application server to permit client devices (editor

terminals) to remotely edit sets of cue point information associated with video data. ’286 Patent, 12:65-67 (“loading a video editing environment (VEE) 310 … executing an application”), 13:2-6 (“the VEE may be loaded as a … server-level application”), Figs. 3A-3C. “[T]he cue point information form may be displayed on a client terminal while the cue point editor resides on a server terminal.” ’286 Patent, 23:18-20.

The Video Editing Environment (VEE) program permits cue points to be created and edited for selected video information. ’286 Patent, 13:39-16:58, 18:55-57 (“add or edit the cue point information associated with the video file”), 19:28-30 (“cue point editing types … include … adding, modifying, or deleting cue point information”), Figs. 3A, 3C. The VEE may permit transition to a cue point editor program. ’286 Patent, 3:33-61, 15:33-41 (“If the cue point edit mode has not been entered …”), 18:45-46 (“the client may select a GUI control dedicated to providing entry into the cue point edit mode”), 19:7-8 (“The method 370 begins by loading a cue point editor 372”), Figs. 3A-3C. According to an embodiment, the cue point editor permits sets of cue points (multiple cue points) for video to be edited as a group. ’286 Patent, 15:61-16:4, 16:42-45 (“the client may be able to edit multiple cue points at once.”), Figs. 3A-3B. After video information and a set of cue points is loaded, “cue point information can be entered for new cue points or for modifying existing cue points.” ’286 Patent, 16:5-6, Figs. 3A-3B.

Figure 6 depicts an exemplary client user interface for accessing the server-side Video Editing Environment (VEE) program so that the client-side user can view video, display existing cue points for that video, navigate within the video using the cue points, insert new cue points in the video, and modify existing cue points for the video. ’286 Patent, 25:64-28:60, Fig. 6.

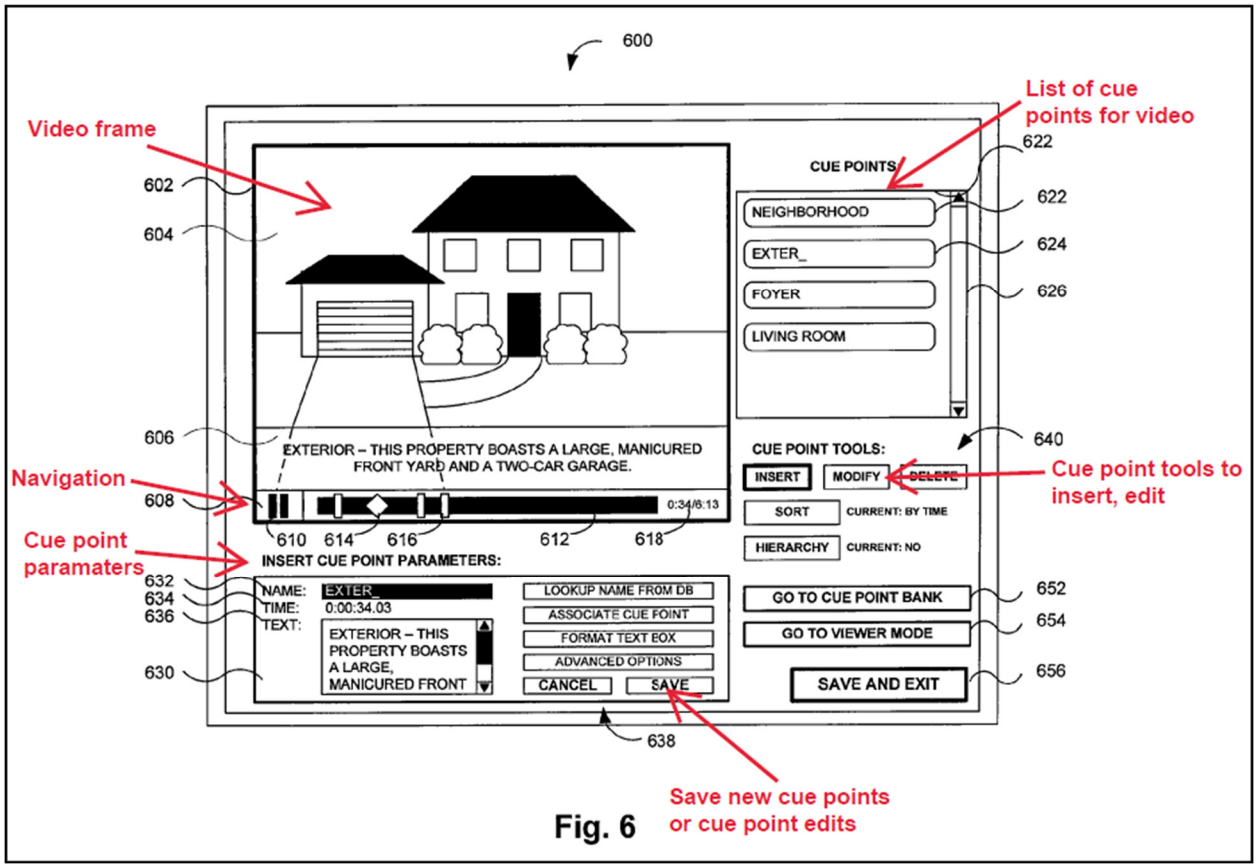

Fig. 6

’286 Patent, Fig. 6 (annotated in red).

2. Prosecution History

The application leading to the ’286 Patent was filed on May 4, 2007, and asserts priority to a provisional application filed on May 7, 2006. Ex. 1001 (’286 Patent) (Cover, 60).

The application for the ’286 Patent was subjected to a rigorous examination, receiving three office actions before the claims were allowed. As noted above, during the course of examination, the inventor repeatedly emphasized that the claimed invention improved over the prior art by requiring a decentralized architecture with a *video editing environment* as a **server-side program** that allows the client terminal to remotely edit cue points over a public network, thus providing for **remote cue point editing** by the client as opposed to exclusively **local cue point editing** using a local client application. See Ex. 1010 (’286 Patent File History), 111-113. For example, as the inventors explained (all emph. added):

- “None of the cited art, alone or in combination, apparently teaches or suggests **remote editing** of and interaction with cue points associated with a video file over a public client-server architecture.” Ex. 1010 (’286 Patent File History), 111.
- “Accordingly, even if, arguendo, Shibata could be construed as teaching the cue point handling functionality recited in the claims, it would apparently only teach **local cue point handling …** at the client

terminal performing the editing. This is different from **remote editing** of and/or interaction with cue points associated with a video file over a public client-server architecture." Ex. 1010 ('286 Patent File History), 112.

- "In particular, both [prior art] implementations clearly describe **local editing functionality**, and only appear to use the network for distribution of content. … The combination would still seem to fail to teach or suggest the type of **remote cue point handling** recited in the claims." Ex. 1010 ('286 Patent File History), 113.
- "[T]he seller can … create and modify those cue points **remotely**, via a remote video [editing] environment **running on an application server** …" *Id.*, 112.
- "This [prior art] is different from [the claimed] remote editing of … cue points associated with a video file over a public client-server architecture." *Id.*, 112.

The '286 Patent issued on November 6, 2012.

III. CLAIM CONSTRUCTION

In the underlying district court proceedings, Patent Owner submitted two preliminary claim constructions arguments in response to a motion to dismiss arguments made by Aylo. Notably, however, those constructions are not necessary

to evaluate (and reject) Aylo's Petition here. Accordingly, for purposes of this Preliminary Response only, Patent Owner interprets all claim terms in accordance with their plain and ordinary meaning. The Patent Owner reserves the right to propose constructions and other arguments in this IPR, the EDTX litigation, or any other proceeding.

As discussed in the analysis of the references on their merits, there are instances where the Petitioner has interpreted and applied the claim language in a manner that departs from its plain and ordinary meaning in the context of the claim and specification. Patent Owner addresses those issues in the analysis of the claims set forth *infra.*

IV. PERSON OF ORDINARY SKILL IN THE ART

The Petitioner submits that a person of ordinary skill in the art ("POSITA") would have had a bachelor's degree in electrical engineering, computer engineering, or computer science (or equivalent) plus approximately two years of work experience with technologies relating to video annotation/bookmarking and/or video navigation. Pet., 10.

Patent Owner submits that the Petitioner's definition is incorrect. First, it is too narrow in defining the field as video annotation/bookmarking, which is not even discussed in the background of the invention section of the '286 Patent. See '286 Patent, 1:20-2:44. Second, it is too broad insofar "video navigation" is a vague term

that could encompass the mere playback of video in any form (e.g., analog, digital) and using any medium (e.g., a circa-1970's cassette player or 8-track tape player).

The definition of the level of skill of the ordinary artisan should consider factors such as the field of endeavor, the type of problems encountered in the art, prior art solutions, and sophistication of the technology. *In re GPAC, Inc.*, 57 F.3d 1573, 1579 (Fed. Cir. 1995). As described in the background of the invention, the field of endeavor is the production (including the creation and modification) of video for online distribution. '286 Patent, 1:20-2:44.

The Patent Owner submits that a person of ordinary skill in the art ("POSITA") would have had a bachelor's degree in electrical engineering, computer engineering, or computer science (or equivalent) plus approximately two years of work experience with producing digital video for online distribution. Lack of work experience could be mitigated by additional education, and vice versa.

The Patent Owner submits that institution should be denied regardless of which POSITA definition is adopted.

V. RELEVANT LEGAL STANDARDS

A. Anticipation

Anticipation is an exacting standard: "a claim is anticipated if each and every limitation is found either expressly or inherently in a single prior art reference." *King Pharm., Inc. v. Eon Labs, Inc.*, 616 F.3d 1267, 1274 (Fed. Cir. 2010) (quotations

omitted). "But disclosure of each element is not quite enough—this court has long held that '[a]nticipation requires the presence in a single prior art disclosure of all elements of a claimed invention *arranged as in the claim.*'" *Net MoneyIn v. Verisign*, 545 F.3d 1359, 1371 (Fed. Cir. 2008) (cited omitted) (orig. italics). In other words, the reference must disclose the invention exactly as it is claimed.

B. Obviousness

The objective standard for determining obviousness under 35 U.S.C. § 103, as set forth in *Graham v. John Deere Co.*, 383 U.S. 1 (1966), requires a factual determination to ascertain: (1) the scope and content of the prior art; (2) the level of ordinary skill in the art; and (3) the differences between the claimed subject matter and the prior art. Based on these factual inquiries, it must then be determined, as a matter of law (4) whether or not the claimed subject matter as a whole would have been obvious to one of ordinary skill in the art at the time the alleged invention was made. *Id*. at 17. If appropriate, secondary considerations of nonobviousness, sometimes called "objective indicia", should be considered, such as commercial success, long-felt but unsolved need, failure of others, unexpected results, copying, and so forth. *Id.* at 17.

A finding of obviousness requires a showing that as of the date of the invention (a) the prior art teaches or suggests each of the limitations of the claim; (b) there exists an apparent reason to combine and/or modify the prior art as proposed;

and (c) a person of ordinary skill would have a reasonable expectation of success that the proposed combination and/or modification of the prior art would operate for its intended purpose. See *KSR Int'l Co. v. Teleflex Inc*., 127 S.Ct. 1727, 1741 (2007); *Pfizer, Inc. v. Apotex, Inc*., 480 F.3d 1348, 1361 (Fed. Cir. 2007); *Regents of Univ. of California v. Broad Institute, Inc*., 903 F.3d 1286, 1291 (Fed. Cir. 2018).

VI. THE CHALLENGED CLAIMS ARE NOT UNPATENTABLE AS ANTICIPATED UNDER § 102 BY GUPTA (GROUND 1)

The Petition fails to show that the claims are obvious over the references because each combination of Grounds 1-5 fails to teach or suggest one or more limitations of the challenged claims.

A. Claim 13 is patentable because Gupta fails to disclose *providing a computer system … comprising a video editing environment, and being disposed at a server side of a public network* (Limitation 13.1)

Consistent with the remote cue point management focus of the '286 Patent, Limitation 13.1 requires *providing a computer system … comprising a video editing environment, and being disposed at a server side of a public network*. Gupta does not disclose such a system.

As set forth in Limitation 13.1 (and described in the '286 Patent specification), the challenged claim requires a *video editing environment* that is a server-side application that runs on the server-side of a public network and thus enables the remote cue point editing by a client terminal to which the patent is directed. '286

Patent, Fig. 1A (Video Editing Environment Program, VEE 116), Fig. 4A (client terminal interfacing with server-side Video Editing Environment 440), 2:60-61 ("The video environment is configured to be runnable by the application server"), 4:57-49, 6:62-66, 9:19-25, 12:65-67 ("loading a video editing environment (VEE) 310 … executing an application"), 13:2-6 (the VEE "as a … server-level application"), 23:18-20 ("For example, the cue point information form may be displayed on a client terminal while the cue point editor resides on a server terminal.").

Further, this understanding of the plain meaning of the claim language is confirmed not just by the express requirement of Limitation 13.1, which requires *a computer system … "comprising a video editing environment … disposed at a server side of a public network*," but other limitations as well. For example, Limitations 13.2 and 13.3 respectively recite *receiving a set of video information at the [server-side] video editing environment* and *receiving a set of cue point information at the [server-side] video editing environment.* Limitation 13.4 recites *receiving a cue point editing command over the network from a remote client terminal.* Limitation 13.5 recites *modifying a portion of the cue point information at the server side of the public network according to the cue point editing command … received over the public network from the client terminal.*

In short, as a whole, the claim recites a method using a decentralized remote architecture for editing cue points using a server-side *video editing environment* application on a public network that enables **remote editing** of the cue point information by a client-side terminal, as opposed to exclusively **local editing** of cue point information by the client terminal. '286 Patent, 2:17-25.

As noted above, the inventors confirmed this critical requirement during prosecution—repeatedly explaining that the invention required a decentralized remote server architecture with a *video editing environment* as a server-side program (or combination of programs) that allows the client terminal to remotely edit cue points over a public network, thus providing for **remote cue point editing** by the client. For example, as they explained in differentiating various prior art systems that, like Gupta, contemplated only the ability to manage cue points locally (all emph. added below):

- "None of the cited art, alone or in combination, apparently teaches or suggests **remote editing** of and interaction with cue points associated with a video file over a public client-server architecture." Ex. 1010 ('286 Patent File History), 111.
- "Accordingly, even if, arguendo, Shibata could be construed as teaching the cue point handling functionality recited in the claims, it would apparently only teach **local cue point handling …** at the client

terminal performing the editing. This is different from **remote editing** of and/or interaction with cue points associated with a video file over a public client-server architecture." Ex. 1010 ('286 Patent File History), 112.

- "In particular, both [prior art] implementations clearly describe **local editing functionality**, and only appear to use the network for distribution of content. … The combination would still seem to fail to teach or suggest the type of **remote cue point handling** recited in the claims." Ex. 1010 ('286 Patent File History), 113.
- "[T]he seller can … create and modify those cue points **remotely**, via a remote video [editing] environment **running on an application server** …." *Id.*, 112.
- "This [prior art] is different from [the claimed] remote editing of … cue points associated with a video file over a public client-server architecture." *Id.*, 112.

These consistent statements during prosecution further confirm the use of a server-side video editing environment providing for remote cue point editing by the client as recited by the express claim language itself. *See Phillips v. AWH Corp.*, 415 F.3d 1303, 1317 (Fed. Cir. 2005) (en banc); *Personalized Media Communications,*

LLC v. Apple Inc., 952 F3d 1336, 1340 (Fed. Cir. 2020) (consistent description of the invention during prosecution confirms the understanding of the claim language).

Gupta does not meet this requirement because Gupta does not disclose or even suggest a server-side *video editing environment* program that enables the remote editing of cue points by a client device, as required by Limitation 13.1. Rather, to the extent that Gupta discloses a *video editing environment* at all, it does so on the client-side at client 15 of Gupta.

Specifically, Gupta discloses that "bookmark" editing is conducted by the user interface module (UIM) 152, which Gupta explains "is an application program … executed at client 15." Ex. 1004 (Gupta), [0082], Fig. 3. As Gupta explains, this user interface module 152 cooperates with the annotation backend module 151 (which is also executed on client 15 (see ABE 151, Fig. 3)) to generate the graphical user interfaces (GUIs), including the "dialog boxes" for viewing, adding, and editing annotations as depicted in Figures 6-23. Gupta, [0081], Figs. 6-23.

Thus, Gupta at best discloses local editing of bookmarks using the client-side UIM program. See Gupta, Fig. 3 (UIM module in client 15). There is no disclosure of a server-side *video editing environment* program executing on Gupta's annotation server 10 to meet Limitation 13.1 and provide for remote cute point editing as claimed. See Gupta, Figs. 1, 3 (annotation server 10).

The Petitioner does not demonstrate otherwise. The Petitioner generally refers to the annotation server 10 of Gupta but makes no showing that annotation server 10 is executing a *video editing environment* program as claimed. See Pet., 15-17. Indeed, Gupta does not disclose that any particular program is running on the annotation server (see Gupta, Fig. 1, annotation server 10), let alone a *video editing environment* program as claimed—a point that the Petitioner concedes when it later describes the video editing environment of Gupta as "the **client-side** editing functionality disclosed by Gupta." See Pet., 72 (emph. added).

The Petitioner refers to other miscellaneous passages from Gupta. But none demonstrates this claim limitation. For example, the Petitioner points to the annotation backend (ABE) module 132 in the annotation server "which contains functionality for accessing stores 17 and 18." Pet., 16. But this merely means that the annotation server can access the two databases 17 and 18. It does not disclose that the annotation server is executing a *video editing environment* program enabling remote cue point editing by a client device. Paragraph [0144] (cited in Pet., 16-17) refers to the "edit annotation" GUI of Figure 21, which is a **client-side** dialog box generated by the **client-side** user interface module software executing on client 15. Gupta, [0081], Fig. 3, Fig. 21. Accordingly, the Figure 21 GUI in Gupta does not remotely teach or suggest the claimed server-side *video editing environment.*

The Petition (at 17) also refers to Gupta's description that the "annotation backend 151 [] [in client 15] sends the new annotation information to annotation server 10." See Gupta, [0100]. But this reference to sending information to the annotation server also does not disclose that annotation server 10 is executing a server-side *video editing environment* program providing for remote cue point editing, as required by the claim. This is confirmed by the follow-on statement in paragraph [0100], which states that the **client-side** "[user] interface 152 then closes [the] dialog box, the new annotation being entered." Gupta, [0100]. In short, every reference in Gupta to the entry of an annotation (bookmark) contemplates that such operation occurs exclusively within a client-side application program, not a server-side *video editing environment* program that enables remote editing as required by the challenged claim.

Additionally, the Petitioner makes no inherency argument for this limitation and thus has waived any such argument. Moreover, such an argument would fail in any event because there is nothing in Gupta indicating that it is inherent that the annotation server runs the claimed *video editing environment* program. On the contrary, as discussed above, Gupta discloses that any such editing program would run on the client device.

In sum, Claim 13 is not unpatentable as anticipated by Gupta because Gupta fails to disclose the claimed server-side *video editing environment* program enabling remote cue point editing by a client device over a public network.

B. Claim 13 is patentable because Gupta fails to disclose *receiving a set of video information at the video editing environment using the computer system* (Limitation 13.2)

Gupta also does not anticipate Claim 13 because it does not disclose *receiving a set of video information* <u>*at the video editing environment*</u> [at the server-side] *using the computer system* as required by Limitation 13.2.

Indeed, the only editing mode Gupta discloses is the one running on client 15 when the client-side user interface module is being used to generate the "view annotations" dialog box of Figure 15 from which a specific annotation can be selected for editing in the "edit annotation" dialog box of Figure 21. Gupta, Fig. 15, Fig. 21, [0124], [0128], [0144]. And neither of these client-side dialog boxes in Figures 15 and 21—which the Petition identifies as the *video editing environment*—disclose *receiving a set of video information at the video editing environment* for purposes of editing the associated cue point information, pursuant to Limitation 13.2 because neither Figure 15 or Figure 21 of Gupta discloses or suggests receiving video information. Further, Limitation 13.2 requires that video information is being received at the **server-side** *video editing environment*, which plainly is not taking place in Gupta, which has no server-side video editing mode.

The Petitioner refers to "streaming media content [] received … by streaming media server 11." Pet., 18. But the receipt of streaming media content at the media server 11 does not relate in any way to the alleged *video editing environment* of Figures 15 and 21. The Petitioner also refers to the "concurrent display" of Figure 23, which provides for the concurrent display of annotations and multimedia content. Pet., 19. See Gupta, Fig. 23, [0153]. However, the "concurrent display" does not provide for editing annotation information, and does not relate in any way to the alleged *video editing environment* of Figures 15 and 21.

In sum, Limitation 13.2 requires that the *set of video information* is received *at the video editing environment.* The Petitioner alleges that the *video editing environment* is the dialog boxes of Figures 15 and 21. But there is no disclosure in Gupta that the dialog boxes of Figures 15 and 21 receive video information. Further, even if either Figure did disclose that (and neither does), it would still fail to meet the claim limitation because it requires that the *set of video information* is received at a **server-side** *video editing environment*. And as explained, Gupta does not disclose a **server-side** video editing environment. For these reasons, Limitation 13.2 is not disclosed in Gupta. *Net MoneyIn*, 545 F.3d at 1371 (the reference does not anticipate because it fails to disclose "all of the limitations arranged or combined in the same way as recited in the claim.")

C. Claims 14-15 and 18-20 Are Patentable

Dependent Claims 14-15 and 18-20 are not unpatentable for at least the reasons set forth above for independent Claim 13.

D. Dependent Claim 15 also is patentable because Gupta fails to disclose *receiving an edit mode entry signal over the network from the client terminal representing entry into the cue point edit mode, and switching the video editing environment to the cue point editing mode in response to receiving the edit mode entry signal*

The specification of the ’286 Patent discloses that the system receives signaling to transition from the *video editing environment* to the *cue point editing mode*. ’286 Patent, Figs. 3A-3C, 3:33-61, 15:33-41 (“If the cue point edit mode has not been entered …”), 18:45-46 (“the client may select a GUI control dedicated to providing entry into the cue point edit mode”), 19:7-8 (“The method 370 begins by loading a cue point editor 372”), Figs. 3A-3C. See Ex. 1010 (’286 Patent File History), 329 (originally presented Claim 16). Consistent with this disclosure, Claim 15 thus requires that two separate commands are transmitted from the client terminal over the public network to the server-side *video editing environment* application to control editing operations:

- *receiving a cue point editing command over the network from a remote client terminal … [and] … modifying a portion of the cue point information at the server side* [] *according to the cue point editing command* (Limitations 13.4-13.5).

- *receiving an edit mode entry signal over the network from the client terminal … and switching the video editing environment to the cue point editing mode in response to receiving the edit mode entry signal* (Claim 15).

The Petitioner fails to establish that Gupta discloses that its client device transmits two separate cue point commands over the network to control cue point editing at the server-side.

For the *cue point editing command* of limitations 13.4-13.5, the Petitioner vaguely refers to Gupta's "OK" button, which the user can select in the "edit annotations" dialog box of Figure 21. Pet., 21-23. But Petitioner identifies nothing in Gupta showing (and there is nothing in Gupta to show) that selecting Gupta's "OK" button causes any command, let alone a *cue point editing command*, to be transmitted over the network to carry out server-side cue point editing operations.

Similarly, for the *edit mode entry signal* of Claim 15, the Petition refers to the "edit" option in the dialog box of Figure 15. Pet., 30. Again, however, Gupta does not disclose or suggest that a user selecting the "edit" option causes an *edit mode entry signal* to be transmitted from the client device over the network from the client to the server, as claimed. Instead, it states that selection of the "edit" option results in the local display on the client device of the "edit annotations" dialog box of Figure 21. Gupta, Fig. 15, Fig. 21, [0127], [0128] ("Selection of the 'edit' feature causes interface module 152 to display another dialog box allowing the user to edit the

content of the annotation"), [0144]. Thus, Gupta does not disclose, expressly or inherently, that the user selecting the "edit" button of Figure 15 causes a signal to be transmitted from the client device over a public network to the server, let alone an *edit mode entry signal* as specifically claimed.

That is not all. As recited in Claim 13, the claimed *edit mode entry signal* causes a transition to a *cue point edit mode*, which is another program (or section of a program) executing on the server-side *within the video editing environment*. Yet for the claimed *cue point edit mode*, the Petitioner refers to the "edit annotations" dialog box of Figure 21 (Pet., 30), which is a GUI generated by **client-side** software on client 15. Gupta, [0082], Fig. 3. Gupta makes this clear. As it states: "The interface module 152 is an application program … executed at client 15." *Id.*, [0082]. Accordingly, the "edit annotation" dialog box of Figure 21 is not the claimed *cue point editing mode* because it is client-side, not server-side as claimed.

For the reasons set forth above, Gupta does not anticipate Claim 15.

VII. THE CHALLENGED CLAIMS ARE NOT UNPATENTABLE AS ANTICIPATED UNDER § 102 BY FEGAN (GROUND 2)

A. Claim 13 is patentable because Fegan fails to disclose *providing a computer system … comprising a video editing environment, and being disposed at a server side of a public network* (Limitation 13.1)

As discussed, *supra*, in Section VI.A, the inventors repeatedly emphasized during the prosecution of the '286 Patent that the *video editing environment* is a

server-side program that allows the client terminal to remotely manage cue points over a public network, thus providing for **remote cue point editing** as opposed to **local cue point editing** using a local application. As also noted, Limitation 13.1 expresses this requirement—requiring *providing a computer system … comprising a video editing environment, and being disposed at a server side of a public network*. This limitation is not disclosed by Fegan.

Like Gupta, Fegan discloses a system that allows a user to create "segments" (bookmarks) by defining start/end points in a selected multimedia file. The segments can include annotations such as comments. See Fegan, Figs. 3-4 (an audio file is selected, and a segment named "flint sit down strike" is defined and annotated). The Petitioner points to such "segments" as disclosing cue point information and further points to the utilities for editing them as the *video editing environment … disposed at a server side of a public network*. But Fegan does not support such an interpretation.

Fegan makes a vague high-level introductory statement that preferably "the systems and methods are hosted in an entirely server-side environment." Fegan, [0008]. Yet, when it comes to editing segments, all of Fegan's disclosed embodiments carry out segment editing operations **locally** through only **client-side** software. Fegan does not disclose a server-side application for performing editing of segments under the control of commands sent by a client device. Applying the

language of the claim, the editing of segments in Fegan is not remote cue point editing using a *video editing environment* program *disposed at a server side of a public network*.

For example, Figures 3-4 of Fegan depict browser windows generated by a client-side browser app. Figure 3 depicts a list of audio files presented on the client browser:

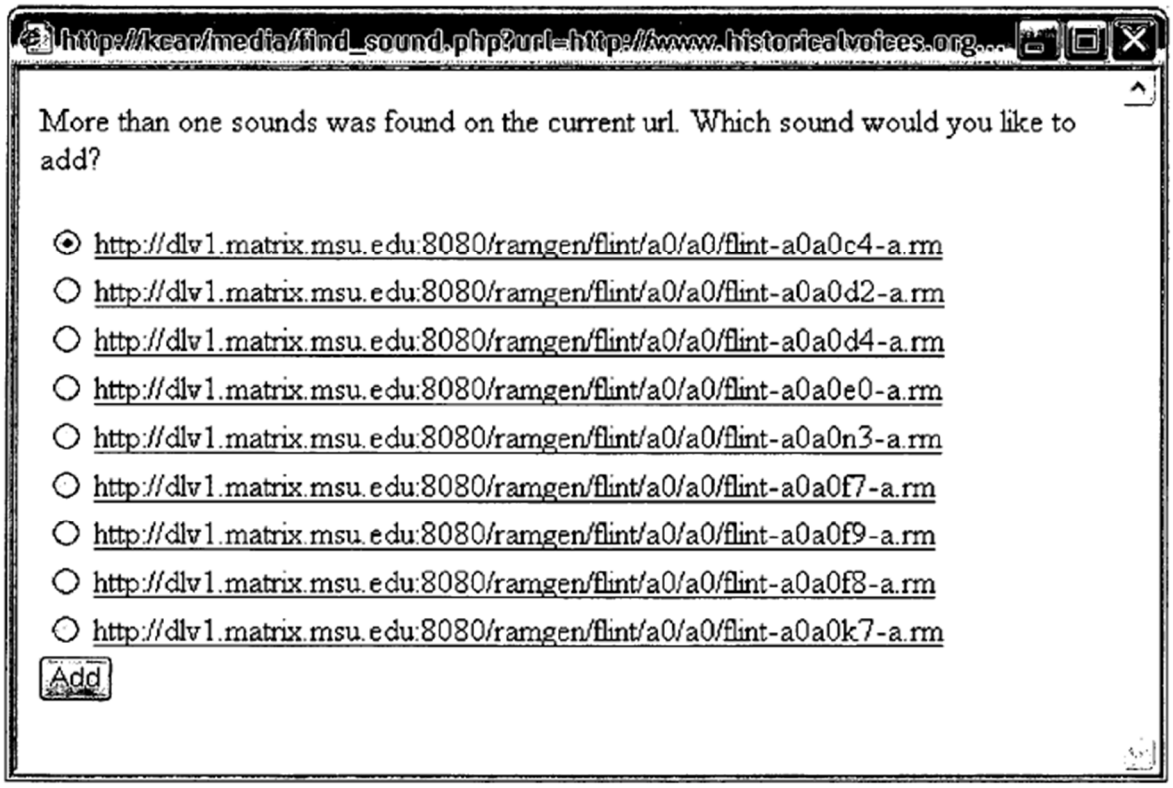

Fegan, Fig. 3, [0073]-[0076].

If a user selects an audio file on Figure 3, the file is loaded into the client-side multimedia player using a client-side **"editor"** to create a segment and/or edit annotative information, as shown in Figure 4:

FIGURE 4

The system will load the sound into the editor and allow you to create a segment by pressing start and end recording and then adding a title, annotation, and dictating what folder this annotation should go in on your portal page.

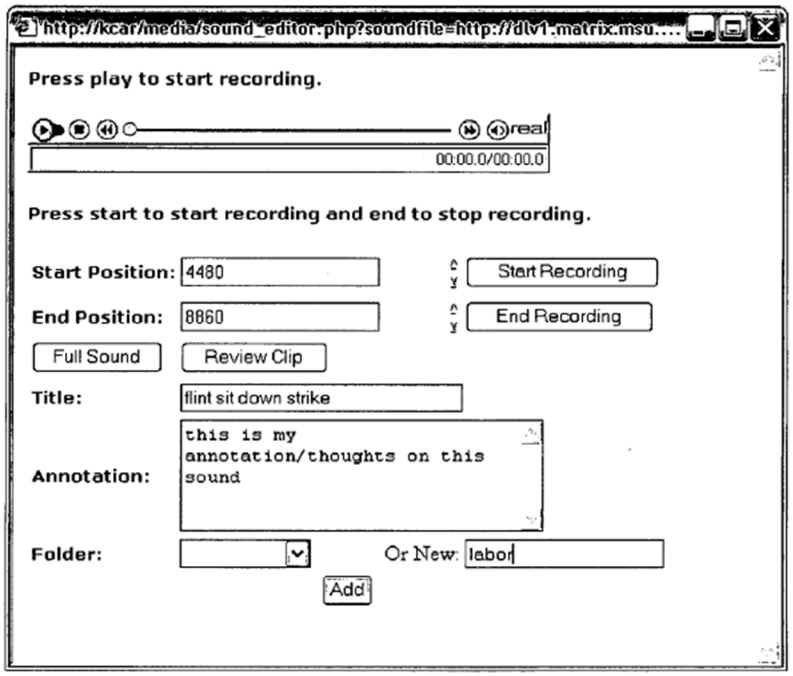

Fegan, Fig. 4; [0076] ("The selected multimedia file and compatible multimedia player are then displayed in a browser window."), [0078] ("the browser window contains additional tools for segmenting multimedia files."), [0080] (locally created annotative information using the Figure 4 browser window). The "editor" of Figure 4 is a client-side application in the browser window. See Fegan, Fig. 4.

Fegan discloses that, after a segment or annotation has been **locally created** at the client using the "editor" in the client browser, the segment can be uploaded to a remote server. Fegan states: "The data associated with the time-based index points may be saved and stored on a remote server, and may be retrieved from the

remote server and used whenever the associated multimedia file is accessed." Fegan, [0078], [0080], [0083] (software at remote server allows a user to "**save and store** segments and annotative information"). Thus, Fegan's remote server can be used for storage/retrieval of segments, not for editing segments. Nowhere does Fegan describe a server-side application for performing remote editing of segments under the control of a remote client.

Like Gupta, Fegan thus discloses **local editing** of segments using **client-side** software (browser, editor, multimedia player) and not **remote editing** using a **server-side** *video editing environment* program as required by the claim.

The Petitioner cites nothing to the contrary. For example, Petitioner refers to paragraph [0071] of Fegan, but that simply states that the functionality of a client browser for **searching** multimedia content can be "extended by means of one or more separate computer programs … that are stored on one or more remote locations." See Fegan, [0071] (all emph. added) ("separate computer programs [at] remote locations … for **locating** multimedia content … adding multimedia content **search functionality** … Software … that is stored on the remote server allows any location on a computer network to be automatically **searched** for multimedia content …"). Thus, paragraph [0071] merely discloses that remote software can be used to assist in **searching** for multimedia content. It does not remotely disclose or even relate to software used for **editing** segments (alleged *cue point information*)

for multimedia content using a server-side *video editing environment*, as per Limitation 13.1.

Petitioner also cites to Fegan's disclosures at [0073] that "the **search results** may be **stored** by software on a remote server" and [0083] that "software that is stored on a remote server allows a user to **save and store** segment and annotative information." Pet., 34-35 (emph. added). Similar to the discussion in the paragraph immediately above, these passages merely relate to software for **saving** segments at a server; they do not relate to software stored on a remote server that performs **editing** of segments, let alone that enables remote editing by a client device as claimed. As discussed above for the "editor" of Figure 4, the editing of segments is local editing carried out by client-side applications. The passages cited by Petitioner simply do not pertain to the claimed server-side *video editing environment* program per Limitation 13.1.

Petitioner also cites to server-side database software such as MYSQL. Pet., 34 (citing Fegan, [0010]). As described, and as would be well understood by a POSITA, such database software maintains information in a database, i.e., provides for its storage and retrieval. Ex. 2012 (What is MYSQL?), 1-2. Fegan does not disclose that the MYSQL database software provides functionality for the client to remotely edit segments, as is required by the server-side *video editing environment* program of Limitation 13.1.

Additionally, the Petitioner does not argue inherency and therefore waives any argument that Fegan inherently discloses the server-side *video editing environment* program. Further, even absent waiver, as explained above, it does not follow from Fegan that the segment editing program is operating server-side. *See Rosco, Inc. v. Mirror Lite Co.*, 304 F.3d 1373, 1380 (Fed. Cir. 2002) (doctrine of inherency requires that "the missing element 'is necessarily present in the thing described in the reference, and that it would be so recognized by persons of ordinary skill.'"); *Continental Can Co. v. Monsanto Co.*, 948 F.2d 1264, 1268-1269 (Fed. Cir. 1991) (when a claim limitation is not explicitly set forth in a reference, evidence "must make clear that the missing descriptive matter is necessarily present in the thing described in the reference . . ."); *In re Robertson*, 169 F.3d 743, 745 (Fed. Cir. 1999) (that a feature in the prior art reference "could" operate as claimed does not establish inherency).

Claim 13 is not unpatentable as anticipated by Fegan at least because Fegan fails to disclose Limitation 13.1.

B. Claims 14-15 and 18-20 Are Patentable

Dependent Claims 14-15 and 18-20 are not unpatentable for at least the reasons set forth above for independent Claim 13.

C. Dependent Claim 15 also is patentable because Fegan also fails to disclose *receiving an edit mode entry signal over the network from the client terminal representing entry into the cue point edit mode, and switching the video editing environment to the cue point editing mode in response to receiving the edit mode entry signal*

As discussed above for Gupta, the specification of the '286 Patent discloses that the server-side receives a signal over the network from the client terminal to transition from the server-side *video editing environment* to the *cue point edit mode*. Fegan does not disclose a server-side *receiving an edit mode entry signal over the network from a client terminal … and switching the video editing environment to the cue point editing mode in response.*

For this limitation, the Petitioner refers to the "Edit" icon in Figures 5-6 of Fegan, which opens the GUI for editing an annotation depicted in Figure 7. See Pet, 50; Fegan, Fig. 7 ("by clicking the edit button, a user can edit any of the information for that annotation"). But Fegan does not disclose or suggest that selecting the edit button causes the client to send to the server-side *an edit mode entry signal over the network from the client terminal* as the limitation requires. Rather, Fegan discloses only that the edit button (Fig. 5) opens another client-side GUI (Fig. 7), which does not disclose or suggest that the client transmits an *edit mode entry signal* over the network to the server-side as Claim 15 requires.

Further, the Petitioner makes no argument of inherency and thus waives such argument.

For these reasons, too, Claim 15 is not unpatentable as anticipated by Fegan.

VIII. THE CHALLENGED CLAIMS ARE NOT UNPATENTABLE AS OBVIOUS UNDER § 103 BY KIM (GROUND 3)

A. Claim 13 is patentable because Kim fails to disclose or suggest *providing a computer system … comprising a video editing environment, and being disposed at a server side of a public network* (Limitation 13.1)

As discussed, *supra*, in Section VI.A, during prosecution the inventor repeatedly confirmed that, as multiple claim limitations state, the *video editing environment* is a server-side program that allows the client terminal to remotely edit cue points over a public network, thus providing for **remote cue point editing** as opposed to **local cue point editing** using a local application. Limitation 13.1 emphasizes this requirement, reciting *providing a computer system … comprising a video editing environment, and being disposed at a server side of a public network.* Like Gupta and Fegan, Kim does not teach or suggest this limitation.

Generally speaking, Kim discloses a system allowing clients to create multimedia bookmarks associated with corresponding multimedia content files. The locally-created bookmarks are locally-stored at the user's client device and, if the user elects, can be updated to a BBS server so that users can share bookmarks. Ex. 1006 (Kim), Abstract, Figs. 1-2. As is clear from the above, Kim discloses a **client-based** system for **local bookmark editing**—one where the creation and editing of bookmarks takes place at a local multimedia bookmark client 238 running on the

client device 230. Kim, Fig. 2 (MM bookmark client 238), Fig. 20A (MM bookmark client 2030), [0211] (VMark client), [0283] ("multimedia bookmark client 238 located in client 230"). As described in Kim, the bookmarks are created and edited locally using the multimedia bookmark client, and they are stored locally in client bookmark storage 236. Kim, Fig. 2 (multimedia bookmark storage 236), Fig. 20A (client storage 2032), [0288] ("The multimedia bookmark [is] saved at local storage 236 of client 230 regardless of whether … uploaded to multimedia bookmark BBS server 212").

Thus, Kim does not disclose or suggest the claimed server-side *video editing environment* program as claimed. Kim provides for local bookmark editing, not remote bookmark editing supported by a server-side *video editing environment* program as per Limitation 13.1. The Petition cites nothing to the contrary.

Instead, the Petition cites (at 55-57) various portions of Kim relating to locally-created bookmarks being uploaded (after creation) to the bookmark BBS server 212. But none of the cited passages disclose or suggest a server-side *video editing environment* program as claimed. For example, Paragraph [0288] describes the **locally-created** bookmark being "uploaded to multimedia bookmark BBS server 212." Kim, [0288]. Similarly, Paragraph [0286] describes that the locally-created image (thumbnail) for the bookmark may be obtained from the bookmark server 224

and then "delivered to multimedia bookmark client 238," which is locally-creating the bookmark.

In fact, the Petitioner ultimately admits that the bookmark editing of Kim is performed by client-side programs, stating that "multimedia bookmark [are] created locally at client 230," Pet., 57, and that "adding and managing bookmarks is the function of client 230" in Fig. 7, as part of "the client-side editing functionality of Kim," Pet., 61, 72.

Accordingly, Claim 13 is not rendered obvious because Kim fails to teach or suggest Limitation 13.1.

B. Claims 14-15 and 18-20 Are Patentable

Dependent Claims 14-15 and 18-20 are not unpatentable for at least the reasons set forth above for independent Claim 13.

C. Dependent Claim 15 also is patentable because both Kim and Sull fail to teach or suggest *receiving an edit mode entry signal over the network from the client terminal representing entry into the cue point edit mode, and switching the video editing environment to the cue point editing mode in response to receiving the edit mode entry signal*

As described above, Claim 15 requires that two separate commands are transmitted from the client terminal over the public network to the server-side *video editing environment* application to cause remote editing operations:

- *receiving a cue point editing command over the network from a remote client terminal … [and] … modifying a portion of the cue point information at the server side [] according to the cue point editing command* (Limitations 13.4-13.5).
- *receiving an edit mode entry signal over the network from the client terminal … and switching the video editing environment to the cue point editing mode in response to receiving the edit mode entry signal* (Claim 15).

Neither Kim nor Sull (allegedly incorporated by Kim) discloses or teaches the two separately recited commands required by Claim 15.

As for the *edit mode entry signal* of Claim 15, Petitioner alleges that clicking the "save" button 1822 in the GUI of Kim's Figure 18A is the claimed *edit mode entry signal* received over a network at the server from the client. Pet., 68. Not so. According to Kim, selecting the "save" button 1822 causes the "new GUI screen 1830 of FIG. 18B [to] appear" (Kim, [0334], Fig. 18A), which is a **local operation** performed at the client 230. Kim, [0334], Fig. 2 (MM bookmark client 238), Fig. 20A (MM bookmark client 2030), [0211] (VMark client), [0283] ("multimedia bookmark client 238 located in client 230"). Kim does not remotely teach or suggest that selecting the "save" button causes an editing signal (*edit mode entry signal*) to be sent from the client over the network to transition the server-side to a *cue point edit mode*.

The same is true of Sull's add-bookmark-title control button 922 which is not taught or suggested as being a command signal sent over the network from the client to the server. See Pet., 68. The Petition cites paragraphs [0205]-[0206], [0213], and Figure 14 of Sully. Pet., 68. These sections describe a client-side user interface having a "playback area 912 and a bookmark list 916." Sully, [00205], see Fig. 9. The bookmark list 916 has an "add-bookmark-title control button 922 [] used to input a title of bookmark given by a user" and "[i]f this button is not selected, a default title is used." *Id.*, [0206]. Figure 14 "is a flow chart illustrating the process of adding a title to a multimedia bookmark," *Id.*, [0213]. These passages in [0205]-[0206] and [0213] thus describe how a bookmark with selected title can be added to the bookmark list. They do not disclose anything regarding a command signal sent from the client to a server, let alone *an edit mode entry signal over the network from the client terminal … and switching the video editing environment to the cue point editing mode in response to receiving the edit mode entry signal*.

Accordingly, Claim 15 is not rendered obvious by Kim alone or in combination with Sull.

IX. THE CHALLENGED CLAIMS ARE NOT UNPATENTABLE AS OBVIOUS UNDER § 103 BY KIM AND GUPTA (GROUND 4)

The Petition applies Gupta to Kim only to address Limitation 13.4 and Limitation 13.5. Pet., 71-72. It does not apply Gupta to Limitation 13.1, which

requires *a video editing environment, and being disposed at a server side of a public network.* And as discussed above in Section VIII.A, Kim fails to teach or suggest Limitation 13.1. Accordingly, for the reasons set forth above in Section VIII.A, the combination of Kim and Gupta fails to disclose Limitation 13.1, and Claim 13, as well as dependent Claims 14-15 and 18-20, are not rendered unpatentable by the combination for at least the same reasons.

Similarly, the Petition does not apply Gupta to Kim for purposes of its analysis of Claim 15 of the '286 Patent. Accordingly, Claim 15 is patentable over Kim and Gupta for the reasons set forth above for Kim in Section VIII.C.

X. THE CHALLENGED CLAIMS ARE NOT UNPATENTABLE AS OBVIOUS UNDER § 103 BY VASILEVSKY AND LOGAN (GROUND 5)

A. Claim 13 is patentable because Vasilevsky and Logan fail to teach or suggest *providing a computer system … comprising a video editing environment, and being disposed at a server side of a public network* (Limitation 13.1)

As discussed, *supra*, in Section VI.A, during prosecution the inventor repeatedly confirmed that, as Claim 13 states, the *video editing environment* is a server-side program that allows the client terminal to remotely edit cue points over a public network, thus providing for **remote cue point editing** as opposed to **local cue point editing**. Limitation 13.1 reflects this requirement, reciting *providing a computer system … comprising a video editing environment, and being disposed at*

a server side of a public network. Vasilevsky does not teach or suggest a server-side *video editing environment* program interfacing with a remote client over a network, as claimed.

Vasilevsky provides for **localized** bookmark editing based a user's local input to a local application unit 134 located in the home with the bookmark database 162. Ex. 1008 (Vasilevsky), Fig. 1, 19:12-20 (input of local user command to application unit 134 in the home). Notably, the purported home "media server" in Vasilevsky includes both the bookmark database 162 and the application unit 134 where user inputs are provided to create and potentially edit bookmarks. This is confirmed in the Petitioner's diagram which identifies the alleged *video editing environment* as including **both** the bookmark database 162 and the application unit 134:

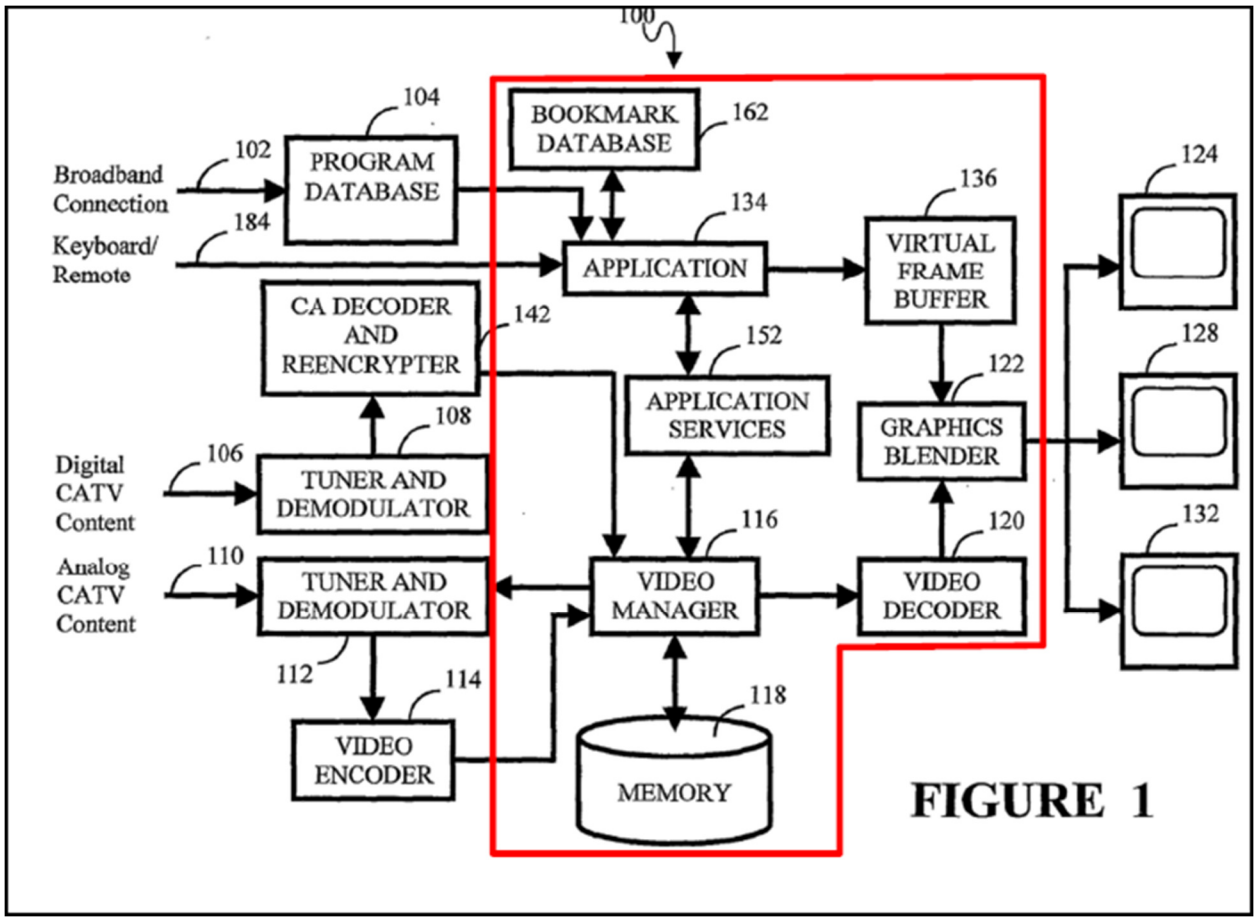

Pet., 75 (providing annotated Fig. 1 of Vasilevsky). Thus, the alleged *video editing environment* does not interface with a remote client terminal over a network, as required by the claim, because the client terminal (application unit 134) is **part of** the alleged *video editing environment*.

Additionally, Vasilevsky does not disclose, and the Petitioner makes no showing, that Vasilevsky's media server in Figure 1 is executing a *video editing environment* application, as required. In fact, Vasilevsky does not disclose *any* program operating in the "media server" for editing bookmarks.

Furthermore, Vasilevsky's media server is disposed on a home area network, not a public network, as claimed. Vasilevsky, 10:14-11:10 (connected "via a home area network (HAN)"), 11:9-13, 16:8-12. A home area network is not a *public network*, as conceded by the Petitioner.

The Petitioner refers to Logan in an effort to cure the absence of a public network in Vasilevsky. Pet., 76-78. However, the cited portions of Logan relate to creating "descriptive metadata" (e.g., bookmarks) at a TV broadcasting facility relating to TV programs and distributing the metadata over the Internet. There is no disclosure in Logan of a *video editing environment* program operating on the server-side to allow clients on the other side of the public network to remotely edit such metadata, as would be required by Limitation 13.1. Indeed, the cited portions of Logan do not even mention **editing** metadata or bookmarks—they only describe creating them. The cited portions do not teach or suggest clients editing the metadata or bookmarks, let alone doing so using a server side *video editing environment*.

Put another way, the Petitioner's reliance on Logan as generically "disclos[ing] a television program bookmarking system using a public network (Internet)" (Pet., 76) fails to teach or suggest the missing limitation of a *video editing environment* program for **editing** bookmarks on the server-side of a public network/Internet, as required by Limitation 13.1.

As such, for the reasons explained, neither Vasilevsky nor Logan, alone or in combination, teaches or suggests Limitation 13.1.

B. Claim 13 is patentable because Vasilevsky and Logan also fail to teach or suggest *receiving a cue point editing command over the network from a remote client terminal disposed at the client side of the public network using the computer system* and *modifying a portion of the cue point information at the server side … according to the cue point editing command received … from the client terminal* (Limitations 13.4 and 13.5)

Limitation 13.4 requires that the server-side *video editing environment* program receives a cue point editing command from the client that, pursuant to Limitation 13.5, causes the modification of cue point information in response to the command. '286 Patent, 55:9-15 (Cl. 13). Neither Vasilevsky nor Logan, alone or in combination, teaches or suggests these limitations.

In Vasilevsky, the application unit 134 receives a **local** command from a user. Vasilevsky, Fig. 1, 19:13-20. As such, it does not receive a command that is remotely transmitted from a client over a network as required by Limitation 13.4.

The Petition (at 83-84) refers to client 124 in Figure 1 and the "bookmark display" of Figure 6, which indicate that "[a] system user can enter or modify all of the information." Vasilevsky, Fig. 1, Fig. 6, 22:14-15. However, this does not teach or suggest a cue point/bookmark editing **command** received from the client **over the network** at the server-side of Vasilevsky's system. At best, Vasilevsky discloses that locally-edited bookmark information—not a bookmark editing

command—is transferred to the application unit 134/bookmark database 162. This does not satisfy Limitation 13.4 for a *cue point editing command*.

Regarding Limitation 13.5, Vasilevsky at best describes that modified bookmark information can be transferred into bookmark database 162 by application unit 134, not that bookmark information in the database is modified in response to a bookmark *cue point editing command*.

Further, the Petition cites nothing from Logan that it believes addresses this shortcoming. It cites Logan only in the context of Limitation 13.1—citing nothing in it for Limitations 13.4 or 13.5.

As such, for the reasons explained, neither Vasilevsky nor Logan, alone or in combination, teaches or suggests Limitations 13.4 or 13.5.

C. Claims 14-15 and 18-20 Are Patentable

Dependent Claims 14-15 and 18-20 are not unpatentable for at least the reasons set forth above for independent Claim 13.

D. Dependent Claim 15 also is patentable because Vasilevsky and Logan fail to teach or suggest *receiving an edit mode entry signal over the network from the client terminal representing entry into the cue point edit mode, and switching the video editing environment to the cue point editing mode in response to receiving the edit mode entry signal*

The Petitioner alleges that Figure 6 of Vasilevsky teaches the claimed *edit mode entry signal*. Pet., 87. But Figure 6 merely depicts a GUI of a "bookmark

display" that lists bookmarks for a program. Vasilevsky, 22:8-15. Vasilevsky states that "[a] system user can enter or modify all the information" of a bookmark. Vasilevsky, 22:14-15. The entirety of the disclosure of Figure 6 in Vasilevsky is:

> Figure 6 shows a variation 600 of the bookmark display 400 in Figure 4. The elements 610, 620, 630, 640, 650 and 660 are analogous to the elements 410, 420, 430, 440, 450 and 460, respectively. However, the identifier 650 is in the form of a more detailed text box that includes such information as the bookmark establisher's name, a title of the bookmark, and a brief description of what occurred in the program just prior to the pause point. A system user can enter or modify all of the information.

Vasilevsky, 22:8-15.

Vasilevsky's general statement that a user "can modify … the information" does not teach or suggest the claimed *edit mode entry signal.* At most, Vasilevsky suggests that a client can locally edit bookmark information. Vasilevsky thus does not remotely teach or suggest a command signal sent over a network from a client to a server-side *video editing environment* to effect editing, let alone an *edit mode entry signal* as claimed.

Logan likewise does not disclose Claim 15. In fact, the Petition does not cite it in support of any portion of its Claim 15 analysis.

XI. THE PETITION SHOULD BE DENIED PURSUANT TO *FINTIV*

The Petitioner should be discretionarily denied under Section § 314(a)

pursuant to *Apple Inc. v. Fintiv, Inc.*, IPR2020-00019, Paper 11 (PTAB Mar. 20, 2020) (prec.) ("*Fintiv*").

Under *Fintiv*, where there is a parallel district court proceeding involving the challenged patent the Board will consider the efficiency, fairness, and merits in deciding whether to exercise its discretion not to institute the IPR. In this instance, there is an existing district court litigation between the parties involving the '286 Patent, *WellcomeMat, LLC v. Aylo Holdings, S.à r.l., et al.*, Case No. 23-cv-483 (E.D. Tex.) ("EDTX Suit"), which was filed on October 13, 2023.

The Board considers six factors under *Fintiv*.

Fintiv Factor 1 considers whether it is likely that the district court would issue a stay if the IPR is instituted. Here, it is well known that EDTX courts are reluctant to issue stays, and there would be no basis to stay this case, particularly where there is a trial date of July 7, 2025, that is well in advance of the September 29, 2025, due date for a final written decision. Ex. 2001, 0001 (Docket Control Order). Factor 1 thus strongly weighs against institution.

Fintiv Factor 2 considers the timing of the trial date relative to the expected date of a Final Written Decision from the PTAB and in this case strongly weighs against institution. As noted, the trial date of July 7, 2025, is nearly three months ahead of the statutory deadline of September 29, 2025, for a decision in this IPR. The

projected date for trial applying the median time from-filing-to-disposition using 2023 statistics would be July 2025. See Ex. 2007 (National caseload statistics), 35.

Fintiv Factor 3 considers the investment in time and resources in the litigation as of the expected date of institution. Here, Factor 3 also weighs against institution. At the projected date for institution of September 29, 2024, the parties will have submitted their infringement contentions and invalidity contentions. The parties also will have exchanged their initial positions on disputed claim terms. Ex. 2001, 4-5.

Fintiv Factor 4 evaluates whether there is overlap in the arguments and prior art in the petition and the litigation. Factor 4 strongly weighs against institution because Aylo has not submitted a *Sotera* stipulation. See Pet., 2-3. *Sotera Wireless, Inc. v. Masimo Corp.*, IPR2020-01015, Paper 12 (PTAB Dec. 1, 2020) (prec.), 2020 WL 7049372, at *7. Moreover, Aylo's invalidity contentions in the litigation assert a number of references identified in the grounds for this IPR. See Ex. 2011 (Aylo Invalidity Contentions), 22-23 (Gupta, Fegan), 30-31 (Kim). Proceeding with an IPR in parallel with the EDTX litigation will very likely lead to duplicative validity determinations that may also be conflicting.

Fintiv Factor 5 also weighs against institution because the same parties named in the IPR are named in the litigation. The disclosed real-parties-in-interest in the Petition (see Pet., xii) are defendants in the litigation (see Ex. 2008, amended complaint), 1.

Fintiv Factor 6 considers other relevant factors and circumstances, which here weigh strongly against institution. For example, Patent Holder WellcomeMat practices the '286 Patent and marks its website with the patent. See https://go.wellcomemat.com/integrate-videos (Ex. 2002, 5-6). Additionally, the Petitioner was placed on notice of its infringement of the '286 Patent back in 2021— long before this IPR and the EDTX suit was filed— and yet refused to take a license. See Ex. 2008 (amended complaint), 2-3, 18-19. Finally, as discussed in detail, *supra*, the merits of this Petition are not strong because it fails to establish a reasonable likelihood, let alone compelling merits, that Claims 13-15 and 18-20 are unpatentable.

Pursuant to Director Vidal's June 2002 memorandum, if *Fintiv* Factors 1-5 favor denial, as they do here, then the burden is on the Petitioner to either provide a *Sotera* stipulation or demonstrate compelling merits of unpatentability. *See CommScope Technologies LLC v. Dali Wireless, Inc.,* IPR2022-01242, Paper No. 23 (PTAB Feb. 27, 2023) (prec.), at *3-5; *Interim Procedure for Discretionary Denials* (Director Katherine Vidal: June 21, 2022), at 2-3. Aylo has done neither. The Petitioner dutifully references "compelling merits" (Pet., 1), but does not identify any single claim where it has met the compelling merits standard, let alone explain why it meets that standard. As explained in Section VI-X, the Petitioner has failed to meet the lower "reasonable likelihood" standard. This Petition should be

denied pursuant to *Fintiv* and validity should proceed for adjudication in the district court.

XII. CONCLUSION

For the reasons set forth above, the Petition fails to demonstrate a reasonable likelihood that any of challenged Claims 13-15 and 18-20 of the ’286 Patent are unpatentable.

Dated: June 28, 2024

Respectfully submitted,

/Stephen T. Schreiner/
Stephen T. Schreiner (Reg. No. 43,097)
CARMICHAEL IP, PLLC
8607 Westwood Center Drive
Suite 270
Tysons, VA 22182
Tel: (703) 646-9254
schreiner@carmichaelip.com

Counsel for Patent Owner

CERTIFICATE OF COMPLIANCE WITH TYPE-VOLUME LIMITS

This Patent Owner Preliminary Response consists of 10,169 words, excluding table of contents, table of authorities, certificate of service, this certificate, or table of exhibits. The Response complies with the type-volume limitation of 14,000 words as set forth in 37 C.F.R. § 42.24. In preparing this certificate, counsel has relied on the word count of the word-processing system used to prepare the paper (Microsoft Word).

Dated: June 28, 2024

/Stephen T. Schreiner/
Stephen T. Schreiner (Reg. No. 43,097)
CARMICHAEL IP, PLLC
8607 Westwood Center Drive
Suite 270
Tysons, VA 22182
Tel: (703) 646-9254
schreiner@carmichaelip.com

Counsel for Patent Owner

CERTIFICATE OF SERVICE

I hereby certify that on June 28, 2024, I caused a true and correct copy of the foregoing Corrected Patent Owner Preliminary Response to be served on the following counsel for Petitioner by electronic mail to the following email addresses:

Frank M. Gasparo
Jonathan M. Sharrett
Stephen K. Yam
Venable LLP
151 West 42nd Street, 49th Floor
New York, NY 10036
Email: fmgasparo@venable.com
Email: jsharret@venable.com
Email: syam@venable.com

By: /Stephen T. Schreiner/
Stephen T. Schreiner (Reg. No. 43,097)
CARMICHAEL IP, PLLC
8607 Westwood Center Drive
Suite 270
Tysons, VA 22182
Tel: (703) 646-9254
schreiner@carmichaelip.com

Counsel for Patent Owner