US008238754B2

(12) **United States Patent**
Soto et al.

(10) **Patent No.: US 8,238,754 B2**
(45) **Date of Patent: Aug. 7, 2012**

(54) **SYSTEM AND METHOD FOR PLUGGABLE OPTICAL MODULES FOR PASSIVE OPTICAL NETWORKS**

(76) Inventors: **Alexander I Soto**, San Diego, CA (US); **Walter G Soto**, San Clemente, CA (US)

(*) Notice: Subject to any disclaimer, the term of this patent is extended or adjusted under 35 U.S.C. 154(b) by 40 days.

(21) Appl. No.: **12/982,872**

(22) Filed: **Dec. 30, 2010**

(65) **Prior Publication Data**

US 2011/0150475 A1 Jun. 23, 2011

Related U.S. Application Data

(63) Continuation of application No. 10/886,514, filed on Jul. 6, 2004, now Pat. No. 7,925,162.

(60) Provisional application No. 60/485,072, filed on Jul. 3, 2003, provisional application No. 60/515,836, filed on Oct. 30, 2003.

(51) **Int. Cl.**
H04J 14/08 (2006.01)

(52) **U.S. Cl.** **398/100**

(58) **Field of Classification Search** 398/66–67, 398/98–100

See application file for complete search history.

(56) **References Cited**

U.S. PATENT DOCUMENTS

4,701,909	A	10/1987	Kavehrad
4,776,041	A	10/1988	Husbands
5,029,333	A	7/1991	Graves et al.
5,572,349	A	11/1996	Hale et al.
6,023,467	A	2/2000	Abdelhamid et al.
6,498,667	B1	12/2002	Masucci et al.
6,778,399	B2	8/2004	Medina et al.
6,788,833	B1	9/2004	Brisson et al.
6,792,207	B2	9/2004	Iannone et al.
6,970,461	B2	11/2005	Unitt et al.
7,031,343	B1	4/2006	Kuo et al.
2002/0006111	A1	1/2002	Akita et al.
2002/0067529	A1	6/2002	Yokomoto et al.
2002/0163921	A1	11/2002	Ethridge et al.
2003/0091045	A1	5/2003	Choi et al.
2003/0227926	A1	12/2003	Ramamurthy et al.
2003/0236916	A1	12/2003	Adcox et al.
2004/0052274	A1	3/2004	Wang et al.

OTHER PUBLICATIONS

E. Modiano et al., "A Novel Medium Access Control Protocol for WDM-Based LAN's and Access Networks Using a . . . ", Journal of Lightwave Tech., vol. 18, No. 4, Apr. 2000.

M. Saches et al., "Fibre Channel and Related Standards", IEEE Communications Magazine, Aug. 1996.

Rodovanovic, "Ethernet-Based Passive Optical Local-Area Networks for Fiber-to-the-Desk Application", Journal of Lightwave Tech., Nov. 2003, pp. 2534-2545 vol. 21 No. 11.

Chaing et al, "Implementation of STARNET: A WDM Computer Communications Network", Journal on Selected Ares of Communications, Jun. 1996, pp. 824-839, vol. 14, No. 5.

Rawson, Eric, "The Fibernet II Ethernet-Compatible Fiber-Optic LAN", IEEE Journal of Lightwave Technology, Jun. 1985, pp. 496-501, vol. LT-3, No. 3.

E. Modiano, "WDM-Based Packet Networks", IEEE Communications Magazine, Mar. 1999.

E.Modiano, "Design and Analysis of an Asynchrounous WDM Local Area Network Using a Master/Slave Scheduler", IEEE, 1999.

R. Mauger, The Integration of ATM, SDH and PON Technology in the Access Network, Fourth IEE Conference on Telecommunications 1993.

Primary Examiner — Shi K Li

(57) **ABSTRACT**

An optical local area network includes a passive optical distribution fabric interconnecting a plurality of nodes including a first node and a plurality of remaining nodes, a hub that includes the first node and a control module, and a client network adapter coupled to each of the remaining nodes for responding to the control module. The control module controls timing for each of the client network adapters to transmit signals over the passive optical distribution fabric and distribution of signals to each of the nodes.

65 Claims, 21 Drawing Sheets

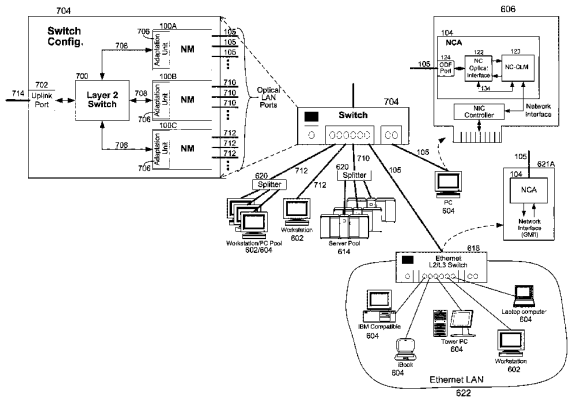

Nokia of America Corporation
IPR2023-00960, Ex. 1001
Ex. 1001.001

AT&T Ex. 1001

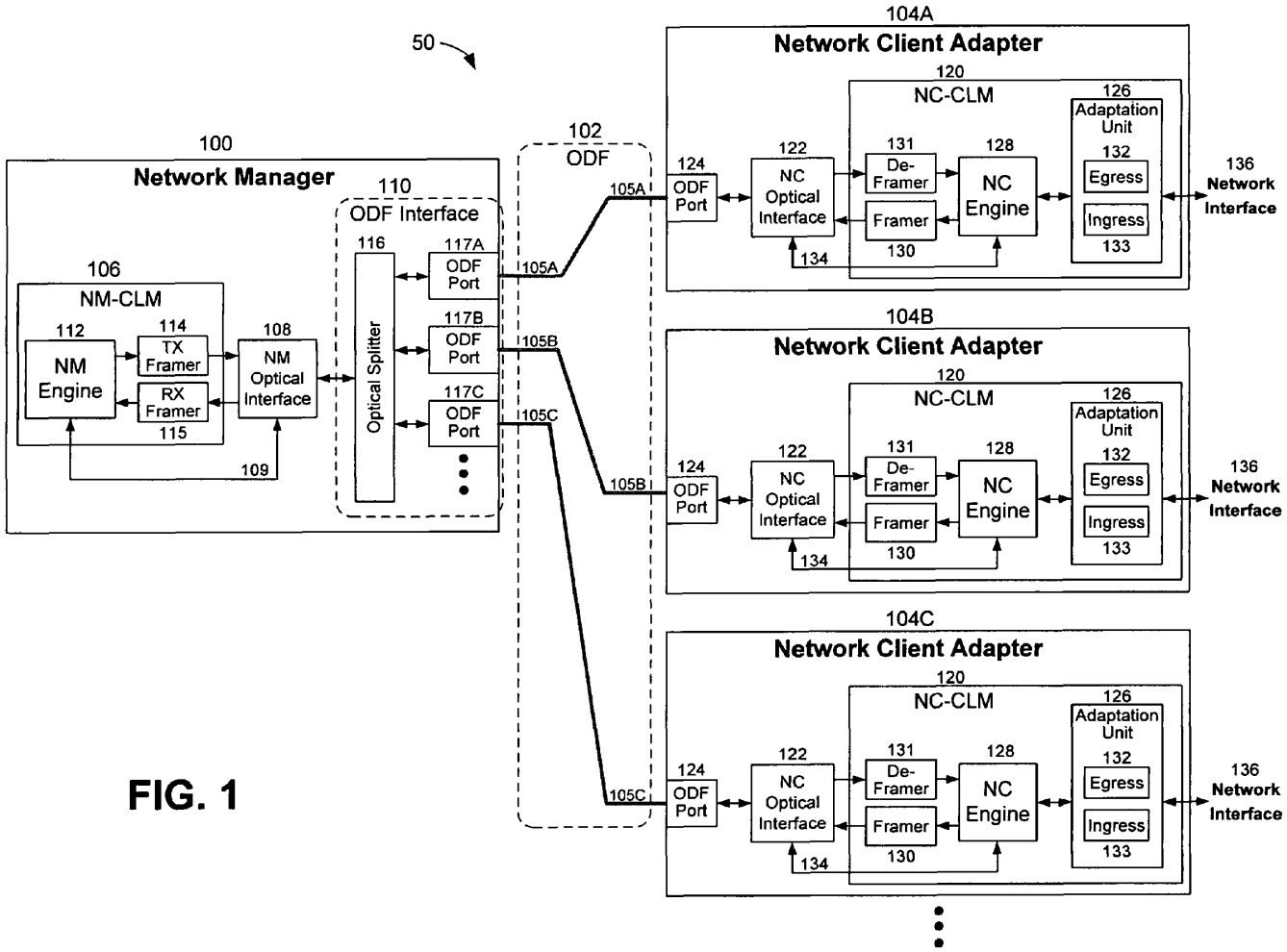

FIG. 1

Nokia of America Corporation
IPR2023-00960, Ex. 1001
Ex. 1001.002

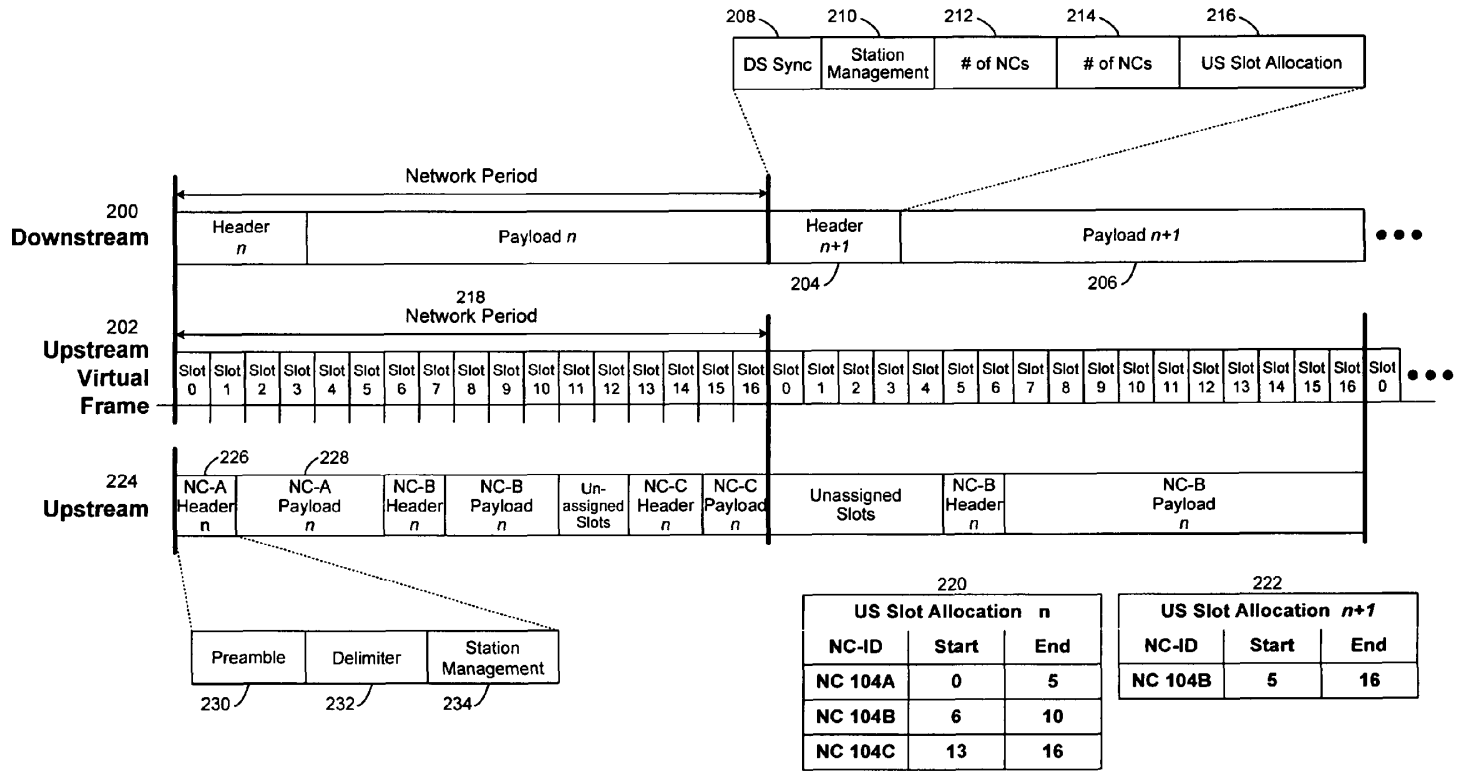

FIG. 2

Nokia of America Corporation
IPR2023-00960, Ex. 1001
Ex. 1001.003

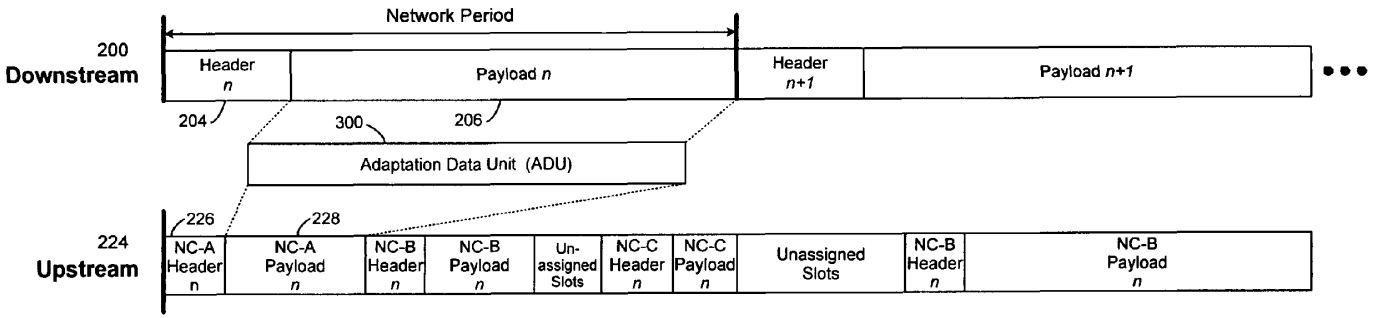

FIG. 3A

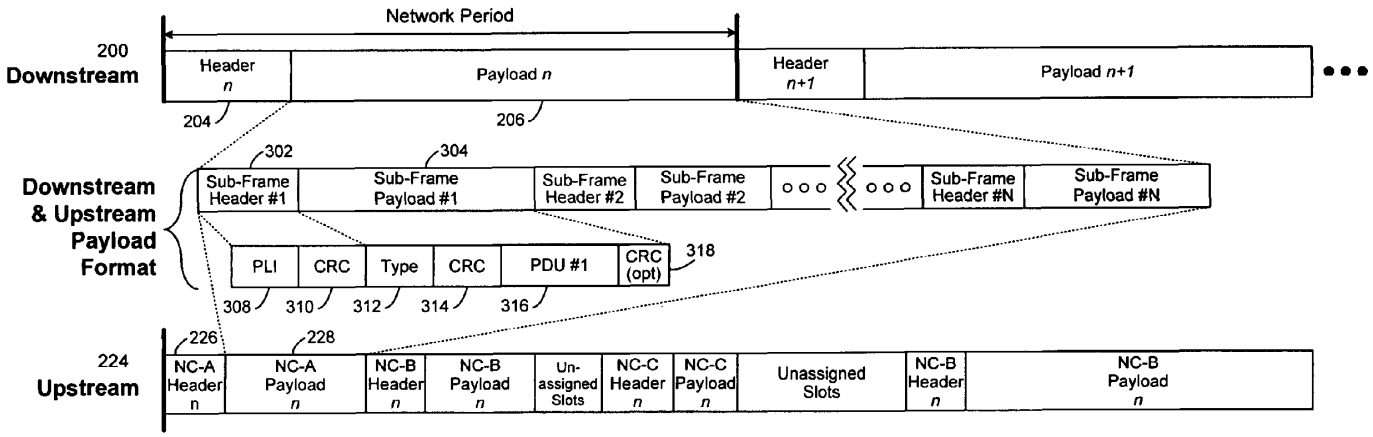

FIG. 3B

Nokia of America Corporation
IPR2023-00960, Ex. 1001
Ex. 1001.004

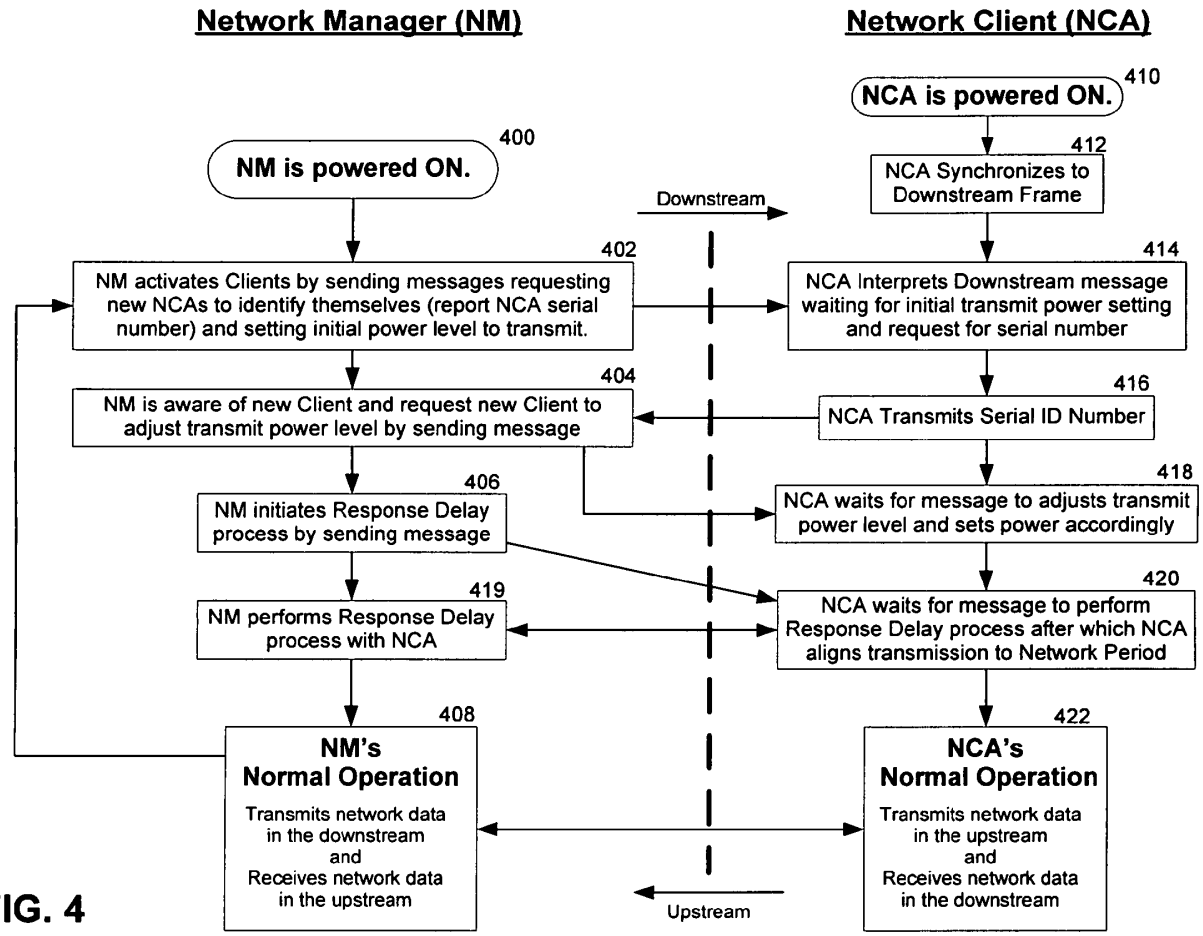

FIG. 4

Nokia of America Corporation
IPR2023-00960, Ex. 1001
Ex. 1001.005

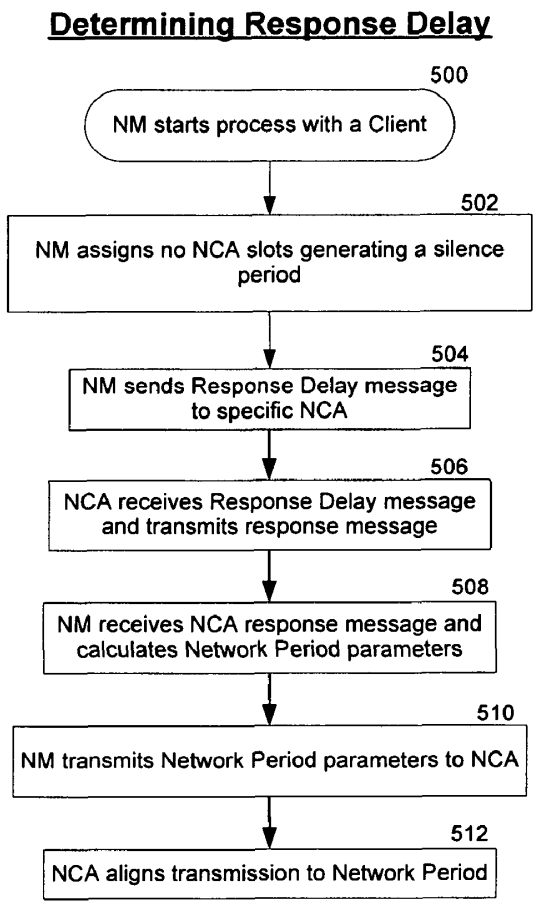

FIG. 5

Nokia of America Corporation
IPR2023-00960, Ex. 1001
Ex. 1001.006

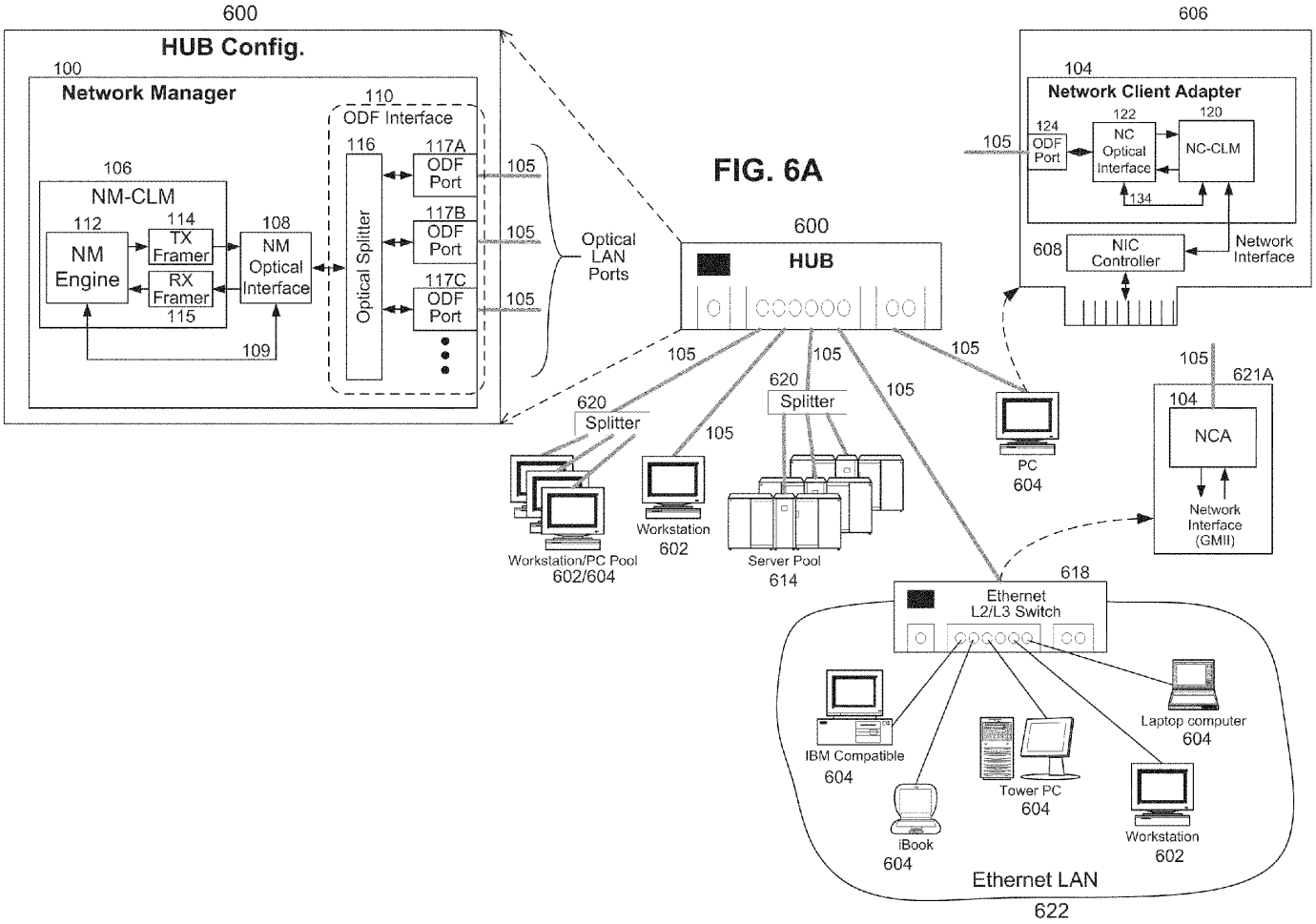

Nokia of America Corporation
IPR2023-00960, Ex. 1001
Ex. 1001.007

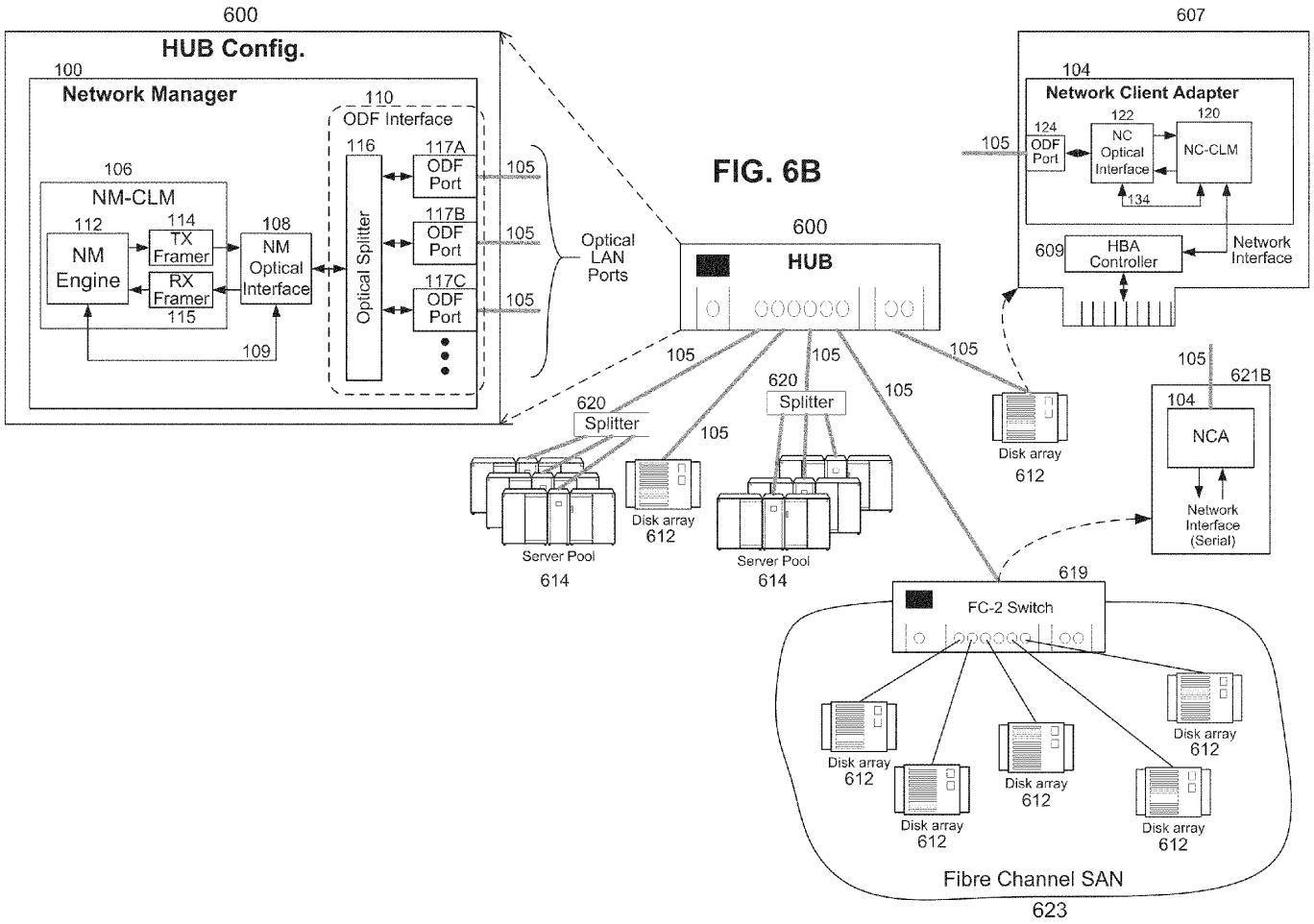

Nokia of America Corporation
IPR2023-00960, Ex. 1001
Ex. 1001.008

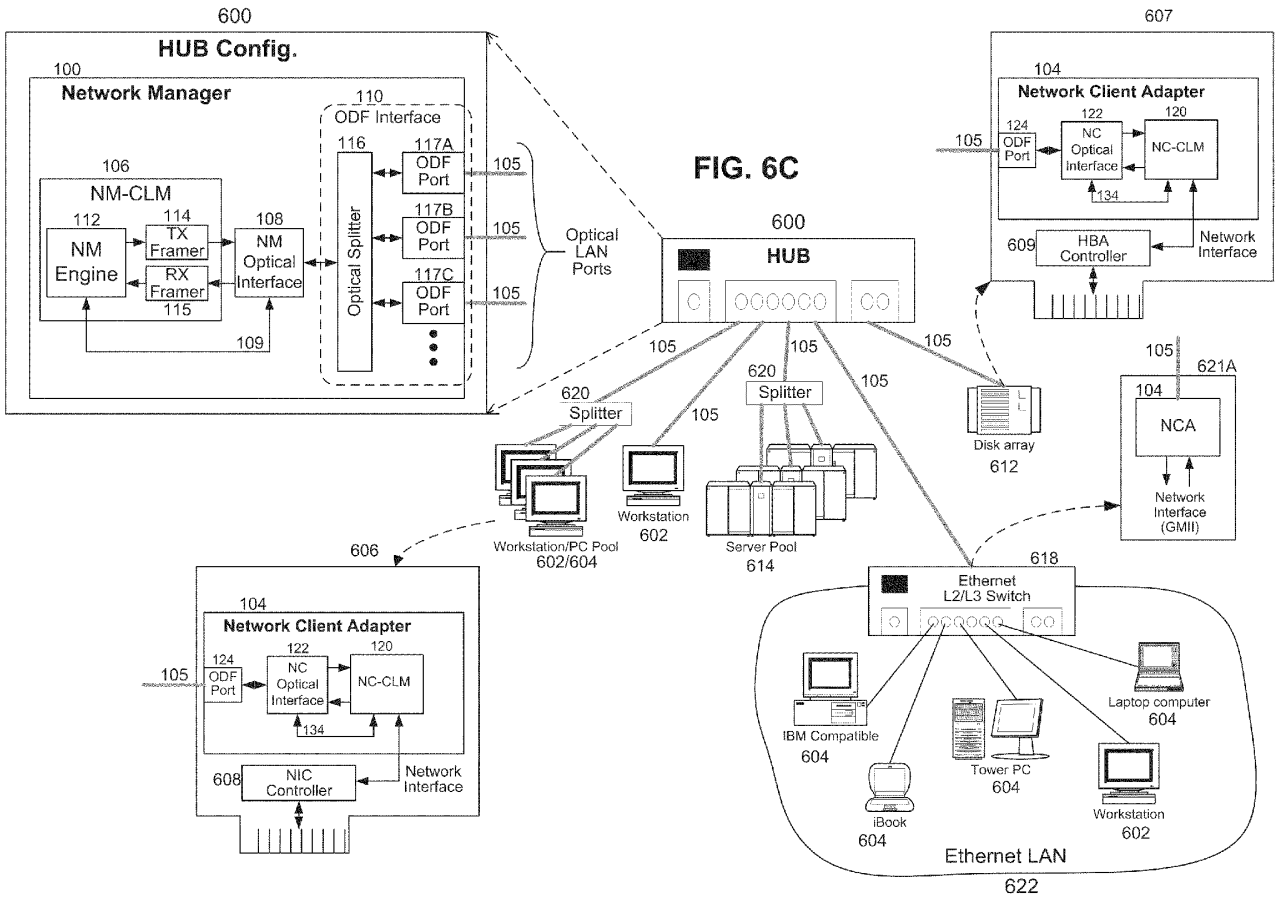

Nokia of America Corporation
IPR2023-00960, Ex. 1001
Ex. 1001.009

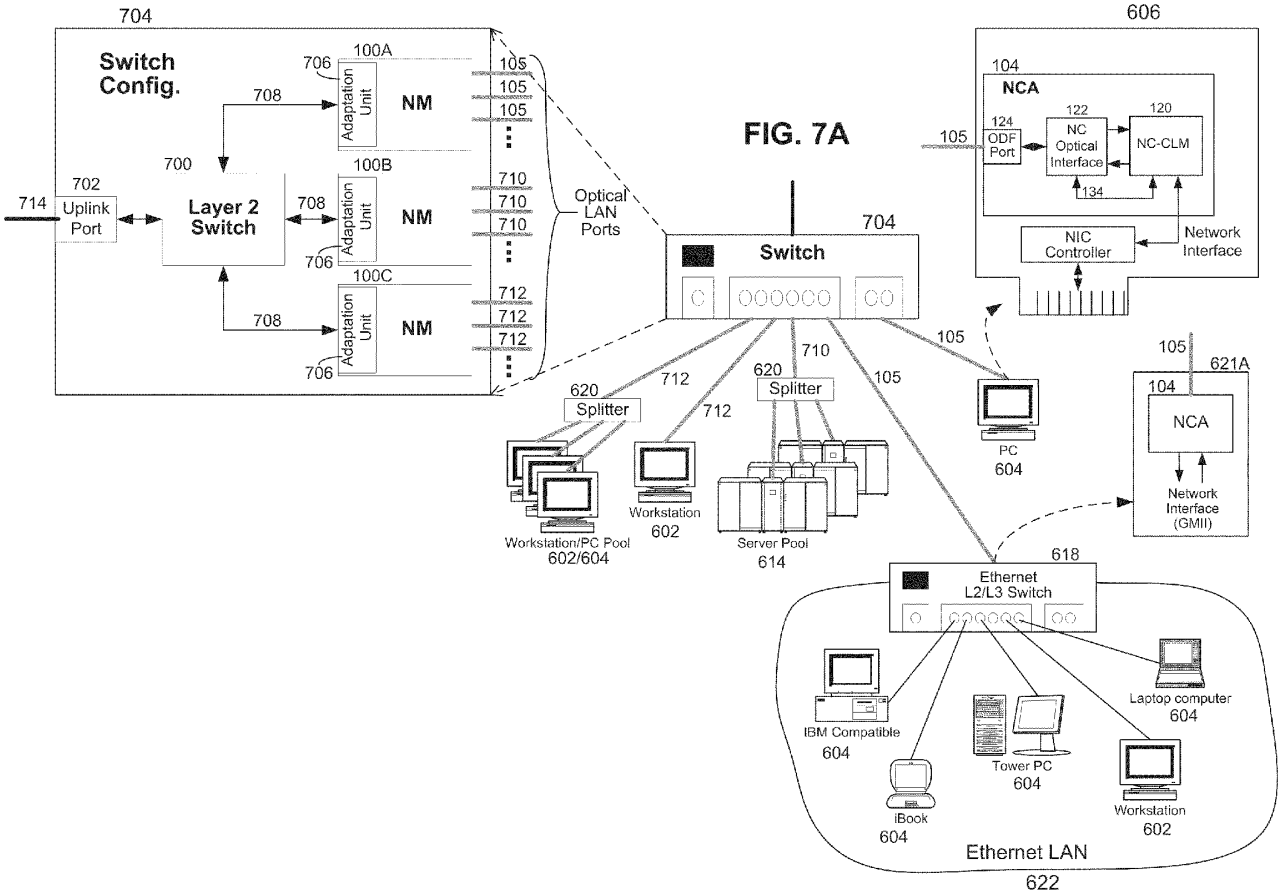

Nokia of America Corporation
IPR2023-00960, Ex. 1001
Ex. 1001.010

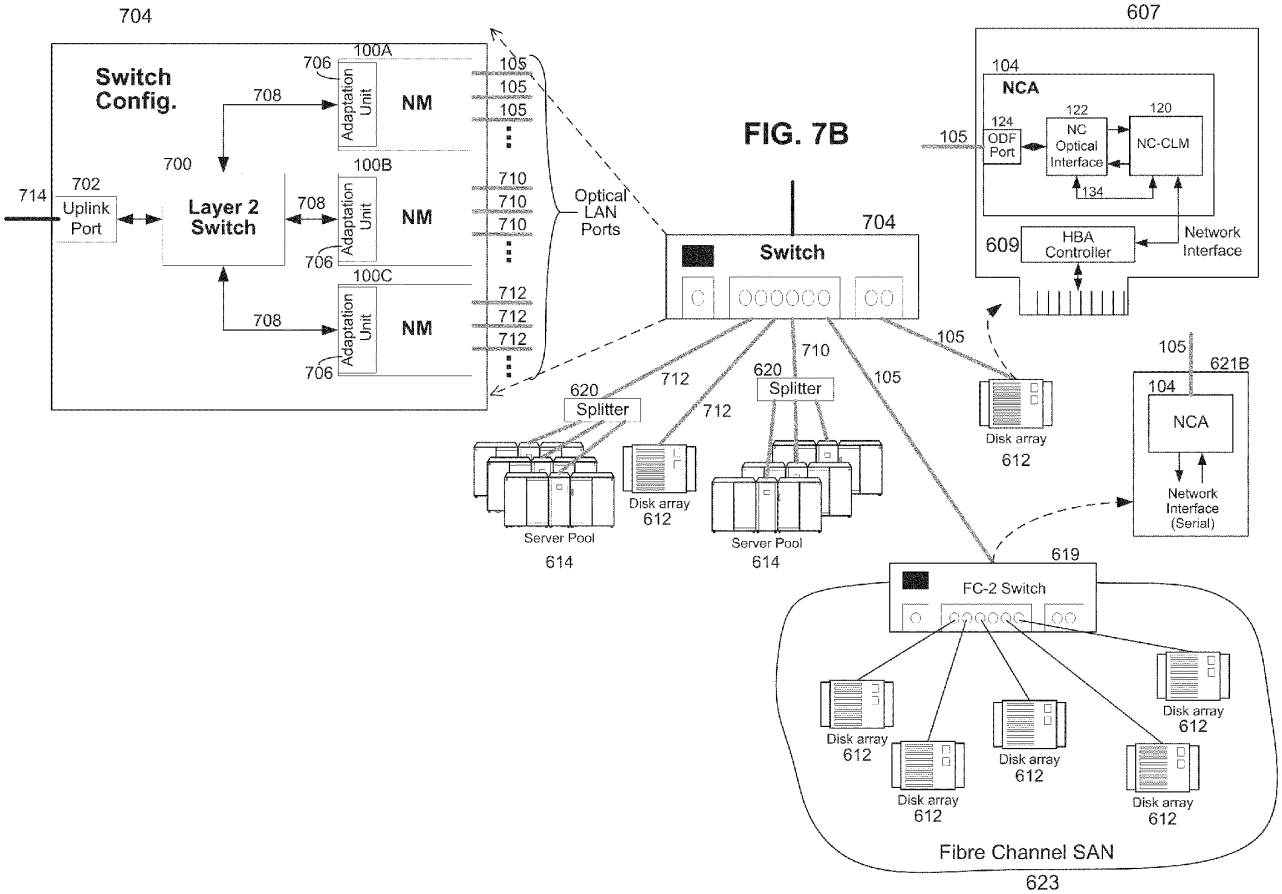

Nokia of America Corporation
IPR2023-00960, Ex. 1001
Ex. 1001.011

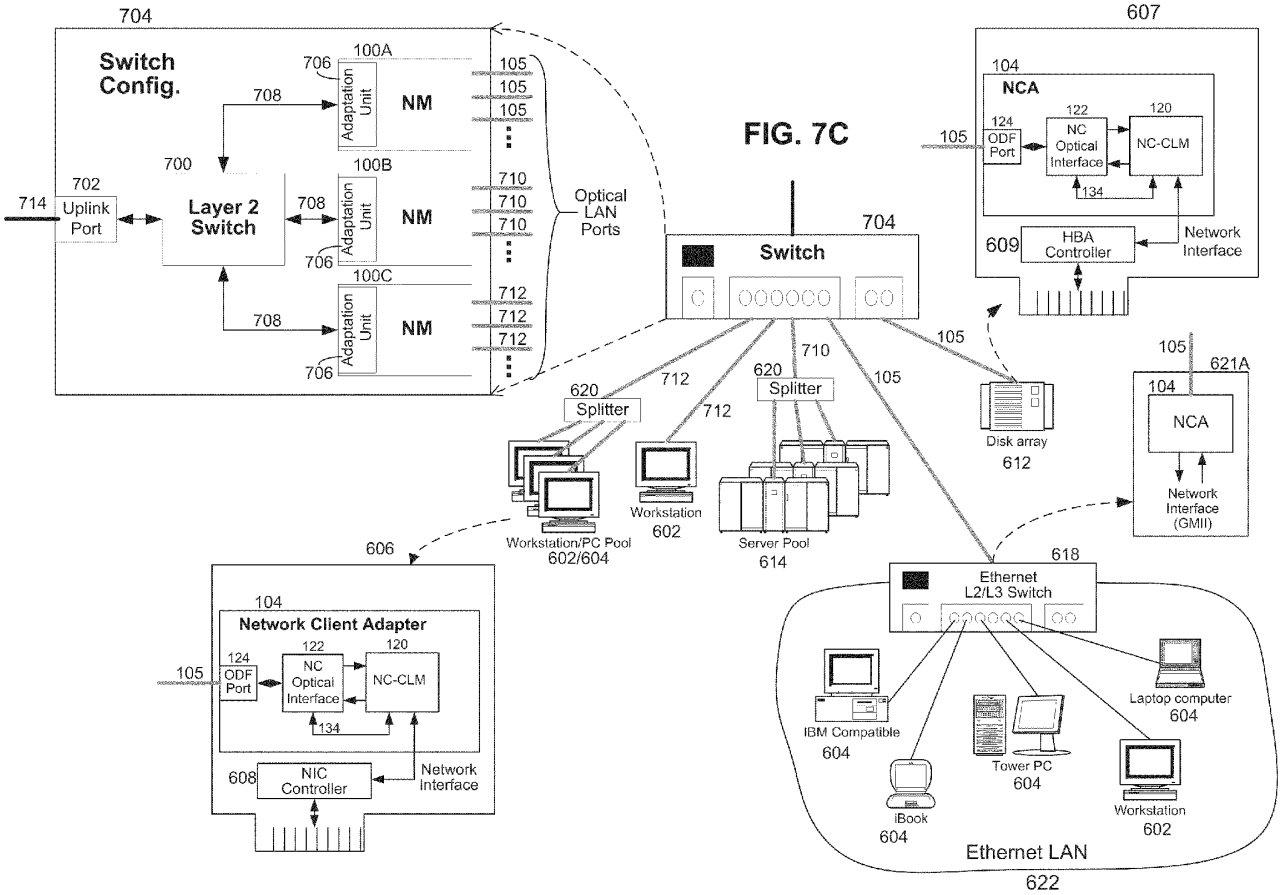

FIG. 7C

Nokia of America Corporation
IPR2023-00960, Ex. 1001
Ex. 1001.012

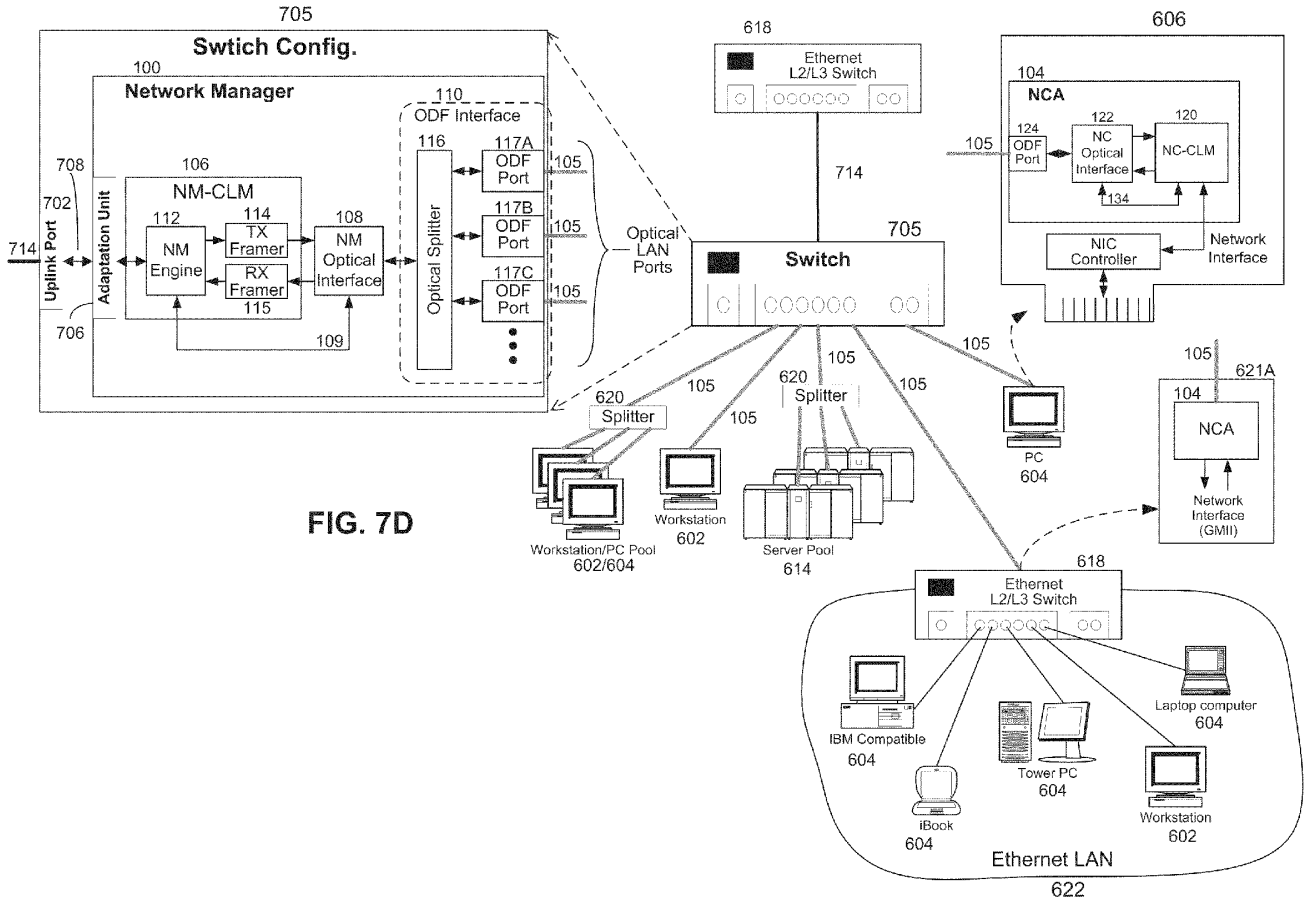

FIG. 7D

Nokia of America Corporation
IPR2023-00960, Ex. 1001
Ex. 1001.013

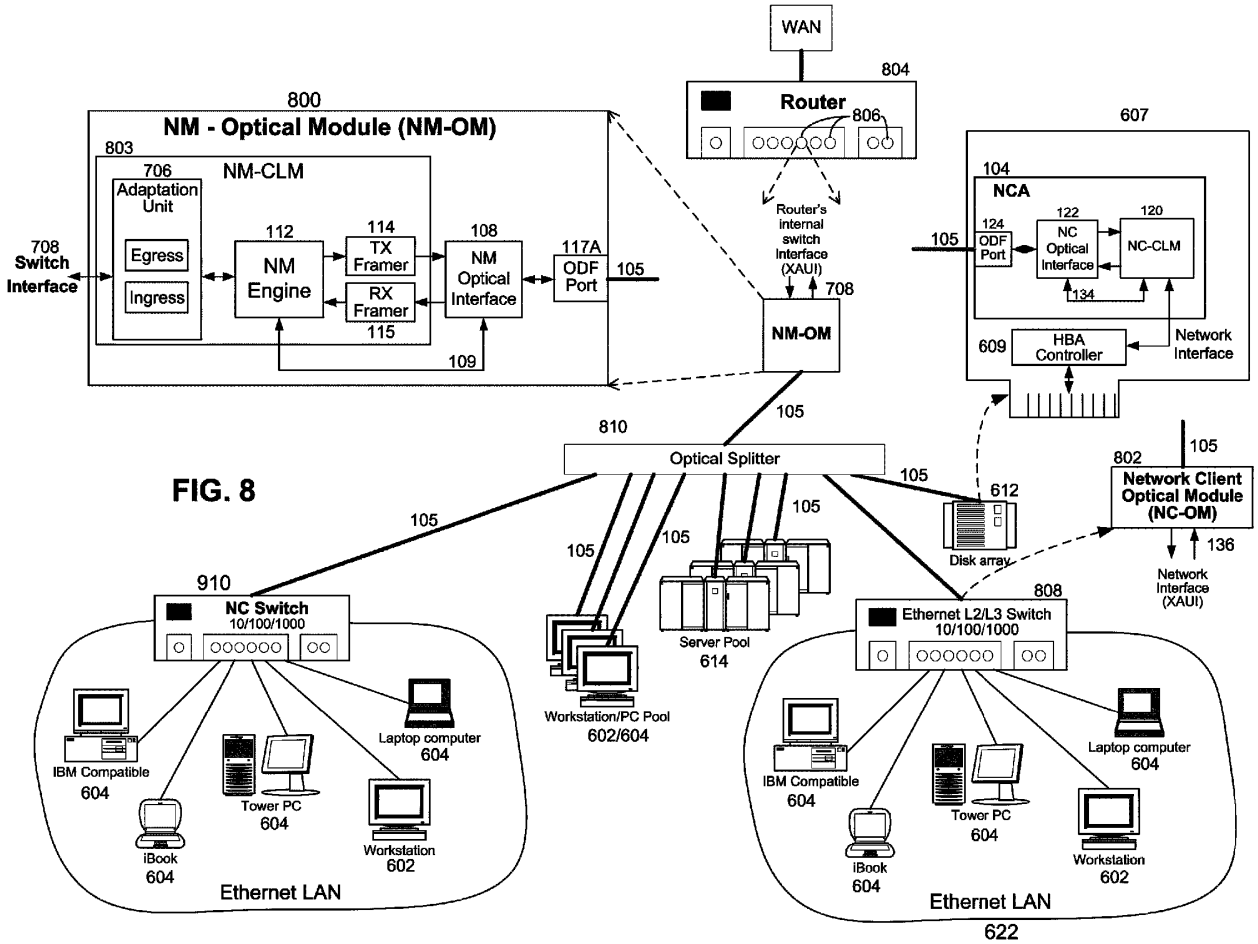

FIG. 8

Nokia of America Corporation
IPR2023-00960, Ex. 1001
Ex. 1001.014

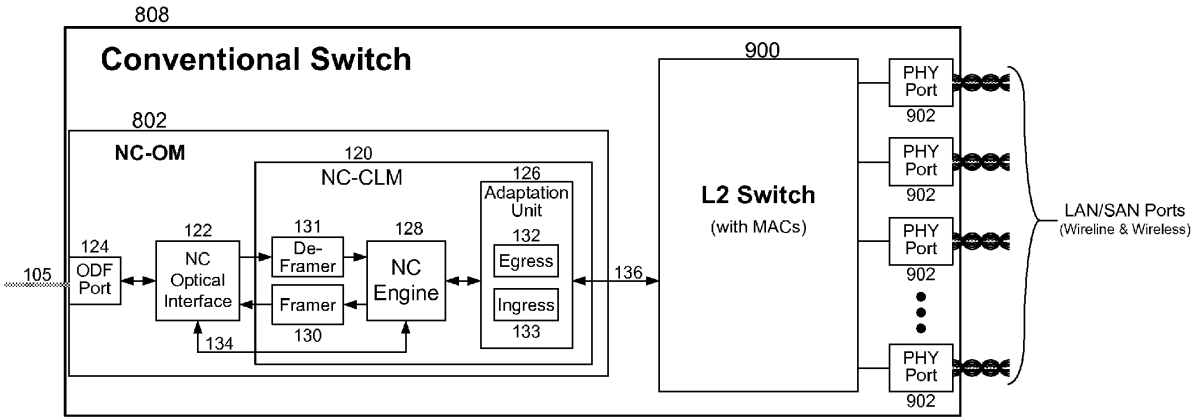

FIG. 9

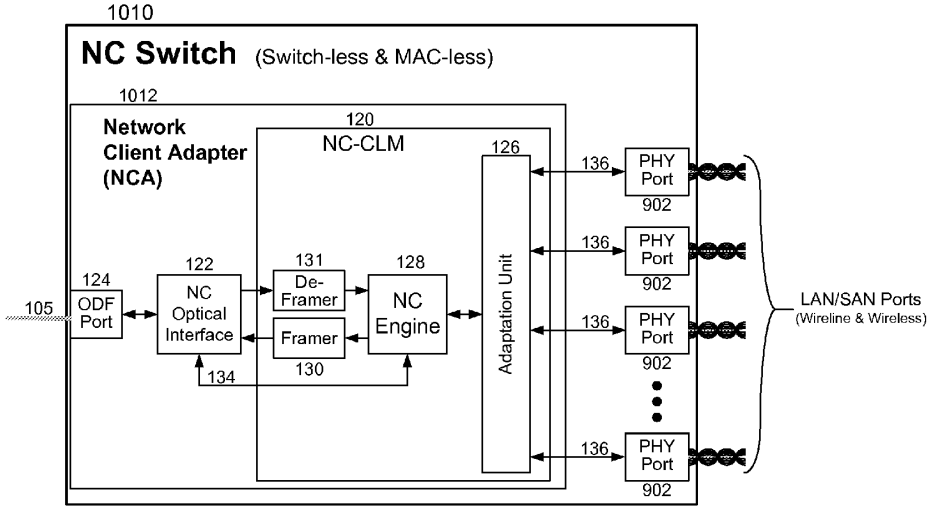

FIG. 10

Nokia of America Corporation
IPR2023-00960, Ex. 1001
Ex. 1001.015

Prior art

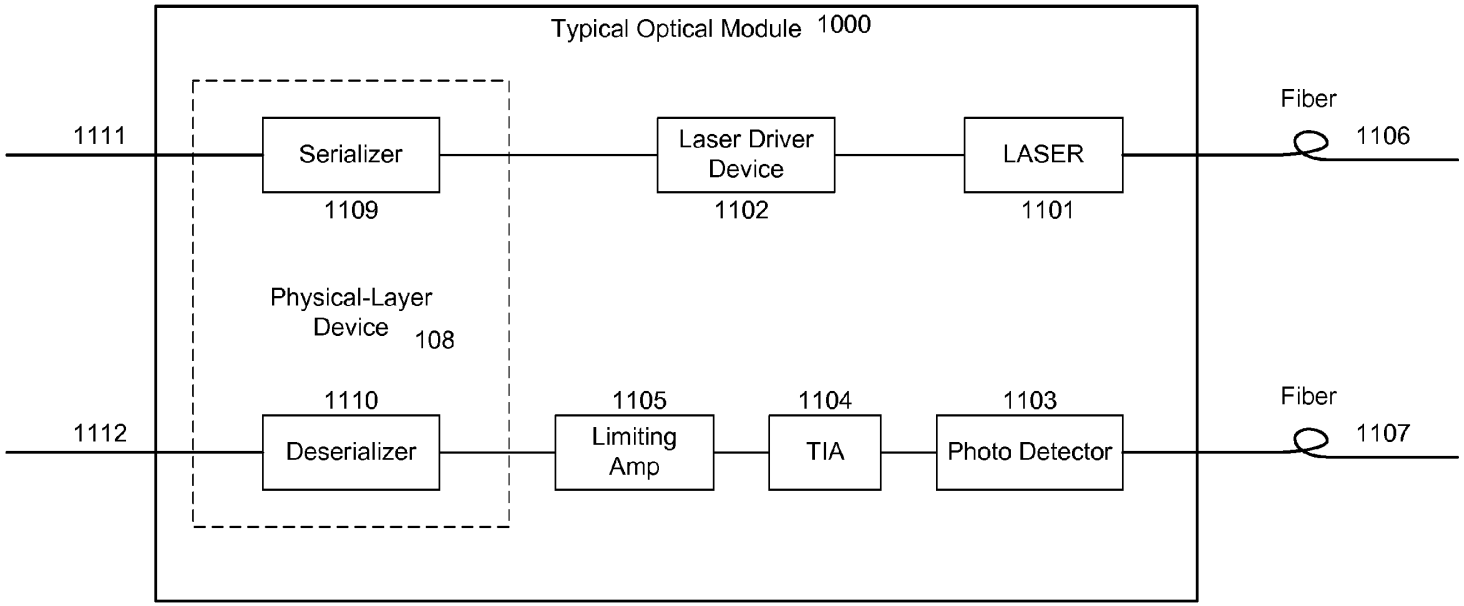

FIG. 11

Nokia of America Corporation
IPR2023-00960, Ex. 1001
Ex. 1001.016

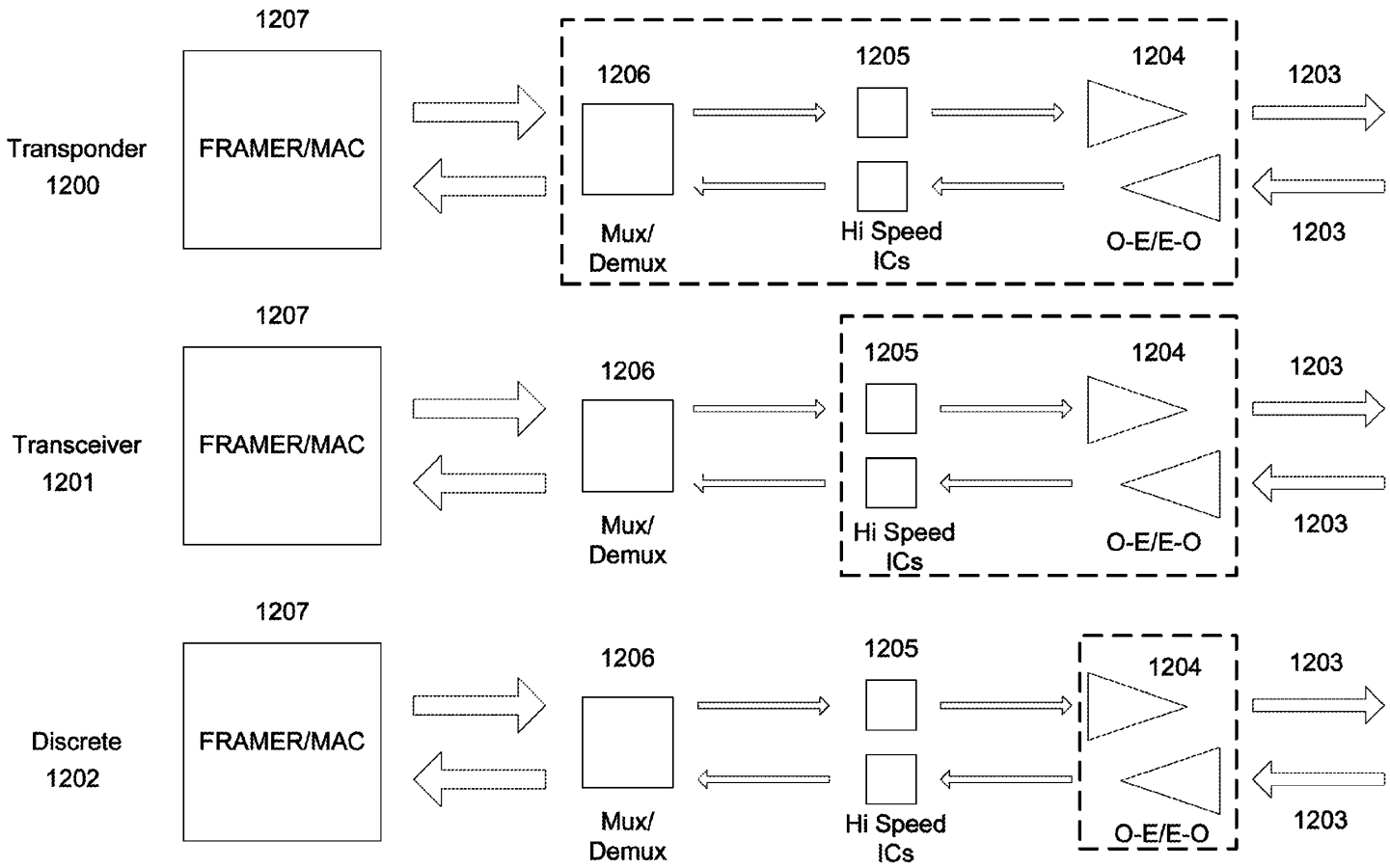

Prior art

FIG. 12

Nokia of America Corporation
IPR2023-00960, Ex. 1001
Ex. 1001.017

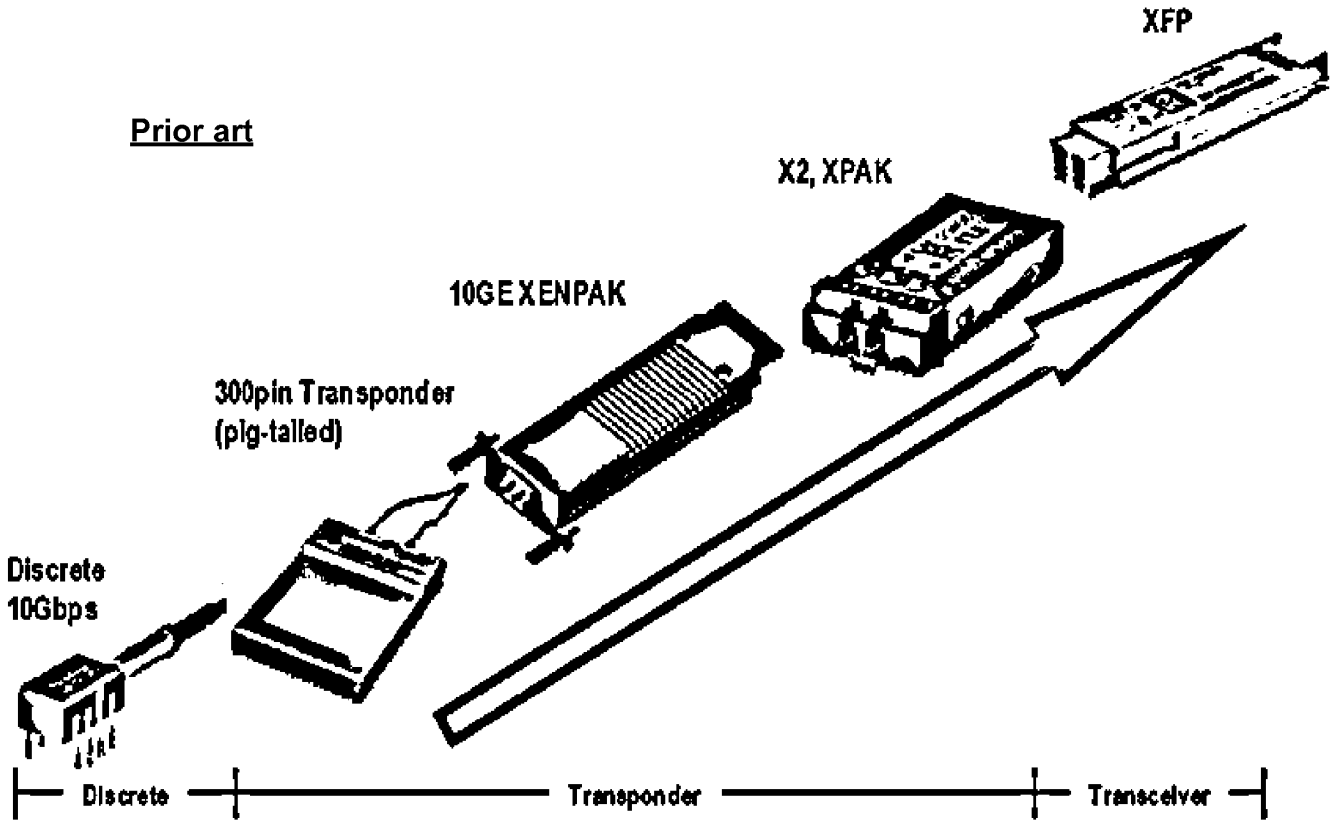

FIG. 13

Nokia of America Corporation
IPR2023-00960, Ex. 1001
Ex. 1001.018

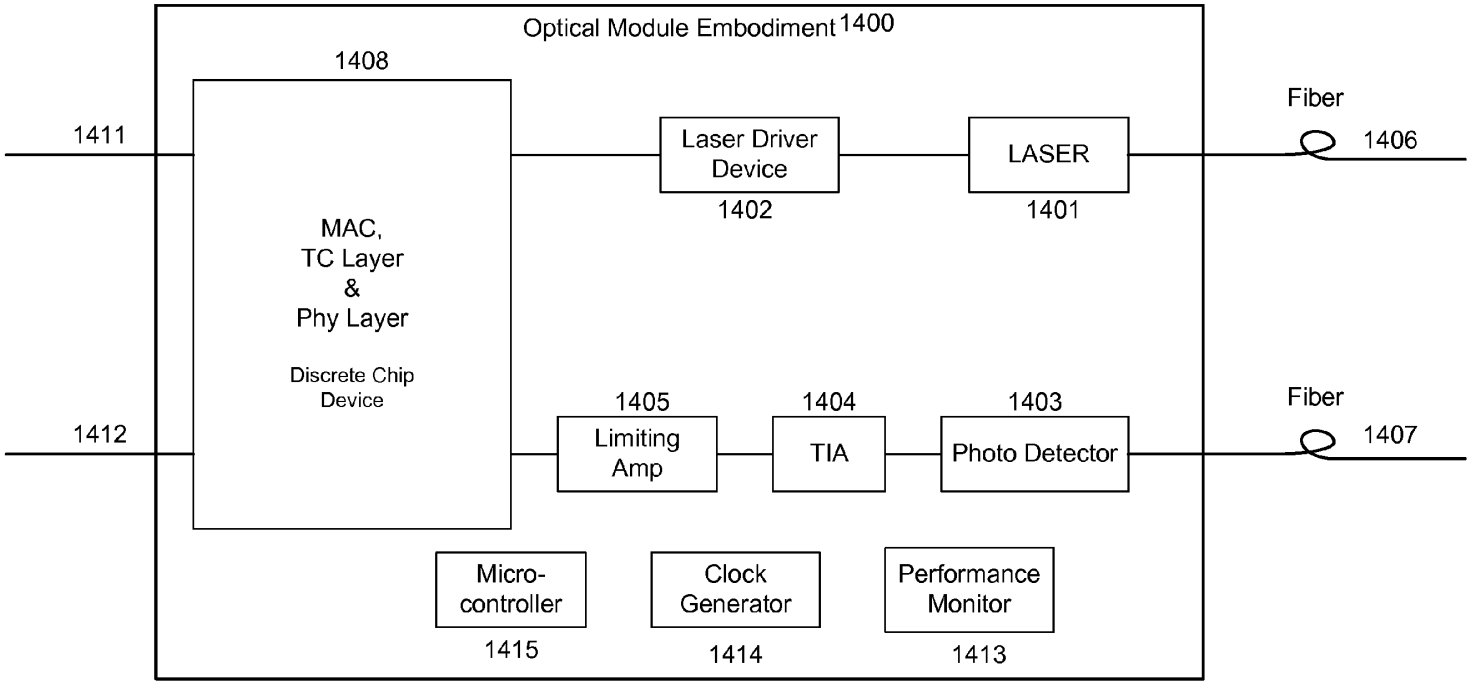

FIG. 14

Nokia of America Corporation
IPR2023-00960, Ex. 1001
Ex. 1001.019

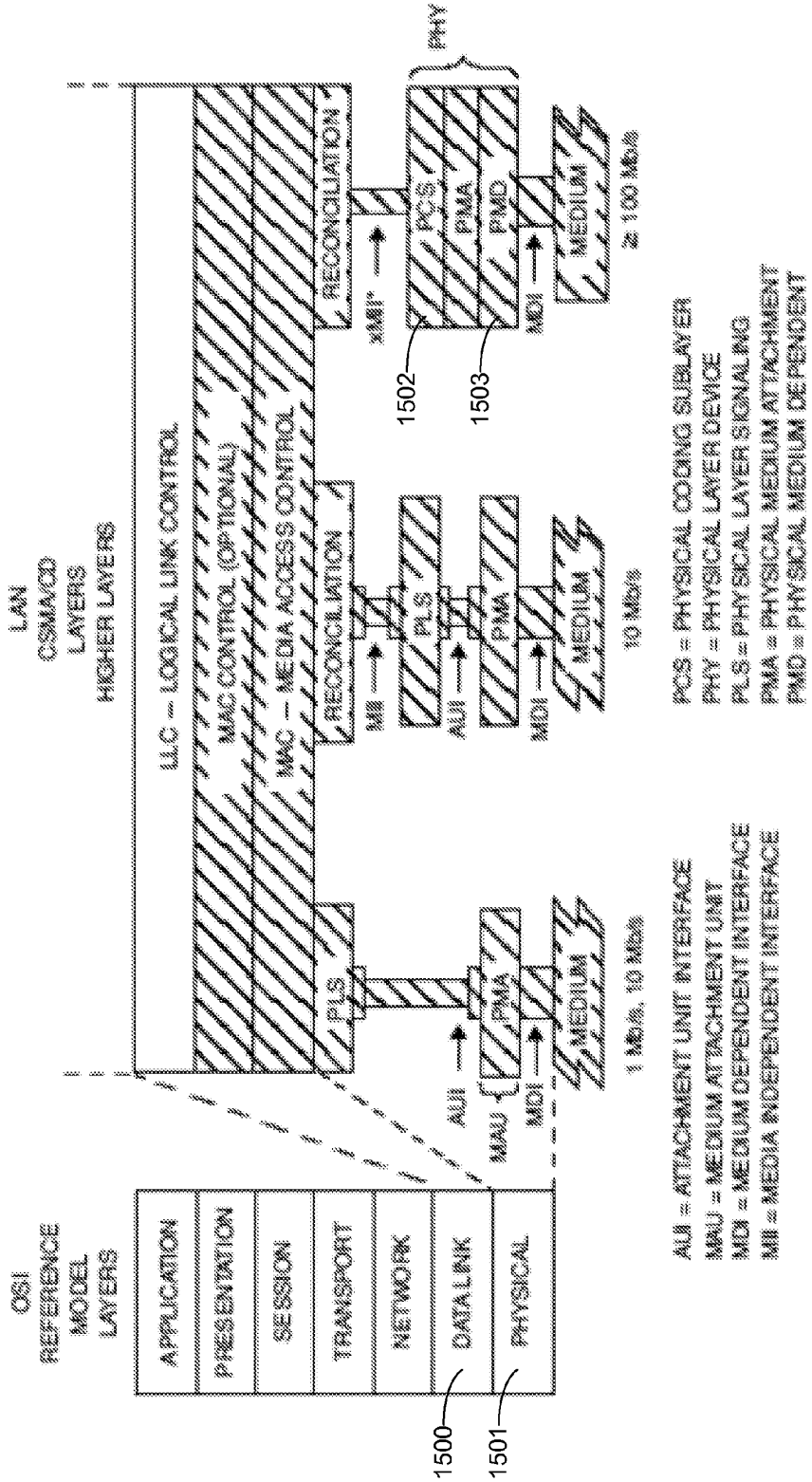
OSI REFERENCE MODEL LAYERS
APPLICATION
PRESENTATION
SESSION
TRANSPORT
NETWORK
DATA LINK
PHYSICAL
1500
1501
LAN CSMA/CD LAYERS
HIGHER LAYERS
LLC – LOGICAL LINK CONTROL
MAC CONTROL (OPTIONAL)
MAC – MEDIA ACCESS CONTROL
RECONCILIATION
PLS
AUI
PMA
MAU
MDI
MEDIUM
1 Mb/s, 10 Mb/s
MII
10 Mb/s
xMII
PCS
PMD
PHY
1502
1503
≥ 100 Mb/s
AUI = ATTACHMENT UNIT INTERFACE
MAU = MEDIUM ATTACHMENT UNIT
MDI = MEDIUM DEPENDENT INTERFACE
MII = MEDIA INDEPENDENT INTERFACE
PCS = PHYSICAL CODING SUBLAYER
PHY = PHYSICAL LAYER DEVICE
PLS = PHYSICAL LAYER SIGNALING
PMA = PHYSICAL MEDIUM ATTACHMENT
PMD = PHYSICAL MEDIUM DEPENDENT

FIG. 15

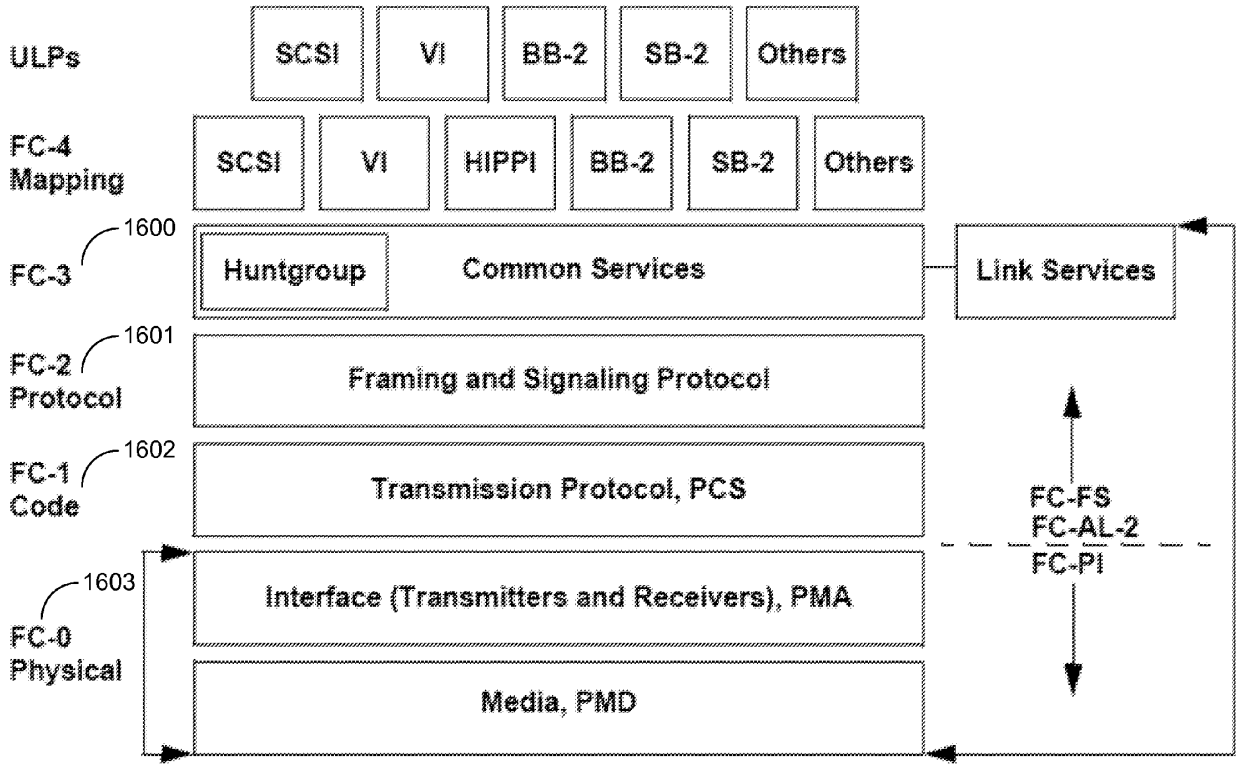

FIG. 16

Nokia of America Corporation
IPR2023-00960, Ex. 1001
Ex. 1001.021

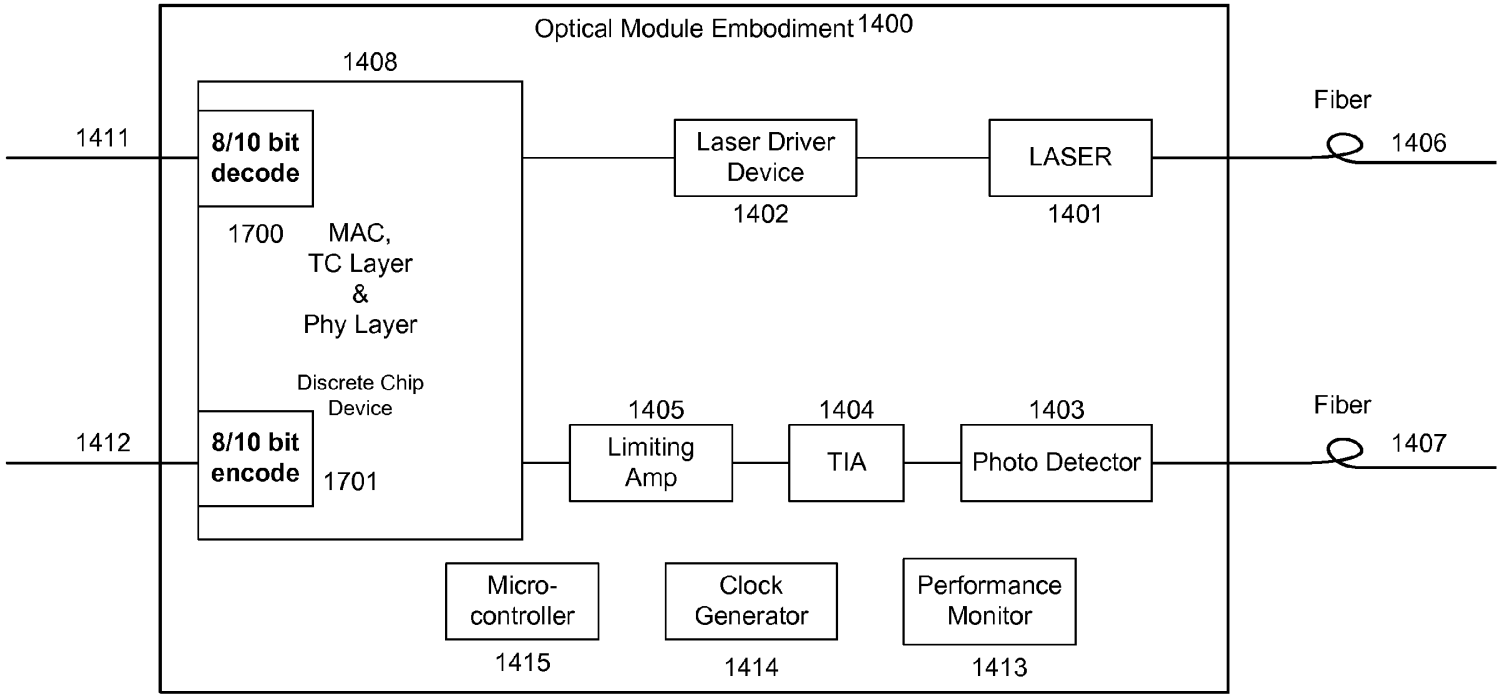

FIG. 17

Nokia of America Corporation
IPR2023-00960, Ex. 1001
Ex. 1001.022

SYSTEM AND METHOD FOR PLUGGABLE OPTICAL MODULES FOR PASSIVE OPTICAL NETWORKS

CROSS-REFERENCE TO RELATED APPLICATIONS

This application is filed under 37 C.F.R. §1.53(b)(1) as a continuation claiming the benefit under 35 U.S.C. §120 of the pending patent application Ser. No. 10/886,514, "COMMUNICATION SYSTEM AND METHOD FOR AN OPTICAL LOCAL AREA NETWORK", which was filed by the same inventors on Jul. 6, 2004, now U.S. Pat. No. 7,925,162 claiming the benefit under 35 U.S.C. §119(e) of U.S. Provisional Patent Application No. 60/485,072 filed on Jul. 3, 2003, incorporated herein by reference, and U.S. Provisional Patent Application No. 60/515,836 filed on Oct. 30, 2003, incorporated herein by reference.

FIELD OF THE INVENTION

The present invention relates to optical fiber networks.

BACKGROUND OF THE INVENTION

A local-area network (LAN) is a computer network that spans a relatively small area. Most LANs are confined to a single building or group of buildings. However, one LAN can be connected to other LANs over any distance often spanning an area greater than either LAN via telephone lines, coaxial cable, optical fiber, free-space optics and radio waves. A system of LANs connected in this way is commonly referred to as a wide-area network (WAN).

Optical modules are used in applications requiring digital optical transmission such as SONET/SDH, 10 Gigabit Ethernet, Fibre Channel and DWDM running across metro access networks, wide area networks, access networks, storage area networks, and local area networks.

Optical modules integrate components used in the transmission and reception of optical signals into a single packaged subsystem. Makers of optical networking systems find optical modules attractive, because the highly integrated packaging approach can cut several months of system development and manufacturing time, consume less power and increase port densities over board-level solutions built from discrete components. But with so much functionality in one module, timely and sufficient component supply becomes even more essential for successful system delivery. Multi-source agreement (MSA) developed so systems vendors can feel more confident about getting the components they need and being able to incorporate them without costly and time-consuming system redesigns. Further with MSA, system vendors can concentrate on system architecture and not optical research and development. Optical modules can be purchased off the shelf from a choice of several suppliers.

A typical optical module **1100**, as shown in FIG. **11**, is composed of a: laser **1101**; laser driver (LD) **1102**; photo detector (PD) **1103**; transimpedance amplifier (TIA) **1104**; limiting amplifier (LA) **1105** and sometimes physical-layer devices **1108** such as a mux/demux with associated clock multiplier unit (CMU) and clock data recovery (CDR) functions in a serializer **1109** and deserializer **1110**. A typical optical module **1100** has dual optical fibers for reception **1106** and transmission **1107** of signals and can have serial or parallel input **1111** and output **1112** pins. Optical modules have several levels of integration as shown in FIG. **12**. Optical modules that contain only the optical-electrical and electrical-optical (o-e/e-o) components **1204**, such as a laser and photo detector, are labeled discrete **1202**. Optical modules that contain (o-e/e-o) **1204** and hi speed integrated circuits **1205** such as LD, TIA and LA are called transceivers **1201**. Optical modules that contain (o-e/e-o) **1204**, hi speed integrated circuits **1205** and Mux/Demux devices **1206** are called transponders **1200**. Mux/Demux **1206** devices contain CDR and CMUs. Optical modules are ultimately connected with various interfaces to Framers and Media Access Control (MAC) devices **1207** as shown in FIG. **12**.

In FIG. **13**, the evolution of MSA 10 Gb/s optical modules is shown. Beginning with discrete components, followed by 300pin, XENPAK, X2, and XPAK transponders and finally with XFP transceivers. The evolution of optical modules has been to reduce the size, power, and number of components in optical modules for the purpose of increasing port densities. The very nature of the intent of the invention is contrary to the evolution of MSA 10 Gb/s optical modules in that an increase in power and number of components result while enabling point-to-multipoint networks.

SUMMARY OF THE INVENTION

In general, in one aspect, the invention includes a method for broadcasting data including receiving an incoming optical signal at a first port of a plurality of ports; converting the received incoming optical signal to an electrical signal; processing the electrical signal; converting the processed electrical signal to a broadcast optical signal; and coupling the broadcast optical signal to each of the plurality of ports.

Aspects of the invention may include one or more of the following features. Processing the electrical signal includes coupling the electrical signal to a device that processes the electrical signal according to an OSI layer-2 protocol. Processing the electrical signal includes coupling the electrical signal to a device that processes the electrical signal according to an OSI layer-3 protocol. The method further **30** includes converting an electrical client signal to the incoming optical signal. The method further includes adapting the electrical client signal from a signal conforming to an OSI layer-2 protocol. The OSI layer-2 protocol includes a media access control protocol. The media access control protocol is Ethernet or Fibre Channel. The method further includes transmitting the incoming optical signal from a network client adapter to one of the plurality of ports over an optical distribution fabric. The method further includes transmitting the broadcast optical signal from one of the plurality of ports over an optical distribution fabric; and receiving the broadcast optical signal at network client adapters in a plurality of clients. The method further includes converting the received broadcast optical signal to a second electrical signal in at least one of the clients. The method further includes selecting a frame within the second electrical signal associated with the network client adapter and adapting data in the selected frame for transmission over a network interface.

In general, in another aspect, the invention includes an apparatus including a plurality of ports; a passive optical coupler coupled to each of the plurality of ports; an optical-electrical converter in optical communication with the passive optical coupler; and a control module in electrical communication with the optical-electrical converter for scheduling slots for incoming and outgoing signals over the plurality of ports.

Aspects of the invention may include one or more of the following features. The control module is operable to schedule a slot for receiving a signal over one of the plurality of ports and to schedule a slot for broadcasting a signal over each

of the plurality of ports. The apparatus includes only a single optical-electrical converter in optical communication with the passive optical coupler. The control module is coupled to a device that is operable to process an electrical signal provided by the optical-electrical converter according to an OSI layer-2 protocol. The control module is coupled to a device that is operable to process an electrical signal provided by the optical-electrical converter according to an OSI layer-3 protocol.

In general, in another aspect, the invention includes an optical local area network including a plurality of optical waveguides; a network manager that includes an optical-electrical converter in optical communication with the plurality of optical waveguides; and a control module in electrical communication with the optical-electrical converter for scheduling slots for incoming and outgoing signals transmitted over the plurality of optical waveguides; and a plurality of network client adapters coupled to the plurality of optical waveguides, each network client adapter including an optical-electrical converter for processing transmitted and received optical signals at a client.

Aspects of the invention may include one or more of the following features. The optical local area network further includes a passive optical coupler coupled to each of the plurality of optical waveguides. The network manager further includes a passive optical coupler coupled to each of the plurality of optical waveguides. The control module is operable to schedule a slot for receiving a signal over one of the plurality of optical waveguides and to schedule a slot for broadcasting a signal over each of the plurality of optical waveguides. The control module is operable to dynamically schedule a slot for receiving a signal over one of the plurality of optical waveguides in response to a message from one of the network client adapters. The control module is operable to determine a response delay between the optical-electrical converter and one of the network client adapters. The control module is coupled to a device that is operable to process an electrical signal provided by the optical-electrical converter according to an OSI layer-2 protocol. The control module is coupled to a device that is operable to process an electrical signal provided by the optical-electrical converter according to an OSI layer-3 protocol. Each of the network client adapters is operable to convert an electrical client signal to an optical signal for transmission over one of the optical waveguides. Each of the network client adapters is operable to adapt the client signal from a signal conforming to an OSI layer-2 protocol. The OSI layer-2 protocol includes a media access control protocol. The media access control protocol used by a network client adapter is Ethernet or Fibre Channel. Each of the network client adapters is operable to convert a received optical signal to an electrical signal. Each network client adapter is operable to select a frame within the electrical signal associated with the network client adapter. The optical local area network further includes a client that includes a network interface card, the network interface card including one of the network client adapters. The client is selected from the group consisting of a workstation, a personal computer, a disk storage array, a server, a switch, and a router.

In general, in another aspect, the invention includes an optical local area network including a passive optical distribution fabric interconnecting a plurality of nodes including a first node and a plurality of remaining nodes; a hub that includes the first node and a control module; and a client network adapter coupled to each of the remaining nodes for responding to the control module; wherein the control module controls timing for each of the client network adapters to transmit signals over the passive optical distribution fabric and distribution of signals to each of the nodes.

Aspects of the invention may include one or more of the following features. The control module is operable to schedule a slot for receiving a signal from one of the remaining nodes and to schedule a slot for broadcasting a signal to each of the remaining nodes. The control module is operable to dynamically schedule a slot for receiving a signal from one of the remaining nodes in response to a message from one of the network client adapters. The control module is operable to determine a response delay between the hub and one of the network client adapters. The control module is coupled to a device that is operable to process signals according to an OSI layer-2 protocol. The control module is coupled to a device that is operable to process signals according to an OSI layer-3 protocol. Each of the network client adapters is operable to convert an electrical signal to an optical signal for transmission over the passive optical transmission fabric. Each of the network client adapters is operable to adapt a signal conforming to an OSI layer-2 protocol. The OSI layer-2 protocol includes a media access control protocol. The media access control protocol used by a network client adapter is Ethernet or Fibre Channel. Each of the network client adapters is operable to convert a received optical signal to an electrical signal. Each network client adapter is operable to select a frame within the electrical signal associated with the network client adapter. The optical local area network further includes a client that includes a network interface card, the network interface card including one of the network client adapters. The client is selected from the group consisting of a workstation, a personal computer, a disk storage array, a server, a switch, and a router.

In general, in another aspect, the invention includes an optical local area network including a hub; a plurality of external nodes interconnected by a passive optical distribution fabric, wherein the external nodes are located external to the hub, and the hub is operable to control traffic across all nodes; adaptors at each external node responsive to hub instruction; and an interface coupled to the hub coupling signals received from any individual external node for distribution to all external nodes.

Aspects of the invention may include one or more of the following features. The hub includes an internal node coupled to the passive optical distribution fabric. The hub is operable to measure response delay between the hub and external nodes. The hub is operable to allocate slots for external nodes dynamically. Slot allocations are made to guarantee external nodes have a minimum bandwidth. The optical local area network further includes splitters coupled between the hub and external nodes. Traffic arriving at one or more external nodes includes Ethernet traffic. Traffic arriving at one or more external nodes includes Fibre channel traffic. The hub includes an optical module. At least one of the external nodes is located within an optical module external to the hub.

Implementations of the invention may include one or more of the following advantages. A network manager in an optical local area network can provide switching functions of a hub, a switch or a router. A switch configuration in which network managers are aggregated enables a high performance network in a compact apparatus. Connectivity of network managers and network client adapters to existing conventional routers and switches using industry standard form factor optical modules enables a high performance network upgrade with minimal new equipment. A network client switch can support multiple physical layer ports without necessarily requiring a Layer-2 MAC or switching elements and the associated routing tables and packet memory. The number of

optical transceivers and switching elements used to sustain the same number of computing nodes in a LAN via a point-to-multipoint optically coupled network configuration is reduced, thus saving the majority of expense described above.

Aspects of an embodiment of the invention includes enabling Media Access Control (MAC), Transmission Convergence Layer (TC-Layer) and Physical Layer (PHY-Layer) functionality via a plurality of discrete electronic components in an optical module, which can interface to existing Physical Media Attachment (PMA) layer devices or to devices via the Media Independent Interface (MII). This enables a consolidation of a plurality of network equipment layers resulting in cost savings.

BRIEF DESCRIPTION OF THE DRAWINGS

FIG. **1** is a block diagram of an optical local area network.

FIGS. **2**, **3**A and **3**B are schematic diagrams showing frame structures.

FIG. **4** is a flowchart for a network operating process.

FIG. **5** is a flowchart for a response delay process.

FIGS. **6**A - **6**C are diagrams of optical local area networks utilizing a hub configuration.

FIGS. **7** A-**7**D are diagrams of optical local area networks utilizing a switch configuration.

FIG. **8** is a diagram of an optical local area network.

FIGS. **9** and **10** are block diagrams of switches.

FIG. **11** is a diagram representing a typical optical module and components.

FIG. **12** is a diagram illustrating the basic components of transponder, transceiver and discrete optical modules.

FIG. **13** illustrates the evolutionary history of 10 Gb/s optical modules.

FIG. **14** is a diagram of an optical module with MAC, TC-Layer and PHY-Layer components according to an exemplary embodiment of the invention.

FIG. **15** is an illustration of the location of the invention in the Ethernet OSI model according to an exemplary embodiment of the invention.

FIG. **16** is an illustration of the location of the invention in the Fiber Channel model structure according to an exemplary embodiment of the invention.

FIG. **17** is a diagram of an optical module according to an exemplary embodiment of the invention.

DETAILED DESCRIPTION

Reference will now be made in detail to various embodiments of the invention, examples of which are illustrated in the accompanying drawings. While the invention will be described in conjunction with these embodiments, it will be understood that they are not intended to limit the invention to these embodiments. On the contrary, the invention is intended to cover alternatives, modifications and equivalents, which may be included within the spirit and scope of the invention as defined by the appended claims. Furthermore, in the following description of the present invention, numerous specific details are set forth in order to provide a thorough understanding of the present invention. In other instances, well-known methods, procedures, components, and circuits have not been described in detail as not to unnecessarily obscure aspects of the present invention.

Referring to FIG. **1**, a high-level schematic of an optical local area network **50** includes a network manager (NM) **100** at the head end of a passive optical distribution fabric (ODF) **102**. The NM **100** acts as a central transmission point and an overall controlling device for the optical local area network **50**. On another end, the ODF **102** is terminated by a plurality of (in one implementation, generally similar) network client adapters (NCAs) **104**A, **104**B, **104**C. Herein the NCA **104**A, NCA **104**B, NCA **104**C, are also referred to collectively as NCAs **104**. Though three NCAs **104** are shown more or fewer NCAs may be included in the optical local area network **50**.

The NM **100** transmits/receives data to/from the NCAs **104** in the form of modulated optical light signals of known wavelength through the ODF **102**. The transmission mode of the data sent over the ODF **102** may be continuous, burst or both burst and continuous modes. Both NM **100** and NCAs **104** may transmit light signals having a same wavelength. In one implementation, the light signals are polarized and the polarization of light transmitted by the NM **100** is perpendicular to the polarization of the light transmitted by the NCAs **104**. Alternatively, the transmissions can be made in accordance with a time-division multiplexing scheme or similar protocol.

In another implementation, bi-directional wavelength-division multiplexing (WDM) may be used. Bi-directional WDM is herein defined as any technique by which two optical signals having different wavelengths may be simultaneously transmitted bi-directionally with one wavelength used in each direction over a single fiber. In yet another implementation, bi-directional dense wavelength division multiplexing (DWDM) may be used. Bi-directional DWDM is herein defined as any technique by which more than two optical signals having different wavelengths may be simultaneously transmitted bi-directionally with more than one wavelength used in each direction over a single fiber with each wavelength unique to a direction. For example, if bi-directional WDM is used, the NM **100** may transmit data to an NCA **104**A,

104B, **104**C utilizing a first wavelength of modulated light conveyed via a fiber **105**A, **105**B, **105**C, respectively, in the ODF **102** and, similarly, the NCAs **104**A, **104**B, **104**C may transmit data via the same fiber **105**A, **105**B, **105**C, respectively, in the ODF **102** to the NM **100** utilizing a second wavelength of modulated light. Because only a single fiber is used (e.g., between the NM **100** and each respective NCA **104**), this type of transmission system is commonly referred to as a bi-directional transmission system. Although the optical local area network **50** illustrated in FIG. **1** includes an NM **100** in communication with a plurality of NCAs **104** using a plurality of fibers, other implementations of optical local area networks **50** may be used. In some implementations, the NCAs **104** are generally similar. In other implementations, the NCAs **104** may differ in one or more aspects.

The NM **100** includes network management communication logic and memory (NM-CLM) **106** block, a network management optical interface (NM Optical Interface) **108** block and an optical distribution fabric interface (ODF Interface) **110** block. The NM-CLM **106** includes a network manager engine (NM Engine) **112** block, a transmit framer (Tx Framer) **114** block and a receive framer (Rx Framer) **115** block.

The NM Engine **112** is a control module that performs various processing and scheduling functions of an NM **100**. The Tx Framer **114** frames outgoing data from the NM Engine **112** in accordance with a framing protocol that is in-use. The Rx Framer **115** receives incoming frames and recovers appropriate data and messages to pass on to the NM Engine **112**. The NM Optical Interface **108** is controlled by the NM-CLM **106** using, for example, bus **109**. The NM Optical Interface **108** converts electrical signals carrying data from the Tx Framer **114** to optical signals, for example, by modulating a laser (not shown) included in the NM Optical Interface **108** and transmitting the laser output to the ODF

interface **110**. The NM Optical Interface **108** also receives optical signals from the ODF interface **110** and converts the optical signals to electrical signals carrying data that is then transferred to the Rx Framer **115**. Thus, the NM Optical Interface **108** functions as an "optical-electrical converter" that can convert a signal from an optical signal to electrical signal or from an electrical signal to an optical signal.

The ODP Interface **110** includes an optical splitter **116** and a plurality of ODF Ports **117**A, **117**B, **117**C, etc. For example, the optical splitter **116** can be a 1:n splitter (where n is at least 2) that splits light coming from the NM Optical Interface **108** into n portions of light coupled into n optical ports, respectively. The optical ports (e.g., ODP Ports **117**) can be coupled to one or more optical waveguides. In one implementation, each ODP Port **117** is coupled to an optical waveguide. The optical waveguides can be, for example, single mode or multimode fibers that guide received/transmitted light to/from respective ODP Ports **117**A, **117**B, **117**C, etc. The 1:n splitter (or equivalently, n:1 combiner) also directs light from any of the ODP Ports **117**A, **117**B, **117**C, etc. received over one of the optical waveguides to the NM Optical Interface **108**. ODP Ports **117**A, **117**B, **117**C, etc. include optical fiber connector sockets (e.g., SC, LC, PC, ST, or MU connector sockets) for coupling to the optical waveguides.

The ODP **102** can include any of a variety of passive optical components including optical fibers (e.g., single mode fibers, multimode fibers), optical connectors, fiber splices, passive branching components (e.g., passive splitters) and passive optical attenuators.

In this implementation, the NCAs **104** each include a network client communication logic and memory (NC-CLM) **120** block, a network client optical interface (NC Optical Interface) **122** block and an ODP port **124**. The NC-CLM **120** block includes an Adaptation Unit **126** block, a network client engine (NC Engine) **128** block, a transmit framer (Framer) **130** block and a receiver framer (Deframer) **131** block. The NC Engine **128** is a control module that performs various functions associated with an NCA **104**, such as responding to messages from the NM **100**. The Framer **130** frames outgoing data from the NC Engine **128** in accordance with a framing protocol that is in-use. The Deframer **131** receives incoming frames and recovers appropriate data and messages to pass on to the NC Engine **128**. The adaptation unit **126** receives and transmits data and messages in the form of frames, packets or cells according to one or more external protocol(s). External controls, data and messages can be received using the network interface **136**. The responsibilities of the adaptation unit **126** may include providing buffering, data and/or message filtering and translation between the external protocol(s) and the protocol of the optical local area network **50**. The adaptation Unit **126** includes egress queue **132** block and ingress queue **133** block. Egress and ingress queues **132**, **133** can be of the form of memory and are used for buffering receive and transmit data and messages, respectively. The adaptation unit **126** can filter out or drop data and/or messages that are not intended to egress through its network interface **136**. Filtering can be based on the destination address of the data and/or messages according to the external protocol in-use. Additionally, the adaptation unit **126** can filter out or drop data and/or messages that are not intended to ingress through its network interface **136**. Filtering can be based on equal values for the source and destination addresses of the data and/or messages according to the external protocol in-use. The NC Optical Interface **122** is controlled by the NC-CLM **128** using bus **134**. The NC Optical Interface **122** converts electrical signals carrying data from the Framer **130** block to optical signals, for example, by modulating a laser (not shown) included in the NC Optical Interface **122** and transmitting the laser output to the ODF port **124**. The NC Optical Interface **122** also receives optical signals from the ODF port **124** and converts the optical signals to electrical signals carrying data that is then transferred to the Deframer **131** block. The ODF port **124** includes an optical fiber connector socket (e.g., an SC, LC, FC ST, or MU connector socket).

The NCAs **104** can be coupled to data link layer devices (not shown) or physical layer devices (not shown) using network interface **136**. The data link layer devices and physical layer devices are network devices that operate at a Layer-2 or Layer-1 respectively, according to the Open Systems Interconnect (OSI) 7-layer reference model. Furthermore, these network devices may comply with industry standard specifications such as IEEE 802.3 and Fibre Channel (incorporated herein by reference). Consequently, the network interface **136** may be an MII, GMII, XGMII, XAUI or SPI type interface. Other Layer-2 and Layer-1 type interface specifications may also be used.

The optical local area network **50** transfers data between an NM **100** and the NCAs **104** in the form of downstream frames (NM **100** to NCAs **104**) and upstream "virtual frames" (NCAs **100** to NM **104**). Downstream frames from the NM **100** are transmitted into the ODF **102** in an essentially continuous sequence of constant period frames. In one implementation, downstream frames have a period of 125 μs, and transfer data downstream at a rate of approximately 10 Gb/s, although other periods and rates may be used. The ODP Interface **110** and potentially the ODF **102** split the downstream transmissions passively so that all NCAs **104** receive the frames in a generally broadcast manner. In the upstream direction, separate transmissions from the plurality of NCAs **104** are transmitted as burst transmissions or in slots which are combined in a virtual frame so that the separate burst transmissions do not collide when they arrive at the NM **100**. In one implementation, the virtual upstream frames have essentially the same period as the downstream frames, and upstream data transmissions are transmitted at a rate approximately equal to the downstream rate. Alternatively, different upstream and downstream rates may be used.

FIG. **2** is a schematic timing and framing diagram, showing overall structure of a downstream frame **200**, and a virtual upstream frame **202** in an implementation of a framing protocol. Referring now to FIGS. **1** and **2**, each downstream frame **200** includes a header **204** and a payload section **206**. The downstream header **204** includes a downstream synchronization (DS Sync) **208** section, a station management **210** section, two sections containing the number of NCAs **104** in communication with the NM **100** (# of NCAs) **212**, **214** and an upstream slot allocation (US slot allocation) **216** section. The DS Sync **208** section includes a consecutive sequence of bits that enables receiving NCAs **104** to identify a beginning of the downstream frame **200** and thus acts as starting marker for frame timing throughout the optical local area network **50**. The number of NCAs **104** in communication with the NM is sent twice **212**, **214** to ensure correct interpretation of the US slot allocation section **216**. The order of downstream header sections **210**, **212**, **214**, **216** after a DS Sync **208** may differ in other implementations.

During each network period **218** defined by respective adjacent downstream headers, each NCA **104** is able to send upstream data. The virtual upstream frame **202** is partitioned into slots, where a "slot" corresponds to a fixed number of bits or a fixed length of time within a virtual frame. For each network period **218**, the NM **100** allocates each NCA **104** respective slots within which an NCA is able to transmit data upstream. Each slot allocation includes a start slot number

and end slot number (also referred to as start time and end time), relative to the starting marker defined by a DS Sync **208** from the next network period after an NCA **104** receives a slot allocation. In alternative implementations, a start slot number and a length of time during which a specific NCA **104** is permitted to transmit may be sent instead of a start slot number and an end slot number. Slot allocation start and end numbers are allocated within the virtual upstream frame so that slot allocations do not overlap, ensuring that there are no collisions of data from different NCAs **104** at the NM **100**. The allocations can be determined by the NM Engine **112** based on total upstream bandwidth requests and can be communicated to NCAs **104** in the downstream frame US slot allocation **216** section. The US slot allocation **216** section includes start and end slot numbers pertaining to and identified to specific NCAs **104** (as shown in **220** and **222**). Slot allocations assigned to NCAs **104** can be dynamic and may be changed from network period to network period.

The upstream frame **224** includes header **226** and payload **228** sections. The header **226** includes a preamble **230** section, a frame delimiter (Delimiter) **232** section and a station management **234** section. The preamble **230** section includes a consecutive sequence of bits designed to aid an NM **100** in synchronizing to the bit clock of a respective transmitting NCA **104**. The Delimiter **232** includes a consecutive sequence of bits designed to aid an NM **100** in synchronizing to and recognizing the beginning of an upstream frame **224**.

Each downstream frame **200** and upstream frame **224** includes a payload section **206**,**228** respectively, in which data to and from NCAs **104** (from the network interface **136**) are transferred. FIG. **3**A is a schematic showing the payload in downstream and upstream framing, showing that the payload of both upstream and downstream may contain a single adaptation data unit (ADU) **300**. ADUs **300** are output units of data from an adaptation unit **126**, where the adaptation unit **126** has processed data received from the network interface **136** for transfer across the optical local network **50**. For example, in one implementation the adaptation unit **126** receives Ethernet media access control frames (MAC frames) via a GMII interface (as an implementation for the network interface **136**) and removes the MAC frame's preamble and start of frame delimiter (SFD) fields with the remaining fields of the MAC frame encapsulated in an ADU **300**. Additionally, in one implementation the adaptation unit **126** receives Fibre Channel (FC) FC-2 frames through a serial interface (as an implementation of the network interface **136**) and removes the FC-2 frame's start of frame and end of frame fields, with the remaining fields of the FC-2 frame encapsulated in an ADD **300**.

In another example, the adaptation unit **126** can receive IEEE 802.3 MAC frames via a GMII interface and form an ADD **300** with the entire MAC frame included (i.e., encapsulate the entire MAC frame). In yet another example, the adaptation unit **126** can receive FC-2 frames through a serial interface (as an implementation for the network interface **136**) and form an ADD **300** with the entire FC-2 frame included (i.e., encapsulate the entire FC-2 frame).

In one implementation, the payload **204**, **232** of downstream frames **200** and upstream frames **224** may include multiple consecutive sub-frames. Referring to FIGS. **1** and **3**B, a sub-frame includes a sub-frame header **302** section and a sub-frame payload **304** section. A sub-frame header **302** section includes a payload length indicator (PLI) **308** and cyclic redundancy check (CRC) **310** section that covers the PLI **308**. CRC sections, although not shown, may be used in the downstream **200** and upstream **224** frames as well. The sub-frame payload **304** section includes a type **312** section, a CRC **314** that relates to the type **312** section, a payload data unit (PDU) **316** and optionally a CRC **318** that relates to the PDD **316**. The PLI **308** gives an indication of the length, e.g., in bits, of the sub-frame payload **304** section immediately following the sub-frame header **302**. The type **312** section gives an indication of the type of data in the PDU **316**. An adaptation unit **126** may receive data from a mixture of protocols essentially simultaneously (as described below) and the use of sub-frames allows the data to be transferred across the network ensuring quality of service or class of service. An adaptation unit **126** uses sub-frames by placing received data in the PDU **316**, indicating the type of data received in the type **312** section and entering the length of the sub-frame payload **304** in the PLI **308** section.

The optical local area network **50** operates according to an exemplary process illustrated in FIG. **4**. Referring now to FIGS. **1** and **4**, after an NM **100** is powered on **400**, the NM **100** sends out **402** one or more message(s) requesting new NCAs **104** (NCAs **104** that the NM **100** is unaware of) to identify themselves by reporting to the NM **100** with their respective serial number. The NM **100** also sends out **402** network parameters including initial NCA transmit power levels using, for example, a station management message(s). The NCAs **104** respond using slot allocation(s) given by the NM **100** for new NCAs **104** to respond. After successfully receiving new NCA serial numbers, the NM **100** assigns each new NCA **104** a network identification number (NC-ID) and requests **404** the new NCA **104** to adjust its transmitting power level. In one implementation, the NM **100** sends these requests in a station management message. The respective new NCAs **104** use the assigned NC-ID to interpret specific messages of concern (i.e., addressed) to a given NCA **104**. The NM **100** initiates **406** a response delay process to determine the delay in responses between the new NCA and the NM **100**. After performing **419** the response delay process, the NM **100** enters normal operation in which network data is transmitted and received **408** across the optical local area network **50**.

When an NCA **104** is powered on **410**, the NCA **104** attempts to synchronize **412** to downstream frames by searching for the DS Sync **208**. After successful downstream synchronization, the NCA **104** interprets **414** network parameters received via downstream station management messages **404**, adjusts its initial transmit power level and awaits instructions (e.g., a message) for new NCAs **104**. The instructions include a slot allocation for new NCAs **104** to respond **416** to the NM **100** with the NCA's **104** serial number. Once the NCA **104** has sent its serial number the NCA **104** is then assigned an NC-ID by the NM **100**. The NCA **104** then enters a waiting loop (e.g., for a station management message from the NM **100** to adjust its transmit power level). In response to a request to set transmit power level, the NCA **104** adjusts the transmit power level **418**. The NCA **104** then enters a waiting loop again (e.g., until receipt of a message from the NM **100** to initiate a response delay process). Upon receipt of an instruction to begin a response delay process, the NCA **104** can, in cooperation with the NM **100**, determine the delay between the respective network elements (not shown as part of the process flow). The details of the response delay process are described in greater detail below. After the NCA **104** and NM **100** complete the response delay process, the NCA **104** may adjust **420** its alignment with the network period to account for downstream and upstream transmission delay. The NCA **104** then enters its normal operation state in which network data is received and transmitted **422**.

FIG. **5** shows one implementation for executing a response delay process **500**. The response delay process **500**, is a

process to determine the delay in NM downstream transmission to NM upstream reception of a message or network data transmission. Referring now to FIGS. **1**, **2** and **5**, the NM **100** starts **501** the delay process with a new NCA **104** or with an NCA **104** that may cause upstream transmission collisions. The NM **100** assigns one or more slot(s) to the target NCA **104** (i.e., the new NCA or one NCA that may cause a collision in upstream communication) to respond with a response delay message. The NM **100** generates **502** a silence period in the upstream virtual frame **202** (e.g., by not assigning or granting any slots for that period) around the slot(s) assigned to the target NCA **104**. The silence period ensures no upstream collisions will occur. The NM **100** sends **504** a message to the NCA **104** to respond with a response delay message and informs the NCA **104** of its slot(s) assignment to respond. Thereafter, the NCA **104** responds **506** to the NM **100** at the appropriate slot time. The NM **100** receives the NCA **104** response delay message and calculates **508** the transmission delay. In one implementation, the NM **100** transmits **510**, the result of the response delay calculation to the NCA **104** and the NCA **104** aligns **512** itself to the proper network period.

The NM **100** may assign, schedule or grant slot allocations in a number of ways (e.g. according to fixed time-division multiplex or statistical time-division multiplex schemes). In one implementation the slot allocations are scheduled to give the NCs **104** a guaranteed minimum upstream transfer rate. The rate may be determined by dividing the maximum upstream data rate by the number of NCAs **104**. In another implementation, the NM **100** receives status information about the NCAs **104** egress **132** and ingress **133** queue status. The NM **100** can schedule slot allocations that best minimize the depth of the egress **132** and ingress **133** queues to minimize transmission delays ensuring quality of service (QOS) or class of service (COS).

FIGS. **6**A-**6**C, **7**A-**7**C and **8** are illustrations of implementations of the optical local area network **50**. In one implementation shown in FIG. **6**A, an NM **100** may function in a hub configuration **600** networking clients including workstations **602**, personal computers (PC) **604** and Ethernet switches **618** together using the Ethernet protocol. The workstations **602** and PCs **604** are connected to the hub configuration **600** with a network interface card (NIC) **606** containing an NCA **104** and a NIC controller **608**. In one implementation of the NIC **606**, the NIC controller **608** includes a GMII interface, an Ethernet MAC and a peripheral component interconnect (PCI) bus interface. The NCA **104** communicates to the NIC controller **608** through the GMII interface. Ethernet switches **618** are connected to the hub configuration **600** with a network adaptor **621**A containing an NCA **104**. Ethernet switches **618** can be conventional Ethernet switches. In one implementation of the network adaptor **621**A, the network interface **136** is a GMII interface.

In another implementation shown in FIG. **6**B, the hub configuration **600** can network disk storage array devices **612**, servers **614** and FC switches **619** together using the Fibre Channel (FC) protocol. This implementation may be described as a Storage Area Network (SAN). The disk storage array devices **612** and servers **614** are connected to the hub configuration **600** with a host bust adaptor (HBA) **607**. In one implementation of HBA **607**, the HBA controller **609** includes a serial interface, FC controller and a PCI bus interface. FC switches **619** are connected to the hub configuration **600** with a network adaptor **621**B containing an NCA **104**. FC switches **619** can be conventional FC switches. In one implementation of the network adaptor **621**B, the network interface **136** is a serial interface.

In yet another implementation of the optical local area network **50** shown in FIG. **6**C, the hub configuration **600** may network clients such as workstations **602**, PCs **604**, disk storage array devices **612**, servers **614** and switches **618**, **619** (FIG. **6**B) using both Ethernet and FC protocols concurrently. NICs **606** can connect a particular client to the hub configuration **600** using the Ethernet protocol. HBAs **607** can connect a particular client to the hub configuration **600** using the FC protocol. For example, workstations **602**, PCs **604** and switches **618** can communicate with the hub configuration **600** using Ethernet protocol while disk storage array devices **612** and servers **614** can communicate with the hub configuration **600** using FC protocol. The ODF **102** (not shown) of the optical local area network **50** can include splitters **620**. Hub configuration **600** can also connect to a switch **618** using an adaptor card **621**A. Adaptor card **621**A includes an NCA **104** with a respective network interface **136** (e.g., GMII, XAUI, Serial). Switch **618** may be, for example, a switch in a conventional Ethernet LAN **622**.

One or more NMs **100** can interface to a switching device (e.g., a Layer-2 switch or a Layer-3 switch) to process frames from the various NCAs **104** according to a communication protocol of the switching device. Referring to FIG. **7**A, a switch configuration **704** includes multiple NMs **100**A, **100**B, **100**C in communication with a Layer-2 switch device **700** which is in further communication with an uplink port **702**. In alternative implementations, the Layer-2 switch device **700** may be in communication with a plurality of uplink ports (not shown). Though three NMs **100**A, **100**B, **100**C are shown more or fewer NMs **100** may be in communication with a Layer-2 switch device **700** included in the switch configuration **704**. Each NM **100**A, **100**B, **100**C includes an adaptation unit **706** in communication with a NM Engine (not shown). The adaptation unit **706** receives and transmits data and messages in the form of frames, packets or cells according to the Layer-2 switch device **700** via a switch interface **708**. Adaptation unit **706** can provide buffering, data and/or message filtering and translation between the protocol of the Layer-2 switch device **700** and the protocol of the optical local area network **50**. The adaptation unit **706** includes an egress queue block (not shown) and an ingress queue block (not shown). Egress and ingress queues can be of the form of memory and are used for buffering receive and transmit data and messages, respectively. In one implementation of the NMs **100**A, **100**B, **100**C, all upstream traffic received by an NM **100** is passed through the switch interface **708** to the Layer-2 switch device **700**. All downstream traffic transmitted by an NM **100** is received by the NM **100** through the switch interface **708**. In another implementation upstream traffic received by an NM **100** can be filtered based on destination address to either pass data and/or messages back to one or more NCAs **104** multiplexed in downstream traffic (e.g. hairpinning) or to the Layer-2 switch device **700** through the switch interface **708**. The fiber connections **105** form a first ODF for connecting NM **100**A with one or more NCAs. The fiber connections **710** form a second ODF for connecting NM **100**B with one or more NCAs. The fiber connections **712** form a third ODF for connecting NM **100**C with one or more NCAs.

In one implementation of an optical local area network **50** shown in FIG. **7**A, the switch configuration **704** is used to network workstations **602**, PCs **604** and a Ethernet switch **618** together using the Ethernet protocol with appropriate NICs **606** as described above. The switch configuration **704** includes a Layer-2 switch (e.g., Layer-2 switch device **700**) that implements an Ethernet MAC and switching functions. The optical fibers **105**, **710**, **712** connecting the workstations

602, PCs 604 and Ethernet switches 618 to the switch configuration 704 can be associated with different NMs 100A, 100B, 100C depending on which fiber connections are used. The uplink port 702 of switch configuration 704 can connect to an Ethernet switch and/or router (not shown).

In another implementation of an optical local area network 50 shown in FIG. 7B, the switch configuration 704 is used to network one or more disk storage array devices 612, servers 614 and FC-2 switches 619 using, for example, the FC protocol with appropriate HBAs 607 as described above. This implementation may also be described as a Storage Area Network (SAN). The switch configuration 704 includes a Layer-2 switch (e.g., Layer-2 switch device 700) that implements an FC-2 controller and switching functions. The optical fibers 105, 710, 712 connecting the disk storage array devices 612, servers 614 and FC-2 switch 619 to the switch configuration 704 can be associated with different NMs 100A, 100B, 100C depending on which fiber connections are used. The uplink port 702 of switch configuration 704 may connect to an FC-2 switch and/or router (not shown). FC-2 switches 619 can be a conventional FC-2 switch.

In yet another implementation of an optical local area network 50 shown in FIG. 7C, a switch configuration 704 is used to network workstations 602, PCs 604, disk storage array devices 612, servers 614 and other switches (e.g. an Ethernet switch 618) together using, for example, both Ethernet and FC protocols concurrently in a manner described previously. The switch configuration 704 includes a Layer-2 switch (e.g. Layer-2 switch device 700) that implements both an Ethernet MAC and FC-2 controller with switching functions. Layer-2 switch device 700 can be implemented by a packet processor or network processor. The optical fibers 105, 710, 712 connecting the workstations 602, PCs 604, disk storage array devices 612, servers 614 and t switches to the switch configuration 704 can be associated with different NMs 100A, 100B, 100C depending on which fiber connections are used. The uplink port 702 of switch configuration 704 may connect to an Ethernet or FC-2 switch and/or router (not shown).

In yet another implementation of an optical local area network 50, an implementation of switch configuration 705 containing an NM 100, an adaptation unit 706 and an uplink port 702 is shown in FIG. 7D. Switch configuration 705 can be used to network workstations 602, PCs 604 and other switches 618 in a manner described previously. The NM 100 is in communication with a Layer-2 switch device (not shown) through the uplink port 702 that is connected to a switch. The connection between uplink port 702 and switch 618 can be a physical layer connection 714 (e.g., 1000 BASE-SX, 1000 BASE-LX). Ethernet switch 618 can be a conventional Ethernet switch.

In some implementations of switch configurations 704, 705 the uplink port 702 can be an NCA adaptor (not shown) similar to 621A, 621B wherein the network interface 136 and switch interface 708 are coupled using the same interface standard (e.g., XAUI, Serial, Parallel), thus enabling the uplink port 702 to connect to other hub configurations 600 and switch configurations 704 (FIGS. 7A-7C), 705 (FIG. 7D).

In another implementation of an optical local area network 50 shown in FIG. 8, NM 100 and NCA 104 may be implemented in optical modules. A network manager in an optical module (NM-OM) 800 is provided that, in one implementation, conforms to an industry standard form factor and includes an NM-CLM 803 that includes an adaptation unit 706 to transfer data into and out of a network interface (e.g., switch interface 708). The NM-OM 800 also includes a NM Optical interface 108 and an ODF port 117A. In one implementation, the optical module NM-OM 800 conforms to an industry standard Multi-source agreement (MSA) form factor (e.g., 300pin, XENPAK, X2, XPAK, XFP or SFP). A network client adaptor in an optical module (NC-OM) 802 can be provided that, in one implementation, also conforms to an industry standard form factor and includes an NCA 104. For example, the optical module NC-OM may conform to an MSA form factor (e.g., 300pin, XENPAK, X2, XPAK, XFP or SFP).

The NM-OM 800 can connect to a conventional router 804 that has optical module ports 806 using the router's switch interface (e.g., XAUI or Serial). The NM-OM 800 is in optical communication with an optical splitter 810 that splits light among and collects light from workstations 602, PCs 604, disk storage array devices 612, servers 614 and switches using appropriate NICs 606 and/or NC-OM 802 as previously described. The Ethernet Layer-2/3 switch 808 may be of conventional design and include an uplink port, that in one implementation, conforms to an industry standard optical module form factor. The Ethernet Layer-2/3 switch 808 can communicate with the NM-OM 800 in router 804 by using an NC-OM 802 via network interface 136 (e.g., XAUI or Serial).

The Ethernet Layer-2/3 switch 808 is further detailed in FIG. 9. In the Ethernet Layer-2/3 switch 808, an NC-OM 802 is in communication with a Layer-2 switch 900 by means of a MAC (not shown) using a network interface 136 (e.g., XAUI or Serial). Ethernet Layer-2/3 switch 808 also includes physical layer ports (PHY ports) 902 that, in one implementation, form a conventional Ethernet LAN (e.g., Ethernet LAN 622 of FIG. 8) connecting network clients such as workstations 602 and PCs 604.

An implementation of an alternative configuration for a switch is shown in FIG. 10. FIG. 10 is an illustration of an NC-Switch 1010, in which no conventional Layer-2 switch and MAC is used. NC-Switch 1010 includes an NCA 1012 and multiple PHY ports 902. Each PHY port may perform wireline (e.g., 10/100/1000 BASE-T, DSL) or wireless (e.g., IEEE 802.11, IEEE 802.16) physical layer communications with conventional LAN clients. In this implementation, the adaptation unit 126 supports multiple network interfaces 136. The switching function previously performed by the Layer-2 switch (e.g., Layer-2 switch 900 of FIG. 9) is consolidated to the switch or router in communication with an NM 100 in a switch configuration 704 (as described above) or an NM-OM 800 (e.g. as illustrated in FIG. 8 an NC-Switch 910 in communication with an NM-OM 800). Alternatively, the switching function previously performed by the Layer-2 switch is consolidated to Layer-2 switches (not shown) in communication with other NCAs 104 networked in a hub configuration 600.

In hub configuration 600 (e.g. FIGS. 6A-6C) of the optical local area network 50, flow control, denial of service and other network administration functions are dependent on external Layer-2 devices in communication with NCAs 104 (for example, the Ethernet MAC or FC-2 controller in the NIC controller 608 dependent on the implementation as previously discussed). In switch configurations 704 (e.g. FIGS. 7A-7C) of the optical local area network 50, flow control, denial of service and other network administration functions are further dependent on the external Layer-2 device 700 in communication with NMs 100, in addition to the Layer-2 devices external and in communication with NCAs 104 as previously mentioned.

FIG. 14 is a diagram of an optical module 1400 with MAC, TC-Layer and PHY-Layer functionality components 1408 according to an exemplary embodiment of the invention. The

form factor of the optical module **1400** can comply with any current or future optical module form factor. The preferred embodiment of the invention would have a form factor that complies with an MSA optical module such as the XENPAK, X2, SFP and XFP MSA optical modules. The optical module **1400** contains the optical-electrical/electrical-optical components such as a laser **1401** and a photo detector **1403** as well as hi speed devices such as the laser driver **1402**, TIA **1404** and limiting amp **1405**. The MAC, TC-Layer and PHY-Layer functionality component(s) **1408** inside the optical module are the basis of the invention and are not to be confused with replacing the traditional MAC, TC-Layer and PHY-Layer devices that reside outside of optical modules. The MAC and TC-Layer comprise of functionality needed to generate and receive transmission frames and are responsible for the entire overhead associated with the transmission frame for a point-to-multipoint network. The invention is envisioned to enable point-to-multipoint connections in previously point-to-point only connections via passive optical network (PON) implementation. This implies a headend or Optical Line Terminal (OLT) MAC and TC-Layer, which must emulate the functionality of a point-to-point link and is the master of the point-to-multipoint link, with a complementary client or Optical Network Terminal (ONT) MAC and TC-Layer operating in a slave like relationship to the headend MAC & TC-Layer counterpart. The MAC performs the efficient arbitrating of downstream and upstream data by determining bandwidth allocation and packet destination on the point-to-multipoint network. The term TC-Layer originated with ATM protocol but has become and is used here to describe a specification that: bundles and unbundles sent and received data into packets or frames; manages the transmission of packets or frames on a network via medium access and bandwidth allocation; provides necessary messaging and end point behavior, and checks and corrects for errors. The PHY-Layer comprises the functionality of clock data recovery, analog to digital and digital to analog conversion. The preferred optical module embodiment would also contain a performance monitor **1413**, clock generator **1414** and a micro-controller **1415**. The performance monitor **1403** contains a photo diode and is used to monitor and correct the extinction ratio of the laser. The clock generator **1414** is a clock source for the various digital components in the preferred optical module embodiment **1400**. The micro-controller **1415** enables the optical module **1400** to communicate to an external intelligence the capabilities of the optical module **1400** as well as receive configuration commands from the external intelligence. The input **1411** and output **1412** of the optical module **1400** can be either serial or parallel pins depending on the type of network apparatus that the optical module **1400** is intended to be connected to.

The optical module **1400** can connect to a plurality of network apparatus according to an exemplary embodiment of this invention. Given today's network infrastructure the invention is preferred to connect to Ethernet and Fibre Channel networks. FIG. **15** is a diagram of the Ethernet OSI model. The embodiment of the invention connects to Ethernet devices at two levels in the OSI model, as Physical Coding Sublayer (PCS) layer **1502** and Physical Media Dependent (PMD) layer **1503** devices. The embodiment connects to Ethernet devices as the PCS layer **1502** via an xMII type interface, which is a generic term for 100 Mbit or higher Media Independence Interfaces. FIG. **16** is a diagram of the Fibre Channel model structure and the embodiment of the invention connects to Fibre Channel devices at two levels in this structure model, as FC-1 layer **1602** and FC-0 layer **1603** devices. The embodiment connects to Fibre Channel devices as the FC-1 layer **1602** via the interface specified by the Fibre Channel specification, which as recently adopted an xMII interface as well.

The embodiment connects to Ethernet devices as the PMD layer **1503** and Fibre Channel devices as the FC-0 layer **1603** via an MSA optical module port whereby the embodiment replaces an existing MSA optical module or is an outright substitute for traditional MSA optical modules. The embodiment in this case would have either serial or XAUI interface depending on the MSA form factor of the MSA optical module port. Furthermore, the embodiment in this case has the addition of 8/10 bit decode **1700** functionality as part of the MAC, as shown in FIG. **17**. Both Ethernet and Fibre channel employ 8/10 bit encoding at the PCS layer. In order for the MAC to perform its functions part of the incoming data must be decoded to determine the destination of the packet on the point-to-multipoint network. The data is preferred to be sent with the 8/10 bit encoding to reduce the burden of complete decoding and recoding at the destination. Although in particular embodiments 8/10 bit decoding **1700** and encoding **1701** can be desired and done.

Quality of Service (QoS) in network designs has never been as important as it is today. Manageable QoS needs to be available at all levels of a network, including LAN, WAN, campus networks, enterprise networks, and metropolitan networks. QoS management should be provided at all layers of the network protocol, or the QoS is only as good as the weakest link. QoS is usually implemented via Station Management interfaces with Management Information Base (MIB) table of registers to manipulate the network device. The embodiments of the invention enable a new level of QoS management at the PCS and PMD layers or the equivalent there of. QoS can be enabled via a Station Management interface with the micro-controller **1415** where the MIB resides.

Although the invention has been described in terms of particular implementations, one of ordinary skill in the art, in light of this teaching, can generate additional implementations and modifications without departing from the spirit of or exceeding the scope of the claimed invention. Accordingly, it is to be understood that the drawings and descriptions herein are proffered by way of example to facilitate comprehension of the invention and should not be construed to limit the scope thereof.

What is claimed is:

1. A network client optical transceiver module for a passive optical network, the passive optical network having one or more passive optical splitters for coupling the network client optical transceiver module over one or more optical fibers to the head end of the passive optical network and the network client optical transceiver module having a pluggable form factor and configured to removably couple to an optical module port of a switch or router, the network client optical transceiver module comprising:

an optical port configured to optically couple to one or more optical fibers of the passive optical network having one or more passive optical splitters;

a bi-directional optical interface block optically coupled to the optical port and configured to perform optical-to-electrical and electrical-to-optical signal conversion;

a control module electrically coupled to the bi-directional optical interface block and configured to receive from the head end of the passive optical network data communications representing one or more start times for transmitting data communications to the head end of the passive optical network and configured to transmit the

data communications to the head end of the passive optical network responsive to the start times; and

an electrical network interface port electrically coupled to the control module and for electrically coupling into the optical module port of the switch or router and for communicating with the switch or router; whereby

the network client optical transceiver module is configured to optically communicate with the head end of the passive optical network responsive to start times for transmitting data communications to the head end of the passive optical network and the network client optical transceiver module is configured to removably couple to the optical module port of the switch or router and electrically communicate with the switch or router.

2. The network client optical transceiver module of claim **1**, wherein the pluggable form factor of the network client optical transceiver module is selected from the group consisting essentially of:

Small Form-factor Pluggable (SFP);

10 Gigabit Small Form-factor Pluggable (XFP);

XENPAK;

X2; and

XPAK.

3. The network client optical transceiver module of claim **1**, wherein the control module is configured to receive from the head end of the passive optical network data communications representing one or more end times for transmitting data communications to the head end of the passive optical network and the control module is configured to end transmissions to the head end of the passive optical network response to the end times.

4. The network client optical transceiver module of claim **1**, wherein the control module is configured to receive from the head end of the passive optical network data communications representing one or more lengths of times respectively to the start times for transmitting data communications to the head end of the passive optical network and the control module is configured to transmit to the head end of the passive optical network response to the lengths of times.

5. The network client optical transceiver module of claim **1**, wherein the optical port is adapted to optically couple to one or more optical fibers selected from the group consisting of:

multimode optical fibers; and

single mode optical fibers.

6. The network client optical transceiver module of claim **1**, wherein the optical port includes one or more optical fiber connectors and the optical fiber connectors are selected from the group consisting essentially of:

Subscriber Connector (SC);

Lucent Connector (LC);

Fiber Channel (FC);

Straight TP (ST); and

Miniature Unit (MU).

7. The network client optical transceiver module of claim **1**, wherein the electrical network interface port includes an interface selected from the group consisting essentially of:

a serial interface;

a parallel interface; and

a XAUI interface.

8. The network client optical transceiver module of claim **1**, wherein the network client optical transceiver module includes a framing block electrically coupled to the bi-directional optical interface block and the control module is electrically coupled to the framing block and wherein the framing block is configured for framing data communications for transmission in accordance with a framing protocol for the passive optical network.

9. The network client optical transceiver module of claim **1**, wherein the control module is configured to receive from the head end of the passive optical network an assigned network identification address and wherein the assigned network identification address can be used for receiving data addressed to the network client optical transceiver module.

10. The network client optical transceiver module of claim **1**, wherein the control module is configured to respond to the head end of the passive optical network responsive to a network operating protocol for new network clients.

11. The network client optical transceiver module of claim **1**, wherein the control module is configured to respond to a response delay message from the head end of the passive optical network, wherein the response delay message is used to determine the delay in responses from the network client optical transceiver module.

12. The network client optical transceiver module of claim **1**, wherein the control module is configured to align data communication transmissions with the network period of the optical network to account for transmission delays responsive to a response delay process.

13. The network client optical transceiver module of claim **1**, wherein the control module is configured to adjust the transmitting optical power level responsive to a message received from the head end of the passive optical network.

14. The network client optical transceiver module of claim **1**, wherein the control module is configured to encapsulate at least a portion of the data received through the electrical network interface port into a payload section of a framing protocol for the passive optical network.

15. The network client optical transceiver module of claim **1**, wherein the network client optical transceiver module includes one or more of the following:

a laser;

a laser driver;

a photodiode;

a transimpedance amplifier; and

a limiting amplifier.

16. The network client optical transceiver module of claim **1**, wherein the network client optical transceiver module is an optical network terminal (ONT) and includes a discrete chip selected from the group consisting essentially of:

a media access controller (MAC) discrete chip; and

a transmission convergence layer (TC-Layer) discrete chip.

17. The network client optical transceiver module of claim **1**, wherein the network client optical transceiver module includes 8/10 bit encoding for communications sent and 8/10 bit decoding for communications received through the electrical network interface port.

18. A network client optical transceiver module for a passive optical network, the passive optical network having one or more passive optical splitters for coupling the network client optical transceiver module over one or more optical fibers to the head end of the passive optical network and the network client optical transceiver module having a pluggable form factor and adapted to removably couple to an optical module port of a switch or router, and the network client optical transceiver module having an optical port for coupling to one or more optical fibers of the passive optical network, and the network client optical transceiver module having an optical interface block optically coupled to the optical port and for converting electrical signals to optical signals and for converting optical signals to electrical signals, and the network client optical transceiver module having a control module electrically coupled to the optical interface block and for communicating with the head end of the passive optical net-

work, and the network client optical transceiver module having an electrical network interface port electrically coupled to the control module and for electrically communicating to the switch or router, a method of communicating with the head end of a passive optical network from the network client optical transceiver module comprising the steps of:

(a) receiving data from the switch or router through the electrical network interface port of the network client optical transceiver module;

(b) storing the received data inside the network client optical transceiver module;

(c) receiving a first optical signal from the head end of the passive optical network through the optical port at the optical interface block of the network client optical transceiver module;

(d) converting the first optical signal to an electrical signal at the optical interface block and conveying the electrical signal to the control module of the network client optical transceiver module;

(e) processing the electrical signal at the control module to determine one or more start times for data transmissions from the network client optical transceiver module to the head end of the passive optical network;

(f) converting a portion of the stored received data to a second optical signal; and

(g) transmitting the second optical signal from the optical interface block through the optical port responsive to the one or more start times for data transmissions to the head end of the passive optical network; whereby

the network client optical transceiver module optically communicates with the head end of the passive optical network responsive to start times for data transmissions and the network client optical transceiver module electrically communicates with the switch or router.

19. The method of claim **18**, wherein the pluggable form factor of the optical transceiver module is selected from the group consisting essentially of:

SFP;
XFP;
XENPAK;
X2; and
XPAK.

20. The method of claim **18**, further comprising the steps of:

(e1) processing the electrical signal at the control module to determine one or more end times for data transmissions from the network client optical transceiver module to the head end of the passive optical network; and

(g1) terminating the transmission of the second optical signal responsive to an end time for data transmissions to the head end of the passive optical network.

21. The method of claim **18**, further comprising the steps of:

(e1) processing the electrical signal at the control module to determine one or more lengths of times respective to the start times for data transmissions from the network client optical transceiver module to the head end of the passive optical network; and

(g1) transmitting the second optical signal responsive to a length of time for data transmissions to the head end of the passive optical network.

22. The method of claim **18**, wherein the optical port is adapted to optically couple to one or more optical fibers selected from the group consisting of:

multimode optical fibers; and
single mode optical fibers.

23. The method of claim **18**, wherein the optical port includes one or more optical fiber connectors and the optical fiber connectors are selected from the group consisting essentially of:

SC;
LC;
FC;
ST; and
MU.

24. The method of claim **18**, wherein the electrical network interface port includes an interface selected from the group consisting essentially of:

a serial interface;
a parallel interface; and
a XAUI interface.

25. The method of claim **18**, further comprising the step of:

(e1) processing the electrical signal at the control module to determine an assigned network identification address from the head end of the passive optical network for addressing data to the network client optical transceiver module at the control module.

26. The method of claim **18**, further comprising the step of:

(g1) adjusting the transmission of the second optical signal from the optical interface block through the optical port to account for the response delay of the optical transceiver module.

27. The method of claim **18**, further comprising the step of:

(e1) processing the electrical signal at the control module to determine an optical power level and adjusting the transmit optical power level of the network client optical transceiver module to the determined optical power level.

28. The method of claim **18**, further comprising the step of:

(f1) encapsulating a portion of data received through the electrical network interface port into the payload section of a framing protocol for the passive optical network at the control module for conveyance to the optical interface block.

29. The method of claim **18**, wherein the network client optical transceiver module includes one or more of the following:

a laser;
a laser driver;
a photodiode;
a transimpedance amplifier; and
a limiting amplifier.

30. The method of claim **18**, wherein the network client optical transceiver module is ONT and includes a discrete chip selected from the group consisting essentially of:

a MAC discrete chip; and
a TC-Layer discrete chip.

31. The method of claim **18**, further comprising the steps of:

(b1) performing 8/10 bit decoding on the received data; and

(h) performing 8/10 bit encoding on data sent through the electrical network interface port.

32. A head end optical transceiver module for a passive optical network, the passive optical network having one or more passive optical splitters for coupling one or more optical network clients over one or more optical fibers to the head end optical transceiver module and the head end optical transceiver module having a pluggable form factor and configured to removably couple to an optical module port of a switch or router, the head end optical transceiver module comprising:

an optical port configured to optically couple to one or more optical fibers of the passive optical network having one or more passive optical splitters;

a bi-directional optical interface block optically coupled to the optical port and configured to perform optical-to-electrical and electrical-to-optical signal conversion;

a control module electrically coupled to the optical interface block and configured to communicate with one or more optical network clients as the head end of the passive optical network and configured to allocate and transmit data representing one or more start times for communication transmissions from one or more optical network clients to the optical network clients; and

an electrical network interface port electrically coupled to the control module and for electrically coupling into the optical module port of the switch or router and for communicating with the switch or router; whereby

the head end optical transceiver module is configured to optically communicate across the passive optical network with the optical network clients and manage the communications of one or more optical network clients by allocating and transmitting data representing start times for optical network client transmissions and the head end optical transceiver module is configured to removably couple to the optical module port of the switch or router and configured to electrically communicate with the switch or router.

33. The head end optical transceiver module of claim **32**, wherein the pluggable form factor of the head end optical transceiver module is selected from the group consisting essentially of:

SFP;
XFP;
XENPAK;
X2; and
XPAK.

34. The head end optical transceiver module of claim **32**, wherein the control module is configured to allocate and send data communications representing one or more end times respectively to the start times for transmitting data communications from a network client to the head end of the passive optical network.

35. The network client optical transceiver module of claim **32**, wherein the control module is configured to allocate and send data communications representing one or more lengths of times respectively to the start times for transmitting data communications from a network client to the head end of the passive optical.

36. The head end optical transceiver module of claim **32**, wherein the optical port is adapted to optically couple to one or more optical fibers selected from the group consisting of:

multimode optical fibers; and
single mode optical fibers.

37. The head end optical transceiver module of claim **32**, wherein the optical port includes one or more optical fiber connectors and the optical fiber connectors are selected from the group consisting essentially of:

SC;
LC;
FC;
ST; and
MU.

38. The head end optical transceiver module of claim **32**, wherein the electrical network interface port includes an interface selected from the group consisting essentially of:

a serial interface;
a parallel interface; and
a XAUI interface.

39. The head end optical transceiver module of claim **32**, wherein the head end optical transceiver module includes a framing block electrically coupled to the bi-directional optical interface block and the control module is electrically coupled to the framing block and wherein the framing is configured for framing data for transmission in accordance with a framing protocol for the passive optical network.

40. The head end optical transceiver module of claim **32**, wherein the control module is configured to assign and transmit a network identification address for an optical network client of the passive optical network for addressing data to the optical network client.

41. The head end optical transceiver module of claim **32**, wherein the control module is configured to transmit a message to new optical network clients on the passive optical network wherein the message requests the new optical network clients to identify themselves to the head end optical transceiver module.

42. The head end optical transceiver module of claim **32**, wherein the control module is configured to transmit a response delay message to a optical network client of the passive optical network, wherein the response delay message is used to determine the delay in responses from the optical network client.

43. The head end optical transceiver module of claim **32**, wherein the control module is configured to allocate start times for optical network client transmissions to guarantee a minimum transfer rate from the optical network clients and wherein the minimum transfer rate can be determined by dividing the maximum receive rate of the head end optical transceiver module by the number of optical network clients.

44. The head end optical transceiver module of claim **32**, wherein the control module is configured to allocate start times for optical network client transmissions to minimize the depth of the memory buffer queues of optical network clients wherein the control module receives status information representing the optical network client memory buffer queues.

45. The head end optical transceiver module of claim **32**, wherein the control module is configured to send a request to adjust transmit optical power levels in a message to an optical network client.

46. The head end optical transceiver module of claim **32**, where the control module is configured to encapsulate at least a portion of the data received through the electrical network interface port into a payload section of a framing protocol for on the passive optical network.

47. The head end optical transceiver module of claim **32**, wherein the head end optical transceiver module includes one or more of the following:

a laser;
a laser driver;
a photodiode;
a transimpedance amplifier; and
a limiting amplifier.

48. The head end optical transceiver module of claim **32**, wherein the head end optical transceiver module is an optical line terminal (OLT) and includes a discrete chip selected from the group consisting essentially of:

a MAC discrete chip; and
a TC-Layer discrete chip.

49. A head end optical transceiver module for the head end of a passive optical network, the passive optical network having one or more passive optical splitters for coupling one or more optical network clients over one or more optical fibers to the head end optical transceiver module and the head end optical transceiver module having a pluggable form factor and adapted to removably couple to an optical module port of a switch or router, the head end optical transceiver module having an optical port for coupling to one or more optical

fibers of the passive optical network, and the head end optical transceiver module having an optical interface block optically coupled to the optical port and for converting electrical signals to optical signals and for converting optical signals to electrical signals, and the head end optical transceiver module having a control module electrically coupled to the optical interface block and for communicating with optical network clients on the passive optical network, and the head end optical transceiver module having an electrical network interface port electrically coupled to the control module and for electrically communicating to the switch or router, a method of allocating start times to optical network clients by the head end optical transceiver module for communication transmissions from the optical network clients comprising the steps of:

(a) allocating one or more start times for communication transmissions from an optical network client at the control module of the head end optical transceiver module;

(b) generating a first message containing information representing the allocated start times for communication transmissions from an optical network client at the control module;

(c) addressing the first message to the optical network client at the control module;

(d) conveying the first message to the optical interface block of the head end optical transceiver module;

(e) converting the first message to a first optical signal at the optical interface block; and

(f) transmitting the first optical signal from the optical interface block through the optical port of the head end optical transceiver module;

(g) receiving a second optical signal from the optical network client responsive to the first message containing information representing the allocated start times through the optical port and at the optical interface block;

(h) converting the second optical signal to an electrical signal at the optical interface block; and

(i) conveying a portion of the electrical signal to the switch or router through the electrical network interface by the control module of the head end optical transceiver module; whereby

the head end optical transceiver module manages optical communications across the passive optical network by allocating start times for optical network clients to transmit optical communications and the head end optical transceiver module electrically communicates with the switch or router.

50. The method of claim **49**, wherein the pluggable form factor of the head end optical transceiver module is substantially the same form factor selected from the group consisting essentially of:

SFP;
XFP;
XENPAK;
X2; and
XPAK.

51. The method of claim **49**, further comprising the steps of:

(b) generating a first message containing information representing the allocated start times and end times for communication transmissions from an optical network client at the control module; and

(g) receiving a second optical signal from the optical network client responsive to the first message containing information representing the allocated start times and end times through the optical port and at the optical interface block.

52. The method of claim **49**, further comprising the steps of:

(b) generating a first message containing information representing the allocated start times and length of times for communication transmissions from an optical network client at the control module; and

(g) receiving a second optical signal from the optical network client responsive to the first message containing information representing the allocated start times and length of times through the optical port and at the optical interface block.

53. The method of claim **49**, wherein the optical port is adapted to optically couple to one or more optical fibers selected from the group consisting of:

multimode optical fibers; and
single mode optical fibers.

54. The method of claim **49**, wherein the optical port includes one or more optical fiber connector sockets and the optical fiber connector sockets are selected from the group consisting essentially of:

SC;
LC;
FC;
ST; and
MU.

55. The method of claim **49**, wherein the electrical network interface port includes an interface selected from the group consisting essentially of:

a serial interface;
a parallel interface; and
a XAUI interface.

56. The method of claim **49**, wherein the conveying a portion of the electrical signal to the switch or router includes adapting the portion of the electrical signal in accordance to an OSI Layer 2 protocol by the control module.

57. The method of claim **49**, further comprising the steps of:

(a) assigning a network identification address to an optical network client for addressing data to the optical network client at the control module; and

(b) transmitting the network identification address to the optical network client from the optical interface block and through the optical port.

58. The method of claim **49**, further comprising the step of:

(j) generating a second message for new optical network clients on the passive optical network at the control module wherein the second message requests the new optical network clients to identify themselves to the head end optical transceiver module; and

(k) transmitting the second message from the optical interface block through the optical port to the new optical network clients on the passive optical network.

59. The method of claim **49**, further comprising the step of:

(j) generating a response delay message for an optical network client of the passive optical network at the con-

trol module, wherein the response delay message is used to determine the delay in responses from the optical network client; and

(k) transmitting the response delay message to an optical network client of the passive optical network from the optical interface block and through the optical port.

60. The method of claim **49**, wherein the allocating start times for communication transmissions from an optical network client includes allocating start times to an optical network client to guaranteed a minimum transfer rate from the optical network client and wherein the minimum guaranteed transfer rate can be determined by dividing the maximum receive rate of the head end optical transceiver module by the number of optical network clients.

61. The method of claim **49**, wherein allocating start times for communication transmissions from an optical network client includes allocating start times to an optical network client to minimize the depth of the memory buffer queue of the optical network client wherein the head end optical transceiver module receives status information representing the optical network client memory buffer queue.

62. The method of claim **49**, further comprising the steps of:

(j) generating a second message for an optical network client on the passive optical network at the control module wherein the second message requests the optical network client to adjust transmit optical power levels; and

(k) transmitting the second message from the optical interface block through the optical port to the optical network clients on the passive optical network.

63. The method of claim **49**, further comprising the steps of:

(j) receiving data through the electrical network interface port;

(k) converting a portion of the data received into the payload section of a framing protocol for the passive optical network; and

(l) transmitting optically by the optical interface block the converted portion of data received through the electrical network interface port to an optical network client.

64. The method of claim **49**, wherein the head end optical transceiver module includes one or more of the following:

a laser;
a laser driver;
a photodiode;
a transimpedance amplifier; and
a limiting amplifier.

65. The method of claim **49**, wherein the head end optical transceiver module is an OLT and includes a discrete chip selected from the group consisting essentially of:

a MAC discrete chip; and
a TC-Layer discrete chip.

* * * * *