US006439918B1

(12) **United States Patent**
Togami et al.

(10) **Patent No.: US 6,439,918 B1**
(45) **Date of Patent: Aug. 27, 2002**

(54) **ELECTRONIC MODULE HAVING AN INTEGRATED LATCHING MECHANISM**

(75) Inventors: **Chris Togami**, San Jose; **Guy Newhouse**, Freemont, both of CA (US)

(73) Assignee: **Finisar Corporation**, Sunnyvale, CA (US)

(*) Notice: Subject to any disclaimer, the term of this patent is extended or adjusted under 35 U.S.C. 154(b) by 0 days.

(21) Appl. No.: **09/971,885**

(22) Filed: **Oct. 4, 2001**

(51) **Int. Cl.**[7] **H01R 13/64**

(52) **U.S. Cl.** **439/372**; 439/638; 439/76.1; 439/157

(58) **Field of Search** 439/372, 638, 439/76.1, 352, 157

(56) **References Cited**

U.S. PATENT DOCUMENTS

4,995,821	A	*	2/1991	Casey	439/372
5,021,003	A	*	6/1991	Ohtaka et al.	439/372
5,901,263	A		5/1999	Gaio et al	385/92
5,980,324	A		11/1999	Berg et al.	439/630
6,074,228	A		6/2000	Berg et al.	439/180
6,101,087	A	*	8/2000	Sutton et al.	439/638
6,142,802	A		11/2000	Berg et al.	439/180
6,149,465	A		11/2000	Berg et al.	439/630
6,179,627	B1	*	1/2001	Daly et al.	439/76.1

* cited by examiner

Primary Examiner—Renee Luebke
Assistant Examiner—Briggitte R Hammond
(74) *Attorney, Agent, or Firm*—Workman, Nydegger & Seeley

(57) **ABSTRACT**

An integrated latching mechanism for use with a user pluggable electronic module, such as an opto-electronic transceiver module, is disclosed. The latching mechanism allows the user to selectively latch the module within a corresponding host port by manipulation of a lever formed on a bail. Movement of the bail causes a locking pin to extend and latch the module within the port. Conversely, movement of the bail can be used to disengage the locking pin and thereby allow the user to extract the module from within the port. Operatively movement of the lock pin is accomplished by forming a cam on the bail lever. Movement of the bail lever thus causes movement of the cam which corresponds to movement of a locking pin from a latched to a delatched position.

18 Claims, 6 Drawing Sheets

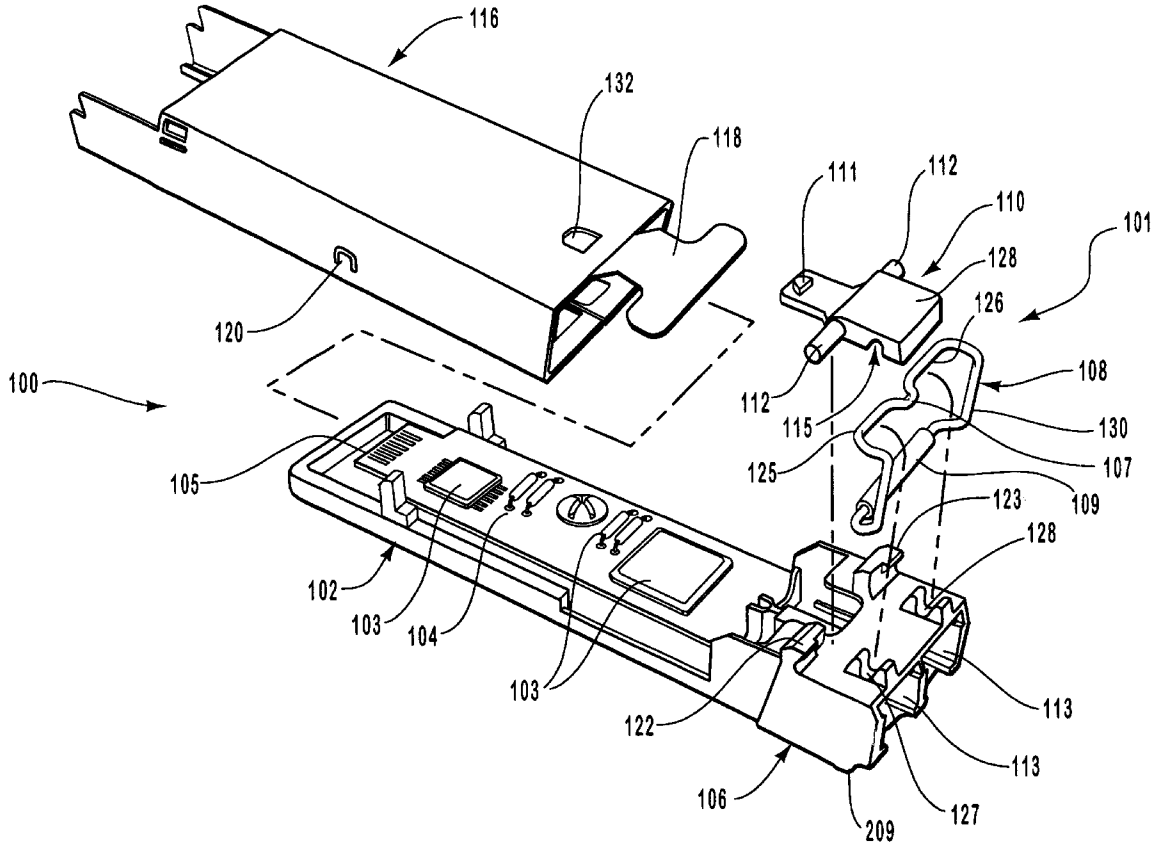

Nokia of America Corporation
IPR2023-00960, Ex. 1007

AT&T Ex. 1007

Ex. 1007.001

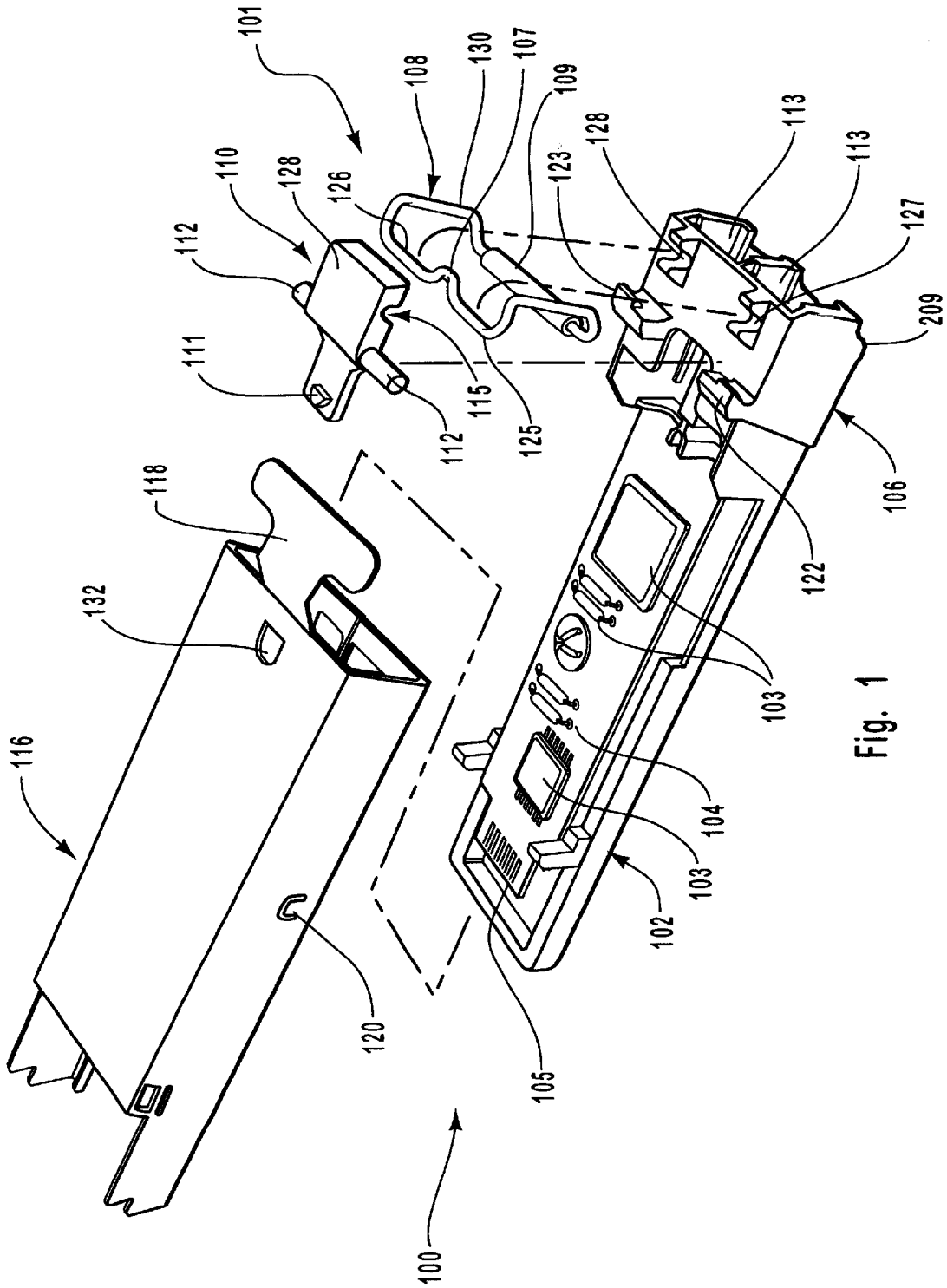
101
108
130
107
109
128
113
113
110
128
126
123
127
112
209
111
115
125
112
106
118
122
132
103
116
104
103
102
120
105
100

Fig. 1

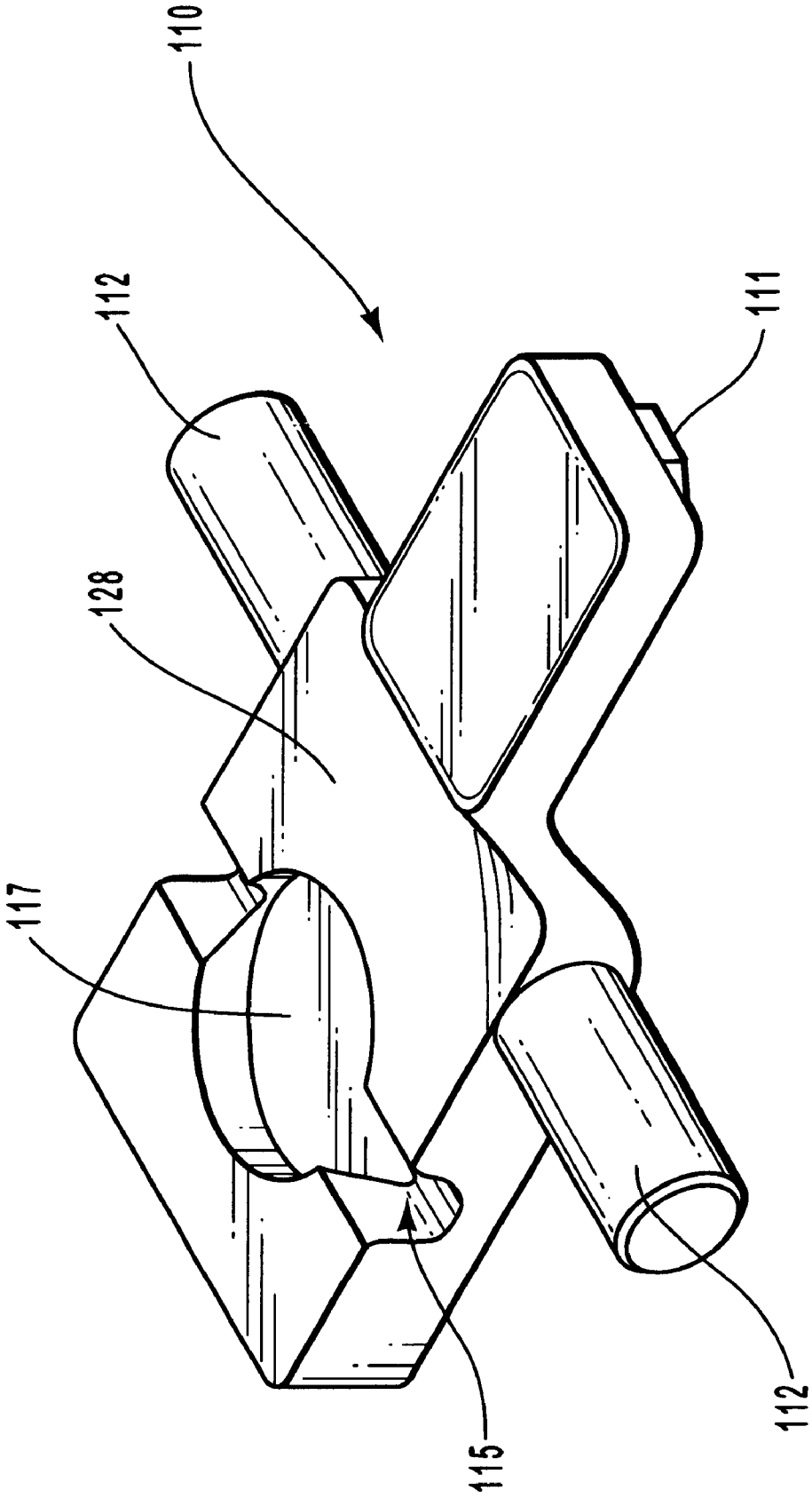

Fig. 1A

Nokia of America Corporation
IPR2023-00960, Ex. 1007
Ex. 1007.003

AT&T Ex. 1007

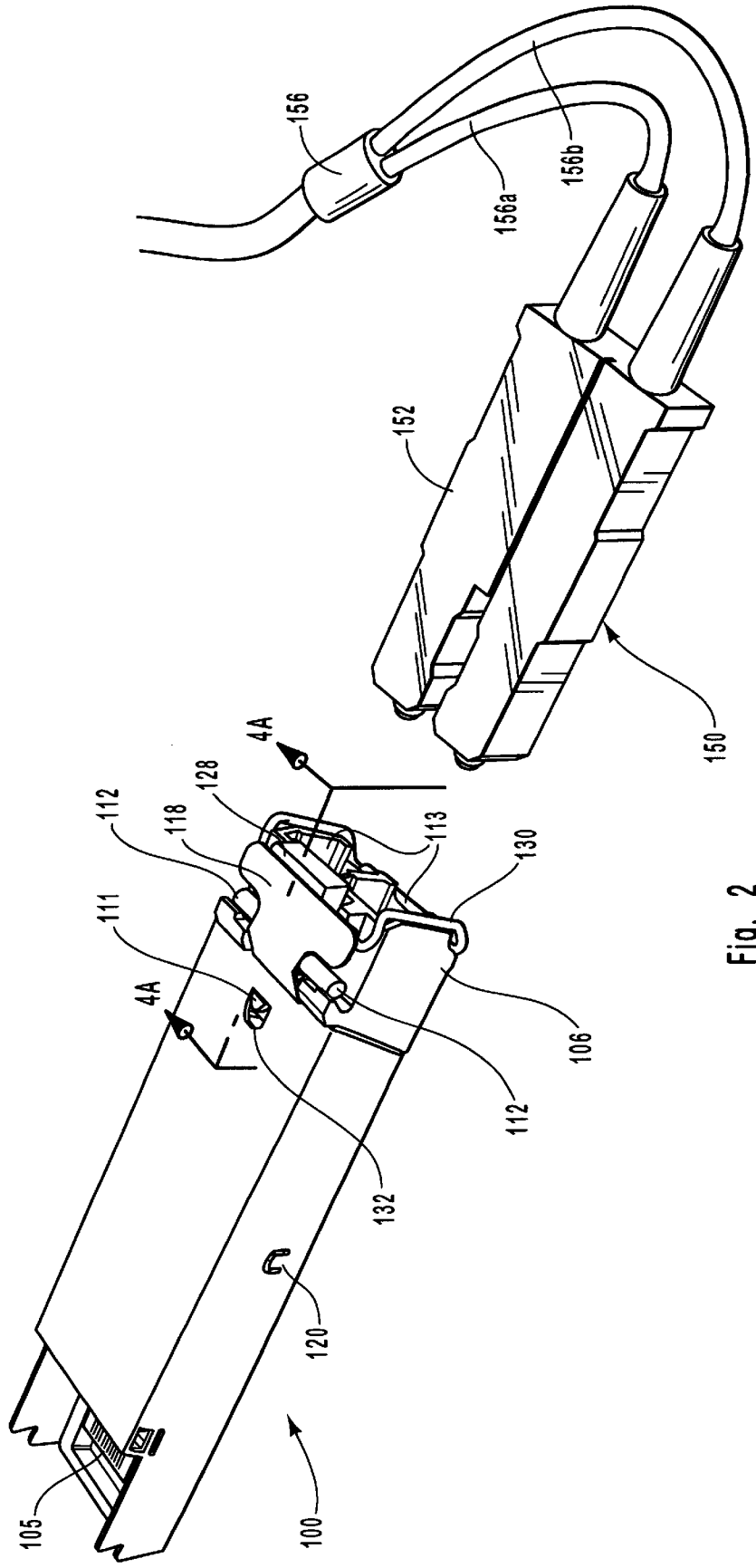
156
156a
156b
152
150
4A
128
112
118
113
130
111
4A
106
112
132
120
105
100

Fig. 2

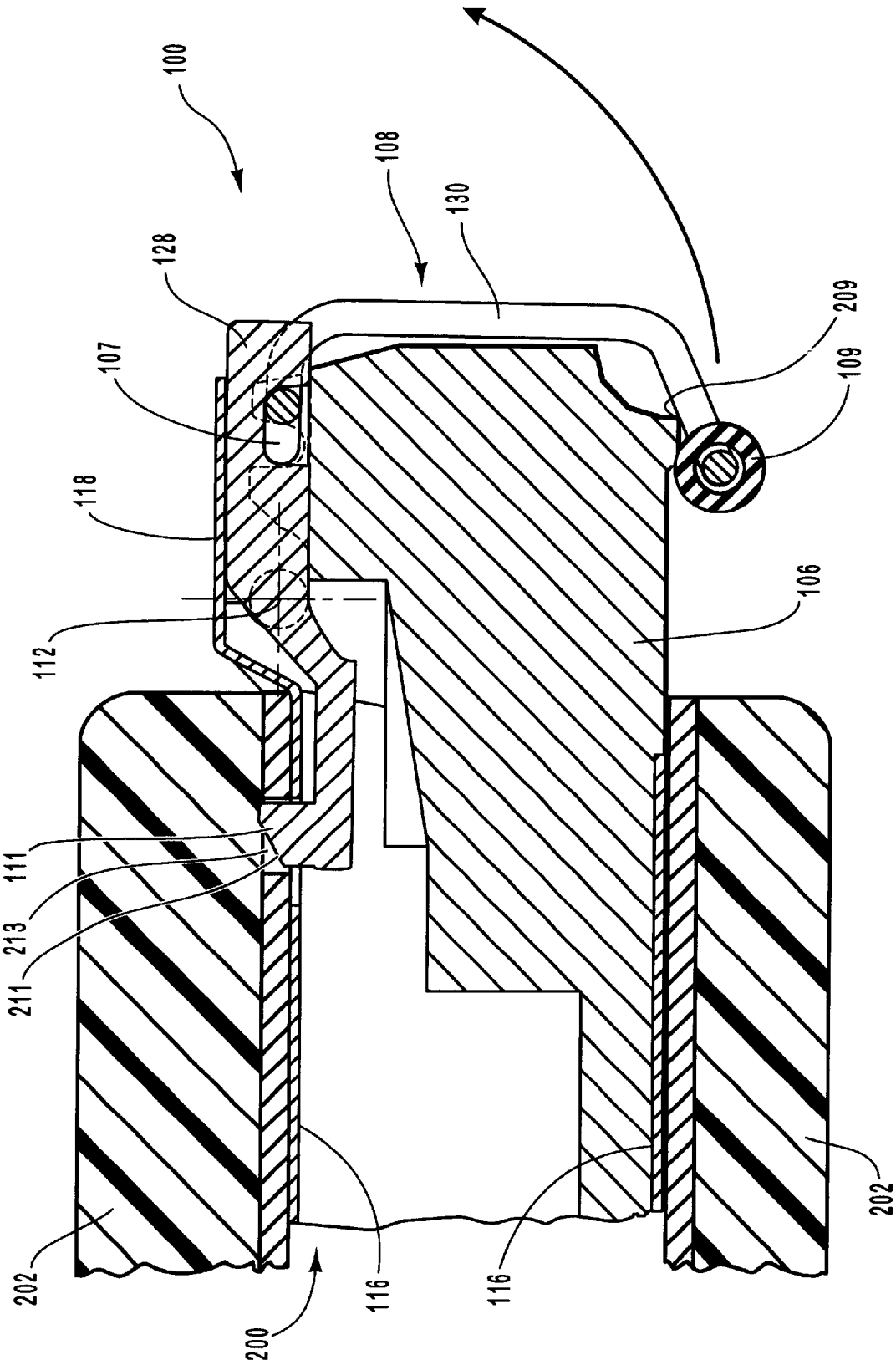
100
108
130
128
107
118
112
111
213
211
202
200
116
116
202
106
109
209

Fig. 3A

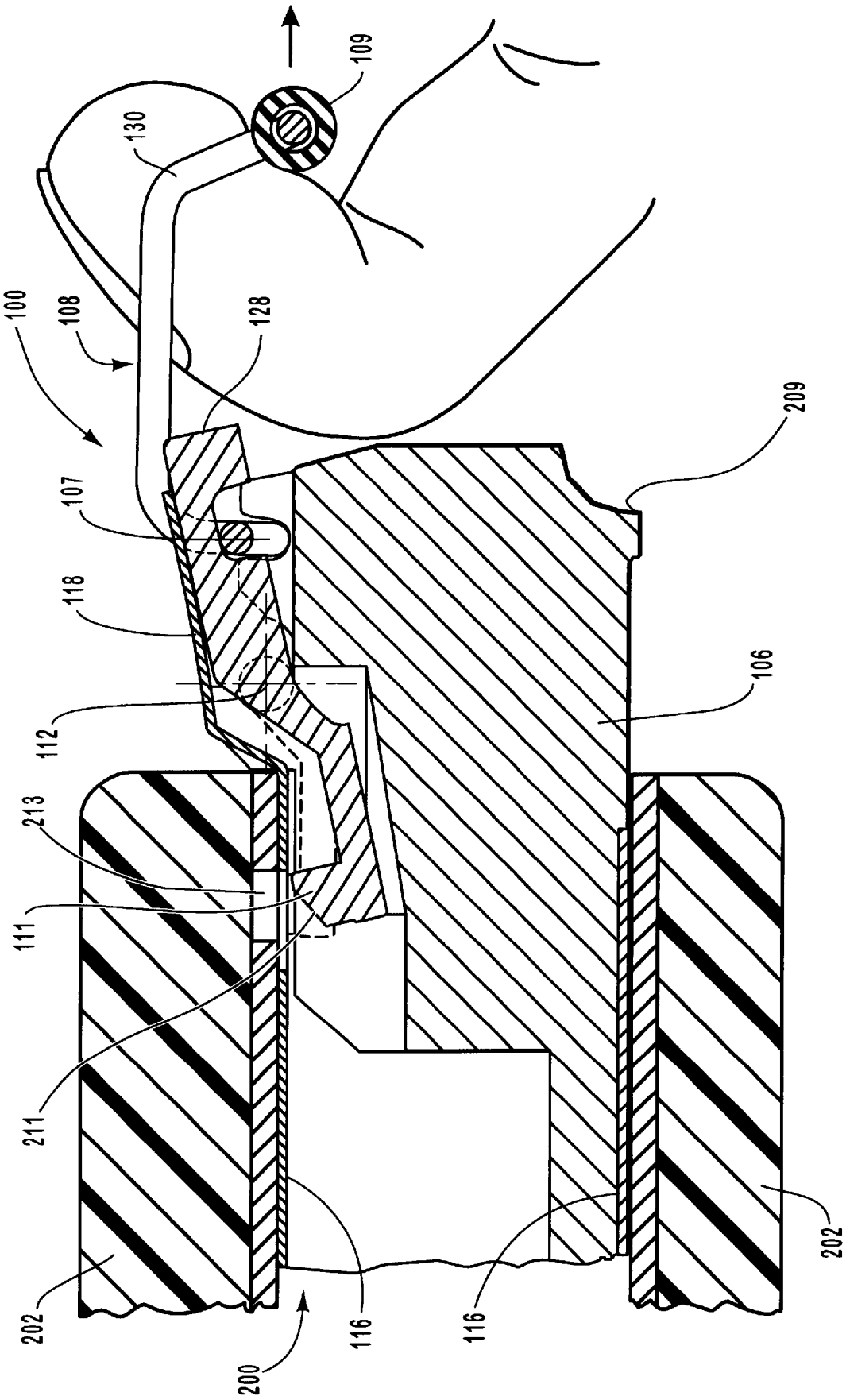
100
108
130
109
128
107
118
112
213
111
211
202
200
116
116
106
209
202

Fig. 3B

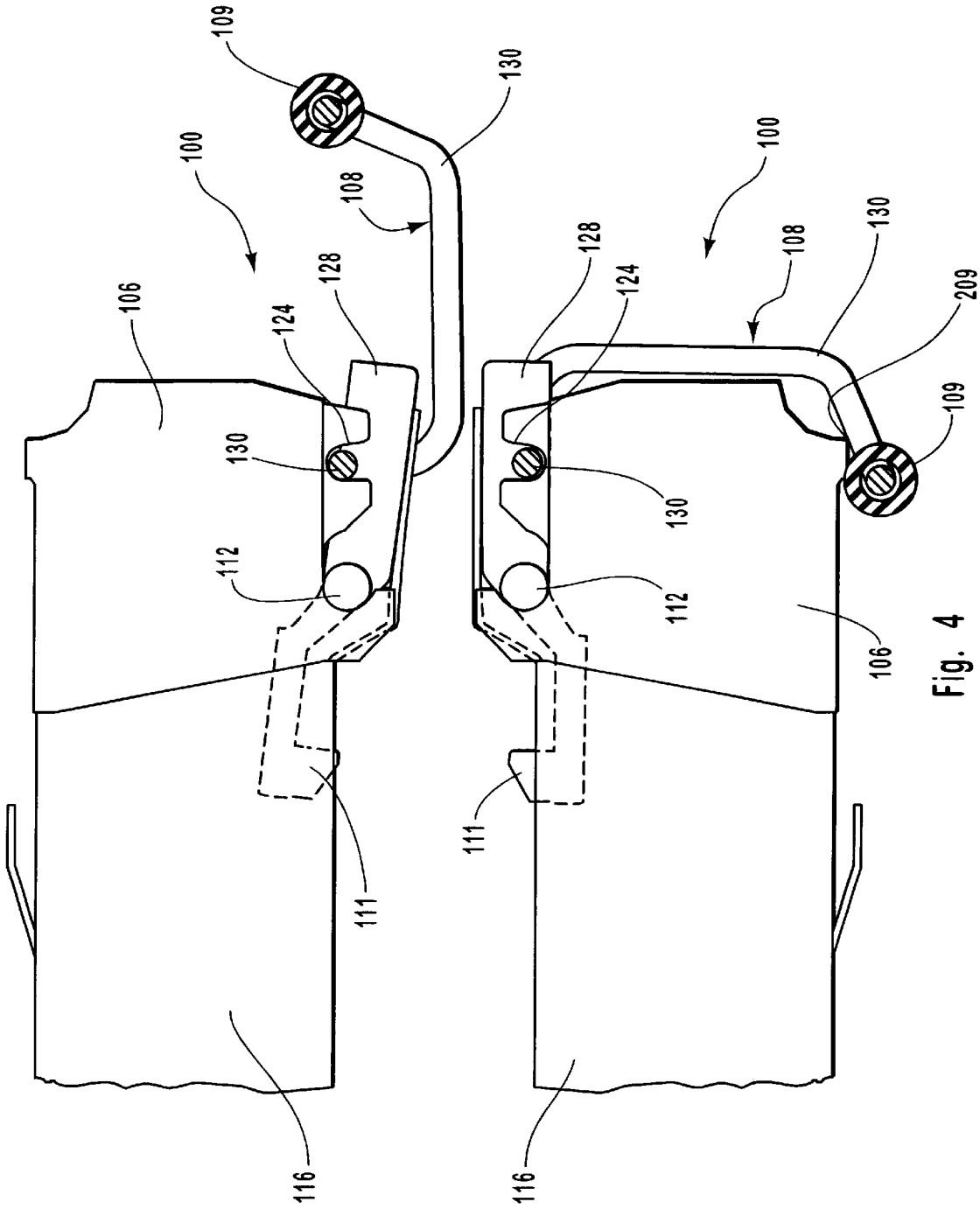
109
130
100
108
106
128
124
130
112
111
116
100
128
124
108
130
209
109
130
112
106
111
116

Fig. 4

ELECTRONIC MODULE HAVING AN INTEGRATED LATCHING MECHANISM

BACKGROUND OF THE INVENTION

1. The Field of the Invention

This invention relates generally to the field of electrical connector systems for electrical components. In particular, embodiments of the present invention relate to a latching system that is particularly useful for use with low profile, user-removable, electronic modules that interface with a port of a host device. For example, embodiments of the present invention may find particular use with opto-electronic transceiver modules used to interface a host device with an optical communications network.

2. The Relevant Technology

Fiber optics are increasingly used for transmitting voice and data signals. As a transmission medium, light provides a number of advantages over traditional electrical communication techniques. For example, light signals allow for extremely high transmission rates and very high bandwidth capabilities. Also, light signals are resistant to electromagnetic interferences that would otherwise interfere with electrical signals. Light also provides a more secure signal because it doesn't allow portions of the signal to escape from the fiber optic cable as can occur with electrical signals in wire-based systems. Light also can be conducted over greater distances without the signal loss typically associated with electrical signals on copper wire.

While optical communications provide a number of advantages, the use of light as a transmission medium presents a number of implementation challenges. In particular, the data carried by light signal must be converted to an electrical format when received by a device, such as a network switch. Conversely, when data is transmitted to the optical network, it must be converted from an electronic signal to a light signal. A number of protocols define the conversion of electrical signals to optical signals and transmission of those optical, including the ANSI Fibre Channel (FC) protocol. The FC protocol is typically implemented using a transceiver module at both ends of a fiber optic cable. Each transceiver module typically contains a laser transmitter circuit capable of converting electrical signals to optical signals, and an optical receiver capable of converting received optical signals back into electrical signals.

Typically, a transceiver module is electrically interfaced with a host device—such as a host computer, switching hub, network router, switch box, computer I/O and the like—via a compatible connection port. Moreover, in some applications it is desirable to miniaturize the physical size of the transceiver module to increase the port density, i.e., and therefore accommodate a higher number of network connections within a given physical space. In addition, in many applications, it is desirable for the module to be hot-pluggable, which permits the module to be inserted and removed from the host system without removing electrical power. To accomplish many of these objectives, international and industry standards have been adopted that define the physical size and shape of optical transceiver modules to insure compatibility between different manufacturers. For example, in 1998, a group of optical manufacturers developed a set of standards for optical transceiver modules called the Small Form-factor Pluggable ("SFP") Transceiver MultiSource Agreement ("MSA"). In addition to the details of the electrical interface, this standard defines the physical size and shape for the SFP transceiver modules, and the corresponding host port, so as to insure interoperability between

different manufacturers' products. The standard also specifies that the module be hot-pluggable. To do so, the standard specifies that a user provide a minimum amount of space between host ports, so that transceiver modules can be individually accessed and removed from the host device without disturbing the adjacent modules and/or cable connections.

While such standards may recommend that there be a minimum distance between adjacent ports, there is often a desire to provide configurations having a higher port density. However, providing a high port density can be at odds with the ability to provide a module that complies with existing standards—i.e., that has a small form-factor and is hot-pluggable. In particular, previously existing module designs present a size and profile that mandates that a specific minimum amount of space be provided between host ports so that individual modules can be accessed and removed without disturbing an adjacent module and/or an adjacent fiber cable. Such modules either cannot be used in a device having a high port density (due to the space requirements), or, if used in such an environment, require the use of a special extraction tool to allow for access and retrieval of a module without disturbing adjacent modules and/or cables. Use of an extraction tool is often not desirable because it raises costs, can be misplaced, and may not be compatible with other module designs.

Therefore, there is a need for a module, such as an optical transceiver module, that utilizes a latching scheme that allows the module to maintain its small form factor and that still complies with existing standards. At the same time, the latching scheme should allow the module to be easily inserted and extracted from a port without the need for a special extraction tool. Moreover, extraction should be possible in a manner that does not disturb the communications link of adjacent modules, i.e., extraction should be achieved without inadvertently removing an adjacent module and/or fiber cable, even in a host having high port density. Such a module would allow host systems to provide a higher packing density, and yet allow the use of small form factor transceiver modules that comply with existing standards,

BRIEF SUMMARY OF EMBODIMENTS OF THE INVENTION

These and other problems in the prior art are addressed by embodiments of the present invention, which relates to an electronic, pluggable module that is equipped with a unique latching mechanism. In an illustrated embodiment, the module is an opto-electronic transceiver module, typically used to interface an optical transmission cable medium to a host device, such as a network switch, hub, router, computer or the like.

In one preferred embodiment, the module is formed as a small form-factor pluggable ("SFP") device in accordance with existing industry standards. Moreover, the module is capable of being operatively received within a compatible port provided by the host device. It will be appreciated that while preferred embodiments are illustrated and described as an opto-electronic transceiver module, the present invention is not limited to that particular environment. Indeed, teachings of the present invention could also be utilized in any type of pluggable electronic module.

In an exemplary embodiment, the module includes a base portion that supports a printed circuit board (PCB) upon which is disposed the electronics needed for the functionality of the module. In addition, the PCB has an edge connector formed at one end that is capable of electrically

interfacing with the host device when the module is operatively received within the device port. Also disposed on one end of the base portion is at least one receptacle capable of physically receiving and interfacing with a corresponding optical fiber connector, which in turn is connected to a fiber optic cable. In a preferred embodiment, an outer housing encloses at least a portion of the base and the PCB to protect the electronic and optical components from dust and the like. Moreover, the housing defines an outer periphery that conforms in size and shape to the corresponding host port. In one preferred embodiment, the size and shape correspond to specifications defined by the MSA standard. Of course, other shapes and sizes could be used.

In illustrated embodiments, the module includes an integrated latching mechanism that provides several preferred functions. In particular, the latch mechanism provides the ability to releasably secure the transceiver module within the host port. Moreover, the latch mechanism can be implemented within a transceiver module having a SFP package, and can be done so with mechanical dimensions that do not violate industry standards. The latch mechanism permits easy extraction and insertion of the module by a user, even when it is used in a host device having a high-density port configuration—both laterally and vertically. Further, extraction can be accomplished without the use of a specialized extraction tool, and without disturbing adjacent modules and/or cables.

In one preferred embodiment, the latch mechanism is operated by way of a moveable bail lever. The bail is moveable between two positions, which in turn dictate the position of a locking pin. When placed in a latched position, the locking pin extends from the module and engages with a corresponding recess within the host port. In this position, the module is latched and secured within the port. When the bail is moved to an unlatched position, the locking pin is disengaged from the locking recess, which permits the module to be extracted from the port.

In the exemplary embodiment, movement of the locking pin by way of the bail is accomplished with a cam portion that is integrated with the bail lever. Rotation of the bail causes manipulation of the cam, which in turn operates against a cam follower surface formed on a pivot block which carries the locking pin. When in the latched position, the cam is disengaged from the cam follower surface, and a biasing means formed on the housing urges the pivot block to rotate the locking pin into the latched position. In contrast, in the unlatched position, the cam forces the pivot block to rotate the locking pin so that it is disengaged from the locking recess.

In addition to manipulating the latching mechanism, the bail also provides a lever for removing the module from the port. Thus, when positioned in the unlatched position, the bail extends outwardly to the front of the module, so that a pulling force results in the removal of the module. Importantly, in preferred embodiments the bail provides a handhold portion, so that this removal can be accomplished with a user's finger, and doesn't require the use of a specialized extraction tool. Moreover, since the bail is positioned in the front of the module, the module can be removed without disturbing adjacent modules and without disturbing adjacent cables—even when used in a host device having a high port density.

In a preferred embodiment, the shape of the bail and the rest of the latching mechanism are integrated within the module so as to not violate the requisite form factor. Moreover, the shape of the bail is such that when the fiber cable connector is positioned within the receptacle, the bail cannot be moved to the unlatched position. This prevents accidental removal of the module from the port, such as may otherwise occur when the cable or plug are inadvertently pulled.

The foregoing, together with other features and advantages of the present invention, will become more apparent when referred to the following specification, claims and accompanying drawings.

BRIEF DESCRIPTION OF THE DRAWINGS

In order that the manner in which the above recited and other advantages and features of the invention are obtained, a more particular description of the invention briefly described above will be given by making reference to a specific embodiment that is illustrated in the appended drawings. These drawings depict only one embodiment of the invention and are not to be considered limiting of its scope:

FIG. **1** illustrates an exploded perspective view of one presently preferred embodiment of a transceiver module having an integrated latch system;

FIG. **1**A is a perspective view of the bottom side of the pivot block portion of the latch system;

FIG. **2** is a perspective view of an assembled version of the transceiver module and latch system shown in FIG. **1** and a corresponding exemplary modular fiber cable connector and fiber cable assembly;

FIG. **3***a* is a cross sectional view of the transceiver module taken along lines **4**A—**4**A in FIG. **2** that shows a latch system in the latched position;

FIG. **3***b* is a cross sectional view of the transceiver module taken along lines **4**A—**4**A in FIG. **2** that shows a latch system in the unlatched position; and

FIG. **4** is a side view of two adjacent transceiver modules with corresponding latch systems in different operational positions.

DETAILED DESCRIPTION OF THE PREFERRED EMBODIMENTS

Reference will now be made to the drawings to describe presently preferred embodiments of the invention. It is to be understood that the drawings are diagrammatic and schematic representations of the presently preferred embodiments, and are not limiting of the present invention, nor are they necessarily drawn to scale.

In general, the present invention relates to an electronic module, such as an optical transceiver module, that utilizes a unique integrated latch system to releasably secure the transceiver module within a host slot or port. Moreover, the latch system can be implemented within a transceiver module having a low profile, and without violating existing industry standards, such as those specified in the SFP Transceiver MSA. The latch system permits easy extraction and insertion of the module by a user, even when it is used in a host system having a high-density port configuration, i.e., when the modules are disposed in ports immediately adjacent to one another in one or both lateral dimensions. Further, extraction can be accomplished without the use of a specialized extraction tool, and can be done without disturbing adjacent modules and cables.

Also, while embodiments of the present invention are described in the context of optical transceiver modules used in the field of optical networking, it will be appreciated that the teachings of the present invention are applicable to other

applications as well. For example, other types of pluggable electronic modules could utilize embodiments of the latch system to facilitate insertion and extraction from a corresponding host port.

Reference is first made to FIGS. **1** and **2** together, which illustrate perspective views of one presently preferred embodiment of an optical transceiver module, designated generally at **100**. In the illustrated example, the module **100** is comprised of an elongate base portion, designated generally at **102**, that is configured to support and retain a printed circuit board **104**. In this example, the circuit board accommodates the transceiver electronics **103** and optics (not shown), although it could be comprised of any circuitry or components depending on the type of module being used. Also formed on the printed circuit board **104** at a rear end is an exposed edge connector **105**. The edge connector **105** is configured to be electrically compatible with a corresponding electrical connector (not shown) that is positioned within the port of a host device. Other connector schemes that are well known in the art could also be used.

In the illustrated embodiment, a connector portion, designated generally at **106**, is positioned at one end of the base portion **102**. The connector portion **106** defines a receptacle configuration **113** that operatively receives a corresponding modular fiber connector configuration, such as is typically used to interface with an optical fiber cable. One example of such a fiber connector and cable configuration is shown at **150** in FIG. **2**. However, it will be appreciated that the receptacle could be implemented to accommodate any one of a number of different connector configurations, depending on the particular application involved.

As is further shown in FIGS. **1** and **2**, the module **100** further includes a latching mechanism, designated generally at **101**. In one presently preferred embodiment, the latch mechanism **101** provides several functions. First, the latch mechanism **101** provides a mechanism for "latching" the module **100** within a host port, represented at **200** in FIGS. **3**A and **3**B, when the module **100** is operatively received within the port. Moreover, as will also be described in further detail, the latch mechanism **101** also provides a convenient means for extracting the module **100** from the port, without the need for a special extraction tool. The latching mechanism is preferably implemented so as to preserve the small form factor of the module **100** in accordance with prevailing standards, and in a manner that allows convenient insertion and extraction of a single module without disturbing adjacent modules or adjacent fiber cables—even when used in a host having a high port density. Also, in a preferred embodiment, the latch mechanism precludes inadvertent extraction of the module **100** from the port when a modular fiber connector **150** is operatively received within the receptacle **112**.

By way of example and not limitation, in a preferred embodiment the latch mechanism **101** includes user accessible means for selectively latching the module **100** within a host port, and for extracting the module from the port. By way of example and not limitation, user accessible means can be comprised of a bail, designated generally at **108**. Preferably, the bail **108** has a main body portion **130** formed from a rigid metal wire. While the bail **108** could be configured in any one of a number of shapes, in a preferred embodiment the bail **108** is sized and shaped so as to be accessible with a user's finger, or any other common implement, such as a pen or the like. Also, the bail **108** is shaped so as to as conform substantially with the shape of the module **100** when the bail is placed in a "latched" position, as is represented in FIG. **2**. In this way, the bail does not violate the overall low profile presented by the module **100**. Also, in one embodiment, the bail **108** includes a grip or clasp **109** that is formed of a material that allows for easier access and gripping by a user's finger. The clasp **109** can be formed any number of ways, including a cylindrical piece that slides over the bail wire, or alternatively, it could be formed by using an overmold process.

In a preferred embodiment the bail **108** includes a cam that facilitates the latching and unlatching of the module within the port. FIG. **1** illustrates how the cam **107** is provided with a bend formed along a portion of the main body of the bail **108** between two shoulder portions **125** and **126**. It will be appreciated that the cam could be implemented along the length of the bail **108** using other techniques. Operation of the bail **108** and cam **107** will be discussed in further detail below.

Making continued reference to FIGS. **1**, **1**A and **2**, formed along the top surface of the connector portion **106** is a retention mechanism for operatively receiving the bail **108**. In the embodiment illustrated in FIG. **1**, the retention mechanism is comprised of dual retention slots **127** and **128** that are each sized and shaped to receive the corresponding shoulder portions **125**, **126** of the bail **108** when the latching system **101** is assembled. In operation of the latching mechanism **101**, the retention slots **127**, **128** permit rotation of the bail at the shoulder portions. Of course, the retention mechanism could be implemented in a number of different ways. For example, a single retention slot may suffice, or different geometries could be used.

In the illustrated embodiment, the bail **108** is operatively secured to the module **100** by way of an overlying pivot block, designated generally at **110**. FIGS. **1** and **1**A show how the pivot block **110** includes a pivot recess **115** that accommodates the shoulder portions **125**, **126** and the cam portion **107** when the pivot block **110** is disposed on the top surface of the connector block **106** between the retention slots **127** and **128**. As is shown in FIG. **1**A, which illustrates the bottom of the pivot block **110**, the pivot recess **115** preferably includes an enlarged portion **117** that is capable of operatively accommodating the cam portion **107** when the cam **107** is disposed in a horizontal orientation within the enlarged portion **117**. Again, the pivot recess **115** and the enlarged portion **117** secure the bail **108** to the module **100** in cooperation with the retention slots **127** and **128**, but do so in a manner so as to permit rotation of the bail **108** during operation of the latching mechanism. Rotation of the bail **108** causes the cam portion **107** to operatively engage a cam follower surface **119** formed on the pivot block **110** within portion **117**. This is discussed further below.

FIGS. **1** and **1**A illustrate how the pivot block **110** also includes a pivot arm **112** disposed along a pivot axis of the block **110**. When mounted on the top surface of the connector portion **106** of base **102**, each end of the pivot arm **112** is rotatably held within pivot points **122** and **123** that are each formed on the top surface of the connector portion **106**. In a preferred embodiment, the latching mechanism further includes means for latching the module **100** within a port slot. This latching means is provided by way of a lock pin **111** formed along the top surface of a pivot end of the block **110**. The pin **111** is preferably formed as a wedge having a leading edge **211** that is sloped or otherwise appropriately shaped, so as to facilitate insertion of the module **100** into the host port.

FIGS. **1** and **2** also illustrate how the base portion **102** and the printed circuit board are at least partially enclosed and retained within an outer housing, designated generally at

116. The outer housing **116** is generally rectangular in shape so as to accommodate the base portion **102**. The housing **116** includes an opening at its rear end so as to expose the edge connector **105** and thereby permit it to be operatively received within a corresponding electrical connector slot (not shown) within a host port **200**. The housing **116** can be formed of any appropriate material and in a preferred embodiment is comprised of sheet metal.

In a preferred embodiment, the housing **116** is also configured so as to provide a portion of the module's latching mechanism **101**. For example, the top surface of the housing includes a locking recess **132**, which is sized and shaped to expose the lock pin **111** of the pivot block **110** when the latch mechanism is in a latched position, as will be described below. Also, the housing **116** includes a means for biasing the latching mechanism to a latched position. By way of example, in one presently preferred embodiment the biasing means is comprised of a resilient metal portion of the housing that is formed as a leaf spring **118**. When assembled (FIG. **2**), the leaf spring **118** is biased against the top surface of the pivot block **110** so as to operatively secure it in its assembled position. Also, the biasing action is applied so as to urge the pivot block **110** in a rotational direction about pivot point **112** so as to expose lock pin **11** though locking recess **132**. This corresponds to the module being in a latched position.

Reference is next made to FIGS. **3**A and **3**B, which together illustrate the various preferred operating characteristics of the module **100** and its latching mechanism **101**. As noted, the transceiver module **100** is capable of being operatively received within an appropriate port, such as is represented at **200** of FIGS. **4**A and **4**B, of a host system, a portion of which is represented at **202**. When operatively received within the port **200**, the edge connector **105** is received within a corresponding electrical connector (not shown) disposed within the port **200**, so as to provide the requisite electrical interface between the transceiver module **100** and the host **202**. Also, at this point the modular cable connector **150** (FIG. **2**) of the optical cable **156** can be received within the receptacle **113** of the connector portion **106**.

In general, the relative position of the bail **108** governs the operational state of the latching mechanism **101**. When placed in a latched position, the module **100** is securely retained within a host port **200**. In an unlatched position, the module **100** can be removed from the host port **200**. For example, in the latched position, the position of the bail **108** is rotated and placed in a downward direction, as is shown in FIG. **2** and FIG. **3**A. In this position, the cam portion **107** of the bail **108** is horizontally disposed within the enlarged portion **117** of the cam follower surface **119** of the pivot recess **115** and is thus not exerting any cam force against the pivot block **110**. As such, the leaf spring **118** is biased against the top surface of the pivot block **110** at a point that urges the pivot block **110** in a rotational direction about pivot point **112** so as to expose lock pin **111** though locking recess **132**. This lock pin **111** is then able to engage with a corresponding notch or recess **213** that is formed within the port **200** of the host **202**. This engagement effectively "latches" the module **100** within the port **202**. In a preferred embodiment, the shape and configuration of the bail **108** also allow the cable connector **150** to be received within the modular receptacle **113** when the bail **108** is placed in this latched position. As noted, in this position the bail **108** does not violate the small profile presented by the module **100**. To this end, embodiments may include an overcenter lock, or nub **209**, provided on a lower edge of the base **106**. When placed in the latched position, the clasp **109** snaps over the nub **209** and is retained in that position until disengaged by the user.

The bail **108** is rotated upwardly, as is indicated by the directional arrow in FIG. **3**A, to place the latch mechanism **101** into an "unlatched" position, shown in FIG. **3**B. When the bail **108** is rotated upwardly, the cam portion **107** is rotated to a vertical orientation within enlarged recess portion **117**. Because the height of the recess portion **117** is less than that of the vertically extended cam, rotation of the cam **107** exerts an upward force on the cam follower surface **119** of the pivot block **110** formed within the recess portion **117**. The force of the cam **107** against the cam follower surface **119** provided on the pivot block overcomes the biasing action provided by the leaf spring **188** and causes the pivot block **110** to pivot in the opposite direction about axis **112**. This lowers the pivot lock pin **111** so that it is disengaged from the notch **213** formed within the host port **200**. In this unlatched state, the user, by pulling on the lever formed by the bail **108**, can remove the module **100** from the port, as is represented in FIG. **3**B. Since the bail **108** extends out in front of the module **100**, extraction can be accomplished without having to grip the sides of the module, and without disturbing and/or otherwise inadvertently effecting the connection status of an adjacent module or fiber cable. Also, the shape and configuration of the bail **108** insures that it cannot be rotated to the unlatched position while a connector **150** is disposed within the modular receptacle **113**. This prevents accidental removal of the module **100** from the port by inadvertently pulling on the connector **150** or cable **156**.

FIG. **4** illustrates a profile view of two immediately adjacent transceiver modules, placed in what is sometimes referred to as a "belly-to-belly" configuration. This might ,correspond to a port configuration in a host device having a high port density. The disclosed latching mechanism allows this physical orientation and still permits retraction of one module without disturbing an adjacent module, or the cable of an adjacent module. As is shown, the bail **108** in the upper module can be rotated to an unlatched position so as to permit extraction of that module or the cable of an adjacent module. The bottom module remains in the latched position, and neither it or the cable (not shown) within its receptacle is disturbed by the extraction of the upper module.

To summarize, embodiments of the present invention provide a number of advantages over existing pluggable electronic module designs. The disclosed electronic module utilizes a unique latching mechanism that allows the module to be easily extracted from a host port—even in environments having a high port density. In particular, the latching mechanism allows a module to be retrieved from a port without the need for specialized extraction tools, and in a manner that does not disturb adjacent modules and/or adjacent fiber cables. Moreover, when a cable connector is operatively received within the port's receptacle, the latching mechanism insures that the module is latched within the port, and is not extracted by inadvertently pulling on the plug or cable. Finally, the latching mechanism is implemented in a manner so as to preserve the overall low profile presented by the module, as is required by existing industry standards.

It will be evident that there are numerous embodiments of the present invention, which, while not specifically

described above, are clearly within the scope and spirit of the invention. Consequently, the above description is considered to be exemplary only, and the full scope of the invention is to be determined solely by the appended claims.

What is claimed and desired to be secured by United States Letters Patent is:

1. An electronic module capable of being selectively received within a port of a host device, the module comprising:

a housing forming an interior portion that at least partially encloses a printed circuit board capable of electrically interfacing with the host device when the module is operatively received within the port;

a locking pin; and

a bail that is operatively attached to the module so as to be selectively moveable between at least a first and a second position, the bail further comprising:

a cam portion, the cam portion capable of causing the locking pin to engage the module within the port when the bail is placed in the first position, and capable of causing the locking pin to disengage the module within the port when the bail is placed in the second position; and

a lever portion configured to allow removal of the module from the port when the bail is in the second position by applying a pulling force to the lever portion.

2. An electronic module as defined in claim **1**, wherein the locking pin is disposed on a pivot block that is rotated about a pivot axis by the cam portion.

3. An electronic module as defined in claim **1**, further comprising a receptacle disposed at an end of the module, the receptacle capable of physically receiving and interfacing with a corresponding connector.

4. An electronic module as defined in claim **3**, wherein the connector is a fiber optic connector.

5. An electronic module as defined in claim **3**, wherein the bail is prevented from being moved from the first position to the second position when the connector is received within the receptacle.

6. An electronic module as defined in claim **1**, further comprising means for biasing the locking pin to engage the module within the port.

7. An electronic module as defined in claim **6**, wherein the biasing means is comprised of a leaf spring.

8. An electronic module comprising:

a base portion having an electrical connector at a first end that is capable of interfacing with a host device when the module is operatively received within a host port, and a second end having at least one receptacle capable of physically receiving and interfacing with a corresponding cable connector;

a latching mechanism that selectively latches the module within the host port; and

a moveable bail that is operatively attached to the base portion, wherein selective movement of the bail to a first predetermined position operates the latching mechanism so as to unlatch the module from within the host port and allow its extraction from the port.

9. An electronic module as defined in claim **8**, wherein the latching mechanism comprises:

a pivot block;

a lock pin disposed at one end of the pivot block;

a cam portion formed along a portion of the bail, wherein selective movement of the bail to a second predetermined position causes the cam portion to exert a force against the pivot block that causes the lock pin to engage with a corresponding recess formed within the host port when the module is received within the port.

10. An electronic module as defined in claim **8**, wherein the module is an opto-electronic transceiver, and the cable connector is an optical cable connector.

11. An electronic module as defined in claim **8**, further comprising means for biasing the latching mechanism to latch the module within the port.

12. An electronic module as defined in claim **11**, wherein the biasing means is comprised of a leaf spring formed as a portion of a housing that at least partially encloses the base portion.

13. An opto-electronic transceiver module capable of being selectively received within a port of a host device, the module comprising:

a base portion that supports a printed circuit board capable of electrically interfacing with the host device when the module is operatively received within the port;

at least one receptacle capable of physically receiving and interfacing with a corresponding optical communications connector;

a housing forming an interior portion that at least partially encloses the base portion;

a pivot block, the pivot block being rotatably supported by the base portion about a pivot axis;

a locking pin disposed at a first end of the pivot block, and a cam follower surface formed on the pivot block; and

a bail having a cam portion, the cam portion being operatively engaged with the cam follower surface so that movement of the bail cause rotation of the pivot block about a pivot axis and corresponding movement of the locking pin to a latched or an unlatched position.

14. An opto-electronic transceiver module as defined in claim **13**, wherein the locking pin is prevented from being moved from the unlatched position when the optical communications connector is received within the receptacle.

15. An opto-electronic transceiver module as defined in claim **13**, wherein the bail includes a main body portion that forms a lever capable of removing the module from the port by exerting a pulling force on the lever when the locking pin is in the unlatched position.

16. An opto-electronic transceiver module as defined in claim **13**, wherein the bail includes a main body portion through which passes the optical communications connector when the connector is operatively received within the receptacle.

17. An opto-electronic transceiver module as defined in claim **13**, further comprising means for biasing the locking pin to the latched position.

18. An opto-electronic transceiver module as defined in claim **17**, wherein the biasing means is comprised of a leaf spring.

* * * * *