INTERNATIONAL TELECOMMUNICATION UNION

ITU-T

TELECOMMUNICATION
STANDARDIZATION SECTOR
OF ITU

G.984.2

(03/2003)

SERIES G: TRANSMISSION SYSTEMS AND MEDIA, DIGITAL SYSTEMS AND NETWORKS

Digital sections and digital line system – Optical line systems for local and access networks

---

Gigabit-capable Passive Optical Networks (GPON): Physical Media Dependent (PMD) layer specification

ITU-T Recommendation G.984.2

Nokia of America Corporation
IPR2023-00960, Ex. 1022
AT&T Ex. 1022
Ex. 1022.001

TU-T G-SERIES RECOMMENDATIONS

TRANSMISSION SYSTEMS AND MEDIA, DIGITAL SYSTEMS AND NETWORKS

INTERNATIONAL TELEPHONE CONNECTIONS AND CIRCUITS	G.100–G.199
GENERAL CHARACTERISTICS COMMON TO ALL ANALOGUE CARRIER-TRANSMISSION SYSTEMS	G.200–G.299
INDIVIDUAL CHARACTERISTICS OF INTERNATIONAL CARRIER TELEPHONE SYSTEMS ON METALLIC LINES	G.300–G.399
GENERAL CHARACTERISTICS OF INTERNATIONAL CARRIER TELEPHONE SYSTEMS ON RADIO-RELAY OR SATELLITE LINKS AND INTERCONNECTION WITH METALLIC LINES	G.400–G.449
COORDINATION OF RADIOTELEPHONY AND LINE TELEPHONY	G.450–G.499
TESTING EQUIPMENTS	G.500–G.599
TRANSMISSION MEDIA CHARACTERISTICS	G.600–G.699
DIGITAL TERMINAL EQUIPMENTS	G.700–G.799
DIGITAL NETWORKS	G.800–G.899
DIGITAL SECTIONS AND DIGITAL LINE SYSTEM	G.900–G.999
General	G.900–G.909
Parameters for optical fibre cable systems	G.910–G.919
Digital sections at hierarchical bit rates based on a bit rate of 2048 kbit/s	G.920–G.929
Digital line transmission systems on cable at non-hierarchical bit rates	G.930–G.939
Digital line systems provided by FDM transmission bearers	G.940–G.949
Digital line systems	G.950–G.959
Digital section and digital transmission systems for customer access to ISDN	G.960–G.969
Optical fibre submarine cable systems	G.970–G.979
Optical line systems for local and access networks	**G.980–G.989**
Access networks	G.990–G.999
QUALITY OF SERVICE AND PERFORMANCE - GENERIC AND USER-RELATED ASPECTS	G.1000–G.1999
TRANSMISSION MEDIA CHARACTERISTICS	G.6000–G.6999
DIGITAL TERMINAL EQUIPMENTS	G.7000–G.7999
DIGITAL NETWORKS	G.8000–G.8999

For further details, please refer to the list of ITU-T Recommendations.

Nokia of America Corporation
IPR2023-00960, Ex. 1022
AT&T Ex. 1022
Ex. 1022.002

ITU-T Recommendation G.984.2

Gigabit-capable Passive Optical Networks (GPON): Physical Media Dependent (PMD) layer specification

Summary

This Recommendation describes a flexible optical fibre access network capable of supporting the bandwidth requirements of business and residential services, and covers systems with nominal line rates of 1244.160 Mbit/s and 2488.320 Mbit/s in the downstream direction and 155.520 Mbit/s, 622.080 Mbit/s, 1244.160 Mbit/s and 2488.320 Mbit/s in the upstream direction. Both symmetrical and asymmetrical (upstream/downstream) Gigabit-capable Passive Optical Network (GPON) systems are described. This Recommendation proposes the physical layer requirements and specifications for the Physical Media Dependent (PMD) layer. The Transmission Convergence (TC) layer and ranging protocol for GPON systems are described in a different ITU-T Recommendation.

This Recommendation describes a system that represents an evolutionary development from the system described in ITU-T Rec. G.983.1. To the greatest extent possible, this Recommendation maintains the requirements of ITU-T Rec. G.983.1 to insure maximal continuity with existing systems and optical fibre infrastructure.

Source

ITU-T Recommendation G.984.2 was approved by ITU-T Study Group 15 (2001-2004) under the ITU-T Recommendation A.8 procedure on 16 March 2003.

Nokia of America Corporation
IPR2023-00960, Ex. 1022
AT&T Ex. 1022
Ex. 1022.003

FOREWORD

The International Telecommunication Union (ITU) is the United Nations specialized agency in the field of telecommunications. The ITU Telecommunication Standardization Sector (ITU-T) is a permanent organ of ITU. ITU-T is responsible for studying technical, operating and tariff questions and issuing Recommendations on them with a view to standardizing telecommunications on a worldwide basis.

The World Telecommunication Standardization Assembly (WTSA), which meets every four years, establishes the topics for study by the ITU-T study groups which, in turn, produce Recommendations on these topics.

The approval of ITU-T Recommendations is covered by the procedure laid down in WTSA Resolution 1.

In some areas of information technology which fall within ITU-T's purview, the necessary standards are prepared on a collaborative basis with ISO and IEC.

NOTE

In this Recommendation, the expression "Administration" is used for conciseness to indicate both a telecommunication administration and a recognized operating agency.

Compliance with this Recommendation is voluntary. However, the Recommendation may contain certain mandatory provisions (to ensure e.g. interoperability or applicability) and compliance with the Recommendation is achieved when all of these mandatory provisions are met. The words "shall" or some other obligatory language such as "must" and the negative equivalents are used to express requirements. The use of such words does not suggest that compliance with the Recommendation is required of any party.

INTELLECTUAL PROPERTY RIGHTS

ITU draws attention to the possibility that the practice or implementation of this Recommendation may involve the use of a claimed Intellectual Property Right. ITU takes no position concerning the evidence, validity or applicability of claimed Intellectual Property Rights, whether asserted by ITU members or others outside of the Recommendation development process.

As of the date of approval of this Recommendation, ITU had not received notice of intellectual property, protected by patents, which may be required to implement this Recommendation. However, implementors are cautioned that this may not represent the latest information and are therefore strongly urged to consult the TSB patent database.

© ITU 2003

All rights reserved. No part of this publication may be reproduced, by any means whatsoever, without the prior written permission of ITU.

Nokia of America Corporation
IPR2023-00960, Ex. 1022
AT&T Ex. 1022
Ex. 1022.004

CONTENTS

		Page
1	Scope	1
2	References	1
3	Definitions	2
4	Abbreviations	2
5	Architecture of the optical access network	3
6	Services	4
7	User network interface and service node interface	4
8	Optical network requirements	4
8.1	Layered structure of optical network	4
8.2	Physical medium dependent layer requirements for the GPON	4
8.3	Interaction between GPON PMD layer and TC layer	23
Appendix I – Allocation of the physical layer overhead time		25
Appendix II – Description and examples of power levelling mechanism		27
II.1	Introduction	27
II.2	ONU levels	27
II.3	Thresholds at OLT	28
II.4	Power detection	29

Nokia of America Corporation
IPR2023-00960, Ex. 1022
AT&T Ex. 1022
Ex. 1022.005

ITU-T Recommendation G.984.2

Gigabit-capable Passive Optical Networks (GPON): Physical Media Dependent (PMD) layer specification

1 Scope

This Recommendation is intended to describe flexible access networks using optical fibre technology. The focus is primarily on a network supporting services with bandwidth requirements ranging from that of voice to Gigabit-per-second data services. Also included are distributive services.

This Recommendation describes characteristics of the PMD layer of an Optical Access Network (OAN) with the capability of transporting various services between the user-network interface and the Service node interface.

The OAN dealt within this Recommendation should enable the network operator to provide a flexible upgrade to meet future customer requirements, in particular, in the area of the Optical Distribution Network (ODN). The ODN considered is based on a point-to-multipoint tree and branch option.

This Recommendation concentrates on the fibre issues: the copper issues of hybrid systems are described elsewhere, e.g., xDSL Recommendations (G.99x-series).

This Recommendation focuses on additions to and modifications of earlier members of the G.983.x series, which describe an architecture based on ATM over a Passive Optical Network. The purpose of the additions and modifications are to support higher data rates, especially for the transport of data services.

This Recommendation proposes the physical layer requirements and specifications for the PMD layer of a Gigabit-capable Passive Optical Network (GPON). TC layer and ranging protocol specifications for GPON systems are described in a different ITU-T Recommendation.

2 References

The following ITU-T Recommendations and other references contain provisions which, through reference in this text, constitute provisions of this Recommendation. At the time of publication, the editions indicated were valid. All Recommendations and other references are subject to revision; users of this Recommendation are therefore encouraged to investigate the possibility of applying the most recent edition of the Recommendations and other references listed below. A list of the currently valid ITU-T Recommendations is regularly published. The reference to a document within this Recommendation does not give it, as a stand-alone document, the status of a Recommendation.

[1] ITU-T Recommendation G.652 (2003), *Characteristics of a single-mode optical fibre cable*.

[2] ITU-T Recommendation G.957 (1999), *Optical interfaces for equipments and systems relating to the synchronous digital hierarchy*.

[3] ITU-T Recommendation G.982 (1996), *Optical access networks to support services up to the ISDN primary rate or equivalent bit rates*.

[4] ITU-T Recommendation G.983.1 (1998), *Broadband optical access systems based on Passive Optical Networks (PON)*.

[5] ITU-T Recommendation G.983.3 (2001), *A broadband optical access system with increased service capability by wavelength allocation*.

Nokia of America Corporation
IPR2023-00960, Ex. 1022
AT&T Ex. 1022
Ex. 1022.007

[6] ITU-T Recommendation G.984.1 (2003), *Gigabit-capable Passive Optical Networks (GPON): General characteristics*.

3 Definitions

This Recommendation makes frequent use of the defined terms found in ITU-T Recs G.983.1 and G.983.3. For convenience, the main definitions related to the GPON PMD layer are reported in this clause.

3.1 Optical Access Network (OAN): The set of access links sharing the same network-side interfaces and supported by optical access transmission systems. The OAN may include a number of ODNs connected to the same OLT.

3.2 Optical Distribution Network (ODN): An ODN provides the optical transmission means from the OLT towards the users, and vice versa. It utilizes passive optical components.

3.3 Optical Line Termination (OLT): An OLT provides the network-side interface of the OAN, and is connected to one or more ODNs.

3.4 Optical Network Termination (ONT): An ONU used for FTTH and includes the User Port function.

3.5 Optical Network Unit (ONU): An ONU provides (directly or remotely) the user-side interface of the OAN, and is connected to the ODN.

3.6 Time Division Multiple Access (TDMA): Transmission technique involving the multiplexing of many time slots onto the same time payload.

3.7 Wavelength Division Multiplexing (WDM): Bidirectional multiplexing using different optical wavelength for up and downstream signals.

4 Abbreviations

This Recommendation uses the following abbreviations:

APD	Avalanche Photodiode
ATM	Asynchronous Transfer Mode
BER	Bit Error Ratio
B-ISDN	Broadband Integrated Services Digital Network
CID	Consecutive Identical Digit
DFB	Distributed FeedBack laser
DSL	Digital Subscriber Line
E/O	Electrical/Optical
FEC	Forward Error Correction
FTTH	Fibre to the Home
GPON	Gigabit-capable Passive Optical Network
ISDN	Integrated Services Digital Network
MLM	Multi-Longitudinal Mode
MPN	Mode Partition Noise
NRZ	Non Return to Zero

Nokia of America Corporation
IPR2023-00960, Ex. 1022
AT&T Ex. 1022
Ex. 1022.008

O/E	Optical/Electrical
OAN	Optical Access Network
ODF	Optical Distribution Frame
ODN	Optical Distribution Network
OLT	Optical Line Termination
ONT	Optical Network Termination
ONU	Optical Network Unit
ORL	Optical Return Loss
PIN	Photodiode without internal avalanche
PON	Passive Optical Network
PRBS	Pseudo Random Bit Sequence
RMS	Root Mean Square
SDH	Synchronous Digital Hierarchy
SLM	Single-Longitudinal Mode
SNI	Service Node Interface
SOA	Semiconductor Optical Amplifier
TC	Transmission Convergence
TDM	Time Division Multiplexing
TDMA	Time Division Multiple Access
UI	Unit Interval
UNI	User Network Interface
WDM	Wavelength Division Multiplexing

5 Architecture of the optical access network

See ITU-T Rec. G.983.1. For convenience, Figure 5/G.983.1 is reproduced below.

Nokia of America Corporation
IPR2023-00960, Ex. 1022
AT&T Ex. 1022
Ex. 1022.009

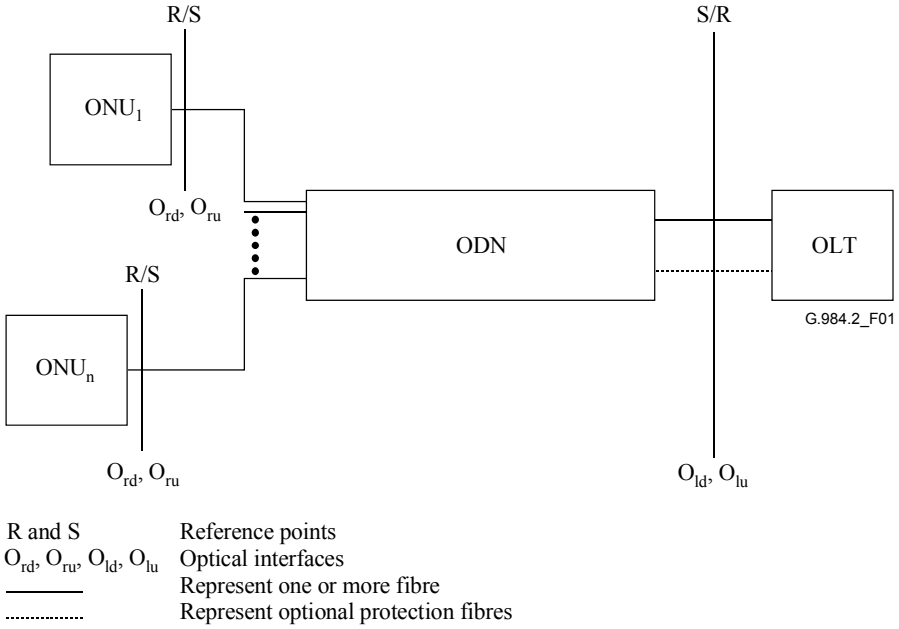

Figure 1/G.984.2 – Generic physical configuration of the optical distribution network (reproduced from Figure 5/G.983.1)

The two directions for optical transmission in the ODN are identified as follows:

– downstream direction for signals travelling from the OLT to the ONU(s);

– upstream direction for signals travelling from the ONU(s) to the OLT.

Transmission in downstream and upstream directions can take place on the same fibre and components (duplex/diplex working) or on separate fibres and components (simplex working).

6 Services

See ITU-T Rec. G.984.1

7 User network interface and service node interface

See ITU-T Rec. G.984.1.

8 Optical network requirements

8.1 Layered structure of optical network

See ITU-T Recs G.983.1 and G.983.3.

8.2 Physical medium dependent layer requirements for the GPON

8.2.1 Digital signal nominal bit rate

The transmission line rate should be a multiple of 8 kHz. The target standardized system will have nominal line rates (downstream/upstream) of:

- 1244.16 Mbit/s/155.52 Mbit/s,
- 1244.16 Mbit/s/622.08 Mbit/s,
- 1244.16 Mbit/s/1244.16 Mbit/s,
- 2488.32 Mbit/s/155.52 Mbit/s,

Nokia of America Corporation
IPR2023-00960, Ex. 1022
AT&T Ex. 1022
Ex. 1022.010

- 2488.32 Mbit/s/622.08 Mbit/s,
- 2488.32 Mbit/s/1244.16 Mbit/s,
- 2488.32 Mbit/s/2488.32 Mbit/s.

Parameters to be defined are categorized by downstream and upstream, and nominal bit rate as shown in Table 1.

Table 1/G.984.2 – Relation between parameter categories and tables

Transmission direction	Nominal bit rate	Table
Downstream	1244.16 Mbit/s	Table 2b (downstream, 1244 Mbit/s)
	2488.32 Mbit/s	Table 2c (downstream, 2488 Mbit/s)
Upstream	155.52 Mbit/s	Table 2d (upstream, 155 Mbit/s)
	622.08 Mbit/s	Table 2e (upstream, 622 Mbit/s)
	1244.16 Mbit/s	Table 2f-1 (upstream, 1244 Mbit/s) Table 2f-2 (upstream, 1244 Mbit/s)
	2488.32 Mbit/s	Table 2g-1 (upstream, 2488 Mbit/s) Table 2g-2 (upstream, 2488 Mbit/s)

All parameters are specified as follows, and shall be in accordance with Table 2a (ODN) and Tables 2b through 2g-2. These tables are generally called Table 2 in this Recommendation. There is a separate type of ONU for each combination of upstream bit-rate, downstream bit-rate, and optical path loss Class (Class A, B, or C as defined in ITU-T Rec. G.982).

All parameter values specified are worst-case values, assumed to be met over the range of standard operating conditions (i.e., temperature and humidity ranges), and they include ageing effects. The parameters are specified relative to an optical section design objective of a Bit Error Ratio (BER) not worse than 1×10^{-10} for the extreme case of optical path attenuation and dispersion conditions.

In particular, the values in this Recommendation, in Tables 2b through 2g-2, are valid for the cases without an Enhancement Band, as described in ITU-T Rec. G.983.3. For GPONs with Enhancement Band applications, a new set of parameters must be defined, together with requirements for isolation between the different wavelength bands. This can be described in a separate Recommendation, having the same relation to this Recommendation as ITU-T Rec. G.983.3 has to ITU-T Rec. G.983.1. However, the optical wavelength specified in this Recommendation for the downstream direction is compliant with the ITU-T Rec. G.983.3, in order to allow a smooth integration of the Enhancement Band in the future.

8.2.2 Physical media and transmission method

8.2.2.1 Transmission medium

This Recommendation is based on the fibre described in ITU-T Rec. G.652.

8.2.2.2 Transmission direction

The signal is transmitted both upstream and downstream through the transmission medium.

8.2.2.3 Transmission methodology

Bidirectional transmission is accomplished by use of either wavelength division multiplexing (WDM) technique on a single fibre, or unidirectional transmission over two fibres (see 8.2.5).

8.2.3 Bit rate

This clause deals with bit-rate requirements for the GPON.

Nokia of America Corporation
IPR2023-00960, Ex. 1022
AT&T Ex. 1022
Ex. 1022.011

8.2.3.1 Downstream

The nominal bit rate of the OLT-to-ONU signal is 1244.16, or 2488.32 Mbit/s. When the OLT and the end office are in their normal operating state, this rate is traceable to a Stratum-1 clock (accuracy of 1×10^{-11}). When the end office is in its free-running mode, the rate of the downstream signal is traceable to a Stratum-3 clock (accuracy of 4.6×10^{-6}). When the OLT is in its free-running mode, the accuracy of the downstream signal is that of a Stratum-4 clock (3.2×10^{-5}).

8.2.3.2 Upstream

The nominal bit rate of the ONU-to-OLT signal is 155.52, 622.08, 1244.16, or 2488.32 Mbit/s. When in one of its operating states and given a grant, the ONU shall transmit its signal with an accuracy equal to that of the received downstream signal. The ONU shall not transmit any signal when not in one of its operating states, or when not given a grant.

8.2.4 Line code

Downstream and upstream: NRZ coding.

Scrambling method not defined at PMD layer.

Convention used for optical logic level is:

– high level of light emission for a binary ONE;

– low level of light emission for a binary ZERO.

8.2.5 Operating wavelength

8.2.5.1 Downstream direction

The operating wavelength range for the downstream direction on single fibre systems shall be 1480-1500 nm.

The operating wavelength range for the downstream direction on two fibre systems shall be 1260-1360 nm.

8.2.5.2 Upstream direction

The operating wavelength range for the upstream direction shall be 1260-1360 nm.

8.2.6 Transmitter at O_{ld} and O_{ru}

All parameters are specified as follows, and shall be in accordance with Table 2.

8.2.6.1 Source type

See 8.2.6.1/G.983.1.

8.2.6.2 Spectral characteristics

See 8.2.6.2/G.983.1.

8.2.6.3 Mean launched power

The mean launched power at O_{ld} and O_{ru} is the average power of a pseudo-random data sequence coupled into the fibre by the transmitter. It is given as a range to allow for some cost optimization and to cover all allowances for operation under standard operating conditions, transmitter connector degradation, measurement tolerances, and ageing effects.

In operating state, the lower figure is the minimum power which shall be provided and the higher one is the power which shall never be exceeded.

NOTE – The measurement of the launched power at the O_{ru} optical interface shall take into account the bursty nature of the upstream traffic transmitted by the ONUs.

Nokia of America Corporation
IPR2023-00960, Ex. 1022
AT&T Ex. 1022
Ex. 1022.012

8.2.6.3.1 Launched optical power without input to the transmitter

In the upstream direction, the ONU transmitter should launch no power into the fibre in all slots which are not assigned to that ONU. However, an optical power level less than or equal to the launched power without input to the transmitter, specified in Tables 2d through 2g-1, is allowed. The ONU shall also meet this requirement during the Guard time of slots that are assigned to it, with the exception of the last Tx Enable bits which may be used for laser pre-bias, and the Tx Disable bits immediately following the assigned cell, during which the output falls to zero. The maximum launched power level allowed during laser pre-bias is the zero level corresponding to the extinction ratio specified in Tables 2d through 2g-1.

The specification of the maximum number of Tx Enable and Tx Disable bits, for each upstream bit rate, is provided in the series of Tables 2d to 2g-1.

8.2.6.4 Minimum extinction ratio

The convention adopted for optical logic level is:

– high level of light emission for a logical "1";

– low level of light emission for a logical "0".

The extinction ratio (EX) is defined as:

$$EX = 10 \log_{10} (A/B)$$

where A is the average optical power level at the centre of the logical "1" and B is the average optical power level at the centre of the logical "0".

The extinction ratio for the upstream direction burst mode signal is applied to from the first bit of the preamble to the last bit of the burst signal inclusive. This does not apply to eventual procedures related to the optical power set-up.

8.2.6.5 Maximum reflectance of equipment, measured at transmitter wavelength

See 8.2.6.5/G.983.1.

8.2.6.6 Mask of transmitter eye diagram

See 8.2.6.6/G.983.1.

8.2.6.6.1 OLT transmitter

The parameters specifying the mask of the eye diagram are shown in Figure 2.

8.2.6.6.2 ONU transmitter

The parameters specifying the mask of the eye diagram are shown in Figure 3.

The mask of the eye diagram for the upstream direction burst mode signal is applied to from the first bit of the preamble to the last bit of the burst signal inclusive. This does not apply to eventual procedures related to the optical power set-up.

8.2.6.7 Tolerance to the reflected optical power

The specified transmitter performance must be met in the presence at S of the optical reflection level specified in Table 2.

8.2.7 Optical path between O_{ld}/O_{ru} and O_{rd}/O_{lu}

8.2.7.1 Attenuation range

See 8.2.7.1/G.983.1.

Nokia of America Corporation
IPR2023-00960, Ex. 1022
AT&T Ex. 1022
Ex. 1022.013

8.2.7.2 Minimum optical return loss of the cable plant at point R/S, including any connectors

See 8.2.7.2/G.983.1.

8.2.7.3 Maximum discrete reflectance between points S and R

See 8.2.7.3/G.983.1.

8.2.7.4 Dispersion

See 8.2.7.4/G.983.1.

8.2.8 Receiver at O_{rd} and O_{lu}

All parameters are specified as follows, and shall be in accordance with Table 2.

8.2.8.1 Minimum sensitivity

See 8.2.8.1/G.983.1.

8.2.8.2 Minimum overload

See 8.2.8.2/G.983.1.

8.2.8.3 Maximum optical path penalty

The receiver is required to tolerate an optical path penalty not exceeding 1 dB to account for total degradations due to reflections, intersymbol interference, mode partition noise, and laser chirp. In the upstream direction, the specified laser types in Table 2 produce less than 1 dB of optical path penalty over the ODN. As indicated in Note 5 of Tables 2e and 2f-1, an increase in the upstream optical path penalty due to dispersion at bit rates of 622 Mbit/s or above is acceptable, provided that any increase in optical path penalty over 1 dB is compensated by an increase of the minimum transmitted launch power, or an increase of the minimum receiver sensitivity.

8.2.8.4 Maximum logical reach

The maximum logical reach is defined as the maximum length that can be achieved for a particular transmission system independently from optical budget. It is measured in km and it is not limited by PMD parameters, but rather TC layer and implementation issues.

8.2.8.5 Maximum differential logical reach

The differential logical reach is the maximum difference in logical reach among all ONUs. It is measured in km and it is not limited by PMD parameters but rather TC layer and implementation issues.

8.2.8.6 Maximum reflectance of receiver equipment, measured at receiver wavelength

See 8.2.8.4/G.983.1.

8.2.8.7 Differential optical path loss

See 8.2.8.5/G.983.1.

8.2.8.8 Clock extraction capability

See 8.2.8.6/G.983.1.

8.2.8.9 Jitter performance

This clause deals with jitter requirements for optical interfaces at the GPON.

Nokia of America Corporation
IPR2023-00960, Ex. 1022
AT&T Ex. 1022
Ex. 1022.014

8.2.8.9.1 Jitter transfer

Jitter transfer specification applies only to ONU.

The jitter transfer function is defined as:

$$jitter\ transfer = 20\log_{10}\left[\frac{jitter\ on\ upstream\ signal\ UI}{jitter\ on\ downstream\ signal\ UI} \times \frac{down\ stream\ bit\ rate}{upstream\ bit\ rate}\right]$$

The jitter transfer function of an ONU shall be under the curve given in Figure 4, when input sinusoidal jitter up to the mask level in Figure 5 is applied, with the parameters specified in this figure for each bit rate.

8.2.8.9.2 Jitter tolerance

See 8.2.8.7.2/G.983.1.

8.2.8.9.3 Jitter generation

Jitter generation specification applies only to ONU.

An ONU shall not generate a peak to peak jitter more than 0.2 UI at bit rates of 155.52 or 622.08 Mbit/s, and not more than 0.33 UI peak to peak at 1244.16 Mbit/s, with no jitter applied to the downstream input and with a measurement bandwidth as specified in Tables 2d through 2g-1. The maximum peak-to-peak jitter allowed at 2488.32 Mbit/s and the related measurement frequency range is for further study.

8.2.8.10 Consecutive Identical Digit (CID) immunity

The OLT and the ONU shall have a CID immunity as specified in the series of Tables from 2b to 2g.

8.2.8.11 Tolerance to reflected power

See 8.2.8.9/G.983.1.

8.2.8.12 Transmission quality and error performance

See 8.2.8.10/G.983.1.

Nokia of America Corporation
IPR2023-00960, Ex. 1022
AT&T Ex. 1022
Ex. 1022.015

Table 2a/G.984.2 – Physical medium dependant layer parameters of ODN

Items	Unit	Specification
Fibre type (Note 1)	–	ITU-T Rec. G.652
Attenuation range (ITU-T Rec. G.982)	dB	Class A: 5-20 Class B: 10-25 Class C: 15-30
Differential optical path loss	dB	15
Maximum optical path penalty	dB	1 (see Note 5 in Tables 2e and 2f-1)
Maximum logical reach	km	60 (Note 2)
Maximum differential logical reach	km	20
Maximum fibre distance between S/R and R/S points	km	20 (10 as option)
Minimum supported split ratio	–	Restricted by path loss PON with passive splitters (16, 32 or 64 way split)
Bidirectional transmission	–	1-fibre WDM or 2-fibre
Maintenance wavelength	nm	to be defined
NOTE 1 – For future extended reach (> 20 Km), the use of different types of fibre is for further study, for a future PMD specification. NOTE 2 – This is the maximum distance managed by the higher layers of the system (MAC, TC, Ranging), in view of a future PMD specification.		

Table 2b/G.984.2 – Optical interface parameters of 1244 Mbit/s downstream direction

Items	Unit	Single fibre			Dual fibre		
		OLT Transmitter (optical interface O_{ld})					
Nominal bit rate	Mbit/s	1244.16			1244.16		
Operating wavelength	nm	1480-1500			1260-1360		
Line code	–	Scrambled NRZ			Scrambled NRZ		
Mask of the transmitter eye diagram	–	Figure 2			Figure 2		
Maximum reflectance of equipment, measured at transmitter wavelength	dB	NA			NA		
Minimum ORL of ODN at O_{lu} and O_{ld} (Notes 1 and 2)	dB	more than 32			more than 32		
ODN Class		A	B	C	A	B	C
Mean launched power MIN	dBm	–4	+1	+5	–4	+1	+5
Mean launched power MAX	dBm	+1	+6	+9	+1	+6	+9
Launched optical power without input to the transmitter	dBm	NA			NA		
Extinction ratio	dB	more than 10			more than 10		
Tolerance to the transmitter incident light power	dB	more than –15			more than –15		

Nokia of America Corporation
IPR2023-00960, Ex. 1022
AT&T Ex. 1022
Ex. 1022.016

Table 2b/G.984.2 – Optical interface parameters of 1244 Mbit/s downstream direction

Items	Unit	Single fibre			Dual fibre		
If MLM Laser – Maximum RMS width	nm	NA			NA		
If SLM Laser – Maximum –20 dB width (Note 3)	nm	1			1		
If SLM Laser – Minimum side mode suppression ratio	dB	30			30		
ONU Receiver (optical interface O_{rd})							
Maximum reflectance of equipment, measured at receiver wavelength	dB	less than –20			less than –20		
Bit error ratio	–	less than 10^{-10}			less than 10^{-10}		
ODN Class		A	B	C	A	B	C
Minimum sensitivity	dBm	–25	–25	–26	–25	–25	–25
Minimum overload	dBm	–4	–4	–4 (Note 4)	–4	–4	–4
Consecutive identical digit immunity	bit	more than 72			more than 72		
Jitter tolerance	–	Figure 5			Figure 5		
Tolerance to the reflected optical power	dB	less than 10			less than 10		

NOTE 1 – The value of "minimum ORL of ODN at point O_{ru} and O_{rd}, and O_{lu} and O_{ld}" should be more than 20 dB in optional cases which are described in Appendix I/G.983.1.

NOTE 2 – The values on ONU transmitter reflectance for the case that the value of "minimum ORL of ODN at point O_{ru} and O_{rd}, and O_{lu} and O_{ld}" is 20 dB are described in Appendix II/G.983.1.

NOTE 3 – Values of maximum –20 dB width, and minimum side mode suppression ratio are referred to in ITU-T Rec. G.957.

NOTE 4 – While only –6 dBm overload is required to support the class C ODN, a –4 dBm overload value has been chosen here for ONU receiver uniformity across all ODN classes.

Table 2c/G.984.2 – Optical interface parameters of 2488 Mbit/s downstream direction

Items	Unit	Single fibre			Dual fibre		
OLT Transmitter (optical interface O_{ld})							
Nominal bit rate	Mbit/s	2488.32			2488.32		
Operating wavelength	nm	1480-1500			1260-1360		
Line code	–	Scrambled NRZ			Scrambled NRZ		
Mask of the transmitter eye diagram	–	Figure 2			Figure 2		
Maximum reflectance of equipment, measured at transmitter wavelength	dB	NA			NA		
Minimum ORL of ODN at O_{lu} and O_{ld} (Notes 1 and 2)	dB	more than 32			more than 32		
ODN Class		A	B	C	A	B	C
Mean launched power MIN	dBm	0	+5	+3 (Note 4)	0	+5	+3 (Note 4)

Nokia of America Corporation
IPR2023-00960, Ex. 1022
AT&T Ex. 1022
Ex. 1022.017

Table 2c/G.984.2 – Optical interface parameters of 2488 Mbit/s downstream direction

Items	Unit	Single fibre			Dual fibre		
Mean launched power MAX	dBm	+4	+9	+7 (Note 4)	+4	+9	+7 (Note 4)
Launched optical power without input to the transmitter	dBm	NA			NA		
Extinction ratio	dB	more than 10			more than 10		
Tolerance to the transmitter incident light power	dB	more than –15			more than –15		
If MLM Laser – Maximum RMS width	nm	NA			NA		
If SLM Laser – Maximum –20 dB width (Note 3)	nm	1			1		
If SLM Laser – Minimum side mode suppression ratio	dB	30			30		
ONU Receiver (optical interface O_{rd})							
Maximum reflectance of equipment, measured at receiver wavelength	dB	less than –20			less than –20		
Bit error ratio	–	less than 10^{-10}			less than 10^{-10}		
ODN Class		A	B	C	A	B	C
Minimum sensitivity	dBm	–21	–21	–28 (Note 4)	–21	–21	–28 (Note 4)
Minimum overload	dBm	–1	–1	–8 (Note 4)	–1	–1	–8 (Note 4)
Consecutive identical digit immunity	bit	more than 72			more than 72		
Jitter tolerance	–	Figure 5			Figure 5		
Tolerance to the reflected optical power	dB	less than 10			less than 10		

NOTE 1 – The value of "minimum ORL of ODN at point O_{ru} and O_{rd}, and O_{lu} and O_{ld}" should be more than 20 dB in optional cases which are described in Appendix I/G.983.1.

NOTE 2 – The values on ONU transmitter reflectance for the case that the value of "minimum ORL of ODN at point O_{ru} and O_{rd}, and O_{lu} and O_{ld}" is 20 dB are described in Appendix II/G.983.1.

NOTE 3 – Values of maximum –20 dB width, and minimum side mode suppression ratio are referred to in ITU-T Rec. G.957.

NOTE 4 – These values assume the use of a high-power DFB laser for the OLT Transmitter and of an APD-based receiver for the ONU. Taking future developments of SOA technology into account, a future alternative implementation could use a DFB laser + SOA, or a higher power laser diode, for the OLT Transmitter, allowing a PIN-based receiver for the ONU. The assumed values would then be (conditional to eye-safety regulation and practice):

Mean launched power MAX OLT Transmitter: +12 dBm

Mean launched power MIN OLT Transmitter: +8 dBm

Minimum sensitivity ONU Receiver: –23 dBm

Minimum overload ONU Receiver: –3 dBm

Nokia of America Corporation
IPR2023-00960, Ex. 1022
AT&T Ex. 1022
Ex. 1022.018

Table 2d/G.984.2 – Optical interface parameters of 155 Mbit/s upstream direction

Items	Unit	Single fibre			Dual fibre		
ONU Transmitter (optical interface O_{ru})							
Nominal bit rate	Mbit/s	155.52			155.52		
Operating wavelength	nm	1260-1360			1260-1360		
Line code	–	Scrambled NRZ			Scrambled NRZ		
Mask of the transmitter eye diagram	–	Figure 3			Figure 3		
Maximum reflectance of equipment, measured at transmitter wavelength	dB	less than –6			less than –6		
Minimum ORL of ODN at O_{ru} and O_{rd} (Notes 1 and 2)	dB	more than 32			more than 32		
ODN Class		A	B	C	A	B	C
Mean launched power MIN	dBm	–6	–4	–2	–6	–4	–2
Mean launched power MAX	dBm	–0	+2	+4	–1	+1	+3
Launched optical power without input to the transmitter	dBm	less than Min sensitivity –10			less than Min sensitivity –10		
Maximum Tx Enable (Note 3)	bits	2			2		
Maximum Tx Disable (Note 3)	bits	2			2		
Extinction ratio	dB	more than 10			more than 10		
Tolerance to the transmitter incident light power	dB	more than –15			more than –15		
If MLM Laser – Maximum RMS width	nm	5.8			5.8		
If SLM Laser – Maximum –20 dB width (Note 4)	nm	1			1		
If SLM Laser – Minimum side mode suppression ratio	dB	30			30		
Jitter transfer	–	Figure 4			Figure 4		
Jitter generation from 0.5 kHz to 1.3 MHz	UI p-p	0.2			0.2		
OLT Receiver (optical interface O_{lu})							
Maximum reflectance of equipment, measured at receiver wavelength	dB	less than –20			less than –20		
Bit error ratio	–	less than 10^{-10}			less than 10^{-10}		
ODN Class		A	B	C	A	B	C
Minimum sensitivity	dBm	–27	–30	–33	–27	–30	–33
Minimum overload	dBm	–5	–8	–11	–6	–9	–12

Nokia of America Corporation
IPR2023-00960, Ex. 1022
AT&T Ex. 1022
Ex. 1022.019

Table 2d/G.984.2 – Optical interface parameters of 155 Mbit/s upstream direction

Items	Unit	Single fibre	Dual fibre
Consecutive identical digit immunity	bit	more than 72	more than 72
Jitter tolerance	–	NA	NA
Tolerance to reflected optical power	dB	less than 10	Less than 10
NOTE 1 – The value of "minimum ORL of ODN at point O_{ru} and O_{rd}, and O_{lu} and O_{ld}" should be more than 20 dB in optional cases which are described in Appendix I/G.983.1. NOTE 2 – The values of ONU transmitter reflectance for the case that the value of "minimum ORL of ODN at point O_{ru} and O_{rd}, and O_{lu} and O_{ld}" is 20 dB are described in Appendix II/G.983.1. NOTE 3 – As defined in 8.2.6.3.1. NOTE 4 – Values of maximum –20 dB width, and minimum side mode suppression ratio are referred to in ITU-T Rec. G.957.			

Table 2e/G.984.2 – Optical interface parameters of 622 Mbit/s upstream direction

Items	Unit	Single fibre			Dual fibre		
		ONU Transmitter (optical interface O_{ru})					
Nominal bit rate	Mbit/s	622.08			622.08		
Operating wavelength (Note 5)	nm	MLM Type 1 or SLM: 1260~1360 MLM type 2: 1280~1350 MLM type 3: 1288~1338			MLM Type 1 or SLM: 1260~1360 MLM type 2: 1280~1350 MLM type 3: 1288~1338		
Line code	–	Scrambled NRZ			Scrambled NRZ		
Mask of the transmitter eye diagram	–	Figure 3			Figure 3		
Maximum reflectance of equipment, measured at transmitter wavelength	dB	less than –6			less than –6		
Minimum ORL of ODN at O_{ru} and O_{rd} (Notes 1 and 2)	dB	more than 32			more than 32		
ODN Class		A	B	C	A	B	C
Mean launched power MIN	dBm	–6	–1	–1	–6	–1	–1
Mean launched power MAX	dBm	–1	+4	+4	–1	+4	+4
Launched optical power without input to the transmitter	dBm	less than Min sensitivity –10			less than Min sensitivity –10		
Maximum Tx Enable (Note 3)	bits	8			8		
Maximum Tx Disable (Note 3)	bits	8			8		
Extinction ratio	dB	more than 10			more than 10		
Tolerance to transmitter incident light power	dB	more than –15			more than –15		
MLM Laser – Maximum RMS width (Note 5)	nm	MLM type 1: 1.4 MLM type 2: 2.1 MLM type 3: 2.7			MLM type 1: 1.4 MLM type 2: 2.1 MLM type 3: 2.7		

Nokia of America Corporation
IPR2023-00960, Ex. 1022
AT&T Ex. 1022
Ex. 1022.020

Table 2e/G.984.2 – Optical interface parameters of 622 Mbit/s upstream direction

Items	Unit	Single fibre			Dual fibre		
SLM Laser – Maximum –20 dB width (Note 4)	nm	1			1		
If SLM Laser – Minimum side mode suppression ratio	dB	30			30		
Jitter transfer	–	Figure 4			Figure 4		
Jitter generation from 2.0 kHz to 5.0 MHz	UI p-p	0.2			0.2		
OLT Receiver (optical interface O_{lu})							
Maximum reflectance of equipment, measured at receiver wavelength	dB	less than –20			less than –20		
Bit error ratio	–	less than 10^{-10}			less than 10^{-10}		
ODN Class		A	B	C	A	B	C
Minimum sensitivity	dBm	–27	–27	–32	–27	–27	–32
Minimum overload	dBm	–6	–6	–11	–6	–6	–11
Consecutive identical digit immunity	bit	more than 72			more than 72		
Jitter tolerance	–	NA			NA		
Tolerance to the reflected optical power	dB	less than 10			less than 10		

NOTE 1 – The value of "minimum ORL of ODN at point O_{ru} and O_{rd}, and O_{lu} and O_{ld}" should be more than 20 dB in optional cases which are described in Appendix I/G.983.1.

NOTE 2 – The values of ONU transmitter reflectance for the case that the value of "minimum ORL of ODN at point O_{ru} and O_{rd}, and O_{lu} and O_{ld}" is 20 dB are described in Appendix II/G.983.1.

NOTE 3 – As defined in 8.2.6.3.1.

NOTE 4 – Values of maximum –20 dB width, and minimum side mode suppression ratio are referred to in ITU-T Rec. G.957.

NOTE 5 – Transmitter types meeting narrower spectral width specifications are allowed wider central wavelength ranges. The specified laser types produce less than 1 dB of optical path penalty over the ODN. Lasers with different optical parameters may be substituted provided that: 1) the total wavelength range does not exceed 1260~1360 nm, and 2) any increase in optical path penalty over 1 dB is compensated by an increase of the minimum transmitted launch power or an increase of the minimum receiver sensitivity.

Nokia of America Corporation
IPR2023-00960, Ex. 1022
AT&T Ex. 1022
Ex. 1022.021

Table 2f-1/G.984.2 – Optical interface parameters of 1244 Mbit/s upstream direction

Items	Unit	Single fibre			Dual fibre		
ONU Transmitter (optical interface O_{ru})							
Nominal bit rate	Mbit/s	1244.16			1244.16		
Operating wavelength	nm	1260-1360			1260-1360		
Line code	–	Scrambled NRZ			Scrambled NRZ		
Mask of the transmitter eye diagram	–	Figure 3			Figure 3		
Maximum reflectance of equipment, measured at transmitter wavelength	dB	less than –6			less than –6		
Minimum ORL of ODN at O_{ru} and O_{rd} (Notes 1 and 2)	dB	more than 32			more than 32		
ODN Class		A	B	C	A	B	C
Mean launched power MIN	dBm	–3 (Note 5)	–2	+2	–3 (Note 5)	–2	+2
Mean launched power MAX	dBm	+2 (Note 5)	+3	+7	+2 (Note 5)	+3	+7
Launched optical power without input to the transmitter	dBm	Less than Min sensitivity –10			less than Min sensitivity –10		
Maximum Tx Enable (Note 3)	bits	16			16		
Maximum Tx Disable (Note 3)	bits	16			16		
Extinction ratio	dB	more than 10			more than 10		
Tolerance to transmitter incident light power	dB	more than –15			more than –15		
MLM Laser – Maximum RMS width	nm	(Note 5)			(Note 5)		
SLM Laser – Maximum –20 dB width (Note 4)	nm	1			1		
If SLM Laser – Minimum side mode suppression ratio	dB	30			30		
Jitter transfer	–	Figure 4			Figure 4		
Jitter generation from 4.0 kHz to 10.0 MHz	UI p-p	0.33			0.33		
OLT Receiver (optical interface O_{lu})							
Maximum reflectance of equipment, measured at receiver wavelength	dB	less than –20			less than –20		
Bit error ratio	–	less than 10^{-10}			less than 10^{-10}		
ODN Class		A	B	C	A	B	C
Minimum sensitivity	dBm	–24 (Note 6)	–28	–29	–24 (Note 6)	–28	–29
Minimum overload	dBm	–3 (Note 6)	–7	–8	–3 (Note 6)	–7	–8

Nokia of America Corporation
IPR2023-00960, Ex. 1022
AT&T Ex. 1022
Ex. 1022.022

Table 2f-1/G.984.2 – Optical interface parameters of 1244 Mbit/s upstream direction

Items	Unit	Single fibre	Dual fibre
Consecutive identical digit immunity	Bit	more than 72	More than 72
Jitter tolerance	–	NA	NA
Tolerance to the reflected optical power	dB	less than 10	Less than 10

NOTE 1 – The value of "minimum ORL of ODN at point O_{ru} and O_{rd}, and O_{lu} and O_{ld}" should be more than 20 dB in optional cases which are described in Appendix I/G.983.1.

NOTE 2 – The values of ONU transmitter reflectance for the case that the value of "minimum ORL of ODN at point O_{ru} and O_{rd}, and O_{lu} and O_{ld}" is 20 dB are described in Appendix II/G.983.1.

NOTE 3 – As defined in 8.2.6.3.1.

NOTE 4 – Values of maximum –20 dB width, and minimum side mode suppression ratio are referred to in ITU-T Rec. G.957.

NOTE 5 – While MLM laser types are not applicable to support the full ODN fibre distance of Table 2a, such lasers can be used if the maximum ODN fibre distance between R/S and S/R is restricted to 10 km. The MLM laser types of Table 2e can be employed to support this restricted fibre distance at 1244.16 Mbit/s. These laser types are subject to the same conditions as indicated in Note 5 of Table 2e.

NOTE 6 – These values assume the use of a PIN-based receiver at the OLT for Class A. Depending on the amount of ONUs connected to the OLT, an alternative implementation from a cost point of view could be based on an APD-based receiver at the OLT, allowing it to use more economical lasers with lower fibre-coupled emitted power at the ONUs. In this case, the values for Class A would be:

Mean launched power MIN ONU Transmitter: –7 dBm

Mean launched power MAX ONU Transmitter: –2 dBm

Minimum sensitivity OLT Receiver: –28 dBm

Minimum overload OLT Receiver: –7 dBm

Nokia of America Corporation
IPR2023-00960, Ex. 1022
AT&T Ex. 1022
Ex. 1022.023

Table 2f-2/G.984.2 – Optical interface parameters of 1244 Mbit/s upstream direction, using power levelling mechanism at ONU Transmitter

Items	Unit	Single fibre			Dual fibre		
ONU Transmitter (optical interface O_{ru})							
ODN Class		A	B	C	A	B	C
Mean launched power MIN	dBm	–2 (Note 2)	–2	+2	–2 (Note 2)	–2	+2
Mean launched power MAX	dBm	+3 (Note 2)	+3	+7	+3 (Note 2)	+3	+7
OLT Receiver (optical interface O_{lu})							
ODN Class		A	B	C	A	B	C
Minimum sensitivity	dBm	–23 (Note 2)	–28	–29	–23 (Note 2)	–28	–29
Minimum overload	dBm	–8 (Note 2)	–13	–14	–8 (Note 2)	–13	–14

NOTE 1– This table only indicates the parameters of Table 2f-1 that change due to the application of the power levelling mechanism at ONU transmitter, namely the launched powers of the ONU transmitter and the sensitivity and overload of the OLT receiver. All other parameters and notes are identical to those in Table 2f-1.

NOTE 2 – These values assume the use of a PIN-based receiver at the OLT for Class A. Depending on the amount of ONUs connected to the OLT, an alternative implementation from a cost point of view could be based on an APD-based receiver at the OLT, allowing it to use more economical lasers with lower fibre-coupled emitted power at the ONUs. In this case, the values for Class A would be:

Mean launched power MIN ONU Transmitter: –7 dBm

Mean launched power MAX ONU Transmitter: –2 dBm

Minimum sensitivity OLT Receiver: –28 dBm

Minimum overload OLT Receiver: –10 dBm

The impact of power levelling is less, due to the restriction on the minimal power to be emitted for guaranteeing the eye-diagram.

Nokia of America Corporation
IPR2023-00960, Ex. 1022
AT&T Ex. 1022
Ex. 1022.024

Table 2g-1/G.984.2 – Optical interface parameters of 2488 Mbit/s upstream direction

Items	Unit	Single fibre			Dual fibre		
ONU Transmitter (optical interface O_{ru})							
Nominal bit rate	Mbit/s	2488.32			2488.32		
Operating wavelength	nm	1260-1360			1260-1360		
Line code	–	Scrambled NRZ			Scrambled NRZ		
Mask of the transmitter eye diagram	–	Figure 3			Figure 3		
Maximum reflectance of equipment, measured at transmitter wavelength	dB	FFS			FFS		
Minimum ORL of ODN at O_{ru} and O_{rd}	dB	FFS			FFS		
ODN Class		A	B	C	A	B	C
Mean launched power MIN	dBm	FFS	FFS	FFS	FFS	FFS	FFS
Mean launched power MAX	dBm	FFS	FFS	FFS	FFS	FFS	FFS
Launched optical power without input to the transmitter	dBm	FFS			FFS		
Maximum Tx Enable (Note 2)	bits	32			32		
Maximum Tx Disable (Note 2)	bits	32			32		
Extinction ratio	dB	FFS			FFS		
Tolerance to the transmitter incident light power	dB	FFS			FFS		
If MLM Laser – Maximum RMS width	nm	FFS			FFS		
If SLM Laser – Maximum –20 dB width	nm	FFS			FFS		
If SLM Laser – Minimum side mode suppression ratio	dB	FFS			FFS		
Jitter transfer	–	Figure 4			Figure 4		
Jitter generation (measurement frequency range is FFS)	UI p-p	FFS			FFS		
OLT Receiver (optical interface O_{lu})							
Maximum reflectance of equipment, measured at receiver wavelength	dB	FFS			FFS		
Bit error ratio	–	FFS			FFS		
ODN Class		A	B	C	A	B	C
Minimum sensitivity	dBm	FFS	FFS	FFS	FFS	FFS	FFS
Minimum overload	dBm	FFS	FFS	FFS	FFS	FFS	FFS
Consecutive identical digit immunity	Bit	FFS			FFS		
Jitter tolerance	–	FFS			FFS		
Tolerance to the reflected optical power	dB	FFS			FFS		
NOTE 1 – FFS = "For Further Study". NOTE 2 – As defined in 8.2.6.3.1.							

Nokia of America Corporation
IPR2023-00960, Ex. 1022
AT&T Ex. 1022
Ex. 1022.025

Table 2g-2/G.984.2 – Optical interface parameters of 2488 Mbit/s upstream direction, using power levelling mechanism at ONU Transmitter

Items	Unit	Single fibre			Dual fibre		
ONU Transmitter (optical interface O_{ru})							
ODN Class		A	B	C	A	B	C
Mean launched power MIN	dBm	FFS	FFS	FFS	FFS	FFS	FFS
Mean launched power MAX	dBm	FFS	FFS	FFS	FFS	FFS	FFS
OLT Receiver (optical interface O_{lu})							
ODN Class		A	B	C	A	B	C
Minimum sensitivity	dBm	FFS	FFS	FFS	FFS	FFS	FFS
Minimum overload	dBm	FFS	FFS	FFS	FFS	FFS	FFS
NOTE – This table only indicates the parameters of Table 2g-1 that change due to the application of the power levelling mechanism at ONU transmitter, namely the launched powers of the ONU transmitter and the sensitivity and overload of the OLT receiver. All other parameters and notes are identical to those in Table 2g-1.							

Nokia of America Corporation
IPR2023-00960, Ex. 1022
AT&T Ex. 1022
Ex. 1022.026

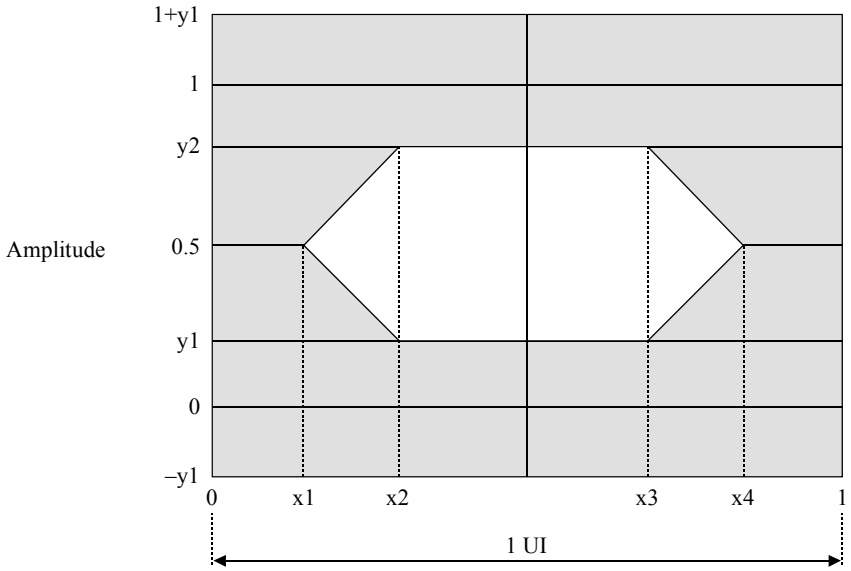

	1244.16 Mbit/s	2488.32 Mbit/s
x1/x4	0.28/0.72	---
x2/x3	0.40/0.60	---
x3 – x2	---	0.2
y1/y2	0.20/0.80	0.25/0.75

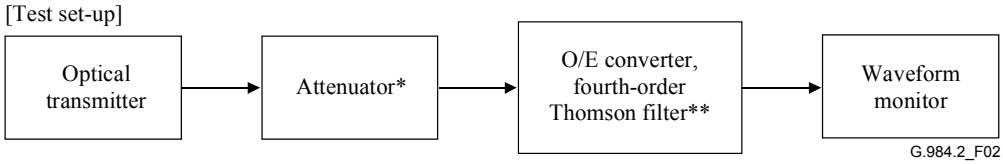

* Attenuator is used if necessary.
** Cut-off frequency (3 dB attenuation frequency) of the filter is 0.75 times output nominal bit rate.

NOTE – In the case of 2488.32 Mbit/s, x2 and x3 of the rectangular eye mask need not be equidistant with respect to the vertical axes at 0 UI and 1 UI. The extent of this deviation is for further study.

Figure 2/G.984.2 – Mask of the eye diagram for the downstream transmission signal

Nokia of America Corporation
IPR2023-00960, Ex. 1022
AT&T Ex. 1022
Ex. 1022.027

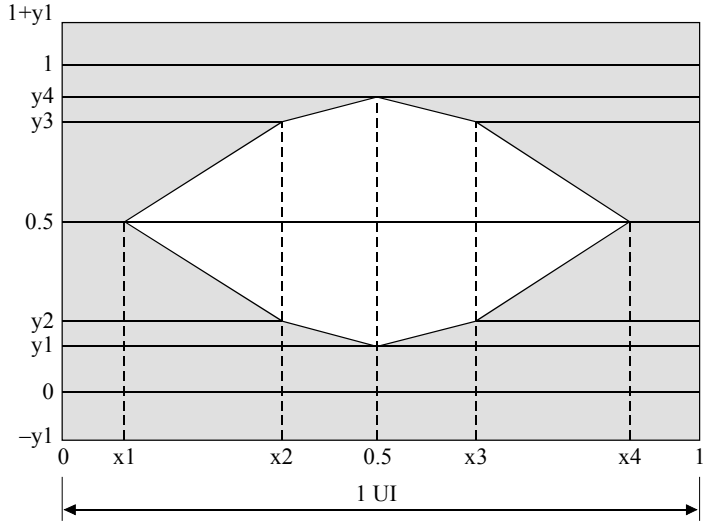

	155.52 Mbit/s	622.08 Mbit/s	1244.16 Mbit/s	2488.32 Mbit/s
x1/x4	0.10/0.90	0.20/0.80	0.22/0.78	For further study
x2/x3	0.35/0.65	0.40/0.60	0.40/0.60	For further study
y1/y4	0.13/0.87	0.15/0.85	0.17/0.83	For further study
y2/y3	0.20/0.80	0.20/0.80	0.20/0.80	For further study

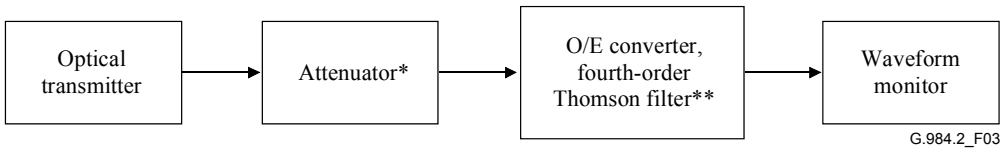

* Attenuator is used if necessary.
** Cut-off frequency (3 dB attenuation frequency) of the filter is 0.75 times output nominal bit rate.

Figure 3/G.984.2 – Mask of the eye diagram for the upstream transmission signal

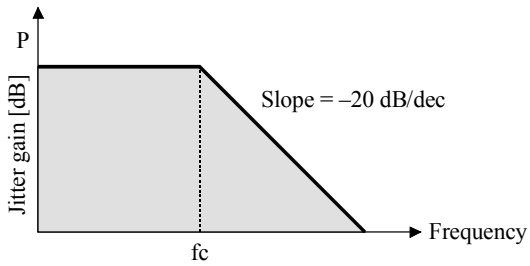

Downstream bit rate (Mbit/s)	fc [kHz]	P [dB]
1244.16	1000	0.1
2488.32	2000	0.1

G.984.2_F04

Figure 4/G.984.2 – Jitter transfer for ONU

Nokia of America Corporation
IPR2023-00960, Ex. 1022
AT&T Ex. 1022
Ex. 1022.028

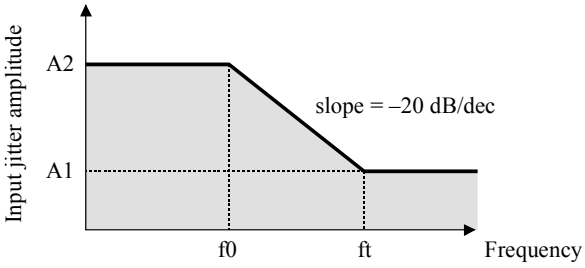

Downstream bit rate (Mbit/s)	ft [kHz]	f0 [kHz]	A1 [UIp-p]	A2 [UIp-p]
1244.16	500	50	0.075	0.75
2488.32	1000	100	0.075	0.75

G.984.2_F05

Figure 5/G.984.2 – Jitter tolerance mask for ONU

8.3 Interaction between GPON PMD layer and TC layer

As previously stated, this Recommendation describes characteristics of the PMD layer of an Optical Access Network (OAN) with the capability of transporting various services between the user-network interface and the Service node interface. However, some GPON functionalities belong to, or have impact on, both the PMD Layer and TC Layer. The following subclauses describe those functionalities and explain the relation between the GPON PMD Layer and TC Layer. The latter is specified in a separate ITU-T Recommendation.

8.3.1 Forward error correction

Systems employing forward error correction (FEC) will be able to support the ODN attenuation ranges of Table 2a with lower performance transmitters and receivers than indicated in Tables 2b through 2g-2.

The effective optical gain G of systems employing FEC is defined as the difference of optical power at the receiver input, with and without FEC, for a BER = 1×10^{-10}.

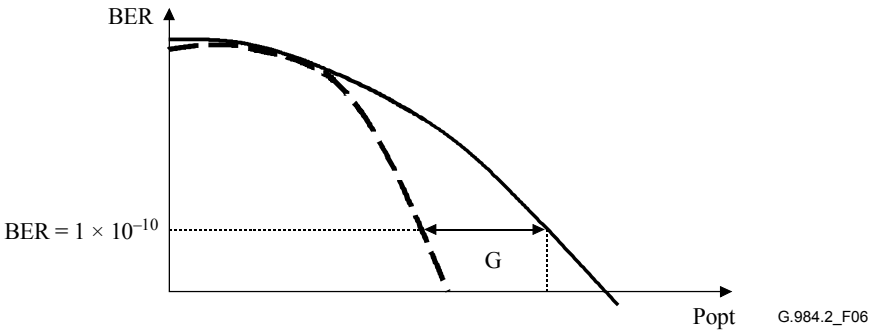

Figure 6/G.984.2 – Effective optical gain G achieved with FEC

In systems employing FEC with an effective optical gain G, expressed in dB, either of the two following performance variations from Tables 2 are acceptable (but not both, to facilitate interoperability):

i) Minimum and maximum transmitter power may be reduced by G; or

ii) Minimum receiver sensitivity may be decreased by G.

Nokia of America Corporation
IPR2023-00960, Ex. 1022
AT&T Ex. 1022
Ex. 1022.029

Alternatively, while maintaining the same performance of transmitters and receivers indicated in Tables 2b through 2g-2, the effective optical coding gain G can be used to achieve a longer physical reach or a higher split ratio when using a MLM laser in the ONU. In this case, FEC is used to reduce the penalty due to mode partition noise (MPN).

FEC is implemented at the TC layer, therefore, it is not described in this Recommendation.

The receiver overload specification is not altered by FEC gain.

8.3.2 Power levelling mechanism at ONU transmitter

The OLT receiver requirements dictate the use of APD-based implementations at 1244.16 Mbit/s and above. Such receivers must provide both a high sensitivity and a large dynamic range for a burst-mode reception at high bit rates. This imposes a compromise for the multiplication factor M of the APD-based receiver which is not straightforward, particularly for GPON supporting the Enhancement Band where the requirements rise further due to the losses and loss variations of the extra WDM components.

In order to relax the dynamic range of the OLT receiver, the transmitter power level of the ONUs experiencing a low ODN loss should be reduced in order to avoid overload of the OLT receiver. For this reason, a suitable power levelling mechanism has to be implemented.

The power levelling mechanism requires functionalities belonging to the TC Layer, such as the ONU capability to increase/reduce the transmitted power on the basis of downstream messages sent by the OLT. Such functionalities, as well as the capability to perform power levelling during initialization or also during operation, are not described in this Recommendation.

The requirements at the PMD layer to allow a suitable power levelling mechanism for GPON systems are reported below. The background for the requirements is described in Appendix II.

a) The ONU output power can have three modes. The PMD can be locally directed to operate in any mode. Upon such a control input, the PMD will perform whatever actions it needs to take in order to achieve an output power that lies within the range specified below:

   Mode 0: Normal (mean launched MIN/MAX as stated in Tables 2f-2 and 2g-2)

   Mode 1: Low 1 = Normal –3 dB

   Mode 2: Low 2 = Normal – 6dB

b) The OLT measures the average optical power, P, of each ONU burst. The OLT compares this measurement to one or two thresholds (TL and TH), and issue one of three indications as shown:

   P > TH: power_high indication

   P < TL: power_low indication

   TL < P < TH: power_ok indication

   NOTE – TL is required (single threshold operation), TH is an optional requirement (double threshold operation).

   The uncertainty range on the threshold comparison must be maximum 4 dB.

c) Taking into account the values of the optical power corresponding to the OLT Rx minimum sensitivity P_{ms} and minimum overload P_{mo} stated in Tables 2f-2 and 2g-2, the values of TH and TL must satisfy the following conditions:

   Double threshold operation:

   R1: $P_{mo} > TH > (P_{mo} – 4\ dB)$

   R2: $(P_{ms} + 5\ dB) > TL > (P_{ms} + 1\ dB)$

   R3: $TH – TL > 8\ dB$.

Nokia of America Corporation
IPR2023-00960, Ex. 1022
AT&T Ex. 1022
Ex. 1022.030

Single threshold operation:

R2: (P_{ms} + 7 dB) > TL > (P_{ms} + 1 dB).

d) The OLT Rx must be able to measure the burst power (but not reliably read the data) at sensitivity – 5 dB (see Tables 2f-2 and 2g-2).

The benefits of the power levelling mechanism are:

- Reduced dynamic range requirement at the OLT receiver, as an ONU at low ODN loss will be set at a low transmitter power.
- Increase of laser lifetime and reduction of power consumption when an ONU is working in low-power mode.

The power levelling mechanism allows the relaxation of the requirements for the OLT receiver, as indicated in Tables 2f-2 and 2g-2.

8.3.3 Upstream physical layer overhead

The GPON frame structure is described in a different ITU-T Recommendation devoted to the specification of the TC Layer. However, the upstream bursts must be preceded by a suitable Physical Layer Overhead, which is used to accommodate several physical processes in the GPON. Table 3 shows the length of the Physical Layer Overhead for all the upstream bit rates specified in this Recommendation.

Table 3/G.984.2 – GPON upstream physical layer overhead

Upstream bit rate	Overhead bytes
155.52 Mbit/s	4
622.08 Mbit/s	8
1244.16 Mbit/s	12
2488.32 Mbit/s	24

Moreover, Appendix I provides information on the physical processes that have to be performed during the Physical Layer Overhead (Tplo) time, and some guidelines for an optimized usage of such time.

Appendix I

Allocation of the physical layer overhead time

The Physical Layer Overhead (Tplo) time is used to accommodate five physical processes in the PON. These are: Laser on/off time, Timing drift tolerance, level recovery, clock recovery, and start of burst delimitation. The exact division of the physical layer time to all these functions is determined partly by constraint equations, and partly by implementation choices. This appendix reviews the constraints that the OLT must comply with, and suggests values for the discretionary values.

As shown in Table I.2, specific values for Ton, Toff, and Tplo are given for the different data rates. Tplo can be divided into three sections with respect to what ONT data pattern is desired. For simplicity, these times can be referred to as the guard time (Tg), the preamble time (Tp) and the delimiter time (Td). During Tg, the ONT will transmit no more power that the nominal zero level. During Tp, the ONT will transmit a preamble pattern that provides maximal transition density for fast level and clock recovery functions. Lastly, during Td, the ONT will transmit a special data

Nokia of America Corporation
IPR2023-00960, Ex. 1022
AT&T Ex. 1022
Ex. 1022.031

pattern with optimal autocorrelation properties that enable the OLT to find the beginning of the burst.

An additional parameter of the control logic on the PON is the total peak-to-peak timing uncertainty (Tu). This uncertainty arises from variations of the time of flight caused by fibre and component variations with temperature and other environmental factors.

The constraint equations with which the OLT must comply is then:

$$\mathrm{Tg} > \mathrm{Ton} + \mathrm{Tu}, \text{and}$$
$$\mathrm{Tg} > \mathrm{Toff} + \mathrm{Tu}$$

Td must provide sufficient data bits to provide a robust delimiter function in the face of bit errors. The error resistance of the delimiter depends on the exact implementation of the pattern correlator, but a simple approximate relationship between the number of bits in the delimiter (N) and the number of bit errors tolerated (E) is:

$$E = \mathrm{int}(N/4) - 1 \qquad \text{(I-1)}$$

Equation I-1 has been empirically verified by a numerical search of all the delimiters of sizes ranging from 8 to 20 bits. This search was performed under the assumption that the preamble pattern was a '1010' repeating pattern, and that the delimiter has an equal number of zeroes and ones. The Hamming distance, D, of the best delimiter from all shifted patterns of itself and the preamble was found to be D = int(N/2) – 1; yielding the error tolerance shown.

Given a certain bit error rate (BER), the probability of a severely errored burst (Pseb) is given by:

$$Pseb = \left(\frac{N}{E+1}\right) BER^{E+1} \qquad \text{(I-2)}$$

Substituting Equation I-1 into Equation I-2, the resultant Pseb is given by:

$$Pseb = \left(\frac{N}{\mathrm{int}(N/4)}\right) BER^{\mathrm{int}(N/4)} \qquad \text{(I-3)}$$

If the BER equals 1E–4, the resultant Pseb for various delimiter lengths, N, are given in Table I.1. Inspection of this table shows that, in order to suppress this kind of error, the delimiter length must be at least 16 bits, if not more.

Table I.1/G.984.2 – Probability of a severely errored burst as a function of delimiter length

N	Pseb
8	2.8E–07
12	2.2E–10
16	1.8E–13
20	1.5E–16
24	1.3E–19

With these considerations taken into account, the recommended allocations of the physical layer overhead are given in Table I.2. This table also lists the normative values for the ONT Tx Enable time and Tx Disable time, and the total Physical Layer Overhead time for reference.

Nokia of America Corporation
IPR2023-00960, Ex. 1022
AT&T Ex. 1022
Ex. 1022.032

Table I.2/G.984.2 – Recommended allocation of burst mode overhead time for OLT functions

Upstream data rate (Mbit/s)	Tx enable (bits)	Tx disable (bits)	Total time (bits)	Guard time (bits)	Preamble time (bits)	Delimiter time (bits)
155.52	2	2	32	6	10	16
622.08	8	8	64	16	28	20
1244.16	16	16	96	32	44	20
2488.32	32	32	192	64	108	20
Notes	Maximum	Maximum	Mandatory	Minimum	Suggested	Suggested

Appendix II

Description and examples of power levelling mechanism

II.1 Introduction

This appendix illustrates the different considerations that have to be taken into account in order to perform a stable and efficient power levelling mechanism. They lead to the requirements of 8.3.2.

II.2 ONU levels

The ONU transmitter power (mean launched MIN and MAX) is described in Tables 2f-2 and 2g-2. These values correspond to Mode 0. The values corresponding to Mode 1 and Mode 2 are respectively 3 dB and 6 dB lower. As an example, a Class B ONU for 1244 Mbit/s with power levelling capability will comply to the following output power ranges:

Mode 0: MIN = –2 dBm ≤ mean launched power ≤ MAX = +3 dBm

Mode 1: MIN = –5 dBm ≤ mean launched power ≤ MAX = 0 dBm

Mode 2: MIN = –8 dBm ≤ mean launched power ≤ MAX = –3 dBm

The power levelling mechanism is under control of the OLT and determines the necessary level changes. When an ONU receives an order to change from one mode to another, it will be able to set its emitted power to the corresponding range of the new mode and will then resume sending upstream data. Note that as long as the ranges are respected, the effective change of ONU power from one mode to another doesn't necessarily have to be equal to the 3 dB or 6 dB step.

Example 1

- An ONU in mode 1 is emitting at –1 dBm.
- This ONU receives a message to go to mode 0 (increase setting by +3 dB).
- The effective emitted power is now +1 dBm, not exactly 3 dB higher but within the range of Mode 0.

Example 2

- An ONU in mode 2 is emitting at –4 dBm.
- The ONU receives a message to go to mode 1 (increase setting by +3 dB).
- The effective emitted power is now –5 dBm, lower than the previous power but within the range of Mode 1.

Nokia of America Corporation
IPR2023-00960, Ex. 1022
AT&T Ex. 1022
Ex. 1022.033

- The OLT will measure a lower power while it expected a higher power. The algorithm in the OLT will therefore send another command to increase by 3 dB (go to Mode 0).
- The ONU will now emit within the range of Mode 0, which is min. –2 dBm.

II.3 Thresholds at OLT

The OLT receiver measures the incoming power level for a particular ONU and compares it to thresholds. There will be an uncertainty on this measurement, due to implementation-specific inaccuracies (current sources, linearity of receiver at high power, supply voltage variations, temperature effects on the electrical amplifier stages etc.). This translates into uncertainties on the effective threshold value when compared to its setting. These uncertainties have to be taken into account for guaranteeing a comprehensive and stable power levelling mechanism. The uncertainty range over which the threshold can vary over the full operational range of the OLT is required to be max. 4 dB.

Taking into account the values of the optical power corresponding to the OLT Rx minimum sensitivity P_{ms} and minimum overload P_{mo} stated in Tables 2f-2 and 2g-2, the allowed power range at the OLT receiver for correct operation is then (P_{ms} + 1 dB) through P_{mo}. Note that P_{ms} includes a 1 dB penalty (see 8.2.8.3) which does not have to be considered for the minimal optical power. A correct power at the OLT receiver must be guaranteed by the power levelling mechanism. There are two cases for the mechanism: single threshold and double threshold.

II.3.1 Case 1: Comparison to two thresholds (TL, TH)

In this case, the power levelling mechanism is implemented by comparing the received average power at the OLT (P) to two different thresholds (TL and TH). When P < TL, the power at the OLT is considered too low and the ONU must go to a higher mode. When P > TH, the power at the OLT is considered too high and the ONU must go to a lower mode. When TH > P > TL, the power at the OLT is considered fine and the ONU can be kept at its current mode.

1) The effective value of TH must guarantee that:
   - Any power level above OLT receiver overload is detected: $P_{mo} > TH$.
   - If an ONU goes in a lower mode because P > TH, the OLT receiver may not come below sensitivity:

     $TH > P_{mo} – ((P_{mo} – P_{ms} –1\ dB) – 3\ dB – (P_{ONU\ Tx\ MAX} – P_{ONU\ Tx\ MIN}))$.

     This is equal to: $TH > P_{mo} – 6\ dB$.
2) The effective value of TL must guarantee that:
   - Any power level below OLT receiver sensitivity is detected: $TL > P_{ms} + 1\ dB$.
   - If an ONU goes in a higher mode because P < TL, the OLT receiver may not come into overload:

     $(P_{ms} + 1\ dB) + ((P_{mo} – P_{ms} –1\ dB) – 3\ dB – (P_{ONU\ Tx\ MAX} – P_{ONU\ Tx\ MIN})) > TL$.

     This is equal to: $P_{ms} + 7\ dB > TL$.
3) The combined effective values of TL and TH must guarantee that:
   - the mechanism is stable (no repetitive toggling between modes). If an ONU changes to another mode because P < TL or P > TH, the new power level at the OLT receiver may not cross the opposite threshold. This is equivalent to defining a minimum spacing between TH and TL.

     $TH – TL > 3\ dB + (P_{ONU\ Tx\ MAX} – P_{ONU\ Tx\ MIN})$.

     This is equal to: $TH – TL > 8\ dB$.

Nokia of America Corporation
IPR2023-00960, Ex. 1022
AT&T Ex. 1022
Ex. 1022.034

This last combined requirement tightens the individual requirements for TH and TL, as they should be spaced by at least 8 dB. Taking into account the requirement of the uncertainty margin of max. 4 dB, the best fit for the first and second requirements (largest spacing between TH and TL) then becomes:

R1: $P_{mo} > TH > P_{mo} – 4$ dB.

R2: $P_{ms} + 5$ dB $> TL > P_{ms} + 1$ dB.

As R1 and R2 only guarantee a spacing of 6 dB, the third requirement must also be kept :

R3: TH – TL > 8 dB.

R1, R2 and R3 together allow for a variation of TH and TL over 4 dB over the full operational range of the OLT (temperature, ...) but require that at any moment TH and TL are spaced by at least 8 dB.

If an OLT has a more precise power measurement than 4 dB, any combination of TH and TL can be chosen as long as R1, R2 and R3 are respected.

II.3.2 Case 2: Comparison to one threshold (TL)

The power levelling mechanism is implemented by starting all ONUs at Mode 2 (during their initialization) and comparing the received average power at the OLT (P) to one threshold (TL). When P < TL, the power at the OLT is considered too low and the ONU must go to a higher mode. When P > TL the power at the OLT is considered fine and the ONU can be kept in its current mode.

The effective value of TL must guarantee that:

- Any power level under OLT receiver sensitivity is detected: $TL > P_{ms} + 1$ dB.
- If an ONU goes in a higher mode because P < TL, the OLT receiver may not come into overload:

  $(P_{ms} + 1 \text{ dB}) + ((P_{mo} – P_{ms} –1 \text{ dB}) – 3 \text{ dB} – (P_{ONU\ Tx\ MAX} – P_{ONU\ Tx\ MIN})) > TL$.

  This is equal to: $P_{ms} + 7$ dB > TL.

Therefore the requirement for the effective level TL is:

R2: $P_{ms} + 7$ dB $> TL > P_{ms} + 1$ dB.

With an uncertainty range of 4 dB, this leaves a choice for the TL setting:

Example 1 for Class B at 1244 Mbit/s: –23 dBm > TL > –27 dBm;

Example 2 for Class B at 1244 Mbit/s: –21 dBm > TL > –25 dBm.

II.4 Power detection

In order to initialize new ONUs, the OLT periodically opens ranging windows during which new ONUs can send upstream bursts. The OLT must be able to detect the presence of any new ONU. This implies that when new ONUs start at Mode 2, the OLT must be capable to detect (but not necessarily read data at) an optical power as weak as $(P_{ms} + 1 \text{ dB}) – 6 \text{ dB} = P_{ms} – 5$ dB.

Nokia of America Corporation
IPR2023-00960, Ex. 1022
AT&T Ex. 1022
Ex. 1022.035

SERIES OF ITU-T RECOMMENDATIONS

Series A	Organization of the work of ITU-T
Series B	Means of expression: definitions, symbols, classification
Series C	General telecommunication statistics
Series D	General tariff principles
Series E	Overall network operation, telephone service, service operation and human factors
Series F	Non-telephone telecommunication services
Series G	**Transmission systems and media, digital systems and networks**
Series H	Audiovisual and multimedia systems
Series I	Integrated services digital network
Series J	Cable networks and transmission of television, sound programme and other multimedia signals
Series K	Protection against interference
Series L	Construction, installation and protection of cables and other elements of outside plant
Series M	TMN and network maintenance: international transmission systems, telephone circuits, telegraphy, facsimile and leased circuits
Series N	Maintenance: international sound programme and television transmission circuits
Series O	Specifications of measuring equipment
Series P	Telephone transmission quality, telephone installations, local line networks
Series Q	Switching and signalling
Series R	Telegraph transmission
Series S	Telegraph services terminal equipment
Series T	Terminals for telematic services
Series U	Telegraph switching
Series V	Data communication over the telephone network
Series X	Data networks and open system communications
Series Y	Global information infrastructure and Internet protocol aspects
Series Z	Languages and general software aspects for telecommunication systems

Printed in Switzerland
Geneva, 2003

Nokia of America Corporation
IPR2023-00960, Ex. 1022
Ex. 1022.038

AT&T Ex. 1022