INTERNATIONAL TELECOMMUNICATION UNION

ITU-T

TELECOMMUNICATION
STANDARDIZATION SECTOR
OF ITU

G.984.1

(03/2003)

SERIES G: TRANSMISSION SYSTEMS AND MEDIA, DIGITAL SYSTEMS AND NETWORKS

Digital sections and digital line system – Optical line systems for local and access networks

Gigabit-capable Passive Optical Networks (GPON): General characteristics

ITU-T Recommendation G.984.1

Nokia of America Corporation
IPR2023-00960, Ex. 1023
AT&T Ex. 1023
Ex. 1023.001

ITU-T G-SERIES RECOMMENDATIONS

TRANSMISSION SYSTEMS AND MEDIA, DIGITAL SYSTEMS AND NETWORKS

INTERNATIONAL TELEPHONE CONNECTIONS AND CIRCUITS	G.100–G.199
GENERAL CHARACTERISTICS COMMON TO ALL ANALOGUE CARRIER-TRANSMISSION SYSTEMS	G.200–G.299
INDIVIDUAL CHARACTERISTICS OF INTERNATIONAL CARRIER TELEPHONE SYSTEMS ON METALLIC LINES	G.300–G.399
GENERAL CHARACTERISTICS OF INTERNATIONAL CARRIER TELEPHONE SYSTEMS ON RADIO-RELAY OR SATELLITE LINKS AND INTERCONNECTION WITH METALLIC LINES	G.400–G.449
COORDINATION OF RADIOTELEPHONY AND LINE TELEPHONY	G.450–G.499
TESTING EQUIPMENTS	G.500–G.599
TRANSMISSION MEDIA CHARACTERISTICS	G.600–G.699
DIGITAL TERMINAL EQUIPMENTS	G.700–G.799
DIGITAL NETWORKS	G.800–G.899
DIGITAL SECTIONS AND DIGITAL LINE SYSTEM	G.900–G.999
General	G.900–G.909
Parameters for optical fibre cable systems	G.910–G.919
Digital sections at hierarchical bit rates based on a bit rate of 2048 kbit/s	G.920–G.929
Digital line transmission systems on cable at non-hierarchical bit rates	G.930–G.939
Digital line systems provided by FDM transmission bearers	G.940–G.949
Digital line systems	G.950–G.959
Digital section and digital transmission systems for customer access to ISDN	G.960–G.969
Optical fibre submarine cable systems	G.970–G.979
Optical line systems for local and access networks	**G.980–G.989**
Access networks	G.990–G.999
QUALITY OF SERVICE AND PERFORMANCE	G.1000–G.1999
TRANSMISSION MEDIA CHARACTERISTICS	G.6000–G.6999
DIGITAL TERMINAL EQUIPMENTS	G.7000–G.7999
DIGITAL NETWORKS	G.8000–G.8999

For further details, please refer to the list of ITU-T Recommendations.

Nokia of America Corporation
IPR2023-00960, Ex. 1023
AT&T Ex. 1023
Ex. 1023.002

ITU-T Recommendation G.984.1

Gigabit-capable Passive Optical Networks (GPON): General characteristics

Summary

This Recommendation describes a flexible optical fibre access network capable of supporting the bandwidth requirements of business and residential services and covers systems with nominal line rates of 1.2 Gbit/s and 2.4 Gbit/s in the downstream direction and 155 Mbit/s, 622 Mbit/s, 1.2 Gbit/s and 2.4 Gbit/s in the upstream direction. Both symmetrical and asymmetrical (upstream/downstream) Gigabit-capable Passive Optical Network (GPON) systems are described. This Recommendation proposes the general characteristics for GPON based on operators' service requirements.

This Recommendation aims to improve on the G.983.1 system by reconsidering a supporting service, security policy, nominal bit-rate, and so on. In order to insure maximal continuity with existing systems and optical fibre infrastructure, this Recommendation maintains some requirements of ITU-T Rec. G.983.1.

Source

ITU-T Recommendation G.984.1 (2003) was prepared by ITU-T Study Group 15 (2001-2004) and approved under the WTSA Resolution 1 procedure on 16 March 2003.

Nokia of America Corporation
IPR2023-00960, Ex. 1023
AT&T Ex. 1023
Ex. 1023.003

FOREWORD

The International Telecommunication Union (ITU) is the United Nations specialized agency in the field of telecommunications. The ITU Telecommunication Standardization Sector (ITU-T) is a permanent organ of ITU. ITU-T is responsible for studying technical, operating and tariff questions and issuing Recommendations on them with a view to standardizing telecommunications on a worldwide basis.

The World Telecommunication Standardization Assembly (WTSA), which meets every four years, establishes the topics for study by the ITU-T study groups which, in turn, produce Recommendations on these topics.

The approval of ITU-T Recommendations is covered by the procedure laid down in WTSA Resolution 1.

In some areas of information technology which fall within ITU-T's purview, the necessary standards are prepared on a collaborative basis with ISO and IEC.

NOTE

In this Recommendation, the expression "Administration" is used for conciseness to indicate both a telecommunication administration and a recognized operating agency.

INTELLECTUAL PROPERTY RIGHTS

ITU draws attention to the possibility that the practice or implementation of this Recommendation may involve the use of a claimed Intellectual Property Right. ITU takes no position concerning the evidence, validity or applicability of claimed Intellectual Property Rights, whether asserted by ITU members or others outside of the Recommendation development process.

As of the date of approval of this Recommendation, ITU had not received notice of intellectual property, protected by patents, which may be required to implement this Recommendation. However, implementors are cautioned that this may not represent the latest information and are therefore strongly urged to consult the TSB patent database.

© ITU 2003

All rights reserved. No part of this publication may be reproduced, by any means whatsoever, without the prior written permission of ITU.

Nokia of America Corporation
IPR2023-00960, Ex. 1023
AT&T Ex. 1023
Ex. 1023.004

CONTENTS

		Page
1	Scope	1
2	References	1
3	Definitions	2
4	Abbreviations	2
5	Architecture of the optical access network	3
	5.1 Network architecture	3
	5.2 Reference configuration	5
6	Services, user network interface and service node interface	6
	6.1 Services	6
	6.2 User Network Interface (UNI) and Service Node Interface (SNI)	6
7	Bit rate	6
8	Logical reach	6
9	Physical reach	6
10	Differential fibre distance	7
11	Maximum mean signal transfer delay	7
12	Split ratio	7
13	Service overlay	7
14	Protection on the PON section	7
	14.1 Possible switching types	7
	14.2 Possible duplex GPON configurations and characteristics	8
	14.3 Requirements	10
	14.4 Required information fields for OAM frame	11
15	Security	11
Appendix I – Examples of services, UNI and SNI		11
	I.1 Examples of services	11
	I.2 Examples of UNI	12
	I.3 Examples of SNI	13
Appendix II – Bibliography		13

Nokia of America Corporation
IPR2023-00960, Ex. 1023
AT&T Ex. 1023
Ex. 1023.005

ITU-T Recommendation G.984.1

Gigabit-capable Passive Optical Networks (GPON): General characteristics

1 Scope

This Recommendation addresses the general characteristics of Gigabit-capable Passive Optical Network (GPON) systems, in order to guide and motivate the physical layer and the transmission convergence layer specifications. The general characteristics include examples of services, User Network Interfaces (UNI) and Service Node Interfaces (SNI) that are requested by network operators. Also, this Recommendation shows the principal deployment configuration.

As much as possible, this Recommendation maintains characteristics from ITU-T Rec. G.982 and G.983.x series of Recommendations. This is to promote backward compatibility with existing Optical Distribution Networks (ODN) that complies with those Recommendations.

GPON systems are characterized, in general, by an Optical Line Termination (OLT) system and an Optical Network Unit (ONU) or Optical Network Termination (ONT) with a passive Optical Distribution Network (ODN) interconnecting them. There is, in general, a one-to-many relationship between the OLT and the ONU/ONTs respectively.

2 References

The following ITU-T Recommendations and other references contain provisions, which, through reference in this text, constitute provisions of this Recommendation. At the time of publication, the editions indicated were valid. All Recommendations and other references are subject to revision; users of this Recommendation are therefore encouraged to investigate the possibility of applying the most recent edition of the Recommendations and other references listed below. A list of the currently valid ITU-T Recommendations is regularly published. The reference to a document within this Recommendation does not give it, as a stand-alone document, the status of a Recommendation

[1] ITU-T Recommendation G.652 (2003), *Characteristics of a single-mode optical fibre cable*.

[2] ITU-T Recommendation G.902 (1995), *Framework Recommendation on functional access networks (AN) – Architecture and functions, access types, management and service node aspects*.

[3] ITU-T Recommendation G.982 (1996), *Optical access networks to support services up to the ISDN primary rate or equivalent bit rates*.

[4] ITU-T Recommendation G.983.1 (1998), *Broadband optical access systems based on Passive Optical Networks (PON)*.

[5] ITU-T Recommendation G.983.2 (2002), *ONT management and control interface specification for B-PON*.

[6] ITU-T Recommendation G.983.3 (2001), *A broadband optical access system with increased service capability by wavelength allocation*.

[7] ITU-T Recommendation I.112 (1993), *Vocabulary of terms for ISDNs*.

Nokia of America Corporation
IPR2023-00960, Ex. 1023
AT&T Ex. 1023
Ex. 1023.007

3 Definitions

This Recommendation makes frequent use of the terms defined in ITU-T Recs G.983.1 [4] and G.983.3 [6]; some terms have been added. For convenience, the main definitions related to the GPON service requirements are reported in this clause.

3.1 Adaptation Function (AF): AF is additional equipment to change an ONT/ONU subscriber interface into the UNI interface that is required by an operator or to change a UNI interface into an ONT/ONU subscriber interface. Functions of AF depend on the ONT/ONU subscriber interface and UNI interface. AF is also used to change an OLT network interface into the SNI interface that is required by an operator or to change a SNI interface into an OLT network interface.

3.2 logical reach: Logical reach is defined as the maximum distance that can be achieved for a particular transmission system, regardless of the optical budget.

3.3 differential fibre distance: An OLT is connected to several ONU/ONTs. The differential fibre distance is the difference in the distance between the nearest and furthest ONU/ONT from the OLT.

3.4 mean signal transfer delay: The mean signal transfer delay is the average of the upstream and downstream delay values between reference points; this value is determined by measuring round-trip delay and then dividing by 2.

3.5 Optical Access Network (OAN): The OAN is the set of access links sharing the same network-side interfaces and supported by optical access transmission systems. The OAN may include a number of ODNs connected to the same OLT.

3.6 Optical Distribution Network (ODN): An ODN realizes the optical transmission from the OLT towards the users and vice versa. It utilizes passive optical components.

3.7 Optical Line Termination (OLT): An OLT provides the network-side interface of the OAN and is connected to one or more ODNs.

3.8 Optical Network Termination (ONT): An ONT is an ONU used for FTTH that includes the User Port function.

3.9 Optical Network Unit (ONU): An ONU provides (directly or remotely) the user-side interface of the OAN and is connected to the ODN.

3.10 physical reach: Physical reach is defined as the maximum physical distance that can be achieved for a particular transmission system.

3.11 service: Service is defined as a network service required by operators. Service is described by the name that is clearly recognized by everyone, regardless of whether it is a frame structure name or a general name.

3.12 Service Node Interface (SNI): See ITU-T Rec. G.902.

3.13 User Network Interface (UNI): See ITU-T Rec. I.112.

4 Abbreviations

This Recommendation uses the following abbreviations:

AF	Adaptation Function
BRI	Basic Rate Interface
DSL	Digital Subscriber Line
FTTB	Fibre to the Building

Nokia of America Corporation
IPR2023-00960, Ex. 1023
AT&T Ex. 1023
Ex. 1023.008

FTTCab/C	Fibre to the Cabinet/Curb
FTTH	Fibre to the Home
ISDN	Integrated Services Digital Network
LT	Line Terminal
MDU	Multi-dwelling Unit
NT	Network Termination
OAM	Operation, Administration and Maintenance
OAN	Optical Access Network
ODN	Optical Distribution Network
OLT	Optical Line Termination
ONT	Optical Network Termination
ONU	Optical Network Unit
OpS	Operations System
PDH	Plesiochronous Digital Hierarchy
PON	Passive Optical Network
POTS	Plain Old Telephone Service
PRI	Primary Rate Interface
PSTN	Public Switched Telephone Network
SDH	Synchronous Digital Hierarchy
SN	Serial Number
SNI	Service Node Interface
TC	Transmission Convergence
UNI	User Network Interface
VOD	Video-On-Demand
WDM	Wavelength Division Multiplexing

5 Architecture of the optical access network

5.1 Network architecture

The optical section of a local access network system can be either active or passive and its architecture can be either point-to-point or point-to-multipoint. Figure 1 shows the architectures considered, which range from Fibre to the Home (FTTH), through Fibre to the Building/Curb (FTTB/C) to Fibre to the Cabinet (FTTCab). The Optical Access Network (OAN) is common to all architectures shown in Figure 1, hence the commonality of this system has the potential to generate large worldwide volumes.

Nokia of America Corporation
IPR2023-00960, Ex. 1023
AT&T Ex. 1023
Ex. 1023.009

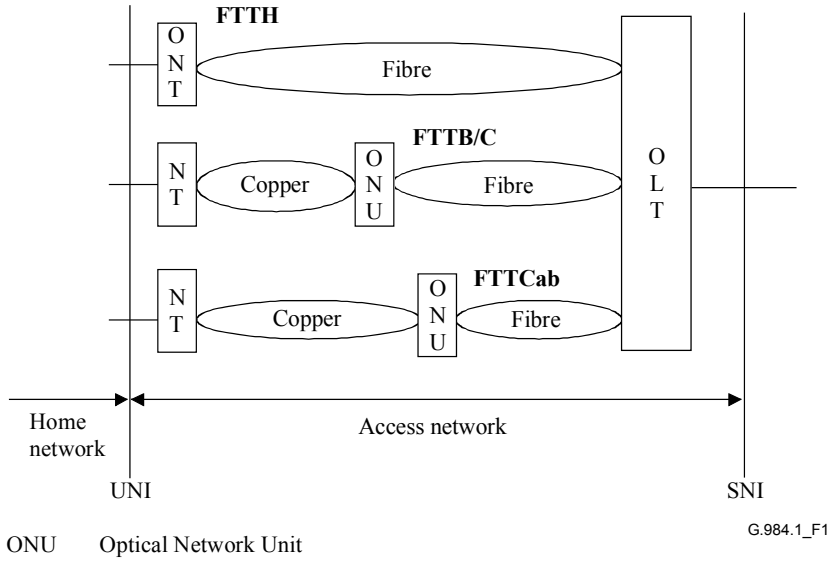

ONU Optical Network Unit
ONT Optical Network Termination
OLT Optical Line Termination
NT Network Termination

Figure 1/G.984.1 – Network architecture

The differences of the FTTB, FTTC, FTTCab and FTTH network options are mainly due the different services supported, so they can be treated the same in this Recommendation.

5.1.1 FTTB scenario

The FTTB scenario is divided into two scenarios, one for multi-dwelling units (MDU) and the other for businesses. Each scenario has the following service categories:

5.1.1.1 FTTB for MDU

– Asymmetric broadband services (e.g., digital broadcast services, VOD, file download, etc.).

– Symmetric broadband services (e.g., content broadcast, e-mail, file exchange, distance learning, telemedicine, online-game, etc.).

– POTS and ISDN. The access network must be able to provide, in a flexible way, narrow-band telephone services with appropriate timing for the introduction.

5.1.1.2 FTTB for business

– Symmetric broadband services (e.g., group software, content broadcast, e-mail, file exchange, etc.).

– POTS and ISDN. The access network must be able to provide, in a flexible way, narrow-band telephone services with the appropriate timing for the introduction.

– Private line. The access network must be able to provide, in a flexible way, private line services at several rates.

5.1.2 FTTC and FTTCab scenario

Within this scenario, the following service categories have been considered:

– Asymmetric broadband services (e.g., digital broadcast services, VoD, file download, online-game, etc.).

– Symmetric broadband services (e.g., content broadcast, e-mail, file exchange, distance learning, telemedicine, etc.).

Nokia of America Corporation
IPR2023-00960, Ex. 1023
AT&T Ex. 1023
Ex. 1023.010

– POTS and ISDN. The access network must be able to provide, in a flexible way, narrow-band telephone services with the appropriate timing for the introduction.

– xDSL backhaul.

5.1.3 FTTH scenario

Within this scenario, the following service categories have been considered:

– Asymmetric broadband services (e.g., digital broadcast services, VOD, file download, etc.).

– Symmetric broadband services (e.g., content broadcast, e-mail, file exchange, distance learning, telemedicine, online-game, etc.).

– POTS and ISDN. The access network must be able to provide, in a flexible way, narrow-band telephone services with the appropriate timing for the introduction.

5.2 Reference configuration

The reference configuration is shown in Figure 2.

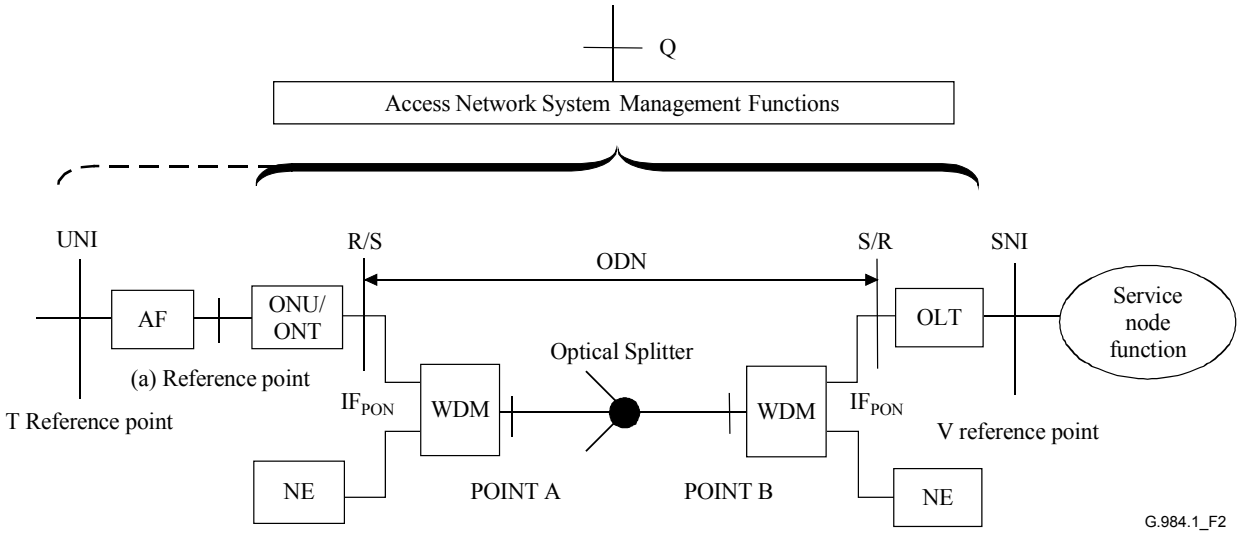

ONU	Optical Network Unit
ONT	Optical Network Terminal
ODN	Optical Distribution Network
OLT	Optical Line Termination
WDM	Wavelength Division Multiplex Module (If WDM is not used, this function is not necessary.)
NE	Network Element which uses the different wavelength from the OLT and the ONU
AF	Adaptation Function (Sometimes, it may be included in the ONU.)
SNI	Service Node Interface
UNI	User Network Interface
S	Point on the optical fibre just after the OLT (Downstream)/ONU (Upstream) optical connection point (i.e., optical connector or optical splice)
R	Point on the optical fibre just before the ONU (Downstream)/OLT (Upstream) optical connection point (i.e., optical connector or optical splice)
(a) Reference point	If AF is included in the ONU, this point is not necessary.
POINT A/B	If WDM is not used, these points are not necessary.

NOTE – Whether or not the AF is an operating object of the Q interface depends on the service.

Figure 2/G.984.1 – Reference configuration for GPON

Nokia of America Corporation
IPR2023-00960, Ex. 1023
AT&T Ex. 1023
Ex. 1023.011

5.2.1 Service node interface

See ITU-T Rec. G.902 [2].

5.2.2 Interface at the reference points S/R and R/S

The interface at reference points S/R and R/S is defined as $IF_{PON.}$ This is a PON-specific interface that supports all the protocol elements necessary to allow transmission between OLT and ONUs.

6 Services, user network interface and service node interface

6.1 Services

GPON is required to support all currently known services and new services being discussed for the residential subscribers and business customers, because of such a broadband capability.

What specific services should be provided is clearer to some operators than to others and depends heavily on the particular regulatory conditions of each operators' markets, as well as on the own markets potential. How these services are delivered in a cost effective way is a function not only of legal conditions, but also of factors including existing telecommunications infrastructure, dwelling distribution and residential and business customers mix.

The examples of services are described in clause I.1.

6.2 User Network Interface (UNI) and Service Node Interface (SNI)

ONU/ONT has UNI, as well as OLT, has SNI as described in Figure 2. UNI/SNI depends on which services are provided by the service operator.

The examples of UNI are described in clause I.2. Also, The examples of SNI are described in clause I.3.

7 Bit rate

Basically, GPON aims at transmission speeds greater than or equal to 1.2 Gbit/s. However, in the case of FTTH or FTTC with asymmetric xDSL, such a high-speed upstream bit rate might not be needed. Accordingly, GPON identifies 7 transmission speed combinations as follows:

- 155 Mbit/s up, 1.2 Gbit/s down;
- 622 Mbit/s up, 1.2 Gbit/s down;
- 1.2 Gbit/s up, 1.2 Gbit/s down;
- 155 Mbit/s up, 2.4 Gbit/s down;
- 622 Mbit/s up, 2.4 Gbit/s down;
- 1.2 Gbit/s up, 2.4 Gbit/s down;
- 2.4 Gbit/s up, 2.4 Gbit/s down.

8 Logical reach

Logical reach is the maximum distance between ONU/ONT and OLT except for the limitation of the physical layer. In GPON, the maximum logical reach is defined as 60 km.

9 Physical reach

Physical reach is the maximum physical distance between the ONU/ONT and the OLT. In GPON, two options are defined for the physical reach: 10 km and 20 km. It is assumed that 10 km is the

Nokia of America Corporation
IPR2023-00960, Ex. 1023
AT&T Ex. 1023
Ex. 1023.012

maximum distance over which FP-LD can be used in the ONU for high bit rates such as 1.25 Gbit/s or above.

10 Differential fibre distance

In GPON, the maximum differential fibre distance is 20 km. This affects the size of the ranging window and provides compliance with ITU-T Rec. G.983.1.

11 Maximum mean signal transfer delay

GPON must accommodate services that require a maximum mean signal transfer delay of 1.5 ms.

Specifically, GPON system must have a maximum mean signal transfer delay time of less than 1.5 ms between T-V (or (a)-V, depending on operator's preference). See clause 12/G.982 [3].

Although a section of the delay measurement is T-V for FTTH system or (a)-V for the other application in ITU-T Rec. G.982, in a GPON system the reference points are not restricted by the system configuration.

12 Split ratio

Basically, the larger the split ratio is for GPON, the more attractive it is for operators. However, a larger split ratio implies greater optical splitting which creates the need for an increased power budget to support the physical reach.

Split ratios of up to 1:64 are realistic for the physical layer given current technology. However, anticipating the continued evolution of optical modules, the TC layer must consider split ratios up to 1:128.

13 Service overlay

An overlay wavelength may be used to provide enhanced services to the subscriber. Accordingly, GPON must vacate the Enhancement Band defined in ITU-T Rec. G.983.3.

14 Protection on the PON section

From the viewpoint of administration of the access network, the protection architecture of GPON is considered to enhance the reliability of the access networks. However, protection shall be considered as an optional mechanism because its implementation depends on the realization of economical systems.

This clause presents some possible duplex configurations and related requirements as examples of protected GPON systems. In addition, the required OAM message for protection is mentioned.

14.1 Possible switching types

There are two types of protection switching both of which are analogous to those of SDH systems:

i) automatic switching; and

ii) forced switching.

The first one is triggered by fault detection, such as loss of signal, loss of frame, signal degrade (BER becomes worse than the predetermined threshold), and so on. The second one is activated by administrative events, such as fibre rerouting, fibre replacement, etc. Both types should be possible in the GPON system, if required, even though they are optional functions. The switching mechanism is generally realized by the OAM function, therefore, the required OAM information field should be reserved in the OAM frame.

Nokia of America Corporation
IPR2023-00960, Ex. 1023
AT&T Ex. 1023
Ex. 1023.013

Figure 3 shows the duplex system model for the access network. The relevant part of the protection in the GPON system should be a part of the protection between the ODN interface in the OLT and the ODN interface in the ONU via the ODN, excluding the SNI redundancy in the OLT.

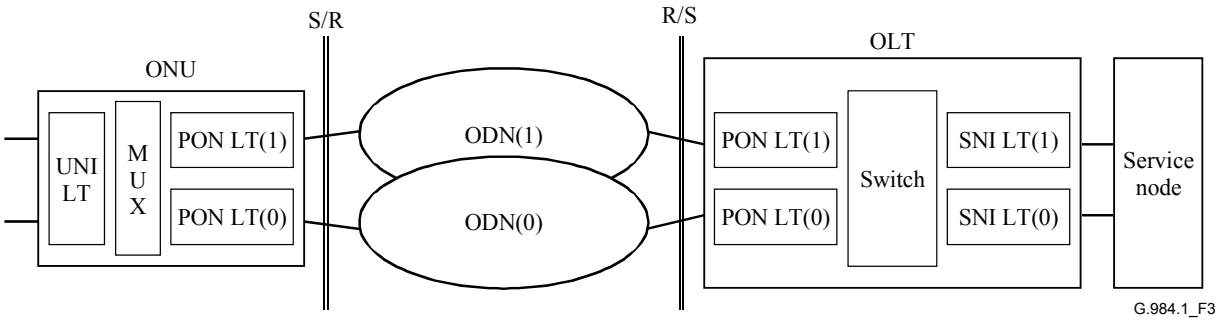

Figure 3/G.984.1 – Duplex system model

14.2 Possible duplex GPON configurations and characteristics

There can be several types of duplex GPON systems, as shown in Figures 4a to d. The control protocols for each configuration should be specified independently from one another.

For example, no switching protocol is required for the OLT/ONU in Figure 4a, since the switching is only applied for the optical fibres. Also, in Figure 4b, no switching protocol is required since the switching is carried out only in the OLT.

14.2.1 Configuration examples

Type A: The first configuration doubles only the optical fibres, as shown in Figure 4a. In this case, the ONUs and OLT are singular.

Type B: The second configuration (Figure 4b) doubles the OLTs and the optical fibres between the OLTs and the optical splitter, and the splitter has two input/output ports on the OLT side. This configuration reduces the cost of duplexing the ONUs, although only the OLT side can be recovered.

Type C: The third configuration (Figure 4c) doubles not only the OLT side facilities but also the ONU side. In this configuration, recovery from failure at any point is possible by switching to the standby facilities. Therefore, the full duplex cost enables a high reliability.

Type D: If the ONUs are installed in the customer buildings, the in-house wiring may or may not be duplexed. Additionally, if each ONU is owned by a different user, the reliability requirement depends on each user and only a limited number of ONUs may have the duplex configuration. Based on this consideration, the last configuration (Figure 4d) permits a partial duplexing on the ONU side. This Figure shows an example where there are duplex (ONU#1) and single (ONU#N) ONUs. Its key principles are:

1) using double N:2 optical splitters to connect PON LT(0) in ONU#1 to splitter N(0) and PON LT(1) in ONU#1 to splitter N(1);
2) connecting PON LT in ONU#N to either optical splitter (because it is single);
3) using double 2:1 optical splitters to connect PON LT(0) in the OLT to splitter(0) and PON LT(1) in the OLT to splitter(1);
4) connecting double N:2 optical splitters and double 2:1 optical splitters, where one port of splitter(1) is connected to splitter N(0), and one port of splitter(0) to splitter N(1);
5) using the cold standby method in both OLT and ONUs to avoid optical signal collision from PON LT(0) and PON LT(1) in the OLT, or PON LT(0) and PON LT(1) in ONU #1.

Nokia of America Corporation
IPR2023-00960, Ex. 1023
AT&T Ex. 1023
Ex. 1023.014

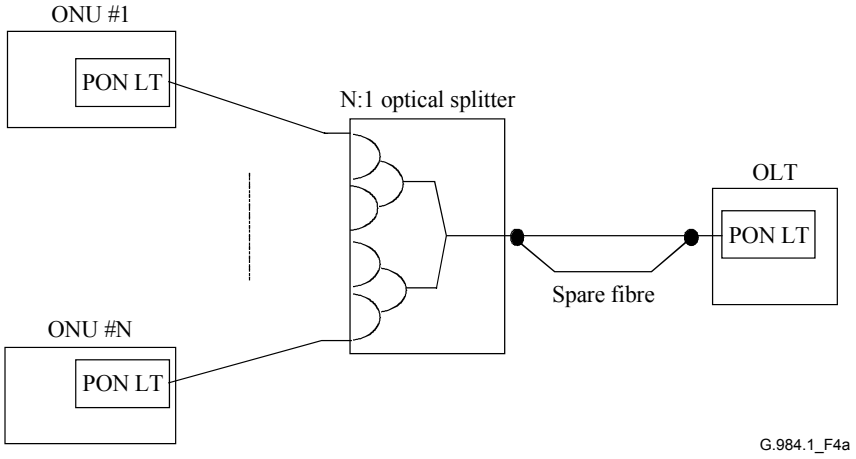

Figure 4a/G.984.1 – Duplex GPON system: Fibre duplex system

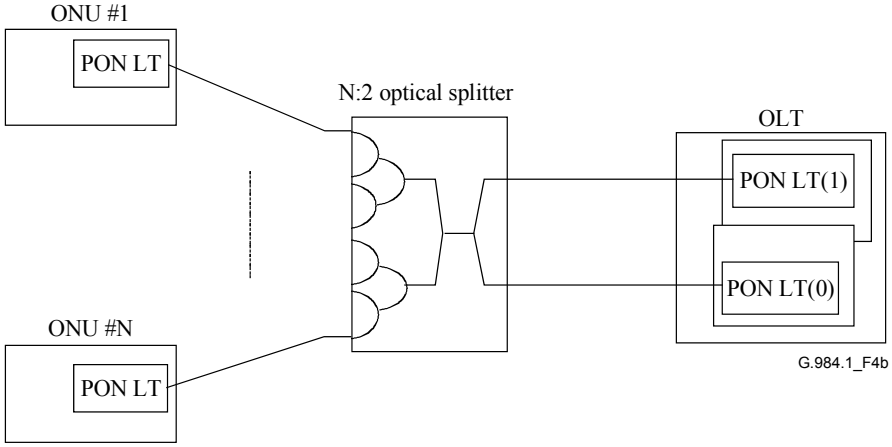

Figure 4b/G.984.1 – Duplex GPON system: OLT-only duplex system

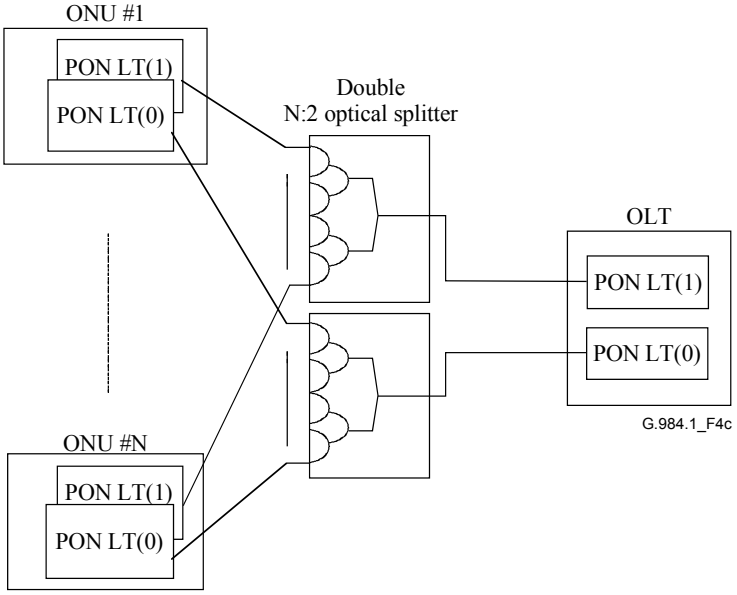

Figure 4c/G.984.1 – Duplex GPON system: Full duplex system

Nokia of America Corporation
IPR2023-00960, Ex. 1023
AT&T Ex. 1023
Ex. 1023.015

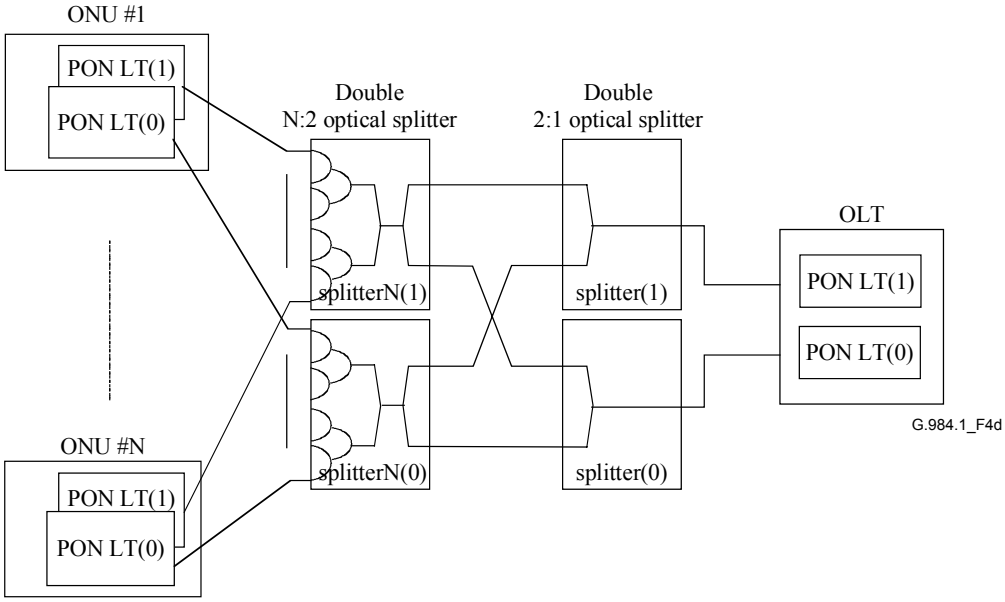

Figure 4d/G.984.1 – Duplex GPON system: Partial duplex configuration

14.2.2 Characteristics

Type A: In this case, signal loss or even frame loss is inevitable in the switching period. However, all the connections between the service node and the terminal equipment should be held after this fibre switching.

Type B: This configuration requires cold standby of the spare circuit in the OLT side. In this case, signal loss or even frame loss is, in general, inevitable in the switching period. However, all the connections supported between the service node and the terminal equipment should be held after this switching.

Type C: In this case, the hot standby of the spare receiver circuits is possible in both ONU and OLT sides. In addition, hitless switching (without frame loss) is also possible in this configuration.

Type D: The characteristics of this type are the same as Type B.

14.3 Requirements

i) The protection switching function should be optional.

ii) Both automatic protection switching and forced switching are possible in the GPON system, if required, even though they are optional functions.

iii) All the configuration examples of 14.2 will be possible, even though they are optional functions.

iv) The switching mechanism is generally realized by the OAM function, therefore, the required OAM information field must be reserved in the OAM frame.

v) All the connections supported between the service node and the terminal equipment should be held after switching.

Regarding the last requirement, one implementation of the POTS service node (exchange) requires the frame loss period to be less than 120 ms. If the frame loss period becomes longer than that, the service node disconnects the call, and the call set-up is required again after the protection switching. Since GPON supports the emulation of conventional services, such as POTS and ISDN, this value should be taken into consideration.

Nokia of America Corporation
IPR2023-00960, Ex. 1023
AT&T Ex. 1023
Ex. 1023.016

14.4 Required information fields for OAM frame

According to the analogy of the SDH system, protection switching requires less than ten codes to be used for both upstream and downstream, which will be realized by the field of the OAM frame. The field mapping of the OAM frame for the protection will be required to be defined.

15 Security

Due to the multicast nature of the PON, GPON needs a security mechanism adapting the following requirements:

- To prevent other users from easily decoding the downstream data;
- To prevent other users from masquerading as another ONU/ONT or user;
- To allow cost-effective implementation.

Appendix I

Examples of services, UNI and SNI

This appendix describes the examples of services, UNI and SNI, which are required by operators.

I.1 Examples of services

The examples of services that GPON are required to support are shown in Table I.1, along with relevant remarks.

Table I.1/G.984.1 – Examples of services and related remarks

Service category (Note 1)	Service	Remarks
Data service	Ethernet (Note 2)	Standardized in IEEE 802.3. Comply with IEEE 802.1D.
PSTN	POTS	Mean signal transfer delay time between T-V (or (a)-V) should be less than 1.5 ms. If echo cancellation is used in the network, the mean signal transfer delay time between T-V (or (a)-V) on the PON-based system may be longer, provided End-to-End transfer delay requirements are met. Synchronize with the network's 8 kHz clock. Signal on the T reference point and V reference point must be continuous.
	ISDN (BRI)	Bearer rate is 144 kbit/s. Mean signal transfer delay time between T-V (or (a)-V) should be less than 1.5 ms. Synchronize with the network's 8 kHz clock.
	ISDN (PRI)	Bearer rate is 1.544 Mbit/s and 2.048 Mbit/s. Mean signal transfer delay time between T-V (or (a)-V) should be less than 1.5 ms. Synchronize with the network's 8 kHz clock.

Nokia of America Corporation
IPR2023-00960, Ex. 1023
AT&T Ex. 1023
Ex. 1023.017

Table I.1/G.984.1 – Examples of services and related remarks

Service category (Note 1)	Service	Remarks
Private Line	T1	Bearer rate is 1.544 Mbit/s. Mean signal transfer delay time between T-V (or (a)-V) should be less than 1.5 ms. Synchronize with the network's 8 kHz clock.
	E1	Bearer rate is 2.048 Mbit/s. Mean signal transfer delay time between T-V (or (a)-V) should be less than 1.5 ms. Synchronize with the network's 8 kHz clock.
	DS3	Bearer rate is 44.736 Mbit/s. Synchronize with the network's 8 kHz clock.
	E3	Bearer rate is 34.368 Mbit/s. Synchronize with the network's 8 kHz clock.
	ATM	Standardized in ITU-T Rec. I.361. Complies with ITU-T Rec. I.356.
Video	Digital video	Deliver with same quality as class.1 specified in ITU-T I.356 or rt-VBR/CBR specified in ATM-Forum.
NOTE 1 – Service category is merely an index. It is not meaningful in itself, but it is useful in visualizing the services. NOTE 2 – Ethernet service is mainly to transmit the data such as IP, which includes VoIP, video streams coded by MPEG-2 or MPEG-4, and so on.		

I.2 Examples of UNI

In this Appendix, UNI is defined as the interface that includes the following conditions:

- described by a well-known standard.
- includes a physical layer aspect.

Some UNIs are provided via an AF, so it is not mandatory that the ONU/ONT support those interfaces.

Examples of UNIs, physical interfaces and services that they provide are shown in Table I.2.

Table I.2/G.984.1 – Examples of UNI and services

UNI (Note 1)	Physical interface (Note 2)	Service (Note 3)
10BASE-T (IEEE802.3)	–	Ethernet
100BASE-TX (IEEE802.3)	–	Ethernet
1000BASE- T (IEEE802.3)	–	Ethernet
ITU-T Rec. I.430	–	ISDN (BRI)
ITU-T Rec. I.431	–	ISDN (PRI), T1, ATM
ITU-T Rec. G.703	PDH	DS3, ATM, E1, E3
ITU-T Rec. I.432.5	25 Mbit/s metallic interface	ATM
ITU-T Rec. G.957	STM-1,4	ATM
ANSI T1.102, ANSI T1.107	PDH	T1, DS3

Nokia of America Corporation
IPR2023-00960, Ex. 1023
AT&T Ex. 1023
Ex. 1023.018

Table I.2/G.984.1 – Examples of UNI and services

NOTE 1 – There are many other services accommodated in GPON, but those services do not have specified UNIs. NOTE 2 – Each item in the "Physical Interface" column is illustrated by the corresponding entry in the "UNI" column. NOTE 3 – The column labeled "Service" shows which services can be supported by the physical interface.

I.3 Examples of SNI

In this appendix, SNI is defined as the interface that includes the following conditions:

- described by a well-known standard;
- includes a physical layer aspect.

Examples of SNIs, physical interfaces and services that they provide are shown in Table I.3.

Table I.3/G.984.1 – Examples of SNI and services

SNI (Note 1)	Physical interface (Note 2)	Service (Note 3)
1000BASE- X (IEEE802.3)	–	Ethernet
ITU-T Rec. G.965	V5.2	POTS, ISDN(BRI), ISDN(PRI)
ITU-T Rec. G.703	PDH	DS3, ATM, E1, E3
ITU-T Rec. G.957	STM-1,4,16	E1, ATM
ANSI T1.107	PDH	T1, DS3
ANSI T1.105.06, ANSI T1.117	OC3, OC12	T1, DS3, ATM
NOTE 1 – There are many other services accommodated in GPON, but those services do not have specified SNIs. NOTE 2 – Each item in the "Physical Interface" column is illustrated by the corresponding entry in the "SNI" column. NOTE 3 – The column labeled "Service" shows which services can be supported by the physical interface.		

Appendix II

Bibliography

The following ITU-T Recommendations and other references are referred in this appendix as bibliography (non-normative reference).

[App.II-1] ITU-T Recommendation G.703 (2001), *Physical/electrical characteristics of hierarchical interfaces*.

[App.II-2] ITU-T Recommendation G.957 (1999), *Optical interfaces for equipments and systems relating to the synchronous digital hierarchy*.

[App.II-3] ITU-T Recommendation G.965 (2001), *V-Interfaces at the digital local exchange (LE) – V5.2 interface (based on 2048 kbit/s) for the support of access network (AN)*.

[App.II-4] ITU-T Recommendation I.356 (2000), *B-ISDN ATM layer cell transfer performance*.

[App.II-5] ITU-T Recommendation I.361 (1999), *B-ISDN ATM layer specification*.

Nokia of America Corporation
IPR2023-00960, Ex. 1023
AT&T Ex. 1023
Ex. 1023.019

[App.II-6] ITU-T Recommendation I.430 (1995), *Basic user-network interface – Layer 1 specification*.

[App.II-7] ITU-T Recommendation I.431 (1993), *Primary rate user-network interface – Layer 1 specification*.

[App.II-8] ITU-T Recommendation I.432.5 (1997), *B-ISDN user-network interface – Physical layer specification: 25.600 kbit/s operation*.

[App.II-9] IEEE Standard 802.1D-1998, *Part 3: Media Access Control (MAC) Bridges*.

[App.II-10] IEEE Standard 802.3-2000, *Part 3: Carrier sense multiple access with collision detection (CSMA/CD) access method and physical layer specifications*.

[App.II-11] ANSI T1.102 (1999), *Digital Hierarchy – Electrical Interfaces*.

[App.II-12] ANSI T1.107 (1995), *Digital Hierarchy – Formats Specifications*.

[App.II-13] ANSI T1.105.06 (1996), *Synchronous Optical Network (SONET) – Physical Layer Specification*.

[App.II-14] ANSI T1.117 (1997), *Digital Hierarchy Optical Interface Specifications (Short Reach)*.

Nokia of America Corporation
IPR2023-00960, Ex. 1023
AT&T Ex. 1023
Ex. 1023.020

SERIES OF ITU-T RECOMMENDATIONS

Series A	Organization of the work of ITU-T
Series B	Means of expression: definitions, symbols, classification
Series C	General telecommunication statistics
Series D	General tariff principles
Series E	Overall network operation, telephone service, service operation and human factors
Series F	Non-telephone telecommunication services
Series G	**Transmission systems and media, digital systems and networks**
Series H	Audiovisual and multimedia systems
Series I	Integrated services digital network
Series J	Cable networks and transmission of television, sound programme and other multimedia signals
Series K	Protection against interference
Series L	Construction, installation and protection of cables and other elements of outside plant
Series M	TMN and network maintenance: international transmission systems, telephone circuits, telegraphy, facsimile and leased circuits
Series N	Maintenance: international sound programme and television transmission circuits
Series O	Specifications of measuring equipment
Series P	Telephone transmission quality, telephone installations, local line networks
Series Q	Switching and signalling
Series R	Telegraph transmission
Series S	Telegraph services terminal equipment
Series T	Terminals for telematic services
Series U	Telegraph switching
Series V	Data communication over the telephone network
Series X	Data networks and open system communications
Series Y	Global information infrastructure and Internet protocol aspects
Series Z	Languages and general software aspects for telecommunication systems

Printed in Switzerland
Geneva, 2003

Nokia of America Corporation
IPR2023-00960, Ex. 1023
Ex. 1023.022

AT&T Ex. 1023