IN THE UNITED STATES DISTRICT COURT
FOR THE EASTERN DISTRICT OF TEXAS
MARSHALL DIVISION

NEXTGEN INNOVATIONS, LLC,	§	
	§	
Plaintiff,	§	
	§	
v.	§	Civil Action No. 2:22-cv-0307-JRG-RSP
	§	(Lead Case)
FUJITSU NETWORK COMMUNICATIONS,	§	
INC., ET AL.,	§	
	§	
Defendants.	§	

CLAIM CONSTRUCTION ORDER

Before the Court is the Opening Claim Construction Brief (Dkt. No. 176) filed by Plaintiff NextGen Innovations, LLC, and the Responsive Claim Construction Brief (Dkt. No. 187) filed by Defendants Nokia of America Corporation, Nokia Corporation, and Nokia Solutions and Networks Oy ("Nokia"), Infinera Corporation ("Infinera"), AT&T Services, Inc. and AT&T Corp. ("AT&T"), and Fujitsu Network Communications, Inc., Fujitsu Limited, Fujitsu Optical Components Limited, and Fujitsu Optical Components America, Inc. ("Fujitsu") (collectively, "Defendants"). Also before the Court is Plaintiff's Reply Claim Construction Brief (Dkt. No. 193), Plaintiff's Supplemental Opening Claim Construction Brief (Dkt. No. 201), Defendants' Responsive Supplemental Claim Construction Brief (Dkt. No. 204), and Plaintiff's Supplemental Reply Claim Construction Brief (Dkt. No. 205).

The Court held a hearing on November 14, 2023. Both sides filed supplements to their claim construction briefs after the hearing (Dkt. Nos. 222 and 227). Having considered the parties' briefing along with arguments of counsel, the Court resolves the disputes as ordered herein.

I. BACKGROUND

Plaintiff alleges infringement of five patents across three patent families: United States Patents Nos. 8,238,754; 8,374,508; 9,887,795; 10,263,723; and 10,771,181 (collectively, the "patents-in-suit"). (Dkt. No. 176, Ex. 1-5.) The '795 patent, the '723 patent, and the '181 patent all relate to M-ary modulation and are therefore referred to as the "M-ary patents." They are asserted against all Defendants. (*Id.* at 1.) The '754 patent is asserted against Fujitsu and Nokia. (*Id.* at 2.) The '508 patent is asserted against AT&T. (*Id.*)

The Court provided the parties with preliminary constructions in advance of the November 14, 2023, hearing.

II. LEGAL STANDARDS

"'[T]he claims of a patent define the invention to which the patentee is entitled the right to exclude.'" *Phillips v. AWH Corp.*, 415 F.3d 1303, 1312 (Fed. Cir. 2005) (*en banc*) (quoting *Innova/Pure-Water, Inc. v. Safari Water Filtration Sys., Inc.*, 381 F.3d 1111, 1115 (Fed. Cir. 2004)). "[T]he court has the power and obligation to construe as a matter of law the meaning of language used in the patent claim." *Markman v. Westview Instruments, Inc.*, 52 F.3d 967, 979 (Fed. Cir. 1995) (*en banc*); *aff'g,* 517 U.S. 370, 390 (1996).

To ascertain the meaning of claims, courts look to three primary sources: the claims, the specification, and the prosecution history. *Markman*, 52 F.3d at 979. The specification must contain a written description of the invention that enables one of ordinary skill in the art to make and use the invention. *Id.* A patent's claims must be read in view of the specification, of which they are a part. *Id.* For claim construction purposes, the description may act as a sort of dictionary, which explains the invention and may define terms used in the claims. *Id.* "One purpose for examining the specification is to determine if the patentee has limited the scope of the claims."

Watts v. XL Sys., Inc., 232 F.3d 877, 882 (Fed. Cir. 2000).

When construing claims, "[t]here is a heavy presumption that claim terms are to be given their ordinary and customary meaning." *Aventis Pharm. Inc. v. Amino Chems. Ltd.*, 715 F.3d 1363, 1373 (Fed. Cir. 2013) (citing *Phillips*, 415 F.3d at 1312–13). Courts must therefore "look to the words of the claims themselves . . . to define the scope of the patented invention." *Id.* (citations omitted). "[T]he ordinary and customary meaning of a claim term is the meaning that the term would have to a person of ordinary skill in the art in question at the time of the invention, *i.e.,* as of the effective filing date of the patent application." *Phillips,* 415 F.3d at 1313. This "person of ordinary skill in the art is deemed to read the claim term not only in the context of the particular claim in which the disputed term appears, but in the context of the entire patent, including the specification." *Id.*

The patentee is free to be his own lexicographer, but any special definition given to a word must be clearly set forth in the specification. *Intellicall, Inc. v. Phonometrics, Inc.*, 952 F.2d 1384, 1388 (Fed. Cir. 1992). As the Supreme Court stated long ago, "in case of doubt or ambiguity it is proper in all cases to refer back to the descriptive portions of the specification to aid in solving the doubt or in ascertaining the true intent and meaning of the language employed in the claims." *Bates v. Coe*, 98 U.S. 31, 38 (1878). Although the specification may indicate that certain embodiments are preferred, particular embodiments appearing in the specification will not be read into the claims when the claim language is broader than the embodiments. *Electro Med. Sys., S.A. v. Cooper Life Sciences, Inc.*, 34 F.3d 1048, 1054 (Fed. Cir. 1994).

The prosecution history also continues to play an important role in claim interpretation. Like the specification, the prosecution history helps to demonstrate how the inventor and the United States Patent and Trademark Office ("PTO") understood the patent. *Phillips*, 415 F.3d at

1317. Because the file history, however, "represents an ongoing negotiation between the PTO and the applicant," it may lack the clarity of the specification and thus be less useful in claim construction proceedings. *Id.* Nevertheless, the prosecution history is intrinsic evidence that is relevant to the determination of how the inventor understood the invention and whether the inventor limited the invention during prosecution by narrowing the scope of the claims. *Id.*; *see Microsoft Corp. v. Multi-Tech Sys., Inc.*, 357 F.3d 1340, 1350 (Fed. Cir. 2004) (noting that "a patentee's statements during prosecution, whether relied on by the examiner or not, are relevant to claim interpretation").

Intrinsic evidence, therefore, is the primary resource for claim construction. *See Power-One, Inc. v. Artesyn Techs., Inc.*, 599 F.3d 1343, 1348 (Fed. Cir. 2010) (citing *Phillips*, 415 F.3d at 1312). But for claim terms with less-apparent meanings, courts consider " 'those sources available to the public that show what a person of skill in the art would have understood disputed claim language to mean[,] [including] the words of the claims themselves, the remainder of the specification, the prosecution history, and extrinsic evidence concerning relevant scientific principles, the meaning of technical terms, and the state of the art.' " *Phillips*, 415 F.3d at 1314 (quoting *Innova*, 381 F.3d at 1116). In those situations, "the district court will need to look beyond the patent's intrinsic evidence and to consult extrinsic evidence in order to understand, for example, the background science or the meaning of a term in the relevant art during the relevant time period." *Teva Pharm. USA, Inc. v. Sandoz, Inc.*, 135 S. Ct. 831, 841 (2015) (citation omitted). "In cases where those subsidiary facts are in dispute, courts will need to make subsidiary factual findings about that extrinsic evidence. These are the 'evidentiary underpinnings' of claim construction that we discussed in *Markman*, and this subsidiary factfinding must be reviewed for clear error on appeal." *Id.* (citing 517 U.S. 370).

However, the intrinsic record may not be sacrificed in favor of extrinsic evidence. According to *Phillips*, reliance on dictionary definitions, for example, at the expense of the specification had the effect of "focus[ing] the inquiry on the abstract meaning of words rather than on the meaning of claim terms within the context of the patent." *Id.* at 1321.

The Supreme Court of the United States has "read [35 U.S.C.] § 112, ¶ 2 to require that a patent's claims, viewed in light of the specification and prosecution history, inform those skilled in the art about the scope of the invention with reasonable certainty." *Nautilus, Inc. v. Biosig Instruments, Inc.*, 572 U.S. 898, 910, 134 S. Ct. 2120, 2129 (2014). "[A] patent is invalid for indefiniteness if its claims, read in light of the specification delineating the patent, and the prosecution history, fail to inform, with reasonable certainty, those skilled in the art about the scope of the invention." *Id*. The claims "must be precise enough to afford clear notice of what is claimed," but that consideration must be made while accounting for the inherent limitations of language. *Id.* at 908. "Indefiniteness must be proven by clear and convincing evidence." *Sonix Tech. Co. v. Publ'ns Int'l, Ltd.*, 844 F.3d 1370, 1377 (Fed. Cir. 2017).

III. THE LEVEL OF ORDINARY SKILL IN THE ART

The level of ordinary skill in the art is the skill level of a hypothetical person who is presumed to have known the relevant art at the time of the invention. *In re GPAC*, 57 F.3d 1573, 1579 (Fed. Cir. 1995). In resolving the appropriate level of ordinary skill, courts consider the types of and solutions to problems encountered in the art, the speed of innovation, the sophistication of the technology, and the education of workers active in the field. *Id.* Importantly, "[a] person of ordinary skill in the art is also a person of ordinary creativity, not an automaton." *KSR Int'l Co. v. Teleflex Inc.*, 550 U.S. 398, 421 (2007).

The parties, through their experts, have each characterized a person of ordinary skill in the art as someone with the equivalent of a bachelor's degree in electrical or computer engineering from an accredited institution and 2-3 years of professional experience with optical communications and networking. (*See* Dkt. No. 176-41, ¶19; Dkt. 187-2, ¶ 39, 41.; Dkt. 187-3, ¶ 40.) For purposes of this Order, the Court adopts this characterization of a skilled artisan and notes neither party contends resolving the proper constructions for the disputed terms turns on resolving the differences between their proposed skill levels.

IV. DISPUTED TERMS IN THE "M-ARY" PATENTS

The '795 patent, the '723 patent, and the '181 patent all bear the same title, "System and Method for Performing High-Speed Communications Over Fiber Optical Networks," and the same Abstract, which states:

> Processing a received optical signal in an optical communication network includes equalizing a received optical signal to provide an equalized signal, demodulating the equalized signal according to an m-ary modulation format to provide a demodulated signal, decoding the demodulated signal according to an inner code to provide an inner-decoded signal, and decoding the inner-decoded signal according to an outer code. Other aspects include other features such as equalizing an optical channel including storing channel characteristics for the optical channel associated with a client, loading the stored channel characteristics during a waiting period between bursts on the channel, and equalizing a received burst from the client using the loaded channel characteristics.

1. "Recovering A Clock Data Information," ('795 Patent, Claim 1)

Plaintiff's Construction	Defendants' Construction
No construction necessary	Indefinite

Claim 1 of the '795 patent reads as follows:

> 1. A method for m-ary modulation communication by a pluggable optical transceiver module comprising of:

receiving a first electrical binary data signal through a system interface of the pluggable optical transceiver module;

converting the first electrical binary data signal in the pluggable optical transceiver module to a first electrical m-ary modulation signal;

amplifying the first electrical m-ary modulation signal to drive an optical transmitter in the pluggable optical transceiver module;

emitting a first optical signal on a first wavelength responsive to and representative of the amplified first electrical m-ary modulation signal from the optical transmitter in the pluggable optical transceiver module;

receiving a second optical signal on a second wavelength and producing an electrical signal from an optical detector in the pluggable optical transceiver module;

amplifying the electrical signal to facilitate **clock and data recovery** in the pluggable optical transceiver module;

recovering a clock data information from the amplified electrical signal to produce a second m-ary modulation signal in the pluggable optical transceiver module;

demodulating the second m-ary modulation signal to a second electrical binary data signal in the pluggable optical transceiver module; and

transmitting the second electrical binary data signal through the system interface of the pluggable optical transceiver module.

<u>Plaintiff's position:</u>

Referring to the claim language, Plaintiff contends that "recovering a clock data information *from the amplified electrical signal*" is clearly linked to the "*amplifying the electrical signal to facilitate* clock and data recovery" in the preceding step in that the information ("clock data information") is being recovered from the "amplified electrical signal." (Dkt. No. 176 at 3.) Plaintiff points to the "Clock Data Recovery (CDR)" circuit in the specification that "recovers clock and data signals" from an electrical signal received from an amplifier to show the specification uses "clock data" and "clock and data" interchangeably. (*Id.* at 3-4.) Plaintiff further contends the IPR file history is consistent with this usage because all three petitioners, including Nokia and Infinera, and their experts relied upon the plain and ordinary meaning of this term which suggests that it is not indefinite. (*Id.* at 4.) In particular, Nokia and Infinera pointed in the prior art to a "clock data recovery unit," "clock recovery circuit," "clock/data recovery (CDR) circuitry,"

and "clock and data recovery circuits" as disclosing step [1.g.]'s "clock data information." (*Id.* at 5.) Moreover, Plaintiff's expert, Dr. Baker, considers CDR to be a well-known standard process used for clock and data synchronization in a serial data transmission that involves recovery of the required information from the signal itself as opposed to using additional bandwidth to facilitate synchronization. (*Id.* at 4.)

Defendants' position:

Defendants contend that the term "recovering a clock data information" is indefinite for two reasons. First, the two references to "clock and data recovery" and "clock data information" must have two different meanings because they use a different arrangement of words. Second, the latter phrase being preceded by the indefinite article "a" indicates that it is a term being introduced for the first time with no antecedent basis. Defendants rely upon Dr. Gitlin's opinion that a POSITA would understand "clock and data recovery" but would not understand the meaning of "clock data information" because it is not a term of art and could ambiguously refer to clock information, data information, or some other kind of information. (Dkt. No. 187 at 2.) Instead, a POSITA would understand that when an optical signal is converted into the electrical domain, one type of signal processing would extract clock information before recovering data information, therefore recovering clock information is separate and distinct from recovering data. (*Id*. at 3.)

Defendants go on to point out that the phrase "clock data information" is not supported by intrinsic evidence because it does not appear in the specification. Rather, the specification uses "clock" and "data" as two distinct types of information where, for example, it discloses a transceiver that can "recover encoded data ***and/or*** clock signals" and "process the data ***and*** clock signals." '795 Patent, Ex. M at 6:65-67, 7:57-59 (emphasis added). (Dkt. No. 187 at 4.) Defendants contend the patentee knew how to claim clock and data information by using that phrase in the

claims and specification but chose to claim "clock data information" instead. Therefore, the patentee implicitly intended distinct meanings, but did not provide any guidance to help a POSITA understand what that intended difference is. (*Id.* at 4-5.)

Defendants argue the related '723 patent and '191 patents confirm the distinction in meaning because they both use the phrase "recovering clock ***and*** data information" (emphasis added). (Dkt. No. 187 at 5.) Defendants also state the prosecution history suggests the same because the "a" in "recovering a clock data information" was added via a claim amendment. (*Id.*) As a POSITA would understand that to signify the first time "clock data information" is introduced in a claim, Defendants assert it must be something different than the "clock and data" information amplified in the preceding step. (*Id.* at 6.)

Analysis:

The specification describes a transceiver that, on the receiving side, receives light through a fiber optic interface and converts the photocurrent into an electrical voltage signal. *See* '795 patent, Col. 10:38-46. The electrical voltage signal is transmitted to an amplifier to increase its resolution and sent on to a "Clock Data Recovery (CDR)" circuit that "recovers clock and data signals" on the received data. Col. 10:51-59. The CDR is identified as the 320*a* and 320*b* block in Figure 3. In other embodiments, the specification goes on to identify the same "clock data recovery" functions in reference to 320*a* and 320*b* in Figure 4 and 5. *See* Col. 11:8-52; 12:12. Indeed, the CDR circuit identified as 320*a* and 320*b* appears in each of Figures 3-7 consistently, with the exception of Figure 5, where the CDR circuit also appears but is erroneously labeled as

321*a* and 321*b*[1]. This suggests that the inventor intended to disclose a Clock Data Recovery (CDR) circuit that is capable of recovering clock and data signals on received data.

Turning to the words in claim 1, the relevant portion states:

> A method for m-ary modulation communication by a pluggable optical transceiver module comprising of:
>
> ***
>
> amplifying the electrical signal to facilitate **clock and data recovery** in the pluggable optical transceiver module;
>
> **recovering a clock data information** from the amplified electrical signal to produce a second m-ary modulation signal in the pluggable optical transceiver module;
>
> ***

The clear language of the claim shows that the two claim elements must be read together for proper understanding. "[R]ecovering a clock data information *from the amplified electrical signal*" necessarily refers to the preceding "electrical signal" that is amplified in order "to facilitate clock and data recovery." Only once the electrical signal is amplified, can the "clock data information" be recovered from the amplified electrical signal. The earlier element of "amplifying the electrical signal" explains the purpose of the amplification and the latter element of "recovering a clock data information from the amplified electrical signal" fulfills that purpose. Such a reading would be clear to a person of skill in the art. Therefore, the phrase "recovering a clock data information" is not indefinite. Rather, it refers to and is informed by the "clock and data" intended to be recovered from amplifying the electrical signal. The Court does not find there to be a lack of antecedent basis as it is not unclear to what element the limitation "a clock data information" is referring. MPEP 2173.05(e). *See also Ex parte Porter*, 25 USPQ2d 1144, 1145 (Bd. Pat. App. & Inter. 1992) ("controlled stream of fluid" provided reasonable antecedent basis for "the controlled fluid").

[1] This identification appears to be in error because the specification identifies 321*a* and 321*b* as the analog to digital conversion. Col. 11:35-45.

This is consistent with the specification and when read in context of the dependent claims. The specification repeatedly discloses a CDR in various embodiments that "recovers clock and data signals" on the received data. Once the "clock and data signals" are recovered, the equalization circuit performs equalization on the received data before providing it to the demodulator. Col. 10:51-56. The CDR and equalization block, acting consecutively, may implement a blind equalization method or decision-directed equalization. Col. 10:56-61. Dependent claims 6-9 describe these versions of equalization performed on the "clock data information" for the purpose of removing noise. Noise is removed "from the received data," as explained in the specification. '795 patent, col. 12:11-17. Therefore, the data must be a part of the claims.

Applying Defendants' multiple variable constructions that "clock data information" can mean either just clock information, data information, or clock and data information makes no sense when read in context with the claims. Equalization would not be performed on only a clock signal, as explained above. Nor would a clock signal, alone, be de-modulated and transmitted as the rest of claim 1 requires. When questioned about this missing data during the hearing, Defendants suggested the data signal could come from somewhere else not described in the claims, despite the claim being a "method for m-ary modulation communication," and the repeated reference to receiving, converting, and transmitting "data." The Court simply does not find Defendants' multiple variable constructions to be reasonable when read as part of the claim language and specification.

Defendants' IPR position does not support their indefiniteness argument. Although an IPR petition cannot assert indefiniteness, and Petitioners' advancement of a plain and ordinary construction to the term does not move the needle here, the Court notes that Infinera, Nokia, and

their two IPR experts repeatedly pointed to a "clock data recovery unit," "clock recovery circuit," "clock/data recovery (CDR) circuitry," and "clock and data recovery circuits" as disclosing step [1.g.]'s "clock data information" in the prior art. (*See, e.g.,* Dkt. No. 176-13 at 40).

Extrinsic evidence further supports a finding of definiteness. Defendants' own cited extrinsic evidence explains that the CDR circuit is a well-known element in optical receivers and that its job is to "extract pure clocks from the corrupted input data and regenerate clean data output by the extracted clocks," thus outputting both clock and data information. (*See, e.g.,* Dkt. No. 176-7 at 1213).

The Court therefore finds the phrase "recovering a clock data information" is **not indefinite** because it refers to the "clock and data recovery" facilitated by the amplified electrical signal in the preceding step.

2. The Antecedent Basis Terms

Claim term	Plaintiff's Construction	Defendants' Construction
"the amplified first electrical m-ary modulation signal" '795 patent, claim 1.[d.]	The antecedent basis is "amplifying the first electrical m-ary modulation signal"	The antecedent basis is "amplifying the first electrical m-ary modulation signal **to drive an optical transmitter in the pluggable optical transceiver module"**
"the amplified electrical signal" '795 patent, claim 1.[g.]	The antecedent basis is "amplifying the electrical signal"	The antecedent basis is "amplifying the electrical signal **to facilitate clock and data recovery in the pluggable optical transceiver module**
"the equalized second m-ary modulation signal" '723 patent, claim 1.[k.] '181 patent, claims 1.[j.], 22.[j.]-23.[j.]	The antecedent basis is "equalization on the second m-ary modulation signal"	The antecedent basis is "an equalizer for performing equalization on the second mary modulation signal **to remove noise**"

The parties agree there is an antecedent basis to each of the three claim terms identified above but they disagree on what exactly the antecedent basis is. The first portion of the antecedent basis is identical in both the Plaintiff and Defendants' proposed constructions; however, Defendants include the phrase in bold that identifies the purpose of the claimed action.

The first two disputed antecedent basis terms appear in Claim 1 of the '795 patent as follows:

> 1. A method for m-ary modulation communication by a pluggable optical transceiver module comprising of:
>
> ***
>
> [1.c] amplifying the first electrical m-ary modulation signal to drive an optical transmitter in the pluggable optical transceiver module;
> [1.d] emitting a first optical signal on a first wavelength responsive to and representative of **the amplified first electrical m-ary modulation signal** from the optical transmitter in the pluggable optical transceiver module;
>
> ***
>
> [1.f] amplifying the electrical signal to facilitate clock and data recovery in the pluggable optical transceiver module;
> [1.g] recovering a clock data information from **the amplified electrical signal** to produce a second m-ary modulation signal in the pluggable optical transceiver module;
>
> ***

The third disputed antecedent basis term appears in Claim 1 of the '723 patent as follows:

> 1. A pluggable optical transceiver module comprising of:
>
> ***
>
> an equalizer for performing equalization on the second m-ary modulation signal to remove noise, and
> an m-ary demodulator for decreasing the number of bits per symbol in **the equalized second m-ary modulation signal** to produce a second electrical encoded data signal, and
>
> ***

<u>Plaintiff's position:</u>

Plaintiff contends that for each disputed claim phrase, the antecedent is the "signal" in the immediately preceding claim element as modified by the action word in that previous element without the additional language Defendants propose, which refers to the purpose of the acted-on signal and is unnecessary to understanding the phrase. (Dkt. 176 at 6.) According to Plaintiff, Defendants already conceded to Plaintiff's construction through expert testimony from Dr. Gitlan and the IPR petitions. (*Id.* at 7.)

Defendants' position:

Defendants contend the claim language shows the antecedent bases to be the entire portions of the preceding claim elements because the disputed signals are fully formed, meaning they have already been amplified or equalized, respectively, pursuant to the preceding step. Thus, the complete description is required to make sense of the completed process. (Dkt. 187 at 9-10.) Defendants further argue the complete claim language is necessary to accurately identify the correct new signal that was created in case of ambiguity that *any* amplifying or equalizing operation can provide the antecedent basis. (*Id.* at 11.)

Analysis:

There appears to be no dispute between the parties that the three disputed terms are not indefinite and have an antecedent basis in the preceding step of their respective claims. The only dispute is whether the antecedent basis is the whole preceding step or a portion of it, as identified in the table above.

The importance of claim terms having proper antecedent basis is to ensure that elements in a claim are clear in reference to an earlier recitation of that element, particularly where there are multiple instances of that element. MPEP 2173.05(e) ("if two different levers are recited earlier in the claim, the recitation of 'said lever' in the same or subsequent claim would be unclear where it

is uncertain which of the two levers was intended.") Despite Defendants' concern about ambiguity, a skilled artisan such as Dr. Gitlan as well as the IPR petitioners' expert seems to understand the reference of these claims to the preceding step limitation in their respective claims.

Additionally, Defendants have not shown there is any uncertainty as to which element the disputed terms refer. For example, Defendants have not shown that "the amplified first electrical m-ary modulation signal" can refer to any other "first electrical m-ary modulation signal" step in claim 1 of the '795 patent. Similarly, Defendants have not shown that "the amplified electrical signal" can refer to any other "electrical signal" step in claim 1 of the '795 patent. Nor have Defendants shown that "the equalized second m-ary modulation signal" can refer to more than one "second m-ary modulation signal" in claim 1 of the '723 patent and claims 1, 22, and 23 of the '181 patent. Therefore, Defendants present no reason that the antecedent basis must include the purpose to clarify an ambiguity in understanding these claim terms.

Defendants' argument about the signals being fully formed is similarly unpersuasive because the additional language about the purpose of the signal does not affect its formation. A signal can be formed for any reason and a signal can be formed for a specific purpose. Irrespective of the reason for forming the signal, the formed signal can be amplified or equalized. The purpose has no effect on whether the signal is fully formed or not.

To the extent Defendants are concerned about the purpose being read out of the claims by this interpretation, the Court notes that the purpose is identified in the preceding element to the disputed terms. Moreover, Plaintiff agreed as much during the hearing. With respect to the amplified terms, for example, Plaintiff agreed that the signal in the amplifying step must be the same signal as in the ensuing emitting step.

The Court therefore finds **the antecedent basis of "the amplified first electrical m-ary modulation signal" to be "the first electrical m-ary modulation signal" amplified in the preceding step; "the amplified electrical signal" to be "the electrical signal" amplified in the preceding step; and "the equalized second m-ary modulation signal" to be "the second m-ary modulation signal" referred to in the preceding limitation**.

3. The Supplemental Briefing Terms

Claim term	Plaintiff's Construction	Infinera and AT&T's Construction
"converting the first electrical binary data signal in the pluggable optical transceiver module to a first electrical m-ary modulation signal" '795 Patent, Claim 1	No construction necessary	converting the first electrical binary data signal in the pluggable optical transceiver module to a first electrical mary modulation signal, **where the converting is not encoding or pre-distortion**
"an m-ary modulator for increasing the number of bits per symbol in the first electrical encoded data signal to produce a first m-ary modulation signal" '723 Patent, claim 1	No construction necessary	an m-ary modulator for increasing the number of bits per symbol in the first electrical encoded data signal to produce a first m-ary modulation signal, **wherein the m-ary modulator is neither an encoder nor a predistorter**
"an m-ary modulator for increasing the number of bits per symbol in the first electrical data signal to produce a first m-ary modulation signal" '181 patent, claims 1, 22-23		

These terms were added by the parties in the supplemental claim construction briefing, are based on the same argument, and are therefore addressed together. The dispute is over whether the statements Patent Owner made in the Patent Owner's Preliminary Response (POPR) filed in the

co-pending IPR proceedings, when distinguishing the claims over prior art, has the effect of disclaiming claim scope. Defendants seek to add the clause in bold, shown above, to reflect such a disclaimer.

Plaintiff's position:

Plaintiff argues that no such disclaimer exists. It contends the POPR does not contain a clear and unambiguous disclaimer of claim scope because each of the statements made by the Patent Owner was simply pointing out contradictions made by Infinera's IPR arguments and Infinera's expert declaration. (Dkt. 201 at 3.) They were not Patent Owner's arguments made in the affirmative and were not about the patent claims. (*Id.*) Plaintiff states that Infinera and its expert argued modulation and encoding are distinct concepts in the "State of the Art," and, based on that characterization of the art by Infinera, Patent Owner responded that Infinera failed to show how the prior art encoder was purportedly the claimed modulator. (*Id.* at 2.)

Defendants'[2] position:

Defendants assert that the Patent Owner's statements in the POPR amount to a clear and unmistakable disavowal of claim scope in the prosecution history. Regarding claim 1 of the '723 patent and claims 1, 22, and 23 of the '181 patent, Defendants contend that the Patent Owner disclaimed the scope of "modulator" when distinguishing over the Vrazel prior art by stating that "neither the encoder nor the encoder and pre-distorter are modulators" and "1) it is admitted that encoders and modulators are separate and distinct concepts; 2) neither the encoder nor the pre-distorter are 'modulators.' " (Dkt. 204 at 4.) According to Defendants, it is irrelevant that Patent Owner was responding to Petitioner's IPR arguments or expert testimony because it made these limiting statements in the affirmative. (*Id.* at 4-5.) Because Patent Owners' statements make clear

[2] "Defendants" in this section refer to Infinera and AT&T.

that the "modulator" of the '723 and '181 patents can be neither an encoder nor a pre-distorter, Defendants ask the court to construe the "modulator" term of the '723 and '181 patents to include the limitation "wherein the m-ary modulator is neither an encoder nor a pre-distorter."

Defendants make the same disclaimer argument for the "converting" step of claim 1 of the '795 patent. (Dkt. 204, 6-7.)

Analysis:

To determine whether the Patent Owner made a clear and unmistakable disclaimer of patent scope, the two cases Defendants cited are instructive.

In *Aylus Networks, Inc. v. Apple Inc.*, 856 F.3d 1353 (Fed. Cir. 2017), the Federal Circuit found an unequivocal and unambiguous disavowal of the control point logic's invocation in the POPR because the patent owner made the affirmative statements that there were "a number of substantial differences ***between the challenged claims and the asserted references***," in that the claims "***require that*** the control point logic and control point proxy logic both be invoked to" accomplish certain tasks. *Id.* at 1362 (emphasis added). " 'In other words,' Aylus explained, 'the challenged claims require selectively invoking the CP logic and/or CPP logic based on whether the MS and/or MR can communicate with the UE through the local network," and "***this is a key aspect of the claimed invention, which addresses an important objective, namely***: reducing the use of expensive bandwidth (e.g., wide area cellular networks) by implementing a least-cost routing decision about how to negotiate media content delivery that utilizes the less costly local wireless network whenever possible." *Id.*

In *Huawei Techs. Co. v. T-Mobile US, Inc.*, No. 2:16-CV- 00052-JRG-RSP, 2017 U.S. Dist. LEXIS 161488 (E.D. Tex. Sept. 9, 2017), the statements that amounted to a clear and unmistakable disclaimer are, for example, when Patent Owner argued that "Petitioners' proposed

combination fails to provide 'updating, by the core network user plane anchor, a corresponding PDP context,' ***as required by Claim 1 and the similar limitations in the other independent claims***." *Id.* at *5 (emphasis added). Additionally, the patent owner repeatedly characterized the claim scope by making assertions such as: "***Independent Claim 1 expressly requires*** the step of 'updating, by the core network user plane anchor [e.g. GGSN], a corresponding PDP context according to the update PDP context request.' '339 Patent, cl. 1. Accordingly, instead of marking the PDP context as invalid and releasing the information or resources allocated to the user, ***claim 1 requires*** communications for the user to be reestablished with a preserved PDP context. ***Likewise, each challenged independent claim similarly requires*** that the GGSN not mark the PDP context as invalid in response to an error indication received from an access network device (e.g. from an RNC)." *Id.* at *6. The patent owner then went on to summarize the invention: "***In the claims of the '339 Patent,*** that recovery involves updating by the core network user plane anchor a corresponding PDP according to an update PDP request. ***In other words, the claimed technique includes*** the GGSN updating its local PDP context that it has not marked as invalid/unusable." *Id.* at *6-7.

Accordingly, such are the types of statements that amount to a clear and unmistakable disclaimer of claim scope.

In comparison, the closest statements made by Patent Owner in IPR 2023-00835 are as follows:

- "Petitioner has failed to show a modulator in either of its red boxes. Neither the 'encoder' nor the 'pre-distorter' is called a modulator in the specification [of the prior art reference]." (Dkt. 204-2 at 19.)

- "Petitioner's expert admits that encoding and modulation are separate and distinct techniques in the art. . . . Despite these differences, Petitioner confuses modulation and encoding in its argument." (*Id.* at 19-20.)
- "Vrazel's encoder performs Q-grey encoding, not modulation . . . . neither Petitioner nor its expert explain how Vrazel's description of encoding (and reference to an 'encoder') is also a reference to modulation by a modulator." (*Id.* at 20.)
- "Petitioner and its expert have also failed to demonstrate how a pre-distorter is a modulator . . . . There is no reference to modulation in Figure 10. The variation of the pre-distortion circuit in Fig. 12 uses integrators ∫, but still no modulator." (*Id.* at 21-22.)

As shown, each of Patent Owner's statements are about challenging the sufficiency of Petitioner's evidence, pointing out flaws in Petitioner's expert declaration, and pointing out deficiencies in the prior art reference. Unlike the cited cases, Patent Owner did not make any affirmative statements limiting the scope of the patent claims. The quotes Defendant relies upon on page 4 of its Supplemental Response (Dkt. 204) are all summaries of Patent Owner's arguments. Even then, the statements are written as directed to the prior art and arguments in the Petition rather than defining what the patent claims require.

The Court accordingly rejects Defendants' added limitation of "where the converting is not encoding or pre-distortion" and "wherein the m-ary modulator is neither an encoder nor a predistorter." With the limitation removed, Defendants' construction is identical to the plain claim language. Therefore, **no construction is necessary for these terms**.

V. DISPUTED TERMS IN THE '754 PATENT

The '754 patent is titled "System and Method for Pluggable Optical Modules for Passive Optical Networks," and the Abstract reads as follows:

> An optical local area network includes a passive optical distribution fabric interconnecting a plurality of nodes including a first node and a plurality of remaining nodes, a hub that includes the first node and a control module, and a client network adapter coupled to each of the remaining nodes for responding to the control module. The control module controls timing for each of the client network adapters to transmit signals over the passive optical distribution fabric and distribution of signals to each of the nodes.

The '754 patent is only asserted against the Fujitsu and Nokia defendants.

4. "Control Module" Terms ('754 Patent, Claims 1, 3-4, 8-14, 18, 20-21, 25-28)

This disputed term encompasses nine similar phrases where the term "control module" appears. As to each phrase, Plaintiff contends it is not subject to means-plus-function claiming pursuant to 35 U.S.C. § 112, ¶ 6 whereas Defendants contend it is subject to means-plus-function claiming. If the phrase is determined to be subject to § 112, ¶ 6, the parties largely agree upon the recited functions, with the exception of claim 11, as shown in the table below. However, the disagreement then hinges upon whether there is corresponding structure disclosed in the specification that performs the recited function. Plaintiff identifies the corresponding structure as (1) the NC Engine and (2) the Discrete Chip Device, whereas Defendants argue the term should be found indefinite for lack of corresponding structure. The parties' proposed constructions are summarized as follows:

Claim Phrase	Plaintiff's Construction	Defendants' Construction
For each of the "control module" terms	Not subject to § 112(6). Alternatively, if subject to §112(6), to perform the recited function below with the corresponding structure: 1. NC Engine 128 2. Discrete Chip Device 1408	Means-Plus-Function, subject to § 112, ¶ 6, to perform the recited function below and indefinite for lack of corresponding structure
"a control module electrically coupled to the bi-directional interface block and	**<u>Recited Function:</u>** receive from the head end of the passive optical network	**<u>Recited Function:</u>** [same]

configured to receive from the head end of the passive optical network data communications representing one or more start times for transmitting data communications to the head end of the passive optical network and configured to transmit the data communications to the head end of the passive optical network responsive to the start times" '754 patent, claim 1	data communications representing one or more start times for transmitting data communications to the head end of the passive optical network and configured to transmit the data communications to the head end of the passive optical network responsive to the start times	
"the control module is configured to receive from the head end of the passive optical network data communications representing one or more end times for transmitting data communications to the head end of the passive optical network and the control module is configured to end transmissions to the head end of the passive optical network response to the end times" '754 patent, claim 3	**Recited Function:** receive from the head end of the passive optical network data communications representing one or more end times for transmitting data communications to the head end of the passive optical network and the control module is configured to end transmissions to the head end of the passive optical network response to the end times	**Recited Function:** [same]
"the control module is configured to receive from the head end of the passive optical network data communications representing one or more lengths of times respectively to the start times for transmitting data communications to the head end of the passive optical network and the control	**Recited Function:** receive from the head end of the passive optical network data communications representing one or more lengths of times respectively to the start times for transmitting data communications to the head end of the passive optical network; end transmissions to	**Recited Function:** [same][3]

[3] Although Defendants note that the parties' proposals differ, a comparison of the recited function in Plaintiff's Opening Brief (Dkt. No. 176 at 9) and Defendants' Responsive Brief (Dkt. No. 187 at 12) shows that the respective recited functions are the same.

module is configured to end transmissions to the head end of the passive optical network response to the lengths of times" '754 patent, claim 4	the head end of the passive optical network response to the lengths of times	
". . . the control module is configured to receive from the head end of the passive optical network an assigned network identification address and wherein the assigned network identification address can be used for receiving data addressed to the network client optical transceiver module" '754 patent, claim 9	**Recited Function:** receive from the head end of the passive optical network an assigned network identification address and wherein the assigned network identification address can be used for receiving data addressed to the network client optical transceiver module	**Recited Function:** [same]
"the control module is configured to respond to the head end of the passive optical network responsive to a network operating protocol for new network clients" '754 patent, claim 10	**Recited Function:** respond to the head end of the passive optical network responsive to a network operating protocol for new network clients	**Recited Function:** [same]
"the control module is configured to respond to a response delay message from the head end of the passive optical network, wherein the response delay message is used to determine the delay in responses from the network client optical transceiver module" '754 patent, claim 11	**Recited Function:** respond to a response delay message from the head end of the passive optical network	**Recited Function:** respond to a response delay message from the head end of the passive optical network, wherein the response delay message is used to determine the delay in responses from the network client optical transceiver module
"the control module is configured to align data	**Recited Function:**	**Recited Function:** [same][4]

[4] Although Defendants note that the parties' proposals differ, a comparison of the recited function in Plaintiff's Opening Brief (Dkt. No. 176 at 11) and Defendants' Responsive Brief (Dkt. No. 187 at 13) shows that the respective recited functions are the same.

communication transmissions with the network period of the optical network to account for transmission delays responsive to a response delay process" '754 patent, claim 12	align data communication transmissions with the network period of the optical network to account for transmission delays responsive to a response delay process	
"the control module is configured to adjust the transmitting optical power level responsive to a message received from the head end of the passive optical network" '754 patent, claim 13	**Recited Function:** adjust the transmitting optical power level responsive to a message received from the head end of the passive optical network	**Recited Function:** [same]
"the control module is configured to encapsulate at least a portion of the data received through the electrical network interface port into a payload section of a framing protocol for the passive optical network" '754 patent, claim 14	**Recited Function:** encapsulate at least a portion of the data received through the electrical network interface port into a payload section of a framing protocol for the passive optical network	**Recited Function:** [same]

Plaintiff's position:

Plaintiff contends that "control module" refers to a well-known structure in an optical transceiver, namely a controller, which is the brains of the transceiver and is necessary for controlling the claimed operations of the transceiver. (Dkt. No. 176 at 12.) Plaintiff states the claims make clear the "control module" refers to a controller by connecting it with other important parts of the transceiver such as the optical interface, the electrical interface, and the framing block, which are all typical connections for a controller. (*Id.*) Plaintiff argues the specification confirms this interpretation because it describes the NC Engine 128 as a "control module" and describes how it responds to messages and controls the optical interface, which aligns with the configurations

and characteristics one skilled in the art would expect of a controller in an optical receiver. (*Id.* at 12-13.) Further, the specification discloses another embodiment where the controller is split between a micro-controller 1415 and a Discrete Chip Device 1408, where the basic message handling is performed by micro-controller and the protocol-specific tasks are handled by the Discrete Chip Device. (*Id.* at 13.)

Plaintiff notes the file history is consistent with the knowledge of one skilled in the art as the IPR petitions did not challenge "control module" as lacking structure. (*Id.*) Instead, Plaintiff contends that Defendants' expert, Dr. Tonguz, looked only at the term in a vacuum and opined based on his personal knowledge. (*Id.* at 14.)

Defendants' position:

Defendants contend the "control module" cannot be a microcontroller because the '754 patent identifies it as the NC Engine 128, which is inside of a larger structure called the "network client communications logic and memory (NC-CLM)." (Dkt. 187 at 13-14.) For that reason, although the NC-CLM is structure, Defendants assert the smaller black box inside the larger box does not connote any specific structure. (*Id.*)

Defendants compare the "control module" to the "distributed learning control module" recognized as a nonce term that does not connote sufficiently definite structure in *Williamson v. Citrix Online, LLC*, 792 F.3d 1339, 1350-51 (Fed. Cir. 2015). There, the Federal Circuit found "the word 'module' does not provide any indication of structure because it sets forth the same black box recitation of structure for providing the same specified function as if the term 'means' had been used," and "[t]he prefix 'distributed learning control' does not impart structure into the term 'module.'" *Id.* at 1351. Defendants argue the same reasoning applies here to find "control

module" to be a nonce word equivalent to using "means" such that it is subject to §112, ¶ 6. (Dkt. No. 187 at 14.)

If "control module" is found to be in means-plus-function format, Defendants argue the specification fails to describe sufficient structure. Defendants cite to Dr. Tonguz's opinion that "control module" does not have an established meaning to a person of skill in the art and, according to him, it is unknown whether a "control module" is comprised of physical components or software. (Dkt. No. 187 at 16.) In other words, the specification does not illuminate what is an NC Engine; therefore, it is a black box with no discernable structure. (*Id.* at 17.) Defendants further disagree with Plaintiff that the "Discrete Chip Device 1408" can constitute structure because Dr. Tonguz says that "chip device" is another generic, non-descript term that is not explained in the specification in structural terms. (*Id.* at 17-18.)

Analysis:

35 U.S.C. § 112, ¶ 6 provides: "An element in a claim for a combination may be expressed as a means or step for performing a specified function without the recital of structure, material, or acts in support thereof, and such claim shall be construed to cover the corresponding structure, material, or acts described in the specification and equivalents thereof." "In exchange for using this form of claiming, the patent specification must disclose with sufficient particularity the corresponding structure for performing the claimed function and clearly link that structure to the function." *Triton Tech of Tex., LLC v. Nintendo of Am., Inc.*, 753 F.3d 1375, 1378 (Fed. Cir. 2014).

"[T]he failure to use the word 'means' . . . creates a rebuttable presumption . . . that § 112, para. 6 does not apply." *Williamson v. Citrix Online LLC*, 792 F.3d 1339, 1348 (Fed. Cir. 2015) (citations and internal quotation marks omitted). "When a claim term lacks the word 'means,' the presumption can be overcome and § 112, para. 6 will apply if the challenger demonstrates that the

claim term fails to recite sufficiently definite structure or else recites function without reciting sufficient structure for performing that function." *Id.* at 1349 (citations and internal quotation marks omitted). In *Williamson*, the claim limitation "distributed learning control module for receiving communications transmitted between the presenter and the audience member computer systems and for relaying the communications to an intended receiving computer system and for coordinating the operation of the streaming data module" was found to be written in a means-plus-function format essentially substituting the word "module" for "means" and reciting three functions to be performed. *Id.* at 1350. In that usage, the word "module" was found to be a nonce word akin to using "means."

"Merely because a named element of a patent claim is followed by the word 'means,' however, does not automatically make that element a "means-plus-function" element under 35 U.S.C. § 112, ¶ 6," because we cannot "blindly elevate[] form over substance." *Id.* at 1348. Instead, "the essential inquiry is not merely the presence or absence of the word 'means' but whether the words of the claim are understood by persons of ordinary skill in the art to have a sufficiently definite meaning as the name for structure." *Id.*

Here, the term "control module" does not use the word "means" so a rebuttable presumption exists that § 112, ¶ 6 does not apply. Nor is the claim element written in means-plus-function formatting. For example, claim 1 of the '754 patent reads as follows, with the disputed limitation in bold:

> 1. A network client optical transceiver module for a passive optical network, the passive optical network having one or more passive optical splitters for coupling the network client optical transceiver module over one or more optical fibers to the head end of the passive optical network and the network client optical transceiver module having a pluggable form factor and configured to removably couple to an optical module port of a switch or router, the network client optical transceiver module comprising:

an optical port configured to optically couple to one or more optical fibers of the passive optical network having one or more passive optical splitters;

a bi-directional optical interface block optically coupled to the optical port and configured to perform optical-to-electrical and electrical-to-optical signal conversion;

a control module electrically coupled to the bi-directional optical interface block and configured to receive from the head end of the passive optical network data communications representing one or more start times for transmitting data communications to the head end of the passive optical network and configured to transmit the data communications to the head end of the passive optical network responsive to the start times; and

an electrical network interface port electrically coupled to the control module and for electrically coupling into the optical module port of the switch or router and for communicating with the switch or router; whereby

the network client optical transceiver module is configured to optically communicate with the head end of the passive optical network responsive to start times for transmitting data communications to the head end of the passive optical network and the network client optical transceiver module is configured to removably couple to the optical module port of the switch or router and electrically communicate with the switch or router.

Claim 8 in the '754 patent adds an additional limitation, as follows:

8. The network client optical transceiver module of claim 1, wherein the network client optical transceiver module includes a framing block electrically coupled to the bi-directional optical interface block and **the control module** is electrically coupled to the framing block and wherein the framing block is configured for framing data communications for transmission in accordance with a framing protocol for the passive optical network.

The words in claim 1 describe a "network client optical transceiver module" having "an optical port," "a bi-directional optical interface block," "a control module," and "an electrical network interface port" that is configured to "optically communicate" with "a passive optical network" and be "removably couple[d] to the optical module port of the switch or router and electrically communicate with the switch or router." The "control module" is one component of the optical transceiver that is "electrically coupled to the bi-directional optical interface block" and from

which "an electrical network interface port [is] electrically coupled to." Dependent claim 8 goes further to add that "the control module is electrically coupled to the framing block" that frames "data communications for transmission in accordance with a framing protocol for the passive optical network." Although an aspect of the claim language is functional in that these components are "configured to" receive or transmit information a certain way, this claim element is not purely functional claiming. *Ergo Licensing, LLC v. CareFusion 303, Inc.*, 673 F.3d 1361, 1364 (Fed. Cir. 2012) ("Requiring disclosure of an algorithm properly defines the scope of the claim and prevents pure functional claiming.").

Accordingly, "control module" read in the context of the complete claim language recites structure in support thereof and is not subject to § 112, ¶ 6. And on balance, the Court finds the plaintiff's expert, Dr. Baker, to be more credible here. Dr. Baker stated that a controller is a known structure in an optical transceiver (Dkt. 176-41 at ¶70) and Defendants do not argue otherwise. As Dr. Baker explained, the various parts of the transceiver such as the optical interface, the electrical interface, and the framing block are typical for a controller. (*Id.* at ¶71.) Moreover, the configurations described in the claims recite additional characteristics of the "control module" that a person of skill in the art would associate with a controller in an optical transceiver, such as protocol-specific messaging with a head end (claims 1, 3, 4, 9, 10, 11, 12, 13, and 14), and protocol-specific tasks such as configuring the start and end times for data transmissions with the head end in claims 1 and 3, or power level adjustments in claim 13 of the '754 patent. (*Id.* at ¶72.)

The specification of the '754 patent also supports the reasoning that the words of the claim are understood by persons of skill in the art to connote structure. The "Background of the Invention" section teaches that optical modules are well known in the art in that they "can be purchased off the shelf," are built using a "highly integrated packaging approach," contain "hi

speed integrated circuits," and that the invention increases the "number of components" in an optical transceiver module. '754 patent at 1:42-2:20. This comports with Dr. Baker's opinion that a person of skill in the art would understand that "control module" refers to a specific component (*e.g.*, a controller)." (Dkt. 176-41 at ¶73-75.)

Further, the specification aligns with the claim language. The specification identifies NC Engine 128 as "a control module that performs various functions associated with an NCA 104," including "responding to messages from the NM 100" and controlling the optical interface. '754 patent at 7:30-43, 63-65. These are consistent with the operations described in the claims. And FIG. 1 shows the NC Engine 128 as connected to the electrical interface, the optical interface, and the framer:

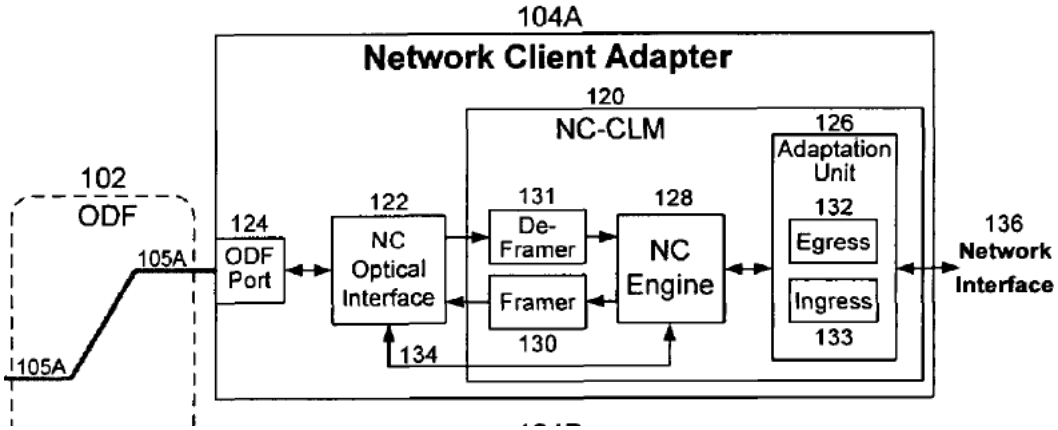

FIG. 1

The alternative embodiment in FIG. 14, below, shows another configuration of the "control module" having a Discrete Chip Device 1408 and a microcontroller 1415. In particular, the microcontroller is described as "enable[ing] the optical module 1400 to communicate to an external intelligence the capabilities of the optical module 1400 as well as receive configuration commands from the external intelligence." '754 patent, Col. 15:44-47. This also aligns with the characteristics in the claim language.

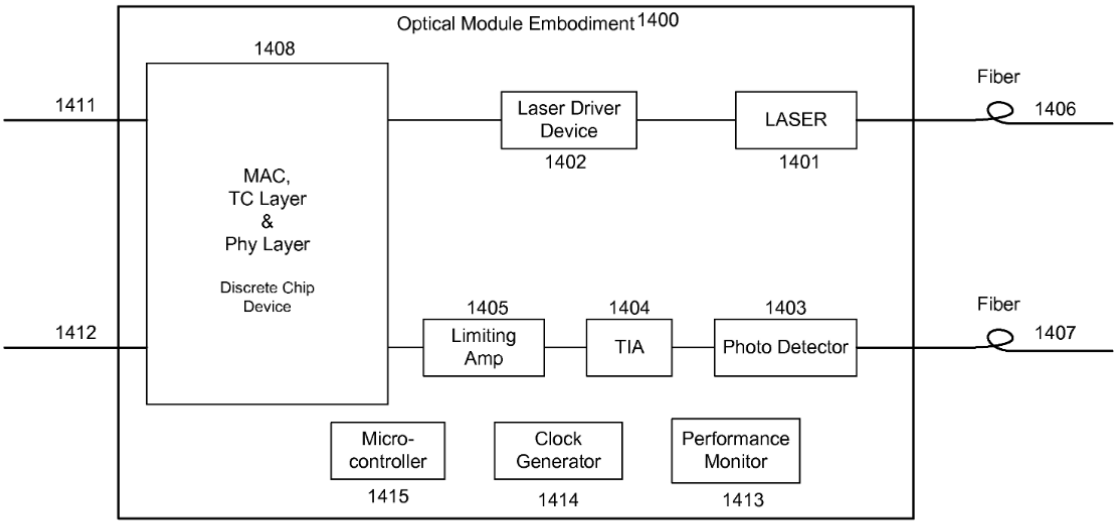

FIG. 14

That "control module" in this context is understood by persons of skill in the art to connote structure is further supported by Defendants' own prior position. In the IPR petition, Nokia and its expert had no difficulty applying the "control module" limitation to a "control and logic unit (CLU)" in a prior art reference. (*See, e.g.*, Dkt. 176-28 at 27-31.)

Accordingly, Defendants have not met their burden to show that the claim "fails to recite sufficiently definite structure or else recites function without reciting sufficient structure for performing that function." *Williamson*, 792 F.3d at 1349. The Court therefore finds that "control module" **is not subject to means-plus-function claiming** and is instead a class of microcontroller, controller, or similar structure within an optical transceiver**.**

5. "framing block," ('754 patent, claim 8)

Claim Phrase	Plaintiff's Construction	Defendants' Construction
"a framing block . . . wherein the framing block is configured for framing data communications for transmission in accordance with a framing protocol for the passive optical network"	Not subject to § 112(6). Alternatively, if subject to §112(6), to perform the recited function below with the corresponding structure:	Means-Plus-Function, subject to § 112, ¶ 6 **<u>Recited Function:</u>** [Same]

’754 patent, claim 8	**Recited Function:** framing data communications for transmission in accordance with a framing protocol for the passive optical network **Corresponding Structure:** 1. Framer 130	**Corresponding Structure:** indefinite for lack of corresponding structure

Plaintiff’s position:

Plaintiff contends that “framing block” refers to a well-known structure called a framer that is responsible for framing data according to a protocol described in detail in the specification. (Dkt. 176 at 16.) Plaintiff’s expert, Dr. Baker, opines that a person of ordinary skill in the art would understand that optical transceiver modules have a framer that is a purpose-built hardware component designed to be integrated into an optical module to frame (or deframe) the data in a transmission. (Ex. 176-41 at ¶140.) Plaintiff further points to Nokia’s IPR where its expert had no trouble understanding that the “framing block” refers to structure and identified the known structure of a “framer” in the prior art. (Dkt. 176 at 16-17.)

Defendants’ position:

Defendants rely upon Dr. Tonguz’s opinion that a person of ordinary skill in the art would not understand the meaning of the phrase “framing block” because the language is equivalent to a black box that is a component to a larger device. (Dkt. No. 187 at 20.) Therefore, Defendants contend this is a means-plus-function term. The term “framing block” does not appear in the specification and the Framer 130 in the specification does not provide sufficient structure. (*Id.* at 20-21.) To Dr. Tonguz, “[i]t is not clear whether the ‘framing block” is Framer 130 or a combination of both Framer 130 and Deframer 131,” whether it is software, or whether it would

include additional components such as a CPU or microcontroller, or a logic and memory." (*Id.*) As the claim language is imprecise and there is no support in the specification, Defendants argue the term "framing block" is indefinite.

Analysis:

A similar analysis to that in the preceding "control module" discussion applies here. Again, the term "framing block" does not use the word "means" so a rebuttable presumption exists that § 112, ¶ 6 does not apply. Nor is the claim element written in means-plus-function formatting as the words of claim 8 describe "a framing block" in an optical transceiver module that is "electrically coupled to the bi-directional optical interface block and [to] the control module." Although an aspect of the claim language is functional in that the "framing block" is "configured for framing data communications for transmission in accordance with a framing protocol for the passive optical network," this claim element is not purely functional claiming. According to Dr. Baker, framing data communication for transmission in accordance with a framing protocol is a typical functionality for a framer. (Dkt. No. 176-41 at ¶ 142.)

Moreover, the specification describes a framer throughout, including describing a "framer 130 block," along with a detailed explanation of a framing protocol. *E.g.*, '754 patent at Figs. 1, 2-3B, 6A-10, 2:8-10, 6:48-7:7, 7:33-8:7, 8:41-10:14. The specification describes the claim element by explaining that "Framer 130 frames outgoing data from the NC Engine 128 in accordance with a framing protocol that is in-use." *Id.*, col. 7:39-41. The "Background of the Invention" section teaches that optical modules are well known in the art in that they "can be purchased off the shelf," is built using a "highly integrated packaging approach," contains "hi speed integrated circuits," and that the invention increases the "number of components" in an optical transceiver module. *Id.*, col. 1:42-2:20. The specification goes on to say that "[o]ptical modules are ultimately connected

with various interfaces to Framers . . . as shown in FIG. 12." *Id.*, col. 2:8-10. This comports with Dr. Baker's opinion that a person of skill in the art would understand that "framing block" refers to a component commonly known in the art as a framer. (Dkt. No. 176-41 at ¶144.) Moreover, during oral argument Defendants conceded that "framer block" and framing block" have the same functionality.

That "framing block" in this context is understood by persons of skill in the art to connote structure is further supported by Defendants' own prior position. In the IPR petition, Nokia and its expert identified the "framing block" as a framer in the prior art. (*See, e.g.*, Dkt. No. 176-28 at 10, 40-41.)

Accordingly, Defendants have not met their burden to show that the claim "fails to recite sufficiently definite structure or else recites function without reciting sufficient structure for performing that function." *Williamson,* 792 F.3d at 1349. The Court therefore finds that "framing block" **is not subject to means-plus-function claiming** and is instead a framer within an optical transceiver**.**

6. "bi-directional optical interface block," ('754 patent, claim 1)

Claim Phrase	Plaintiff's Construction	Defendants' Construction
"a bi-directional optical interface block optically coupled to the optical port and configured to perform optical-to-electrical and electrical-to-optical signal conversion" '754 patent, claim 1	Not subject to § 112(6). Alternatively, if subject to §112(6), to perform the recited function below with the corresponding structure: **Recited Function:** perform optical-to-electrical and electrical-to- optical signal conversion **Corresponding Structure:** 1. A laser and photo detector	Means-Plus-Function, subject to § 112, ¶ 6 **Recited Function:** [Same] **Corresponding Structure:** indefinite for lack of corresponding structure

	2. NC Optical Interface 122	

Plaintiff's position:

Plaintiff contends that a "bi-directional optical interface block" should not be subject to means-plus-function interpretation because it is an expected component within an optical transceiver with known structure; namely, the optics that typically perform the optical-to-electrical and electrical-to-optical conversions. (Dkt. No. 176 at 18.) Also called an optical sub-assembly, they can be receiving, transmitting, or bi-directional as claimed here. (*Id.*) Plaintiffs point to the specification as identifying the common components of a bi-directional optical sub-assembly as including a laser and photo detector as well as disclosing the NC Optical Interface 122 as performing the function of optical-to-electrical and electrical-to-optical signal conversion. (*Id.*) In addition, Plaintiff argues that Nokia had no problem understanding this term in its IPR petition by arguing the prior art discloses an "optical interface" and "laser transmitter." (*Id.*)

Defendants' position:

Defendants contend this term is a means-plus-function term because a person of ordinary skill in the art would not understand what structure is intended by "a bi-directional optical interface block" and the specification fails to disclose any corresponding structure. (Dkt. No. 187 at 22.) Defendants rely upon Dr. Tonguz's opinion that the claim term is equivalent to a black box, a nonce word, that results in confusion without additional information from the specification. (*Id.*) In particular, Dr. Tonguz did not find the terms "a bi-directional optical interface block" or "optical interface block" in the specification and accordingly concludes there is no corresponding structure. (*Id.* at 23.) According to him, the laser and photo detectors identified by Plaintiff are merely components of the claimed function and cannot constitute structure, nor does the NC Optical

Interface 122 because no structure is described within it aside from the ODF port 124. (*Id.*) For those reasons, Defendants urge this term be found indefinite.

Analysis:

A similar analysis to that in the preceding "control module" and "framing block" discussions also applies here. As the term "bi-directional optical interface block" does not use the word "means," a rebuttable presumption exists that § 112, ¶ 6 does not apply. And the claim element is not written in a means-plus-function format as the words of claim 1 describe "a bi-directional optical interface block" in an optical transceiver module that is "optically coupled to the optical port" and "electrically coupled" to a control module. Claim 18 further describes an "optical transceiver module having an optical interface block optically coupled to the optical port." Although an aspect of the claim language is functional in that the "bi-directional optical interface block" is "configured to perform optical-to-electrical and electrical-to-optical signal conversion," this claim element is not purely functional claiming. As Dr. Baker explained, a person of skill in the art would understand after reviewing the claims and specification that the "bi-directional optical interface block" refers to a well-known structure used in optical modules also called the bi-directional optical sub-assembly that typically performs optical-to-electrical and electrical-to-optical conversion. (Dkt. 176-41 at ¶ 161-164.)

The specification supports this interpretation. The "Background of the Invention" section teaches that typical optical modules known in the art contain "optical-electrical and electrical-optical (o-e/e-o) components 1204, such as a laser and photo detector." '754 patent, col. 1:54-2:2. A similar disclosure is made regarding the embodiment disclosed in Figure 14: "The optical module 1400 contains the optical-electrical/electrical-optical components such as a laser 1401 and a photo detector 1403." *Id.*, col. 15:5-9. The specification also teaches that NC Optical Interface

122 performs the function of optical-to-electrical and electrical-to-optical signal conversion "for example, by modulating a laser (not shown) included in the NC Optical Interface 122 and transmitting the laser output to the ODF port 124." *Id.* at 7:65-8. Figure 1, *supra*, shows the structural placement of the NC Optical Interface 122 in connection with the ODF port, the NC Engine, and other components within the optical module.

That the "bi-directional optical interface block" is understood by persons of skill in the art to refer to a well-known structure used in optical modules is supported by Nokia's IPR position. There Nokia and its expert identified an "optical interface" and "laser transmitter" as meeting this claim limitation. Dkt. No. 176-29 at ¶¶ 93, 127-132.

Accordingly, Defendants have not met their burden to show that the claim "fails to recite sufficiently definite structure or else recites function without reciting sufficient structure for performing that function." *Williamson,* 792 F.3d at 1349. The Court therefore finds that "bi-directional optical interface block" **is not subject to means-plus-function claiming** and is instead an optical interface having a laser and photo detector within an optical transceiver**.**

VI. DISPUTED TERMS IN THE '508 PATENT

The '508 patent is titled "Augmenting Passive Optical Networks," and the Abstract reads as follows:

> Passive optical networks have optical budget loss limitations that affect the ability of a Service Provider to serve a limited number of clients over a limited range. The deployment of passive optical networks is constrained by potential physical rights of way issues. A method and system for augmenting communication links of a passive optical network are disclosed which utilize radio frequency communication enabling an increase in the number of clients on the network as well as increasing the reach or range of the network while potentially eliminating physical rights of way issues.

The '508 patent is only asserted against AT&T.

7. "converter of optical signals and radio signals," ('508 Patent, claims 1 and 7)

Plaintiff's Construction	AT&T's Construction
No construction necessary	converter that can use an optical communication protocol for both optical links and radio frequency links

Plaintiff's position:

Plaintiff urges no construction is needed for the phrase "converter of optical signals and radio signals" because it is written in plain terms easily understood by a jury. (Dkt. No. 176 at 20.) Plaintiff states the claims themselves impose requirements on the converter to perform convergence layer or media access controller functions and frequency conversions, without additional limitations. (*Id.*) And this is consistent with the specification describing the "converter" broadly by both disclosing embodiments where minimal conversion is necessary (*e.g.*, '508 patent, col. 5:4-28) as well as embodiments where higher-level conversions, such as transmission convergence layer or MAC processing, are performed (*e.g., id.*, col. 8:4-41). (Dkt. No. 176 at 20.) Plaintiff argues that claims 1 and 7, by their wording, require these latter more complex conversion functionalities.

Plaintiff contends that AT&T's proposed construction purports to import the limitations of a single embodiment into the claims by requiring the use of the optical communication protocol for both optical links and radio frequency links and this is improper. (Dkt. No. 176 at 22.) There is no clear and unmistakable disclaimer of claim scope and, Plaintiff argues, the specification explains that such a usage is merely a possibility and not a requirement. (*Id.*)

Through its expert, Dr. Baker, Plaintiff explains that the claim language necessarily requires multiple conversions such as frequency conversions at the physical layer because signals in the optical protocols and wireless protocols operate at different frequencies. (*Id.* at 23.) Plaintiff

states the claim also requires the converter to perform transmission convergence or media access controller functions to convert signal formatting between protocols. (*Id.* at 23-24.) As optical protocols are physically designed to use light to transmit data, Plaintiff says that there are no optical communication protocols that can support both the optical and wireless transmission methods. (*Id.* at 24.) Moreover, while an "optical communication protocol" includes both requirements on the physical characteristics of a signal and as well as the content, size, configuration, and framing of the signal (data), Plaintiff argues that a person of ordinary skill would understand that a "protocol" refers to all aspects of communication. (*Id.* at 25.)

AT&T's position:

AT&T contends the problem the '508 patent set out to solve in the prior art is having to use converters that require multiple protocol conversions between optical to wireless back to optical where every conversion increases expense. (Dkt. 187 at 24.) The inventor then came up with the solution by disclosing a converter that (a) continues to perform necessary *physical* conversions (e.g., modulation, power, etc.) from optical to wireless, which the patent refers to as "link conversion," but (b) forgoes conversion from optical to wireless for all other aspects of communication (e.g., coding, framing, control signaling), which the patent refers to as the "protocol conversion." (*Id.* at 24-25.)

AT&T asserts that the specification is consistent in describing this solution in the same way across all the embodiments. (*Id.* at 25-26.) In particular, AT&T notes that the specification made no reference to using framing, overhead signaling, and the like from an RF protocol over the RF link. (*Id.*) Rather, the specification connects the solution to the desired benefit by stating that the "use [of] an RF link to extend" an optical network is reached "***without necessarily requiring***

the expense or complexity of stages to perform such functions as frame synchronization, decoding or re-coding of signals ***in accordance with an RF protocol***." (*Id.* at 26.)

AT&T argues that these and similar disclosures in the '508 patent amount to a "clear" implicit disavowal of claim scope. Accordingly, AT&T urges for converters not employing an optical protocol over the RF link to be read out of claims 1 and 7. (Dkt. No. 187 at 27.)

Analysis:

Claim terms are normally given their ordinary and customary meaning, as understood by persons of ordinary skill in the art, in view of the entire patent including the specification and prosecution history. *Phillips*, 415 F.3d at 1313 (Fed. Cir. 2005). "But where the inventor has clearly set forth a different definition of a claim term, or has manifested that the invention does or does not include a particular aspect . . . the inventor has 'disavowed' claim scope." *Techtronic Indus. Co. v. ITC*, 944 F.3d 901, 907 (Fed. Cir. 2019). "A disavowal must be clear, but it need not be explicit." *Id.* A disavowal "may be inferred from clear limiting descriptions of the invention in the specification or prosecution history," or "by distinguishing the claimed invention over the prior art." *Id.* (citations and internal quotations omitted). The ultimate "purpose of claim construction is to 'capture the scope of the actual invention,' and whether 'the embodiments . . . define the outer limits of the claim term,' or are 'merely . . . exemplary in nature,' is a question that must be determined 'in the context of the particular patent.' " *Id.* (citing *Philips*, 415 F.3d at 1323-24); *see also SciMed Life Sys., Inc. v. Advanced Cardiovascular Sys., Inc.*, 242 F.3d 1337, 1341 (Fed. Cir. 2001) ("Where the specification makes clear that the invention does not include a particular feature, that feature is deemed to be outside the reach of the claims of the patent, even though the language of the claims, read without reference to the specification, might be considered broad enough to encompass the feature in question.").

Here, the "Background of the Invention" section defines the problem: "[F]or Service Providers of broadband service . . . [the] requirements to connect different types of communication equipment using multiple protocol conversions and communication link conversions," is "a large source of expense." Col. 1:36-42. The three communication segments (fiber-wireless-fiber) already exists to navigate physical right of ways, but each segment presents "multiple protocol and communication link conversions." Col. 1:43-46. First at the network core, a SONET/SDH fiber may be connected to ATM communication equipment so line cards within the ATM communication equipment may convert traffic to other protocols such as Ethernet, then the fiber links are connected to other communication equipment that perform wireless base-station functions that may include another protocol conversion to support the broadband wireless access (BWA) protocol, then a wireless terminal terminates the BWA protocol and converts it back to an Ethernet or SONET/SDH protocol at the premises. Col. 1:47-60. Each such protocol conversion increases a service provider's expense of a fiber network. Col. 65-67. Therefore, there is a need to "augment the number of clients, network area of coverage or circumvent physical rights of way obstacles when Service Providers deploy passive optical network fiber links in a manner that minimizes the number of protocol conversions." Col. 2:23-27.

The proposed solution, therefore, is to use a converter 150 that uses an optical communication protocol without requiring "conversion of the received signals (other than optical-to-radio and radio-to-optical)." Col. 5:8-12. In particular, the converter can "use its optical communication protocol for both optical links and non-optical links that is comprised of radio frequency links" and thereby "use an RF link to extend an ODN without necessarily requiring the expense or complexity of stages to perform such functions as frame synchronization, decoding or re-coding of signals in accordance with an RF protocol." Col. 5:15-21. Thus, the electrical signals

associated with the optical signals and the electrical signals associated with the RF signals "can carry the same information" while "payload data can remain coded according to a coding technique that is optimized for optical links." Col. 5:22-26. Additionally, "[o]verhead data associated with an optical communication protocol (e.g., data link layer framing overhead) can remain the same." Col. 5:26-28. Furthermore, "[t]he electrical signal of the associated radio frequency signal and optical signal can also represent a same baseband signal with a same sequence of modulation symbols without requiring reformatting." Col. 5:29-32.

The stated problem of needing to "minimize[] the number of protocol conversions" across a fiber-wireless-fiber communication pathway combined with the repeated solution of a converter 150 that uses an optical communication protocol without requiring "conversion," "frame synchronization, decoding or re-coding of signals," while "payload data" and "overhead data" remains the same, points to a clear limiting description of the invention in the specification. Plaintiff presents nothing to the contrary. During the hearing, Plaintiff pointed to discussions of converters 150A-H in the specification, arguing that all of them are silent as to using an optical communication protocol on both links, and thereby inferring that such a use is not the basis of the invention. However, by the way they are identified, 150A-H appear to be subcategories of the disclosed "converter 150." And according to the specification, "[c]onverter 150 uses an optical communication protocol (e.g., a PON communication protocol), and no conversion of the received signals (other than optical-to-radio and radio-to-optical) is required" such that "a PON embodiment in accordance with the invention is able to use its optical communication protocol for both optical links and non-optical links that is comprised of radio frequency links." Col. 5:5-15. Therefore, the subcategories of converters 150A-H should already include this feature. Each of the recited embodiments is consistent with this disclosure. And Plaintiff does not identify

anything in the specification that describes applying an RF protocol beyond the physical layer. Moreover, Dr. Baker testified that he is not aware of any disclosure in the '508 patent that discloses data conversions such as framing, overhead signaling, or the like from an RF protocol over the RF link. (Dkt. No. 187-12 at 150:17-23.)

Reading the claims in view of the entire patent where the solution addresses the identified problem and is applied consistently and repetitively, the most reasonable conclusion is that the inventor has set forth a different definition of the claim term. As a result, although the ordinary meaning of "converter" is typically read more broadly, in this instance the inventor made clear that it does not convert the received signals beyond the physical layer. The permissive language that Plaintiff points to in the specification (saying the described conversion is not "necessarily requir[ed]" and that conversion of data coding is "not necessary" but also not expressly excluded) is not persuasive against the weight of the entirety of the disclosure.

Thus,"converter of optical signals and radio signals," means **"converter that can use an optical communication protocol for both optical links and radio frequency links."**

VII. CONCLUSION

The Court adopts the constructions set forth in this opinion for the disputed terms of the patents-in-suit. The parties are ordered that they may not refer, directly or indirectly, to each other's claim construction positions in the presence of the jury. Likewise, the parties are ordered to refrain from mentioning any portion of this opinion, other than the actual definitions adopted by the Court, in the presence of the jury. Any reference to claim construction proceedings is limited to informing the jury of the definitions adopted by the Court.

SIGNED this 22nd day of December, 2023.

ROY S. PAYNE
UNITED STATES MAGISTRATE JUDGE